REV	DESCRIPTION	BY	DATE

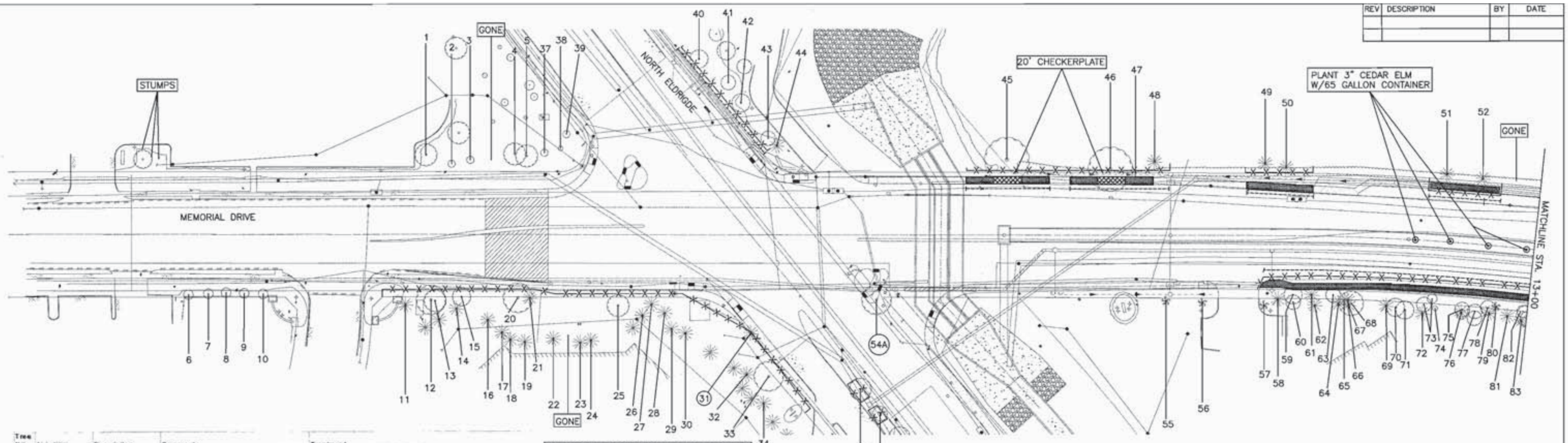

Tree No.	Location	Description	Comments	Treatment
1	15010 Memorial	15" Water Oak	20% dieback., Private tree, will not be impacted	
2	15010 Memorial	4" Crepe Myrtle	Private tree, will not be impacted	
3	15010 Memorial	4" Crepe Myrtle	Private tree, will not be impacted	
4	15010 Memorial	14" Water Oak	70% dieback., Private tree, will not be impacted	
5	15010 Memorial	14" Water Oak	50% dieback., Private tree, will not be impacted	
6	Not available	5" Crepe Myrtle	Not ordinance tree	
7	Not available	5" Crepe Myrtle	Not ordinance tree	
8	Not available	5" Crepe Myrtle	Not ordinance tree	
9	Not available	5" Crepe Myrtle	Not ordinance tree	
10	Not available	5" Crepe Myrtle	Not ordinance tree	
11	Not available	20" Pine	Private tree	Fence
12	Not available	16" Water Oak	Private tree	Fence, Clearance prune
13	Not available	11" Water Oak	Private tree	Fence
14	Not available	14" Pine	Private tree, will not be impacted	
15	Not available	13" Water Oak	Private tree	Fence
16	Not available	12" Pine	Private tree, will not be impacted	
17	Not available	8" Pine	Private tree, will not be impacted	
18	Not available	8" Pine	Private tree, will not be impacted	
19	Not available	8" Pine	Private tree, will not be impacted	
20	Not available	19" Water Oak	Ordinance tree	Fence, Clearance prune
21	Not available	15" Pine	Ordinance tree	Demo-Form-Pour walk without damage to tree roots 1" or larger. Fence
22	Not available	8" Pine	Private tree, will not be impacted	
23	Not available	7" Pine	Private tree, will not be impacted	
24	Not available	7" Pine	Private tree, will not be impacted	
25	Not available	12" Post Oak	Private tree	Fence
26	Not available	6" Pine	Private tree, will not be impacted	
27	Not available	10" Pine	Private tree	Fence
28	Not available	7" Pine	Private tree, will not be impacted	
29	Not available	8" Pine	Private tree, will not be impacted	
30	Not available	8" Pine	Private tree, will not be impacted	
31	Not available	11" Pine	Ordinance tree. Remove for new sidewalk	Remove tree, Provide 11" replacement planting
32	Not available	9" Pine	Private tree, will not be impacted	
33	Not available	15" Willow Oak	Private tree	Fence, Clearance prune
34	Not available	9" Pine	Private tree, will not be impacted	
35	Esplanade	3" Polymorpha Oak	Ordinance tree	Fence
36	Esplanade	3" Polymorpha Oak	Ordinance tree	Fence
37	15010 Memorial	4" Crepe Myrtle	Private tree, will not be impacted	
38	15010 Memorial	9" Lacebark Elm	Girdled by wire, Poor, Private tree, will not be impacted	
39	15010 Memorial	4" Crepe Myrtle	Private tree, will not be impacted	
40	Not available	15" Live Oak	Private tree	Root prune for sidewalk, Fence
41	Not available	13" Live Oak	Private tree	Root prune for sidewalk, Fence
42	Not available	16" Live Oak	Private tree	Root prune for sidewalk, Fence
43	Not available	13" Water Oak	Private tree	Root prune for sidewalk, Fence
44	Not available	15" Pine	Dead, Private tree, will not be impacted	
45	Memorial Oaks Cemetery	25" Post Oak	Private tree	20' checkerplate, Demo-Form-Pour walk without damage to roots 1" or larger, Root prune for street, Fence, Clearance prune
46	Memorial Oaks Cemetery	26" Post Oak	35% dieback., Ordinance tree	20' checkerplate, Demo-Form-Pour walk without damage to roots 1" or larger, Root prune for street, Fence, Clearance prune
47	Memorial Oaks Cemetery	5' Ligustrum Hedge	Not ordinance tree	Remove or prune as needed for new sidewalk
48	Memorial Oaks Cemetery	34" Pine	Private tree	Root prune for street, Demo-Form-Pour walk without damage to tree roots 1" or larger, Fence, Clearance prune
49	Memorial Oaks Cemetery	19" Pine	Private tree	Bore sanitary, Root prune for street, Demo-Form-Pour walk without damage to tree roots 1" or larger, Fence, Clearance prune
50	Memorial Oaks Cemetery	20" Pine	Private tree	Bore sanitary, Root prune for street, Demo-Form-Pour walk without damage to tree roots 1" or larger, Fence, Clearance prune

TREE PRESERVATION PLAN LEGEND

- TREE NUMBER/LOCATION
- TREE TO BE REMOVED
- TREE PROTECTION FENCE
- ROOT PRUNING TRENCH
- REPLACEMENT PLANTING SPECIES AND SIZE/TYPE
- ZERO CUTBACK CURB
- SIDEWALK ON GRADE
- CHECKERPLATE SECTION

Tree No.	Location	Description	Comments	Treatment
51	Memorial Oaks Cemetery	26" Pine	Private tree	Bore sanitary, Root prune for street, Demo-Form-Pour walk without damage to tree roots 1" or larger, Fence, Clearance prune
52	Memorial Oaks Cemetery	12" Pine	Private tree	Bore sanitary, Root prune for street, Demo-Form-Pour walk without damage to tree roots 1" or larger, Fence, Clearance prune
53	Memorial Oaks Cemetery	15" Water Oak	Private tree	Root prune for sanitary, Clearance prune
54	Memorial Oaks Cemetery	13" Pine	Large trunk scar, Private tree	Root prune for sanitary
54A	15015 Memorial	17" Post Oak	Poor, Dieback, Severly pruned by overhead utility, Remove for new turn lanes	Remove tree, No replacement required
55	15015 Memorial	3' Sago	Private tree, will not be impacted	
56	15015 Memorial	3' Sago	Private tree, will not be impacted	
57	15015 Memorial	3' Sago	Private tree, will not be impacted	
58	15015 Memorial	14" Pine	Private tree	Root prune for street, Demo-Form-Pour walk without damage to tree roots 1" or larger, Fence
59	15015 Memorial	15" Water Oak	Ordinance tree	Root prune for street, Demo-Form-Pour walk without damage to tree roots 1" or larger, Fence
60	15015 Memorial	10" Sugarberry	Private tree	Root prune for street, Demo-Form-Pour walk without damage to tree roots 1" or larger, Fence
61	15015 Memorial	13" Pine	Ordinance tree	Root prune for street, Demo-Form-Pour walk without damage to tree roots 1" or larger, Fence
62	15015 Memorial	12" Pine	Private tree	Root prune for street, Demo-Form-Pour walk without damage to tree roots 1" or larger, Fence
63	15015 Memorial	11" Mulberry	Not ordinance tree	Clearance prune
64	15015 Memorial	13" Pine	Private tree	Root prune for street, Demo-Form-Pour walk without damage to tree roots 1" or larger, Fence
65	15015 Memorial	11" Pine	Ordinance tree	Root prune for street, Demo-Form-Pour walk without damage to tree roots 1" or larger, Fence
66	15015 Memorial	9" Pine	Ordinance tree	Root prune for street, Demo-Form-Pour walk without damage to tree roots 1" or larger, Fence
67	15015 Memorial	14" Pine	Private tree	Root prune for street, Demo-Form-Pour walk without damage to tree roots 1" or larger, Fence
68	15015 Memorial	14" Water Oak	Private tree	Root prune for street, Demo-Form-Pour walk without damage to tree roots 1" or larger, Fence, Clearance prune
69	15015 Memorial	15" Pine	Private tree	Root prune for street, Demo-Form-Pour walk without damage to tree roots 1" or larger, Fence
70	15015 Memorial	10" Basswood	Private tree	Root prune for street, Demo-Form-Pour walk without damage to tree roots 1" or larger, Fence, Clearance prune
71	15015 Memorial	14" Water Oak	Private tree	Root prune for street, Demo-Form-Pour walk without damage to tree roots 1" or larger, Fence, Clearance prune
72	15015 Memorial	15" Pine	Private tree	Root prune for street, Demo-Form-Pour walk without damage to tree roots 1" or larger, Fence
73	15015 Memorial	12" Willow Oak	30% dieback, Private tree	Root prune for street, Demo-Form-Pour walk without damage to tree roots 1" or larger, Fence, Clearance prune
74	15015 Memorial	7" Water Oak	Ordinance tree	Root prune for street, Demo-Form-Pour walk without damage to tree roots 1" or larger, Fence
75	15015 Memorial	11" Water Oak	Private tree	Root prune for street, Demo-Form-Pour walk without damage to tree roots 1" or larger, Fence, Clearance prune
76	15015 Memorial	19" Pine	Private tree	Root prune for street, Demo-Form-Pour walk without damage to tree roots 1" or larger, Fence
77	15015 Memorial	12" Arizona Ash	Private tree	Root prune for street, Demo-Form-Pour walk without damage to tree roots 1" or larger, Fence, Clearance prune
78	15015 Memorial	10" Willow Oak	Ordinance tree	Root prune for street, Demo-Form-Pour walk without damage to tree roots 1" or larger, Fence
79	15015 Memorial	15" Pine	Private tree	Root prune for street, Demo-Form-Pour walk without damage to tree roots 1" or larger, Fence
80	15015 Memorial	2' Palm	Not ordinance tree	
81	15015 Memorial	14" Pine	Private tree	Root prune for street, Demo-Form-Pour walk without damage to tree roots 1" or larger, Fence
82	15015 Memorial	9" Water Oak	Ordinance tree	Root prune for street, Demo-Form-Pour walk without damage to tree roots 1" or larger, Fence
83	15015 Memorial	13" Pine	Private tree	Root prune for street, Demo-Form-Pour walk without damage to tree roots 1" or larger, Fence

NOTE:

1. THIS TREE PROTECTION PLAN WAS DEVELOPED WITH INFORMATION PROVIDED BY DESIGN ENGINEER IN DRAWINGS DATED AUGUST 2014. THE PLAN CONSIDERS ALL FITTINGS, VERTICAL OFFSETS AND AREAS OF NECESSARY EXCAVATION. CHANGES MADE TO DESIGN MAY COMPROMISE THE TREE PROTECTION PLAN. REFER TO SPECIFICATIONS 01562 AND 02915. CONDITION OF EACH TREE IS BASED ON VISUAL EVALUATION AT TIME OF DESIGN. CONDITION AND STRUCTURAL INTEGRITY OF EACH TREE IS NOT GUARANTEED BY DESIGNER AT ANY POINT IN THE FUTURE, AS ENVIRONMENTAL AND MAINTENANCE INFLUENCES ON EACH TREE CAN NOT BE DETERMINED BY DESIGNER.
2. THE CONTRACTOR'S ARBORIST WILL MARK LOCATIONS OF THE NEW TREES AND OBTAIN APPROVAL BY THE CITY ENGINEER AND CITY FORESTER BEFORE PURCHASING AND PLANTING TREES.

Texas Department of Transportation ©2013

CivilTech Engineering, Inc.
11821 Telge Road
Cypress, Texas 77429
(281) 304-0200 Fax (281) 304-0210
Registration No. F-382

C.N. Koehl Urban Forestry, Inc.
210 Stone Bush Ct. • Katy, Texas 77493
281-391-0022 ckoehl@koehlurbanforestry.com

APPROVED: Craig N. Koehl 8/18/14

SURVEYED BY: WGC FB No. P-5779

CITY OF HOUSTON
DEPARTMENT OF PUBLIC WORKS AND ENGINEERING

MEMORIAL DRIVE
PAVING AND DRAINAGE IMPROVEMENTS

TREE PROTECTION PLAN
SHEET 1 OF 11

WBS NUMBER
N-000798-0001-4

DRAWING SCALE

CITY OF HOUSTON PM
MICHELLE RANDON, P.E.

53954
CITY DRAWING NUMBER

SHEET No. 187 OF 358

CivilTech Engineering, Inc.
C:\Users\rvedb\Desktop\LUKEY\EDB\CivilTech Memorial\153--CivilTech_Memorial_TP-1.dwg Aug 21, 2014

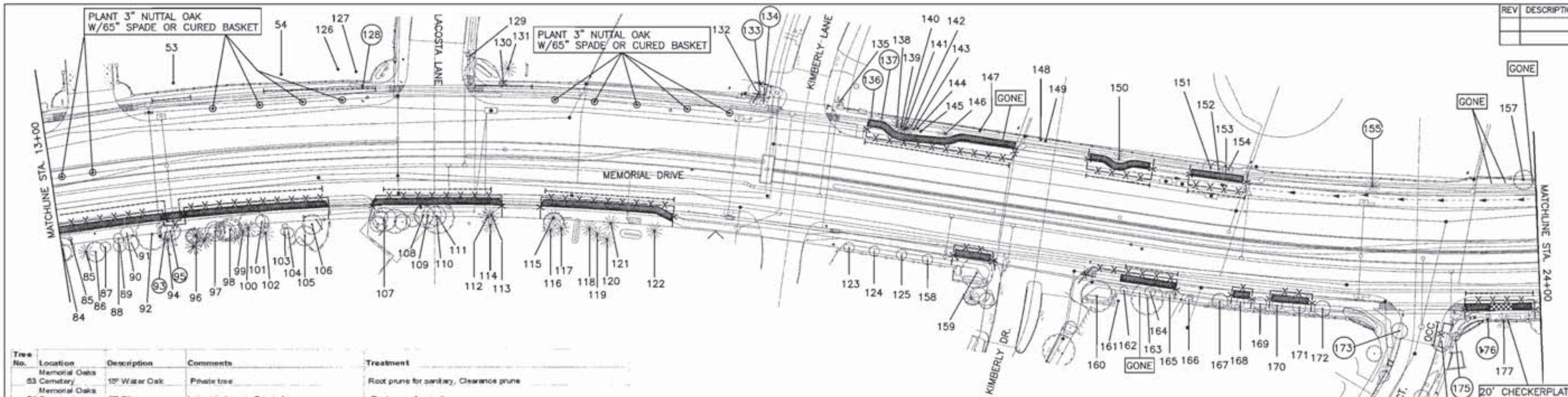

Tree No.	Location	Description	Comments	Treatment
53	Memorial Oaks Cemetery	15" Water Oak	Private tree	Root prune for sanitary, Clearance prune
54	Memorial Oaks Cemetery	13" Pine	Large trunk scar, Private tree	Root prune for sanitary
85	15015 Memorial	15" Pine	Private tree	Root prune for street, Demo-Form-Pour walk without damage to tree roots 1" or larger, Fence
86	15015 Memorial	13" Green Ash	Private tree	Root prune for street, Demo-Form-Pour walk without damage to tree roots 1" or larger, Fence
87	15015 Memorial	8" Water Oak	Private tree	Root prune for street, Demo-Form-Pour walk without damage to tree roots 1" or larger, Fence
88	15015 Memorial	8" Green Ash	Ordinance tree	Root prune for street, Demo-Form-Pour walk without damage to tree roots 1" or larger, Fence
89	15015 Memorial	9" Water Oak	Private tree	Root prune for street, Demo-Form-Pour walk without damage to tree roots 1" or larger, Fence
90	15015 Memorial	9" Basswood	Ordinance tree	Root prune for street, Demo-Form-Pour walk without damage to tree roots 1" or larger, Fence
91	15015 Memorial	10" American Elm	Private tree	Root prune for street, Demo-Form-Pour walk without damage to tree roots 1" or larger, Fence
92	15015 Memorial	12" Water Oak	Private tree	Root prune for street, Demo-Form-Pour walk without damage to tree roots 1" or larger, Fence, Clearance prune
93	15015 Memorial	11" Water Oak	Ordinance tree, Remove for storm manhole	Remove tree, Provide 11" in replacement
94	15015 Memorial	16" Pine	Private tree	Root prune for street and storm manhole, Demo-Form-Pour walk without damage to tree roots 1" or larger, Fence
95	15015 Memorial	13" Water Oak	Ordinance tree, Remove for storm manhole	Remove tree, Provide 13" in replacement
96	15015 Memorial	14" Pine	Private tree	Root prune for street, Demo-Form-Pour walk without damage to tree roots 1" or larger, Fence
97	15015 Memorial	12" Green Ash	Private tree	Root prune for street, Demo-Form-Pour walk without damage to tree roots 1" or larger, Fence, Clearance prune
98	15015 Memorial	15" Water Oak	Private tree	Root prune for street, Demo-Form-Pour walk without damage to tree roots 1" or larger, Fence, Clearance prune
99	15015 Memorial	10" Pine	Private tree	Root prune for street, Demo-Form-Pour walk without damage to tree roots 1" or larger, Fence
100	15015 Memorial	17" Pine	Private tree	Root prune for street, Demo-Form-Pour walk without damage to tree roots 1" or larger, Fence
101	15015 Memorial	11" Willow Oak	Private tree	Root prune for street, Demo-Form-Pour walk without damage to tree roots 1" or larger, Fence, Clearance prune
102	15015 Memorial	16" Pine	Private tree	Root prune for street, Demo-Form-Pour walk without damage to tree roots 1" or larger, Fence
103	15015 Memorial	9" Willow Oak	Private tree	Root prune for street, Demo-Form-Pour walk without damage to tree roots 1" or larger, Fence
104	15015 Memorial	9" Green Ash	Private tree	Root prune for street, Demo-Form-Pour walk without damage to tree roots 1" or larger, Fence
105	15015 Memorial	19" Willow Oak	Private tree	Root prune for street, Demo-Form-Pour walk without damage to tree roots 1" or larger, Fence, Clearance prune
106	15015 Memorial	14" Willow Oak	Private tree, will not be impacted	Root prune for street, Demo-Form-Pour walk without damage to tree roots 1" or larger, Fence, Clearance prune
107	15015 Memorial	13" American Elm	Private tree	Root prune for street, Demo-Form-Pour walk without damage to tree roots 1" or larger, Fence, Clearance prune
108	15015 Memorial	8" Willow Oak	Private tree	Root prune for street, Demo-Form-Pour walk without damage to tree roots 1" or larger, Fence, Clearance prune
109	15015 Memorial	11" Water Oak	Private tree	Root prune for street, Demo-Form-Pour walk without damage to tree roots 1" or larger, Fence, Clearance prune
110	15015 Memorial	14" Water Oak	Private tree	Root prune for street, Demo-Form-Pour walk without damage to tree roots 1" or larger, Fence, Clearance prune
111	15015 Memorial	14" Water Oak	Private tree	Root prune for street, Demo-Form-Pour walk without damage to tree roots 1" or larger, Fence, Clearance prune
112	15015 Memorial	9" Pine	Ordinance tree	Root prune for street, Demo-Form-Pour walk without damage to tree roots 1" or larger, Fence
113	15015 Memorial	13" Pine	Ordinance tree	Root prune for street, Demo-Form-Pour walk without damage to tree roots 1" or larger, Fence
114	15015 Memorial	10" Pine	Private tree	Root prune for street, Demo-Form-Pour walk without damage to tree roots 1" or larger, Fence
115	15015 Memorial	18" Pine	Ordinance tree	Root prune for street, Demo-Form-Pour walk without damage to tree roots 1" or larger, Fence
116	15015 Memorial	12" Pine	Private tree	Root prune for street, Demo-Form-Pour walk without damage to tree roots 1" or larger, Fence
117	15015 Memorial	9" Pine	Private tree	Root prune for street, Demo-Form-Pour walk without damage to tree roots 1" or larger, Fence
118	15015 Memorial	9" Pine	Private tree	Root prune for street, Demo-Form-Pour walk without damage to tree roots 1" or larger, Fence
119	15015 Memorial	7" Pine	Private tree	Root prune for street, Demo-Form-Pour walk without damage to tree roots 1" or larger, Fence
120	15015 Memorial	11" Pine	Private tree	Root prune for street, Demo-Form-Pour walk without damage to tree roots 1" or larger, Fence
121	15015 Memorial	12" Pine	Private tree	Root prune for street, Demo-Form-Pour walk without damage to tree roots 1" or larger, Fence
122	15015 Memorial	11" Pine	Private tree	Root prune for street, Demo-Form-Pour walk without damage to tree roots 1" or larger, Fence

Tree No.	Location	Description	Comments	Treatment
123	Not available	3" Ligustrum	Not ordinance tree	
124	Not available	3" Ligustrum	Not ordinance tree	
125	Not available	3" Ligustrum	Not ordinance tree	
126	Memorial Oaks Cemetery	14" Pine	Private tree	Root prune for sanitary, Clearance prune
127	Memorial Oaks Cemetery	12" Water Oak	Private tree	Root prune for sanitary, Clearance prune
128	Memorial Oaks Cemetery	4" Ligustrum	Not ordinance tree, remove for walk	Remove tree, No replacement required
129	14927 LaCosta	3 Sago	Not ordinance tree	
130	14927 LaCosta	3 Sago	Not ordinance tree	Clearance prune
131	14927 LaCosta	25" Pine	Private tree	Root prune for sanitary
132	14932 Kimberly	11" Magnolia	Private tree	Root prune for sanitary, Clearance prune
133	14935 Kimberly	1" Rose	Not ordinance tree, remove for walk	Remove tree, No replacement required
134	14935 Kimberly	1" Rose	Not ordinance tree, remove for walk	Remove tree, No replacement required
135	14935 Kimberly	4 Sago	Not ordinance tree	
136	14935 Kimberly	3" Crepe Myrtle	Not ordinance tree, remove for walk	Remove tree, No replacement required
137	14935 Kimberly	3" Crepe Myrtle	Not ordinance tree, remove for walk	Remove tree, No replacement required
138	14935 Kimberly	12" Pine	Ordinance tree	Bore sanitary, Root prune for street, Demo-Form-Pour walk without damage to tree roots 1" or larger, Fence, Clearance prune
139	14935 Kimberly	8" Pine	Ordinance tree	Bore sanitary, Root prune for street, Demo-Form-Pour walk without damage to tree roots 1" or larger, Fence, Clearance prune
140	14935 Kimberly	14" Pine	Ordinance tree	Bore sanitary, Root prune for street, Demo-Form-Pour walk without damage to tree roots 1" or larger, Fence, Clearance prune
141	14935 Kimberly	4" Pine	Ordinance tree	Bore sanitary, Root prune for street, Demo-Form-Pour walk without damage to tree roots 1" or larger, Fence, Clearance prune
142	14935 Kimberly	8" Pine	Ordinance tree	Bore sanitary, Root prune for street, Demo-Form-Pour walk without damage to tree roots 1" or larger, Fence, Clearance prune
143	14935 Kimberly	7" Pine	Ordinance tree	Bore sanitary, Root prune for street, Demo-Form-Pour walk without damage to tree roots 1" or larger, Fence, Clearance prune
144	14935 Kimberly	11" Pine	Ordinance tree	Bore sanitary, Root prune for street, Demo-Form-Pour walk without damage to tree roots 1" or larger, Fence, Clearance prune
145	14935 Kimberly	10" Pine	Ordinance tree	Bore sanitary, Root prune for street, Demo-Form-Pour walk without damage to tree roots 1" or larger, Fence, Clearance prune
146	Not available	19" Pine	Ordinance tree	Bore sanitary, Root prune for street, Demo-Form-Pour walk without damage to tree roots 1" or larger, Fence, Clearance prune
147	Not available	30" Live Oak	Utility pruned, Ordinance tree	Bore sanitary, Root prune for street, Demo-Form-Pour walk without damage to tree roots 1" or larger, Fence, Clearance prune
148	Not available	8" Live Oak	Ordinance tree	Bore sanitary, Root prune for street, Demo-Form-Pour walk without damage to tree roots 1" or larger, Fence, Clearance prune
149	Not available	8" Live Oak	Ordinance tree	Bore sanitary, Root prune for street, Demo-Form-Pour walk without damage to tree roots 1" or larger, Fence, Clearance prune
150	Not available	20" Pine	Ordinance tree	Bore sanitary, Root prune for street, Demo-Form-Pour walk without damage to tree roots 1" or larger, Fence, Clearance prune
151	Not available	8" Oleander	Ordinance tree	Bore sanitary, Root prune for street, Demo-Form-Pour walk without damage to tree roots 1" or larger, Fence, Clearance prune
152	Not available	8" Oleander	Ordinance tree	Bore sanitary, Root prune for street, Demo-Form-Pour walk without damage to tree roots 1" or larger, Fence, Clearance prune
153	Not available	8" Live Oak	Ordinance tree	Bore sanitary, Root prune for street, Demo-Form-Pour walk without damage to tree roots 1" or larger, Fence, Clearance prune
154	Not available	9" Live Oak	Ordinance tree	Bore sanitary, Root prune for street, Demo-Form-Pour walk without damage to tree roots 1" or larger, Fence, Clearance prune
155	Not available	17" Pine	Ordinance tree, Remove for new sidewalk	Remove tree, Provide 17" replacement
156	Not used			
157	Not available	11" Tallow	Trunk cavity, Private tree	Clearance prune
158	Not available	3" Ligustrum	Not ordinance tree	
159	Not available	14" Willow Oak	30% dieback, Private tree	Demo-Form-Pour walk without damage to tree roots 1" or larger, Fence
160	Not available	16" Willow Oak	45% dieback, Private tree	Demo-Form-Pour walk without damage to tree roots 1" or larger, Fence
161	Not available	12" Pine	Private tree	Demo-Form-Pour walk without damage to tree roots 1" or larger, Fence, Clearance prune
162	Not available	3" Ligustrum	Not ordinance tree	
163	Not available	15" Green Ash	Private tree	Root prune for street, Demo-Form-Pour walk without damage to tree roots 1" or larger, Fence, Clearance prune
164	Not available	3" Ligustrum	Not ordinance tree	
165	Not available	3" Ligustrum	Not ordinance tree	
166	Not available	15" Sugarberry	Not ordinance tree	
167	Not available	10" Pear	Not ordinance tree	
168	Not available	8" Bur Oak	Ordinance tree	Demo-Form-Pour walk without damage to tree roots 1" or larger, Fence, Clearance prune
169	Not available	9" Pear	Not ordinance tree	
170	Not available	7" Bur Oak	Ordinance tree	Demo-Form-Pour walk without damage to tree roots 1" or larger, Fence, Clearance prune
171	Not available	9" Bur Oak	Ordinance tree	Demo-Form-Pour walk without damage to tree roots 1" or larger, Fence, Clearance prune
172	Not available	10" Pear	Not ordinance tree	
173	Not available	10" Shumard Oak	Ordinance tree, Remove for new sidewalk	Remove tree, Provide 10" replacement
174	Not available	10" Shumard Oak	Ordinance tree	Zero curb cutback, Fence, Demo-Form-Pour walk without damage to tree roots 1" or larger, Clearance prune
175	Not available	8" Cherry laurel	Not ordinance tree, remove for walk	Remove tree, No replacement required
176	Not available	8" Cherry laurel	Not ordinance tree, remove for walk	Remove tree, No replacement required
177	Not available	26" Pine	Private tree	20' checkerplate, Demo-Form-Pour walk without damage to roots 1" or larger, Root prune for street, Fence, Clearance prune

NOTE:

1. THIS TREE PROTECTION PLAN WAS DEVELOPED WITH INFORMATION PROVIDED BY DESIGN ENGINEER IN DRAWINGS DATED AUGUST 2014. THE PLAN CONSIDERS ALL FITTINGS, VERTICAL OFFSETS AND AREAS OF NECESSARY EXCAVATION. CHANGES MADE TO DESIGN MAY COMPROMISE THE TREE PROTECTION PLAN. REFER TO SPECIFICATIONS 01562 AND 02915. CONDITION OF EACH TREE IS BASED ON VISUAL EVALUATION AT TIME OF DESIGN. CONDITION AND STRUCTURAL INTEGRITY OF EACH TREE IS NOT GUARANTEED BY DESIGNER AT ANY POINT IN THE FUTURE, AS ENVIRONMENTAL AND MAINTENANCE INFLUENCES ON EACH TREE CAN NOT BE DETERMINED BY DESIGNER.

2. THE CONTRACTOR'S ARBORIST WILL MARK LOCATIONS OF THE NEW TREES AND OBTAIN APPROVAL BY THE CITY ENGINEER AND CITY FORESTER BEFORE PURCHASING AND PLANTING TREES.

TREE PRESERVATION PLAN LEGEND

- TREE NUMBER/LOCATION
- TREE TO BE REMOVED
- TREE PROTECTION FENCE
- ROOT PRUNING TRENCH
- REPLACEMENT PLANTING SPECIES AND SIZE/TYPE
- ZERO CUTBACK CURB
- SIDEWALK ON GRADE
- CHECKERPLATE SECTION

REV	DESCRIPTION	BY	DATE

Texas Department of Transportation ©2013

CivilTech Engineering, Inc.
11821 Telge Road
Cypress, Texas 77429
(281) 304-0200 Fax (281) 304-0210
Registration No. F-382

C.N. Koehl Urban Forestry, Inc.
210 Stone Bush Ct. • Katy, Texas 77493
281-391-0022 ckoehl@koehlurbanforestry.com

APPROVED: Craig N. Koehl 8/18/14

SURVEYED BY: WGC FB No. P-5779

CITY OF HOUSTON
DEPARTMENT OF PUBLIC WORKS AND ENGINEERING

MEMORIAL DRIVE
PAVING AND DRAINAGE IMPROVEMENTS

TREE PROTECTION PLAN
SHEET 2 OF 11

WBS NUMBER: N-000798-0001-4

DRAWING SCALE

CITY OF HOUSTON PM: MICHELLE RANDON, P.E.

SHEET No. 188 OF 358

53954 CITY DRAWING NUMBER

CivilTech Engineering, Inc. C:\Users\medb\Desktop\LUKE\nEDb\CivilTech Memorial\154-CivilTech_Memorial_TP-2.dwg Aug 21, 2014

REV	DESCRIPTION	BY	DATE

NOTE:

1. THIS TREE PROTECTION PLAN WAS DEVELOPED WITH INFORMATION PROVIDED BY DESIGN ENGINEER IN DRAWINGS DATED AUGUST 2014. THE PLAN CONSIDERS ALL FITTINGS, VERTICAL OFFSETS AND AREAS OF NECESSARY EXCAVATION. CHANGES MADE TO DESIGN MAY COMPROMISE THE TREE PROTECTION PLAN. REFER TO SPECIFICATIONS 01562 AND 02915. CONDITION OF EACH TREE IS BASED ON VISUAL EVALUATION AT TIME OF DESIGN. CONDITION AND STRUCTURAL INTEGRITY OF EACH TREE IS NOT GUARANTEED BY DESIGNER AT ANY POINT IN THE FUTURE, AS ENVIRONMENTAL AND MAINTENANCE INFLUENCES ON EACH TREE CAN NOT BE DETERMINED BY DESIGNER.
2. THE CONTRACTOR'S ARBORIST WILL MARK LOCATIONS OF THE NEW TREES AND OBTAIN APPROVAL BY THE CITY ENGINEER AND CITY FORESTER BEFORE PURCHASING AND PLANTING TREES.

TREE PRESERVATION PLAN LEGEND

- TREE NUMBER/LOCATION
- TREE TO BE REMOVED
- TREE PROTECTION FENCE
- ROOT PRUNING TRENCH
- REPLACEMENT PLANTING SPECIES AND SIZE/TYPE
- ZERO CUTBACK CURB
- SIDEWALK ON GRADE
- CHECKERPLATE SECTION

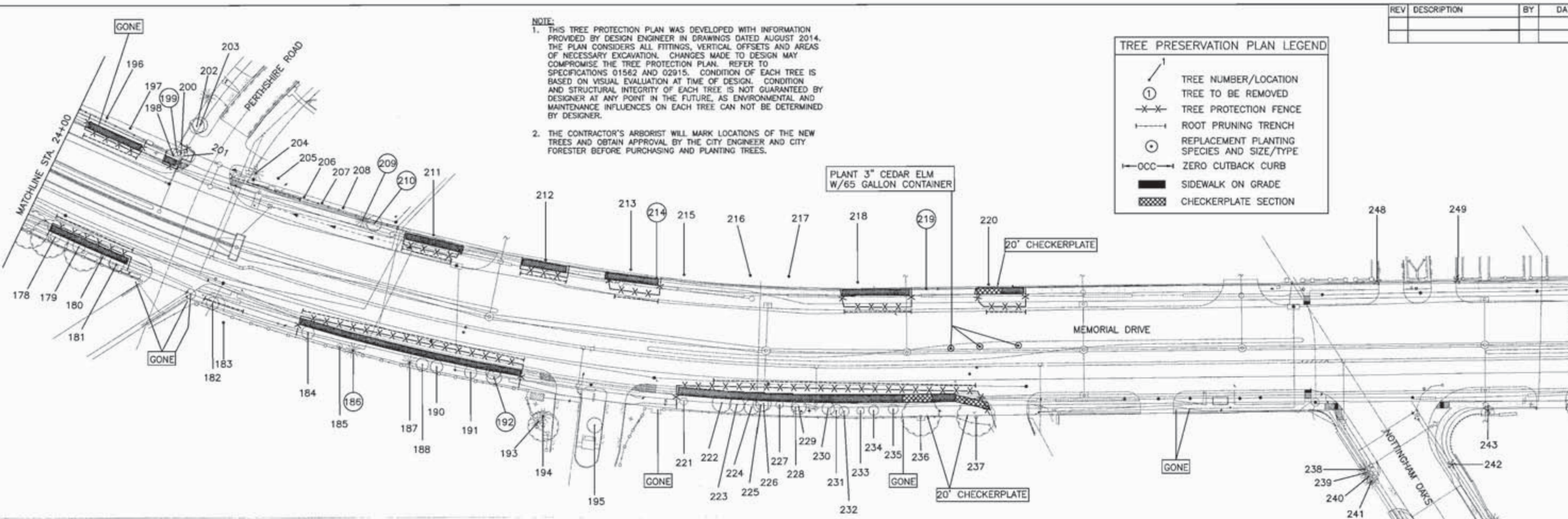

Tree No.	Location	Description	Comments	Treatment
178	Not available	10" Bur Oak	Ordinance tree	Root prune for street, Demo-Form-Pour walk without damage to tree roots 1" or larger, Fence, Clearance prune
179	Not available	11" Pear	Not ordinance tree	
180	Not available	5" Magnolia	Ordinance tree	Root prune for street, Demo-Form-Pour walk without damage to tree roots 1" or larger, Fence, Clearance prune
181	Not available	12" Green Ash	Ordinance tree	Root prune for street, Demo-Form-Pour walk without damage to tree roots 1" or larger, Fence, Clearance prune
182	Not available	4" Crepe Myrtle	Not ordinance tree	
183	Not available	17" Pine	Private tree	Root prune for sidewalk
184	Not available	9" Baldcypress	Ordinance tree	Root prune for street, Demo-Form-Pour walk without damage to tree roots 1" or larger, Fence, Clearance prune
185	Not available	4" Water Oak	Ordinance tree	Root prune for street, Demo-Form-Pour walk without damage to tree roots 1" or larger, Fence, Clearance prune
186	Not available	11" Pine	12' tall dead trunk, Remove for new sidewalk	Remove tree, No replacement required
187	Not available	9" Pine	Ordinance tree	Root prune for street, Demo-Form-Pour walk without damage to tree roots 1" or larger, Fence, Clearance prune
188	Not available	8" Shumard Oak	Ordinance tree	Root prune for street, Demo-Form-Pour walk without damage to tree roots 1" or larger, Fence, Clearance prune
189	Not available	7" Shumard Oak	Ordinance tree	Root prune for street, Demo-Form-Pour walk without damage to tree roots 1" or larger, Fence, Clearance prune
190	Not available	7" Sugarberry	Not ordinance tree	
191	Not available	6" Live Oak	Ordinance tree	Root prune for street, Demo-Form-Pour walk without damage to tree roots 1" or larger, Fence, Clearance prune
192	Not available	5" Sugarberry	Not ordinance tree, remove for walk	Remove tree, No replacement required
193	Not available	11" Pine	Private tree, will not be impacted	
194	Not available	11" Pine	Private tree, will not be impacted	
195	Not available	9" Live Oak	Private tree, will not be impacted	
196	14922 Perthshire	11" Tallow	Not ordinance tree	Clearance prune
197	14922 Perthshire	22" Sweetgum	Utility pruned, Ordinance tree	Bore sanitary, Root prune for street, Demo-Form-Pour walk without damage to tree roots 1" or larger, Fence, Clearance prune
198	14922 Perthshire	4" Water Oak	Private tree	Demo-Form-Pour walk without damage to tree roots 1" or larger, Fence, Clearance prune
199	14922 Perthshire	8" Ligustrum	Not ordinance tree, remove for walk	Remove tree, No replacement required
200	14922 Perthshire	6" Ligustrum	Not ordinance tree	
201	14922 Perthshire	6" Ligustrum	Not ordinance tree	
202	14922 Perthshire	8" Catalpa	Not ordinance tree	
203	14922 Perthshire	8" Ligustrum	Not ordinance tree	
204	14903 Perthshire	12" Pine	Private tree	Root prune for sanitary, Clearance prune
205	14903 Perthshire	15" Pine	Private tree	Root prune for sanitary, Clearance prune
206	14903 Perthshire	11" Ligustrum	Not ordinance tree	Clearance prune
207	14903 Perthshire	11" Ligustrum	Not ordinance tree	Clearance prune
208	14903 Perthshire	11" Ligustrum	Not ordinance tree	Clearance prune
209	14903 Perthshire	22" Pine	Ordinance tree, Remove for new sidewalk	Remove tree, Provide 22" replacement
210	14903 Perthshire	11" Gum Bumelia	Ordinance tree, Remove for new sidewalk	Remove tree, Provide 11" replacement
211	14900 Memorial	19" Live Oak	Private tree	Bore sanitary, Root prune for street, Demo-Form-Pour walk without damage to tree roots 1" or larger, Fence, Clearance prune
212	14900 Memorial	19" Live Oak	Private tree	Bore sanitary, Root prune for street, Demo-Form-Pour walk without damage to tree roots 1" or larger, Fence, Clearance prune
213	14900 Memorial	10" Live Oak	Private tree	Bore sanitary, Root prune for street, Demo-Form-Pour walk without damage to tree roots 1" or larger, Fence, Clearance prune
214	14900 Memorial	3" Variegated Pittosporum	Not ordinance tree, remove for walk	Remove tree, No replacement required
215	14900 Memorial	25' Palm	Private tree, will not be impacted	
216	14900 Memorial	25' Palm	Private tree, will not be impacted	
217	14900 Memorial	14' Palm	Private tree, will not be impacted	
218	14900 Memorial	38" Arizona Ash	Private tree	Root prune for street, Demo-Form-Pour walk without damage to tree roots 1" or larger, Fence, Clearance prune

Tree No.	Location	Description	Comments	Treatment
219	14900 Memorial	20" Live Oak	Ordinance tree, Remove for new sidewalk	Remove tree, Provide 20" replacement
220	14900 Memorial	21" Live Oak	Private tree	20' checkerplate, Demo-Form-Pour walk without damage to roots 1" or larger, Root prune for street, Fence, Clearance prune
221	Not available	9" Lacebark Elm	Ordinance tree	Root prune for street, Demo-Form-Pour walk without damage to tree roots 1" or larger, Fence, Clearance prune
222	Not available	5" Lacebark Elm	Ordinance tree	Root prune for street, Demo-Form-Pour walk without damage to tree roots 1" or larger, Fence, Clearance prune
223	Not available	4" Lacebark Elm	Ordinance tree	Root prune for street, Demo-Form-Pour walk without damage to tree roots 1" or larger, Fence, Clearance prune
224	Not available	7" Lacebark Elm	Ordinance tree	Root prune for street, Demo-Form-Pour walk without damage to tree roots 1" or larger, Fence, Clearance prune
225	Not available	5" Lacebark Elm	Ordinance tree	Root prune for street, Demo-Form-Pour walk without damage to tree roots 1" or larger, Fence, Clearance prune
226	Not available	6" Lacebark Elm	Ordinance tree	Root prune for street, Demo-Form-Pour walk without damage to tree roots 1" or larger, Fence, Clearance prune
227	Not available	5" Lacebark Elm	Ordinance tree	Root prune for street, Demo-Form-Pour walk without damage to tree roots 1" or larger, Fence, Clearance prune
228	Not available	6" Lacebark Elm	Ordinance tree	Root prune for street, Demo-Form-Pour walk without damage to tree roots 1" or larger, Fence, Clearance prune
229	Not available	4" Lacebark Elm	Ordinance tree	Root prune for street, Demo-Form-Pour walk without damage to tree roots 1" or larger, Fence, Clearance prune
230	Not available	5" Lacebark Elm	Ordinance tree	Root prune for street, Demo-Form-Pour walk without damage to tree roots 1" or larger, Fence, Clearance prune
231	Not available	7" Lacebark Elm	Ordinance tree	Root prune for street, Demo-Form-Pour walk without damage to tree roots 1" or larger, Fence, Clearance prune
232	Not available	9" Lacebark Elm	Ordinance tree	Root prune for street, Demo-Form-Pour walk without damage to tree roots 1" or larger, Fence, Clearance prune
233	Not available	6" Lacebark Elm	Ordinance tree	Root prune for street, Demo-Form-Pour walk without damage to tree roots 1" or larger, Fence, Clearance prune
234	Not available	5" Lacebark Elm	Ordinance tree	Root prune for street, Demo-Form-Pour walk without damage to tree roots 1" or larger, Fence, Clearance prune
235	Not available	6" Lacebark Elm	Ordinance tree	Root prune for street, Demo-Form-Pour walk without damage to tree roots 1" or larger, Fence, Clearance prune
236	Not available	21" Live Oak	Utility pruned, Ordinance tree	20' checkerplate, Demo-Form-Pour walk without damage to roots 1" or larger, Root prune for street, Fence, Clearance prune
237	Not available	17" Live Oak	Utility pruned, Ordinance tree	20' checkerplate, Demo-Form-Pour walk without damage to roots 1" or larger, Root prune for street, Fence, Clearance prune
238	Not available	4" Italian Cypress	Not ordinance tree	
239	Not available	4" Italian Cypress	Not ordinance tree	
240	Not available	4" Italian Cypress	Not ordinance tree	
241	Not available	4" Italian Cypress	Not ordinance tree	
242	Not available	10' Palm	Not ordinance tree	
243	Not available	10' Palm	Not ordinance tree	
244	14701 Memorial	13" Pine	Private tree	Demo-Form-Pour walk without damage to tree roots 1" or larger, Fence
245	14701 Memorial	15" Pine	Ordinance tree	Root prune for street, Demo-Form-Pour walk without damage to tree roots 1" or larger, Fence, Clearance prune
246	14701 Memorial	11" Pine	Private tree	Demo-Form-Pour walk without damage to tree roots 1" or larger, Fence
247	14701 Memorial	4' Ligustrum Hedge	Not ordinance tree, remove for walk	Remove tree, No replacement required
248	Not available	5' Sago	Private tree	Clearance prune
249	Not available	4' Sago	Private tree	Clearance prune

Texas Department of Transportation ©2013

CivilTech Engineering, Inc.
11821 Telge Road
Cypress, Texas 77429
(281) 304-0200 Fax (281) 304-0210
Registration No. F-382

C.N. Koehl
Urban Forestry, Inc.
210 Stone Bush Ct. • Katy, Texas 77493
281-391-0022 ckoehl@koehlurbanforestry.com

APPROVED: Craig N. Koehl 8/18/14

SURVEYED BY: WGC FB No. P-5779

CITY OF HOUSTON

DEPARTMENT OF PUBLIC WORKS AND ENGINEERING

MEMORIAL DRIVE

PAVING AND DRAINAGE IMPROVEMENTS

TREE PROTECTION PLAN
SHEET 3 OF 11

WBS NUMBER
N-000798-0001-4
DRAWING SCALE
CITY OF HOUSTON PM
MICHELLE RANDON, P.E.
SHEET No. 189 OF 358

53954 CITY DRAWING NUMBER

CivilTech Engineering, Inc.
C:\Users\vedh\Desktop\LUKE\vE36\CivilTech Memorial\155-CivilTech_Memorial_TP-3.dwg Aug 21, 2014

REV	DESCRIPTION	BY	DATE

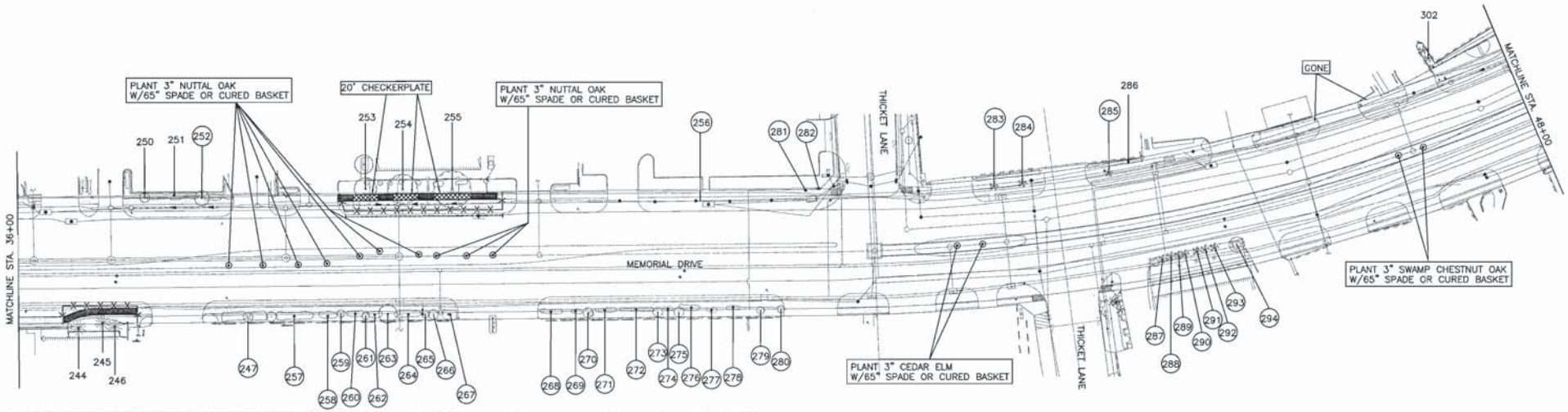

Tree No.	Location	Description	Comments	Treatment
244	14761 Memorial	13" Pine	Private tree	Demo-Form-Pour walk without damage to tree roots 1" or larger, Fence
245	14761 Memorial	15" Pine	Ordinance tree	Root prune for street, Demo-Form-Pour walk without damage to tree roots 1" or larger, Fence, Clearance prune
246	14761 Memorial	11" Pine	Private tree	Demo-Form-Pour walk without damage to tree roots 1" or larger, Fence
247	14761 Memorial	4' Ligustrum Hedge	Not ordinance tree, remove for walk	Remove tree, No replacement required
249	Not available	4' Sago	Private tree	Clearance prune
250	14770 Memorial	4" Crepe Myrtle	Not ordinance tree	Clearance prune
251	14770 Memorial	2' Hawthorne Hedge	Not ordinance tree	Clearance prune and/or remove as necessary for new walk
252	14770 Memorial	4" Crepe Myrtle	Not ordinance tree, remove for walk	Remove tree, No replacement required
253	14760 Memorial	25" Live Oak	Private tree	Hand dig for down spout connections, 20' checkerplate, Demo-Form-Pour walk without damage to roots 1" or larger, Root prune for street, Fence, Clearance prune
254	14760 Memorial	24" Live Oak	Private tree	Hand dig for down spout connections, 20' checkerplate, Demo-Form-Pour walk without damage to roots 1" or larger, Root prune for street, Fence, Clearance prune
255	14760 Memorial	28" Live Oak	Private tree	Hand dig for down spout connections, 20' checkerplate, Demo-Form-Pour walk without damage to roots 1" or larger, Root prune for street, Fence, Clearance prune
256	14754 Memorial	4' Sago	Not ordinance tree, remove for walk	Remove tree, No replacement required
257	14763 Memorial	4' Ligustrum Hedge	Not ordinance tree, remove for walk	Remove tree, No replacement required
258	14763 Memorial	4' Ligustrum Hedge	Not ordinance tree, remove for walk	Remove tree, No replacement required
259	14763 Memorial	4' Ligustrum Hedge	Not ordinance tree, remove for walk	Remove tree, No replacement required
260	14763 Memorial	4' Ligustrum Hedge	Not ordinance tree, remove for walk	Remove tree, No replacement required
261	14763 Memorial	4' Ligustrum Hedge	Not ordinance tree, remove for walk	Remove tree, No replacement required
262	14763 Memorial	4' Ligustrum Hedge	Not ordinance tree, remove for walk	Remove tree, No replacement required
263	14763 Memorial	4' Ligustrum Hedge	Not ordinance tree, remove for walk	Remove tree, No replacement required
264	14763 Memorial	4' Ligustrum Hedge	Not ordinance tree, remove for walk	Remove tree, No replacement required
265	14763 Memorial	4' Ligustrum Hedge	Not ordinance tree, remove for walk	Remove tree, No replacement required
266	14763 Memorial	4' Ligustrum Hedge	Not ordinance tree, remove for walk	Remove tree, No replacement required
267	14763 Memorial	4' Ligustrum Hedge	Not ordinance tree, remove for walk	Remove tree, No replacement required
268	14763 Memorial	4' Ligustrum Hedge	Not ordinance tree, remove for walk	Remove tree, No replacement required
269	14763 Memorial	4' Ligustrum Hedge	Not ordinance tree, remove for walk	Remove tree, No replacement required
270	14763 Memorial	4' Ligustrum Hedge	Not ordinance tree, remove for walk	Remove tree, No replacement required
271	14763 Memorial	4' Ligustrum Hedge	Not ordinance tree, remove for walk	Remove tree, No replacement required
272	14763 Memorial	4' Ligustrum Hedge	Not ordinance tree, remove for walk	Remove tree, No replacement required
273	14763 Memorial	4' Ligustrum Hedge	Not ordinance tree, remove for walk	Remove tree, No replacement required
274	14763 Memorial	4' Ligustrum Hedge	Not ordinance tree, remove for walk	Remove tree, No replacement required
275	14763 Memorial	4' Ligustrum Hedge	Not ordinance tree, remove for walk	Remove tree, No replacement required
276	14763 Memorial	4' Ligustrum Hedge	Not ordinance tree, remove for walk	Remove tree, No replacement required
277	14763 Memorial	4' Ligustrum Hedge	Not ordinance tree, remove for walk	Remove tree, No replacement required
278	14763 Memorial	4' Ligustrum Hedge	Not ordinance tree, remove for walk	Remove tree, No replacement required
279	14763 Memorial	4' Ligustrum Hedge	Not ordinance tree, remove for walk	Remove tree, No replacement required
280	14763 Memorial	4' Ligustrum Hedge	Not ordinance tree, remove for walk	Remove tree, No replacement required
281	14754 Memorial	4' Redtip Hedge	Not ordinance tree, remove for walk	Remove tree, No replacement required
282	14754 Memorial	2' Hawthorne Hedge	Not ordinance tree, remove for walk	Remove tree, No replacement required
283	14750 Memorial	20' Palm	Not ordinance tree, remove for walk	Remove tree, No replacement required
284	14750 Memorial	20' Palm	Not ordinance tree, remove for walk	Remove tree, No replacement required
285	14750 Memorial	30' Palm	Not ordinance tree, remove for walk	Remove tree, No replacement required
286	14750 Memorial	2' Boxwood Hedge	Not ordinance tree	
287	14737 Memorial	2" Ligustrum	Not ordinance tree, remove for street	Remove tree, No replacement required
288	14737 Memorial	2' Palm	Not ordinance tree, remove for street	Remove tree, No replacement required
289	14737 Memorial	2" Ligustrum	Not ordinance tree, remove for street	Remove tree, No replacement required
290	14737 Memorial	2' Palm	Not ordinance tree, remove for street	Remove tree, No replacement required
291	14737 Memorial	2" Ligustrum	Not ordinance tree, remove for street	Remove tree, No replacement required
292	14737 Memorial	2' Palm	Not ordinance tree, remove for street	Remove tree, No replacement required
293	14737 Memorial	3' Palm	Not ordinance tree, remove for street	Remove tree, No replacement required
294	14737 Memorial	3" Ligustrum	Not ordinance tree, remove for street	Remove tree, No replacement required
302	14714 Memorial	3' Palm	Private tree, will not be impacted	

NOTE:

1. THIS TREE PROTECTION PLAN WAS DEVELOPED WITH INFORMATION PROVIDED BY DESIGN ENGINEER IN DRAWINGS DATED AUGUST 2014. THE PLAN CONSIDERS ALL FITTINGS, VERTICAL OFFSETS AND AREAS OF NECESSARY EXCAVATION. CHANGES MADE TO DESIGN MAY COMPROMISE THE TREE PROTECTION PLAN. REFER TO SPECIFICATIONS 01562 AND 02915. CONDITION OF EACH TREE IS BASED ON VISUAL EVALUATION AT TIME OF DESIGN. CONDITION AND STRUCTURAL INTEGRITY OF EACH TREE IS NOT GUARANTEED BY DESIGNER AT ANY POINT IN THE FUTURE, AS ENVIRONMENTAL AND MAINTENANCE INFLUENCES ON EACH TREE CAN NOT BE DETERMINED BY DESIGNER.
2. THE CONTRACTOR'S ARBORIST WILL MARK LOCATIONS OF THE NEW TREES AND OBTAIN APPROVAL BY THE CITY ENGINEER AND CITY FORESTER BEFORE PURCHASING AND PLANTING TREES.

TREE PRESERVATION PLAN LEGEND

- TREE NUMBER/LOCATION
- TREE TO BE REMOVED
- TREE PROTECTION FENCE
- ROOT PRUNING TRENCH
- REPLACEMENT PLANTING SPECIES AND SIZE/TYPE
- ZERO CUTBACK CURB
- SIDEWALK ON GRADE
- CHECKERPLATE SECTION

Texas Department of Transportation © 2013

CivilTech Engineering, Inc.
11821 Telge Road
Cypress, Texas 77429
(281) 304-0200 Fax (281) 304-0210
Registration No. F-382

C.N. Koehl
Urban Forestry, Inc.
210 Stone Bush Ct. • Katy, Texas 77493
281-391-0022 ckoehl@koehlurbanforestry.com

APPROVED: Craig N. Koehl 8/18/14

SURVEYED BY: WGC FB No. P-5779

CITY OF HOUSTON
DEPARTMENT OF PUBLIC WORKS AND ENGINEERING

MEMORIAL DRIVE
PAVING AND DRAINAGE IMPROVEMENTS

TREE PROTECTION PLAN
SHEET 4 OF 11

WBS NUMBER
N-000798-0001-4
DRAWING SCALE
CITY OF HOUSTON PM
MICHELLE RANDON, P.E.
SHEET No. 190 OF 358

53954

CivilTech Engineering, Inc.
G:\Users\cadd\Desktop\LINEVEDX\CivilTech Memorial\158-CivilTech_Memorial_TP-4.dwg Aug 21, 2014

REV	DESCRIPTION	BY	DATE

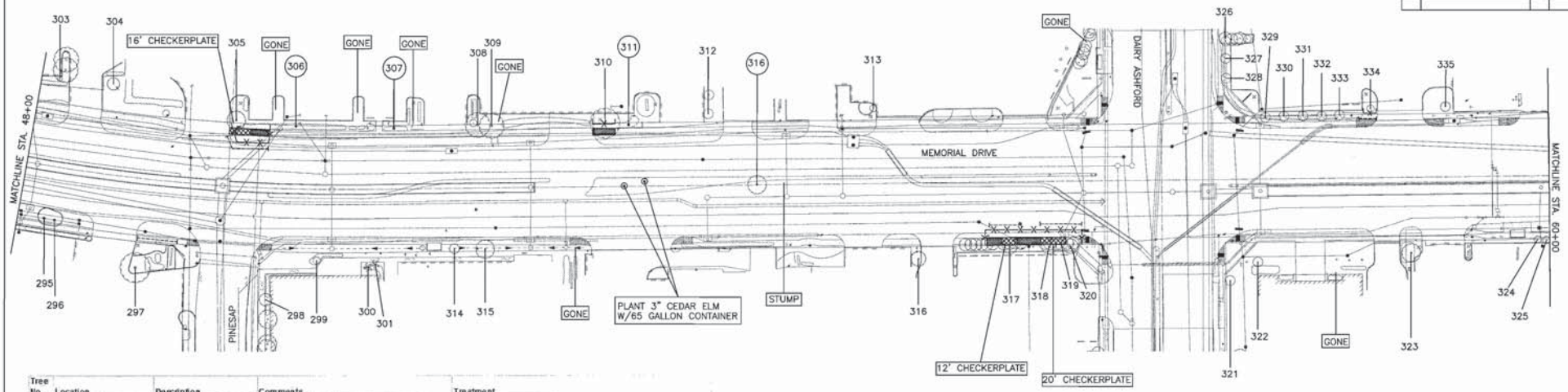

Tree No.	Location	Description	Comments	Treatment
295	Not available	5' Sago	Not ordinance tree	
296	Not available	5' Sago	Not ordinance tree	
297	Not available	23" Live Oak	40% dieback, Private tree	Root prune for sidewalk
298	14637 Memorial	5" Crepe Myrtle	Private tree, will not be impacted	
299	14637 Memorial	5" Holly	Private tree, will not be impacted	
300	14637 Memorial	5' Sago	Private tree, will not be impacted	
301	14637 Memorial	5' Sago	Private tree, will not be impacted	
302	14714 Memorial	3' Palm	Private tree, will not be impacted	
303	14714 Memorial	8" Live Oak	Private tree, will not be impacted	
304	14714 Memorial	7" Yaupon	Private tree, will not be impacted	
305	14714 Memorial	15" Live Oak	Private tree	16' checkerplate, Demo-Form-Pour walk without damage to roots 1" or larger, Root prune for street, Fence, Clearance prune
306	14616 Memorial	3' Hawthorne Hedge	Not ordinance tree	Clearance prune and/or remove as necessary for new walk
307	14616 Memorial	3' Hawthorne Hedge	Not ordinance tree	Clearance prune and/or remove as necessary for new walk
308	14650 Memorial	10" Crape Myrtle	Private tree	Clearance prune
309	14650 Memorial	4' Hawthorne	Not ordinance tree, remove for walk	Remove tree, No replacement required
310	14650 Memorial	4" Live Oak	Private tree	Demo-Form-Pour walk without damage to tree roots 1" or larger, Fence
311	14650 Memorial	4' Hawthorne	Not ordinance tree, remove for walk	Remove tree, No replacement required
312	14606 Memorial	5" Crepe Myrtle	Private tree, will not be impacted	
313	14602 Memorial	6" Crepe Myrtle	Private tree, will not be impacted	
314	Not available	3" Crepe Myrtle	Not ordinance tree	Clearance prune
315	Not available	8" Crepe Myrtle	Not ordinance tree	Clearance prune
316	Esplanade	13" Live Oak	Ordinance tree, Remove for street construction	Remove tree, Provide 13" in replacement
317	Not available	10" Live Oak	Private tree	12' checkerplate, Demo-Form-Pour walk without damage to roots 1" or larger, Root prune for street, Fence, Clearance prune
318	Not available	12" Live Oak	Private tree	12' checkerplate, Demo-Form-Pour walk without damage to roots 1" or larger, Root prune for street, Fence, Clearance prune
319	Not available	12" Live Oak	Private tree	12' checkerplate, Demo-Form-Pour walk without damage to roots 1" or larger, Root prune for street, Fence, Clearance prune
320	Not available	13" Live Oak	Private tree	12' checkerplate, Demo-Form-Pour walk without damage to roots 1" or larger, Root prune for street, Fence, Clearance prune
321	Not available	5" Crepe Myrtle	Private tree, will not be impacted	
322	Not available	5" Crepe Myrtle	Private tree, will not be impacted	
323	Not available	5" Crepe Myrtle	Private tree, will not be impacted	
324	Not available	2" Crepe Myrtle	Private tree, will not be impacted	
325	Not available	2" Crepe Myrtle	Private tree, will not be impacted	
326	14550 Memorial	5" Crepe Myrtle	Private tree, will not be impacted	
327	14550 Memorial	5" Crepe Myrtle	Private tree, will not be impacted	
328	14550 Memorial	5" Crepe Myrtle	Private tree, will not be impacted	
329	14550 Memorial	5" Crepe Myrtle	Not ordinance tree	Clearance prune
330	14550 Memorial	5" Crepe Myrtle	Not ordinance tree	Clearance prune
331	14550 Memorial	5" Crepe Myrtle	Not ordinance tree	Clearance prune
332	14550 Memorial	5" Crepe Myrtle	Not ordinance tree	Clearance prune
333	14550 Memorial	5" Crepe Myrtle	Not ordinance tree	Clearance prune
334	14550 Memorial	7" Live Oak	Private tree	Root prune for sidewalk, Fence, Clearance prune
335	14550 Memorial	5" Crepe Myrtle	Private tree, will not be impacted	

NOTE:

1. THIS TREE PROTECTION PLAN WAS DEVELOPED WITH INFORMATION PROVIDED BY DESIGN ENGINEER IN DRAWINGS DATED AUGUST 2014. THE PLAN CONSIDERS ALL FITTINGS, VERTICAL OFFSETS AND AREAS OF NECESSARY EXCAVATION. CHANGES MADE TO DESIGN MAY COMPROMISE THE TREE PROTECTION PLAN. REFER TO SPECIFICATIONS 01562 AND 02915. CONDITION OF EACH TREE IS BASED ON VISUAL EVALUATION AT TIME OF DESIGN. CONDITION AND STRUCTURAL INTEGRITY OF EACH TREE IS NOT GUARANTEED BY DESIGNER AT ANY POINT IN THE FUTURE, AS ENVIRONMENTAL AND MAINTENANCE INFLUENCES ON EACH TREE CAN NOT BE DETERMINED BY DESIGNER.
2. THE CONTRACTOR'S ARBORIST WILL MARK LOCATIONS OF THE NEW TREES AND OBTAIN APPROVAL BY THE CITY ENGINEER AND CITY FORESTER BEFORE PURCHASING AND PLANTING TREES.

TREE PRESERVATION PLAN LEGEND

- 1 — TREE NUMBER/LOCATION
- (1) — TREE TO BE REMOVED
- -X-X- — TREE PROTECTION FENCE
- ---- — ROOT PRUNING TRENCH
- (⊙) — REPLACEMENT PLANTING SPECIES AND SIZE/TYPE
- OCC — ZERO CUTBACK CURB
- SIDEWALK ON GRADE
- CHECKERPLATE SECTION

Texas Department of Transportation ©2013

CivilTech Engineering, Inc.
11821 Telge Road
Cypress, Texas 77429
(281) 304-0200 Fax (281) 304-0210
Registration No. F-392

C.N. Koehl Urban Forestry, Inc.
210 Stone Bush Ct. • Katy, Texas 77493
281-391-0022 ckoehl@koehlurbanforestry.com

APPROVED: Craig N. Koehl 8/18/14

SURVEYED BY: WGC FB No. P-5779

CITY OF HOUSTON
DEPARTMENT OF PUBLIC WORKS AND ENGINEERING

MEMORIAL DRIVE
PAVING AND DRAINAGE IMPROVEMENTS

TREE PROTECTION PLAN
SHEET 5 OF 11

WBS NUMBER
N-000798-0001-4
DRAWING SCALE
CITY OF HOUSTON PM
MICHELLE RANDON, P.E.
SHEET No. 191 OF 358

53954 CITY DRAWING NUMBER

CivilTech Engineering, Inc.
C:\Users\vadi\Desktop\LINKVIEW\CivilTech Memorial\157-CivilTech_Memorial_TP-5.dwg Aug 21, 2014

REV	DESCRIPTION	BY	DATE

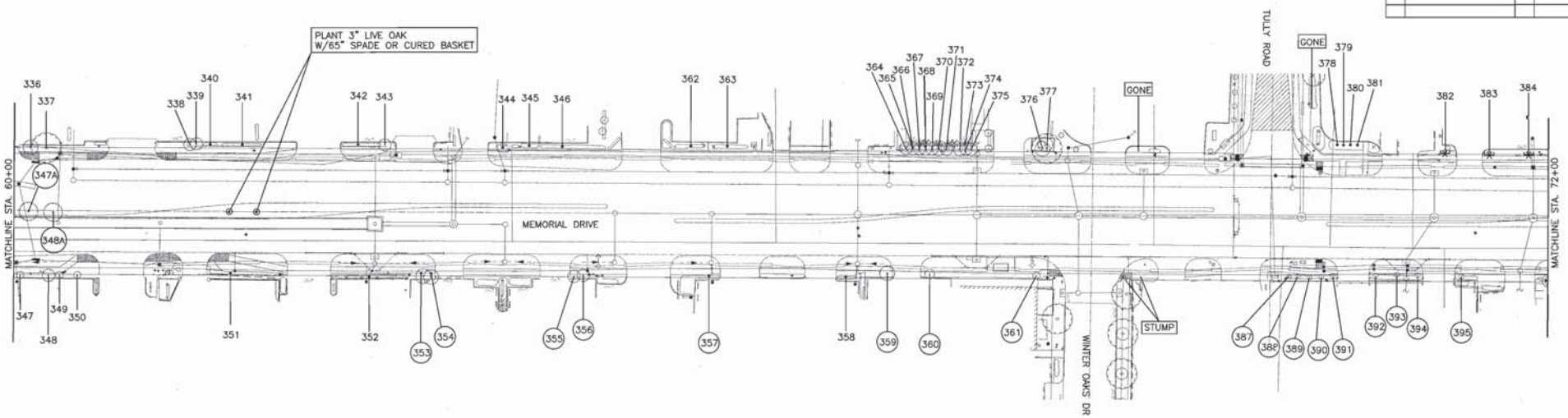

Tree No.	Location	Description	Comments	Treatment
336	14550 Memorial	5" Crepe Myrtle	Not ordinance tree	Clearance prune
337	14550 Memorial	12" Crepe Myrtle	Not ordinance tree	Clearance prune
338	14520 Memorial	3' Redtip Hedge	Not ordinance tree	Clearance prune and/or remove as necessary for new walk
339	14520 Memorial	3' Redtip Hedge	Not ordinance tree	Clearance prune and/or remove as necessary for new walk
340	14520 Memorial	3' Redtip Hedge	Not ordinance tree	Clearance prune and/or remove as necessary for new walk
341	14520 Memorial	3' Redtip Hedge	Not ordinance tree	Clearance prune and/or remove as necessary for new walk
342	14520 Memorial	3' Redtip Hedge	Not ordinance tree	Clearance prune and/or remove as necessary for new walk
343	14520 Memorial	3' Redtip Hedge	Not ordinance tree	Clearance prune and/or remove as necessary for new walk
344	14520 Memorial	4" Oleander	Private tree	Clearance prune
345	14520 Memorial	2' Hawthorne Hedge	Private tree	Clearance prune
346	14520 Memorial	2' Hawthorne Hedge	Private tree	Clearance prune
347	Not available	2" Crepe Myrtle	Private tree, will not be impacted	
347A	Esplanade	11" Live Oak	Ordinance tree, Remove for storm	Remove tree, Provide 11" in replacement
348	Not available	5" Sugarberry	Private tree	Clearance prune
348A	Esplanade	13" Live Oak	Ordinance tree, Remove for storm	Remove tree, Provide 13" in replacement
349	Not available	2" Crepe Myrtle	Private tree, will not be impacted	
350	Not available	2" Crepe Myrtle	Private tree, will not be impacted	
351	Not available	3' Ligustrum Hedge	Not ordinance tree	Clearance prune
352	Not available	3' Ligustrum Hedge	Private tree	Clearance prune
353	14535 Memorial	12" Live Oak	Ordinance tree, Remove for new sidewalk	Remove tree, Provide 12" replacement
354	14535 Memorial	13" Live Oak	Ordinance tree, Remove for new sidewalk	Remove tree, Provide 13" replacement
355	14535 Memorial	7" Live Oak	Ordinance tree, Remove for new sidewalk	Remove tree, Provide 7" replacement
356	14535 Memorial	12" Live Oak	Ordinance tree, Remove for new sidewalk	Remove tree, Provide 12" replacement
357	14529 Memorial	5" Chinese Privet	Not ordinance tree, remove for walk	Remove tree, No replacement required
358	14529 Memorial	5" Chinese Privet	Private tree	Clearance prune
359	14511 Memorial	9" Crepe Myrtle	Not ordinance tree, remove for walk	Remove tree, No replacement required
360	14511 Memorial	8" Crepe Myrtle	Not ordinance tree, remove for walk	Remove tree, No replacement required
361	14511 Memorial	5" Crepe Myrtle	Not ordinance tree, remove for walk	Remove tree, No replacement required
362	14520 Memorial	2' Hawthorne Hedge	Private tree, will not be impacted	
363	14520 Memorial	2' Hawthorne Hedge	Private tree, will not be impacted	
364	Not available	3' Dwarf Yaupon	Private tree, will not be impacted	
365	Not available	8" Italian Cypress	Private tree, will not be impacted	

Tree No.	Location	Description	Comments	Treatment
366	Not available	3' Dwarf Yaupon	Private tree, will not be impacted	
367	Not available	3' Dwarf Yaupon	Private tree, will not be impacted	
368	Not available	3' Dwarf Yaupon	Private tree, will not be impacted	
369	Not available	3' Dwarf Yaupon	Private tree, will not be impacted	
370	Not available	3' Dwarf Yaupon	Private tree, will not be impacted	
371	Not available	3' Dwarf Yaupon	Private tree, will not be impacted	
372	Not available	3' Dwarf Yaupon	Private tree, will not be impacted	
373	Not available	6" Italian Cypress	Private tree, will not be impacted	
374	Not available	3' Dwarf Yaupon	Private tree, will not be impacted	
375	Not available	3' Dwarf Yaupon	Private tree, will not be impacted	
376	Not available	2' Bougainvillea	Private tree, will not be impacted	
377	Not available	8" Arborvitae	Private tree, will not be impacted	
378	14490 Memorial	1" Italian Cypress	Private tree, will not be impacted	
379	14490 Memorial	1" Italian Cypress	Private tree, will not be impacted	
380	14490 Memorial	1" Italian Cypress	Private tree, will not be impacted	
381	14490 Memorial	1" Italian Cypress	Private tree, will not be impacted	
382	14490 Memorial	4" Live Oak	Private tree	Fence, Clearance prune
383	14490 Memorial	4" Live Oak	Private tree	Fence, Clearance prune
384	14490 Memorial	4" Live Oak	Private tree	Fence, Clearance prune
385	14490 Memorial	4" Live Oak	Private tree	Fence, Clearance prune
386	Not available	3' Ligustrum Hedge	Not ordinance tree	Clearance prune and/or remove as necessary for new walk
387	14455 Memorial	3" Savannah Holly	Ordinance tree, Remove for new sidewalk	Remove tree, Provide 3" replacement
388	14455 Memorial	3" Savannah Holly	Ordinance tree, Remove for new sidewalk	Remove tree, Provide 3" replacement
389	14455 Memorial	3" Savannah Holly	Ordinance tree, Remove for new sidewalk	Remove tree, Provide 3" replacement
390	14455 Memorial	3" Savannah Holly	Ordinance tree, Remove for new sidewalk	Remove tree, Provide 3" replacement
391	14455 Memorial	3" Savannah Holly	Ordinance tree, Remove for new sidewalk	Remove tree, Provide 3" replacement
392	14455 Memorial	3" Savannah Holly	Ordinance tree, Remove for new sidewalk	Remove tree, Provide 3" replacement
393	14455 Memorial	3" Savannah Holly	Ordinance tree, Remove for new sidewalk	Remove tree, Provide 3" replacement
394	14455 Memorial	3" Savannah Holly	Ordinance tree, Remove for new sidewalk	Remove tree, Provide 3" replacement
395	14455 Memorial	3" Savannah Holly	Ordinance tree, Remove for new sidewalk	Remove tree, Provide 3" replacement

NOTE:
1. THIS TREE PROTECTION PLAN WAS DEVELOPED WITH INFORMATION PROVIDED BY DESIGN ENGINEER IN DRAWINGS DATED AUGUST 2014. THE PLAN CONSIDERS ALL FITTINGS, VERTICAL OFFSETS AND AREAS OF NECESSARY EXCAVATION. CHANGES MADE TO DESIGN MAY COMPROMISE THE TREE PROTECTION PLAN. REFER TO SPECIFICATIONS 01562 AND 02915. CONDITION OF EACH TREE IS BASED ON VISUAL EVALUATION AT TIME OF DESIGN. CONDITION AND STRUCTURAL INTEGRITY OF EACH TREE IS NOT GUARANTEED BY DESIGNER AT ANY POINT IN THE FUTURE. AS ENVIRONMENTAL AND MAINTENANCE INFLUENCES ON EACH TREE CAN NOT BE DETERMINED BY DESIGNER.
2. THE CONTRACTOR'S ARBORIST WILL MARK LOCATIONS OF THE NEW TREES AND OBTAIN APPROVAL BY THE CITY ENGINEER AND CITY FORESTER BEFORE PURCHASING AND PLANTING TREES.

TREE PRESERVATION PLAN LEGEND

- TREE NUMBER/LOCATION
- TREE TO BE REMOVED
- TREE PROTECTION FENCE
- ROOT PRUNING TRENCH
- REPLACEMENT PLANTING SPECIES AND SIZE/TYPE
- ZERO CUTBACK CURB
- SIDEWALK ON GRADE
- CHECKERPLATE SECTION

Texas Department of Transportation ©2013

CivilTech Engineering, Inc.
11821 Telge Road
Cypress, Texas 77429
(281) 304-0200 Fax (281) 304-0210
Registration No. F-382

C.N. Koehl Urban Forestry, Inc.
210 Stone Bush Ct. • Katy, Texas 77493
281-391-0022 ckoehl@koehlurbanforestry.com

APPROVED: Craig N. Koehl 8/18/14

SURVEYED BY: WGC FB No. P-5779

CITY OF HOUSTON
DEPARTMENT OF PUBLIC WORKS AND ENGINEERING

MEMORIAL DRIVE
PAVING AND DRAINAGE IMPROVEMENTS

TREE PROTECTION PLAN
SHEET 6 OF 11

WBS NUMBER
N-000798-0001-4
DRAWING SCALE
CITY OF HOUSTON PM
MICHELLE RANDON, P.E.
SHEET No. 192 OF 358

53954

CivilTech Engineering, Inc.
C:\Users\rnob\Desktop\MEMORIAL\TEX\Gulfton Memorial\158-CivilTech_Memorial_PP-6.dwg Aug 21, 2014

REV	DESCRIPTION	BY	DATE

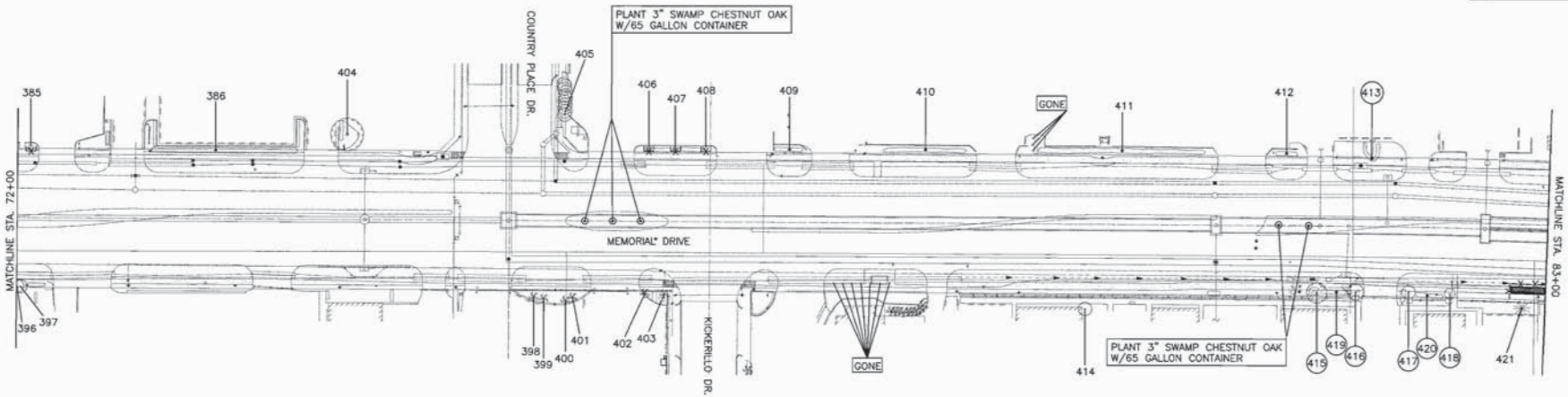

Tree No.	Location	Description	Comments	Treatment
385	14490 Memorial	4" Live Oak	Private tree	Fence, Clearance prune
386	Not available	3' Ligustrum Hedge	Not ordinance tree	Clearance prune and/or remove as necessary for new walk
396	14407 Memorial	3' Palm	Private tree	Clearance prune
397	14407 Memorial	3' Palm	Private tree	Clearance prune
398	14403 Memorial	4' Sago	Private tree, will not be impacted	
399	14403 Memorial	4' Sago	Private tree, will not be impacted	
400	14403 Memorial	4' Sago	Private tree, will not be impacted	
401	14403 Memorial	4' Sago	Private tree, will not be impacted	
402	14403 Memorial	4' Sago	Private tree, will not be impacted	
403	14403 Memorial	4' Sago	Private tree, will not be impacted	
404	Not available	5" Crepe Myrtle	Private tree, will not be impacted	
405	14090 Memorial	1' Dwarf Yaupon	Not ordinance tree	
406	14050 Memorial	7" Live Oak	Topped by utility, Private tree	Fence, Clearance prune
407	14050 Memorial	7" Live Oak	Topped by utility, Private tree	Fence, Clearance prune
408	14050 Memorial	7" Live Oak	Topped by utility, Private tree	Fence, Clearance prune
409	14344 Memorial	4' Redtip Hedge	Private tree, will not be impacted	
410	14344 Memorial	4' Redtip Hedge	Private tree, will not be impacted	
411	14340 Memorial	4' Redtip Hedge	Private tree, will not be impacted	
412	14340 Memorial	4' Redtip Hedge	Private tree, will not be impacted	
413	14340 Memorial	4' Juniper Hedge	Not ordinance tree	Clearance prune and/or remove as necessary for new walk
414	14333 Memorial	7' Live Oak	Private tree, will not be impacted	
415	14333 Memorial	5' Ligustrum	Not ordinance tree, remove for walk	Remove tree, No replacement required
416	14332 Memorial	4' Ligustrum Hedge	Not ordinance tree, remove for walk	Remove tree, No replacement required
417	14333 Memorial	5' Ligustrum	Not ordinance tree, remove for walk	Remove tree, No replacement required
418	14333 Memorial	4' Ligustrum Hedge	Not ordinance tree, remove for walk	Remove tree, No replacement required
419	14333 Memorial	5' Ligustrum	Not ordinance tree, remove for walk	Remove tree, No replacement required
420	14333 Memorial	4' Ligustrum Hedge	Not ordinance tree, remove for walk	Remove tree, No replacement required
421	14333 Memorial	17" Pine	Utility pruned, Private tree	Demo-Form-Pour walk without damage to tree roots 1" or larger, Fence

NOTE:

1. THIS TREE PROTECTION PLAN WAS DEVELOPED WITH INFORMATION PROVIDED BY DESIGN ENGINEER IN DRAWINGS DATED AUGUST 2014. THE PLAN CONSIDERS ALL FITTINGS, VERTICAL OFFSETS AND AREAS OF NECESSARY EXCAVATION. CHANGES MADE TO DESIGN MAY COMPROMISE THE TREE PROTECTION PLAN. REFER TO SPECIFICATIONS 01562 AND 02915. CONDITION OF EACH TREE IS BASED ON VISUAL EVALUATION AT TIME OF DESIGN. CONDITION AND STRUCTURAL INTEGRITY OF EACH TREE IS NOT GUARANTEED BY DESIGNER AT ANY POINT IN THE FUTURE, AS ENVIRONMENTAL AND MAINTENANCE INFLUENCES ON EACH TREE CAN NOT BE DETERMINED BY DESIGNER.
2. THE CONTRACTOR'S ARBORIST WILL MARK LOCATIONS OF THE NEW TREES AND OBTAIN APPROVAL BY THE CITY ENGINEER AND CITY FORESTER BEFORE PURCHASING AND PLANTING TREES.

TREE PRESERVATION PLAN LEGEND

- TREE NUMBER/LOCATION
- TREE TO BE REMOVED
- TREE PROTECTION FENCE
- ROOT PRUNING TRENCH
- REPLACEMENT PLANTING SPECIES AND SIZE/TYPE
- ZERO CUTBACK CURB
- SIDEWALK ON GRADE
- CHECKERPLATE SECTION

Texas Department of Transportation ©2013

CivilTech Engineering, Inc.
11821 Telge Road
Cypress, Texas 77429
(281) 304-0200 Fax (281) 304-0210
Registration No. F-382

C.N. Koehl Urban Forestry, Inc.
210 Stone Bush Ct. • Katy, Texas 77493
281-391-0022 ckoehl@koehlurbanforestry.com

APPROVED: Craig N. Koehl 8/18/14

SURVEYED BY: WGC FB No. P-5779

CITY OF HOUSTON
DEPARTMENT OF PUBLIC WORKS AND ENGINEERING

MEMORIAL DRIVE
PAVING AND DRAINAGE IMPROVEMENTS

TREE PROTECTION PLAN
SHEET 7 OF 11

WBS NUMBER
N-000798-0001-4
DRAWING SCALE
CITY OF HOUSTON PM
MICHELLE RANDON, P.E.
SHEET No. 193 OF 358

53954

CivilTech Engineering, Inc.
G:\Users\cack\Desktop\LINK\KDA\Civiltech Memorial\159-CivilTech_Memorial_09-7.dwg Aug 21, 2014

REV	DESCRIPTION	BY	DATE

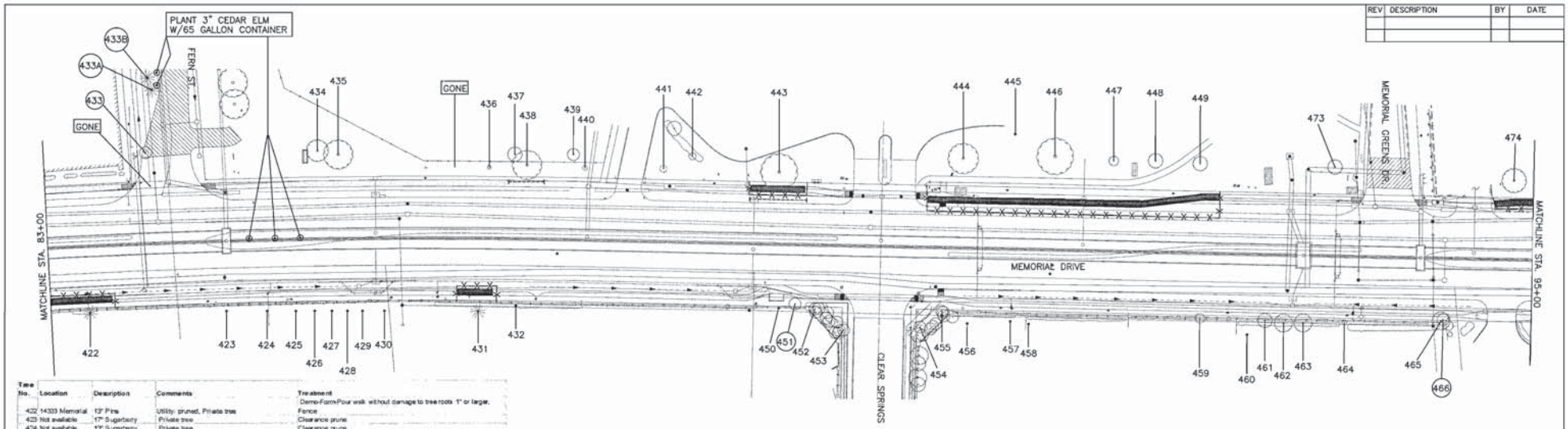

Tree No.	Location	Description	Comments	Treatment
422	14303 Memorial	13" Pine	Utility: pruned, Private tree	Demo-Form-Pour walk without damage to tree roots 1" or larger, Fence
423	Not available	17" Sugarberry	Private tree	Clearance prune
424	Not available	13" Sugarberry	Private tree	Clearance prune
425	Not available	9" Magnolia	50% dieback , Private tree	Clearance prune
426	Not available	9" Magnolia	50% dieback , Private tree	Clearance prune
427	Not available	9" Magnolia	50% dieback , Private tree	Clearance prune
428	Not available	9" Magnolia	50% dieback , Private tree	Clearance prune
429	Not available	9" Magnolia	50% dieback , Private tree	Clearance prune
430	Not available	12" Bradford Pear	Private tree	Clearance prune
431	Not available	23" Pine	Utility: pruned, Private tree	Demo-Form-Pour walk without damage to tree roots 1" or larger, Fence
432	Not available	27" Live Oak	Utility: pruned, Private tree	Demo-Form-Pour walk without damage to tree roots 1" or larger, Fence, Clearance prune
433	14330 Memorial	9" Persimmon	Not ordinance tree, remove for street	Remove tree, No replacement required
433A	14330 Memorial	25" Pine	Ordinance tree, Remove for storm	Remove tree, Provide 25" in replacement
433B	14330 Memorial	24" Pine	Ordinance tree, Remove for storm	Remove tree, Provide 24" in replacement
434	14230 Memorial	16" Post Oak	Private tree, will not be impacted	
435	14230 Memorial	21" Post Oak	Private tree, will not be impacted	
436	14230 Memorial	2" Baldcypress	Private tree, will not be impacted	
437	14230 Memorial	14" Water Oak	Private tree, will not be impacted	
438	14230 Memorial	17" Water Oak	Utility: pruned, Private tree	
439	14230 Memorial	5" Lead Tree	Private tree, will not be impacted	
440	14230 Memorial	3" Baldcypress	Private tree, will not be impacted	
441	14230 Memorial	7" Baldcypress	Private tree, will not be impacted	
442	14230 Memorial	7" Baldcypress	Private tree, will not be impacted	
443	14230 Memorial	28" Live Oak	Private tree	Root prune for street, Demo-Form-Pour walk without damage to tree roots 1" or larger, Fence
444	14230 Memorial	26" Live Oak	40% dieback , Impacted by drive construction, Private tree	Root prune for street, Demo-Form-Pour walk without damage to tree roots 1" or larger, Fence
445	14230 Memorial	15" Live Oak	50% dieback , Impacted by drive construction, Private tree	
446	14230 Memorial	25" Live Oak	25% dieback , Impacted by drive construction, Private tree	Demo-Form-Pour walk without damage to tree roots 1" or larger, Fence, Clearance prune
447	14230 Memorial	11" Live Oak	25% dieback , Impacted by drive construction, Private tree	Demo-Form-Pour walk without damage to tree roots 1" or larger, Fence
448	14230 Memorial	10" Live Oak	30% dieback , Impacted by drive construction, Private tree	Demo-Form-Pour walk without damage to tree roots 1" or larger, Fence
449	14230 Memorial	12" Live Oak	20% dieback , Impacted by drive construction, Private tree	Demo-Form-Pour walk without damage to tree roots 1" or larger, Fence
450	Not available	16" Mulberry	Not ordinance tree	Clearance prune
451	Not available	13" Holly	Topped by utility, Ordinance tree	Remove tree, Provide 13" replacement
452	Not available	7" Crape Myrtle	Not ordinance tree	
453	Not available	7" Crape Myrtle	Not ordinance tree	
454	Not available	7" Crape Myrtle	Not ordinance tree	
455	Not available	7" Crape Myrtle	Not ordinance tree	
456	Not available	17" Water Oak	Utility: pruned, Private tree	Clearance prune
457	Not available	8" Live Oak	Private tree	Clearance prune
458	Not available	19" American Elm	Private tree	Clearance prune
459	Not available	8" Redbp	Not ordinance tree	Clearance prune
460	Not available	25" Live Oak	Utility: pruned, Private tree	Clearance prune
461	Not available	11" Sugarberry	Not ordinance tree	Clearance prune
462	Not available	10" Sugarberry	Private tree	Clearance prune
463	Not available	13" Mulberry	Utility: pruned, Private tree	Clearance prune
464	Not available	14" Sugarberry	Utility: pruned, Private tree	Clearance prune
465	Not available	11" Sugarberry	Utility: pruned, Private tree	Clearance prune
466	Not available	8" Redbp	Not ordinance tree, remove for walk	Remove tree, No replacement required
467	14201 Memorial	4" Italian Cypress	Private tree, will not be impacted	
468	14201 Memorial	4" Italian Cypress	Private tree, will not be impacted	
469	14201 Memorial	13" Pine	Private tree, will not be impacted	
470	Not available	5" Live Oak	Private tree, will not be impacted	
471	Not available	7" Persimmon	Private tree, will not be impacted	
472	Not available	8" Sugarberry	Private tree, will not be impacted	
472A	Not available	13" Pine	Ordinance tree, Remove for new street and drive	Remove tree, Provide 13" in replacement
473	14230 Memorial	12" Live Oak	Private tree, will not be impacted	
474	14230 Memorial	26" Shumard Oak	Private tree	Demo-Form-Pour walk without damage to tree roots 1" or larger, Fence

NOTE:

1. THIS TREE PROTECTION PLAN WAS DEVELOPED WITH INFORMATION PROVIDED BY DESIGN ENGINEER IN DRAWINGS DATED AUGUST 2014. THE PLAN CONSIDERS ALL FITTINGS, VERTICAL OFFSETS AND AREAS OF NECESSARY EXCAVATION. CHANGES MADE TO DESIGN MAY COMPROMISE THE TREE PROTECTION PLAN. REFER TO SPECIFICATIONS 01562 AND 02915. CONDITION OF EACH TREE IS BASED ON VISUAL EVALUATION AT TIME OF DESIGN. CONDITION AND STRUCTURAL INTEGRITY OF EACH TREE IS NOT GUARANTEED BY DESIGNER AT ANY POINT IN THE FUTURE, AS ENVIRONMENTAL AND MAINTENANCE INFLUENCES ON EACH TREE CAN NOT BE DETERMINED BY DESIGNER.
2. THE CONTRACTOR'S ARBORIST WILL MARK LOCATIONS OF THE NEW TREES AND OBTAIN APPROVAL BY THE CITY ENGINEER AND CITY FORESTER BEFORE PURCHASING AND PLANTING TREES.

TREE PRESERVATION PLAN LEGEND

- TREE NUMBER/LOCATION
- TREE TO BE REMOVED
- TREE PROTECTION FENCE
- ROOT PRUNING TRENCH
- REPLACEMENT PLANTING SPECIES AND SIZE/TYPE
- ZERO CUTBACK CURB
- SIDEWALK ON GRADE
- CHECKERPLATE SECTION

Texas Department of Transportation ©2013

CivilTech Engineering, Inc.
11821 Telge Road
Cypress, Texas 77429
(281) 304-0200 Fax (281) 304-0210
Registration No. F-382

C.N. Koehl Urban Forestry, Inc.
210 Stone Bush Ct. • Katy, Texas 77493
281-391-0022 ckoehl@koehlurbanforestry.com

APPROVED: Craig N. Koehl 8/18/14

SURVEYED BY: WGC FB No. P-5779

CITY OF HOUSTON
DEPARTMENT OF PUBLIC WORKS AND ENGINEERING

MEMORIAL DRIVE
PAVING AND DRAINAGE IMPROVEMENTS

TREE PROTECTION PLAN
SHEET 8 OF 11

WBS NUMBER
N-000798-0001-4
DRAWING SCALE
CITY OF HOUSTON PM
MICHELLE RANDON, P.E.
SHEET No. 194 OF 358

CITY OF HOUSTON TEXAS 53954 CITY ENGINEER

CivilTech Engineering, Inc.
G:\Users\ck\Desktop\LIVE\EDA\CivilTech_Memorial\V60-CivilTech_Memorial_TP-8.dwg Aug 21, 2014

REV	DESCRIPTION	BY	DATE

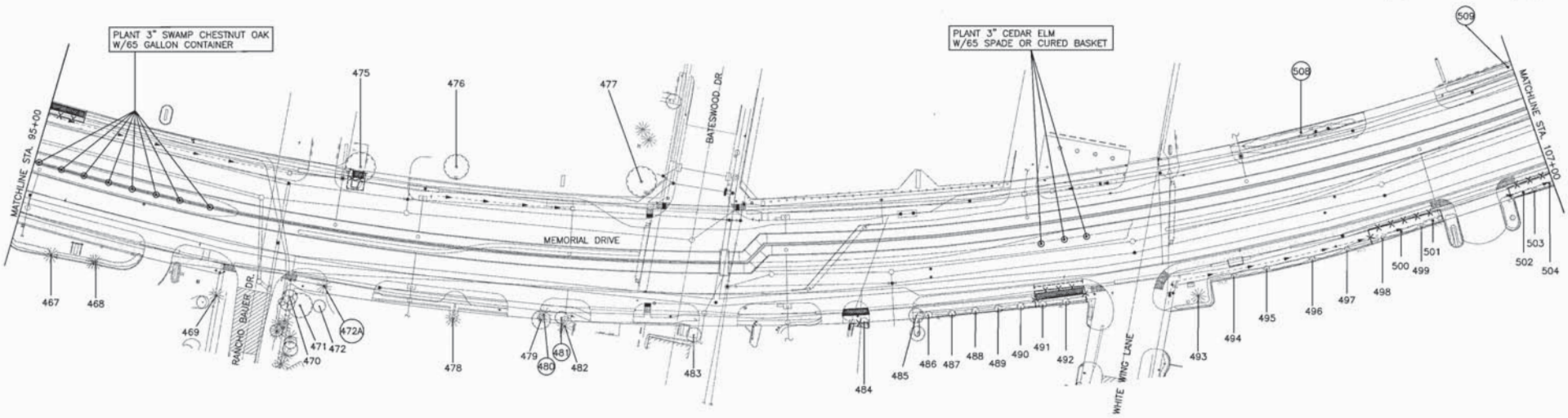

Tree No.	Location	Description	Comments	Treatment
467	14201 Memorial	4" Italian Cypress	Private tree, will not be impacted	
468	14201 Memorial	4" Italian Cypress	Private tree, will not be impacted	
469	14201 Memorial	13" Pine	Private tree, will not be impacted	
470	Not available	5" Live Oak	Private tree, will not be impacted	
471	Not available	7" Persimmon	Private tree, will not be impacted	
472	Not available	8" Sugarberry	Private tree, will not be impacted	
472A	Not available	13" Pine	Ordinance tree, Remove for new street and drive	Remove tree, Provide 13" in replacement
473	14230 Memorial	12" Live Oak	Private tree, will not be impacted	
474	14230 Memorial	26" Shumard Oak	Private tree	Demo-Form-Pour walk without damage to tree roots 1" or larger, Fence
475	St. Thomas	18" Green Ash	Stump sprouts, 4 trunk, Private tree	Root prune for street, Demo-Form-Pour walk without damage to tree roots 1" or larger, Fence, Clearance prune
476	St. Thomas	17" Laurel Oak	Private tree, will not be impacted	
477	St. Thomas	23" Willow Oak	30% dieback, Private tree	
478	Not available	17" Pine	Private tree, will not be impacted	
479	Not available	13" Persimmon	Utility pruned, Private tree	Clearance prune
480	Not available	13" Pine	70% removed by utility, Poor, Remove for walk	Remove tree, No replacement required
481	Not available	8" Persimmon	Not ordinance tree, remove for walk	Remove tree, No replacement required
482	Not available	13" Pine	60% removed by utility, Private, will not be impacted	
483	Not available	13" Live Oak	Private tree	Clearance prune
484	14117 Memorial	9" Live Oak	Utility pruned, Private tree	Demo-Form-Pour walk without damage to tree roots 1" or larger, Fence, Clearance prune
485	14117 Memorial	8" Crepe Myrtle	Not ordinance tree	Clearance prune
486	14117 Memorial	8" Crepe Myrtle	Not ordinance tree	Clearance prune
487	14117 Memorial	8" Crepe Myrtle	Not ordinance tree	Clearance prune
488	14117 Memorial	8" Crepe Myrtle	Not ordinance tree	Clearance prune
489	14117 Memorial	8" Crepe Myrtle	Not ordinance tree	Clearance prune
490	14117 Memorial	8" Crepe Myrtle	Not ordinance tree	Clearance prune
491	14117 Memorial	8" Crepe Myrtle	Not ordinance tree	Clearance prune
492	14117 Memorial	11" Live Oak	Ordinance tree	Root prune for street, Demo-Form-Pour walk without damage to tree roots 1" or larger, Fence, Clearance prune
493	14071 Memorial	21" Pine	40% dieback, Private tree, Will not be impacted	
494	14071 Memorial	5" Holly	Private tree, will not be impacted	
495	14071 Memorial	5" Holly	Private tree, will not be impacted	
496	14071 Memorial	5" Holly	Private tree, will not be impacted	
497	14071 Memorial	5" Holly	Private tree, will not be impacted	
498	14071 Memorial	5" Holly	Ordinance tree	Fence
499	14071 Memorial	5" Holly	Ordinance tree	Fence
500	14071 Memorial	5" Holly	Ordinance tree	Fence
501	14071 Memorial	5" Holly	Ordinance tree	Fence
502	14071 Memorial	5" Holly	Ordinance tree	Fence
503	14071 Memorial	5" Holly	Ordinance tree	Fence
504	14071 Memorial	5" Holly	Ordinance tree	Fence
505	14071 Memorial	5" Holly	Ordinance tree	Fence
506	14071 Memorial	5" Holly	Ordinance tree	Fence
507	14071 Memorial	5" Holly	Private tree, will not be impacted	
508	Not available	2" Hawthorne Hedge	Not ordinance tree, remove or clearance for walk	Remove tree or Clearance prune, No replacement required
509	Not available	2" Hawthorne Hedge	Not ordinance tree, remove or clearance for walk	Remove tree or Clearance prune, No replacement required

NOTE:

1. THIS TREE PROTECTION PLAN WAS DEVELOPED WITH INFORMATION PROVIDED BY DESIGN ENGINEER IN DRAWINGS DATED AUGUST 2014. THE PLAN CONSIDERS ALL FITTINGS, VERTICAL OFFSETS AND AREAS OF NECESSARY EXCAVATION. CHANGES MADE TO DESIGN MAY COMPROMISE THE TREE PROTECTION PLAN. REFER TO SPECIFICATIONS 01562 AND 02915. CONDITION OF EACH TREE IS BASED ON VISUAL EVALUATION AT TIME OF DESIGN. CONDITION AND STRUCTURAL INTEGRITY OF EACH TREE IS NOT GUARANTEED BY DESIGNER AT ANY POINT IN THE FUTURE, AS ENVIRONMENTAL AND MAINTENANCE INFLUENCES ON EACH TREE CAN NOT BE DETERMINED BY DESIGNER.
2. THE CONTRACTOR'S ARBORIST WILL MARK LOCATIONS OF THE NEW TREES AND OBTAIN APPROVAL BY THE CITY ENGINEER AND CITY FORESTER BEFORE PURCHASING AND PLANTING TREES.

TREE PRESERVATION PLAN LEGEND

- 1 — TREE NUMBER/LOCATION
- (1) — TREE TO BE REMOVED
- -X-X- — TREE PROTECTION FENCE
- ROOT PRUNING TRENCH
- (⊙) — REPLACEMENT PLANTING SPECIES AND SIZE/TYPE
- OCC — ZERO CUTBACK CURB
- SIDEWALK ON GRADE
- CHECKERPLATE SECTION

Texas Department of Transportation ©2013

CivilTech Engineering, Inc.
11821 Telge Road
Cypress, Texas 77429
(281) 304-0200 Fax (281) 304-0210
Registration No. F-382

C.N. Koehl
Urban Forestry, Inc.
210 Stone Bush Ct. • Katy, Texas 77493
281-391-0022 ckoehl@koehlurbanforestry.com

APPROVED: Craig N. Koehl 8/18/14

SURVEYED BY: WGC FB No. P-5779

CITY OF HOUSTON
DEPARTMENT OF PUBLIC WORKS AND ENGINEERING

MEMORIAL DRIVE
PAVING AND DRAINAGE IMPROVEMENTS

TREE PROTECTION PLAN
SHEET 9 OF 11

WBS NUMBER
N-000798-0001-4
DRAWING SCALE
CITY OF HOUSTON PM
MICHELLE RANDON, P.E.
SHEET No. 195 OF 358

53954

CivilTech Engineering, Inc.
C:\Users\mdb\Desktop\JAKE\CEN\Drafted\ Memorial\151-Draft\ch_Memorial_TP-5.dwg Aug 21, 2014

REV	DESCRIPTION	BY	DATE

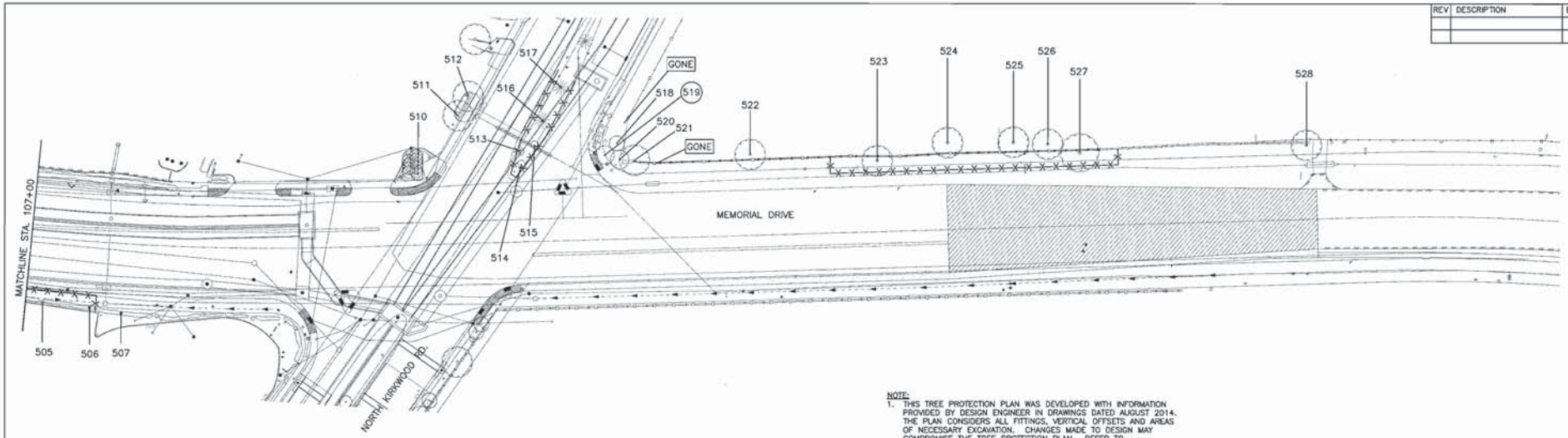

NOTE:

1. THIS TREE PROTECTION PLAN WAS DEVELOPED WITH INFORMATION PROVIDED BY DESIGN ENGINEER IN DRAWINGS DATED AUGUST 2014. THE PLAN CONSIDERS ALL FITTINGS, VERTICAL OFFSETS AND AREAS OF NECESSARY EXCAVATION. CHANGES MADE TO DESIGN MAY COMPROMISE THE TREE PROTECTION PLAN. REFER TO SPECIFICATIONS 01562 AND 02915. CONDITION OF EACH TREE IS BASED ON VISUAL EVALUATION AT TIME OF DESIGN. CONDITION AND STRUCTURAL INTEGRITY OF EACH TREE IS NOT GUARANTEED BY DESIGNER AT ANY POINT IN THE FUTURE, AS ENVIRONMENTAL AND MAINTENANCE INFLUENCES ON EACH TREE CAN NOT BE DETERMINED BY DESIGNER.
2. THE CONTRACTOR'S ARBORIST WILL MARK LOCATIONS OF THE NEW TREES AND OBTAIN APPROVAL BY THE CITY ENGINEER AND CITY FORESTER BEFORE PURCHASING AND PLANTING TREES.

Tree No.	Location	Description	Comments	Treatment
510	14002 Memorial	1" Nandina	Not ordinance tree	
511	14002 Memorial	2" Chinese Privet	Private tree, will not be impacted	
512	14002 Memorial	2" Chinese Privet	Private tree, will not be impacted	
513	Esplanade	8" Crepe Myrtle	Not ordinance tree	
514	Esplanade	5" Crepe Myrtle	Not ordinance tree	
515	Esplanade	5" Crepe Myrtle	Not ordinance tree	
516	Esplanade	17" Pine	Ordinance tree	Fence, Bore waterline
517	Esplanade	14" Pine	Dead	To be addressed by COH Parks & Rec Dept
518	Not available	11" Ligustrum	Not ordinance tree	Clearance prune
519	Not available	3" Ligustrum	Not ordinance tree, Remove for fire hydrant	Remove tree, No replacement required
520	Not available	13" Sugarberry	Butt rot, Not ordinance tree	To be addressed by COH Parks & Rec Dept
521	Not available	4" Ligustrum	Not ordinance tree	
522	Not available	22" Post Oak	Private tree	Clearance prune
523	Not available	34" Post Oak	30% dieback, Ordinance tree	Fence, Clearance prune
524	Not available	23" Post Oak	Private tree	Fence, Clearance prune
525	Not available	18" Post Oak	25% dieback, Private tree	Fence, Clearance prune
526	Not available	17" Willow Oak	25% dieback, Private tree	Fence, Clearance prune
527	Not available	23" Post Oak	Ordinance tree	Fence, Clearance prune
528	Not available	13" Sugarberry	Not ordinance tree	Clearance prune

TREE PRESERVATION PLAN LEGEND

- TREE NUMBER/LOCATION
- TREE TO BE REMOVED
- TREE PROTECTION FENCE
- ROOT PRUNING TRENCH
- REPLACEMENT PLANTING SPECIES AND SIZE/TYPE
- ZERO CUTBACK CURB
- SIDEWALK ON GRADE
- CHECKERPLATE SECTION

Texas Department of Transportation ©2013

CivilTech Engineering, Inc.
11821 Telge Road
Cypress, Texas 77429
(281) 304-0200 Fax (281) 304-0210
Registration No. F-382

C.N. Koehl
Urban Forestry, Inc
210 Stone Bush Ct. • Katy, Texas 77493
281-391-0022 ckoehl@koehlurbanforestry.com

APPROVED: Craig N. Koehl 8/18/14

SURVEYED BY: WGC FB No. P-5779

CITY OF HOUSTON
DEPARTMENT OF PUBLIC WORKS AND ENGINEERING

MEMORIAL DRIVE
PAVING AND DRAINAGE IMPROVEMENTS

TREE PROTECTION PLAN
SHEET 10 OF 11

WBS NUMBER
N-000798-0001-4
DRAWING SCALE
CITY OF HOUSTON PM
MICHELLE RANDON, P.E.
SHEET No. 196 OF 358

53954

CivilTech Engineering, Inc.
C:\Users\ckoeh\Desktop\LINEVIEW\Civiltech Memorial\183-CivilTech_Memorial_TP-10.dwg Aug 21, 2014

REV	DESCRIPTION	BY	DATE

Tree Removal List

Tree No.	Description		Replacement requirement
31	Not available	11" Pine	11
54A	15015 Memorial	17" Post Oak	0
93	15015 Memorial	11" Water Oak	11
96	15015 Memorial	13" Water Oak	13
129	Memorial Oaks Cemetery	4" Ligustrum	0
133	14938 Kimberly	1" Rose	0
134	14938 Kimberly	1" Rose	0
136	14935 Kimberly	3" Crepe Myrtle	0
137	14935 Kimberly	3" Crepe Myrtle	0
155	Not available	17" Pine	17
173	Not available	10" Shumard Oak	10
175	Not available	5" Cherrylaurel	0
176	Not available	5" Cherrylaurel	0
189	Not available	11" Pine	0
192	Not available	5" Sugarberry	0
199	14922 Perthshire	6" Ligustrum	0
208	14903 Perthshire	22" Pine	22
210	14903 Perthshire	11" Gum Bumelia	11
214	14900 Memorial	3" Variegated Pittosporum	0
219	14900 Memorial	20" Live Oak	20
247	14781 Memorial	4" Ligustrum Hedge	0
252	14770 Memorial	4" Crepe Myrtle	0
255	14754 Memorial	4" Sago	0
257	14763 Memorial	4" Ligustrum Hedge	0
258	14763 Memorial	4" Ligustrum Hedge	0
259	14763 Memorial	4" Ligustrum Hedge	0
260	14763 Memorial	4" Ligustrum Hedge	0
261	14763 Memorial	4" Ligustrum Hedge	0
262	14763 Memorial	4" Ligustrum Hedge	0
263	14763 Memorial	4" Ligustrum Hedge	0
264	14763 Memorial	4" Ligustrum Hedge	0
265	14763 Memorial	4" Ligustrum Hedge	0
266	14763 Memorial	4" Ligustrum Hedge	0
267	14763 Memorial	4" Ligustrum Hedge	0
268	14763 Memorial	4" Ligustrum Hedge	0
269	14763 Memorial	4" Ligustrum Hedge	0
270	14763 Memorial	4" Ligustrum Hedge	0
271	14763 Memorial	4" Ligustrum Hedge	0
272	14763 Memorial	4" Ligustrum Hedge	0
273	14763 Memorial	4" Ligustrum Hedge	0
274	14763 Memorial	4" Ligustrum Hedge	0
275	14763 Memorial	4" Ligustrum Hedge	0
276	14763 Memorial	4" Ligustrum Hedge	0
277	14763 Memorial	4" Ligustrum Hedge	0
278	14763 Memorial	4" Ligustrum Hedge	0
279	14763 Memorial	4" Ligustrum Hedge	0
280	14763 Memorial	4" Ligustrum Hedge	0
281	14754 Memorial	4" Rectip Hedge	0
282	14754 Memorial	2" Hawthorne Hedge	0
283	14750 Memorial	20' Palm	0
284	14750 Memorial	20' Palm	0
285	14750 Memorial	30' Palm	0
287	14737 Memorial	2" Ligustrum	0
288	14737 Memorial	2' Palm	0
289	14737 Memorial	2" Ligustrum	0
290	14737 Memorial	2' Palm	0
291	14737 Memorial	2" Ligustrum	0
292	14737 Memorial	2' Palm	0
293	14737 Memorial	3' Palm	0
294	14737 Memorial	3" Ligustrum	0
296	Not available	6" Sago	0
295	Not available	6" Sago	0
309	14653 Memorial	4" Hawthorne	0
311	14650 Memorial	4" Hawthorne	0
316	Esplanade	13" Live Oak	13
347A	Esplanade	11" Live Oak	11
348A	Esplanade	13" Live Oak	13
353	14535 Memorial	12" Live Oak	12
354	14535 Memorial	13" Live Oak	13
355	14535 Memorial	7" Live Oak	7
356	14535 Memorial	12" Live Oak	12
357	14529 Memorial	5" Chinese Privet	0
359	14511 Memorial	9" Crepe Myrtle	0
360	14511 Memorial	6" Crepe Myrtle	0
361	14511 Memorial	6" Crepe Myrtle	0
387	14455 Memorial	3" Savannah Holly	3
388	14455 Memorial	3" Savannah Holly	3
389	14455 Memorial	3" Savannah Holly	3
390	14455 Memorial	3" Savannah Holly	3
391	14455 Memorial	3" Savannah Holly	3
392	14455 Memorial	3" Savannah Holly	3
393	14455 Memorial	3" Savannah Holly	3
394	14455 Memorial	3" Savannah Holly	3
395	14455 Memorial	3" Savannah Holly	3
433	14330 Memorial	9" Persimmon	6
433A	14330 Memorial	25" Pine	25
433B	14330 Memorial	24" Pine	24
461	Not available	13" Holly	13
466	Not available	8" Redtip	0
472A	Not available	13" Pine	13
480	Not available	13" Pine	0
481	Not available	8" Persimmon	0
508	Not available	2' Hawthorne Hedge	0
509	Not available	2' Hawthorne Hedge	0
519	Not available	3" Ligustrum	0
		TOTAL REPLACEMENT INCHES REQUIRED	298

Tree Replacement List

Quantity	Caliper Size	Species	Container/Tree Spade size
14	3	Cedar Elm (Ulmus crassifolia)	65 gallon container
5	3	Cedar Elm (Ulmus crassifolia)	65" spade or cured basket
22	3	Nuttall Oak (Quercus nuttallii)	65" spade or cured basket
2	3	Swamp Chestnut Oak (Quercus michauxii)	65" spade or cured basket
16	3	Swamp Chestnut Oak (Quercus michauxii)	65 gallon container
2	3	Live Oak (Quercus virginiana)	65" spade or cured basket
		TOTAL REPLACEMENT INCHES INCLUDED IN PLAN	183

NOTE: Tree replacement locations shown on plans must be coordinated with adjacent property owner and City of Houston Urban Forestry prior to excavation for planting. Coordination shall be completed by construction contractor's Certified Arborist. Trees to be maintained and watered for 2 years following planting per standard spec 02915. Timing of planting may be delayed in periods of drought with mandatory water restrictions in place–timing to be coordinated with City of Houston Urban Forestry. Trees in esplanade groupings to be planted in common bed with 4" of hardwood mulch between trees.

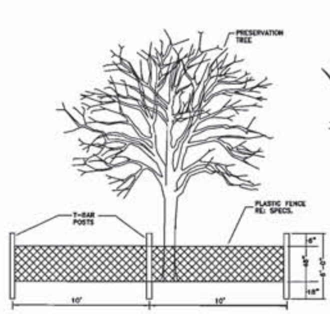

TREE PROTECTION FENCING DETAIL A
NOT TO SCALE

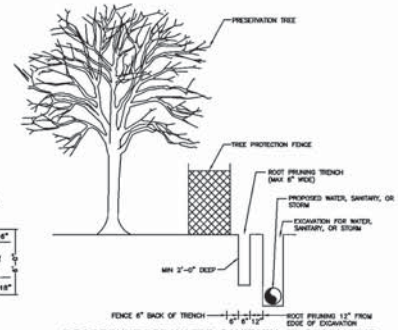

ROOT PRUNE FOR WATER, SANITARY, OR STORM LINE
NOT TO SCALE

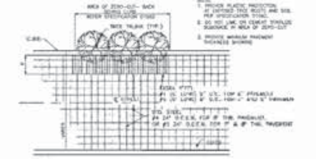

ZERO CURB CUTBACK DETAIL
EXTRA STEEL BEHIND CURB
NOT TO SCALE

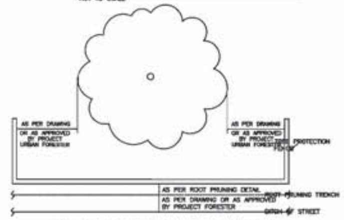

TREE PROTECTION FENCING DETAIL B
NOT TO SCALE

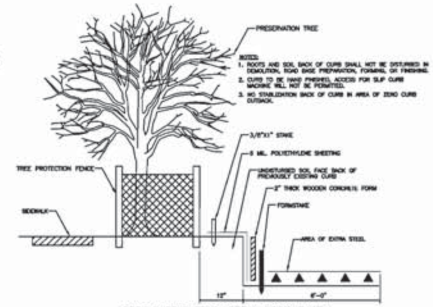

ZERO CURB CUTBACK DETAIL-PROFILE VIEW
NOT TO SCALE

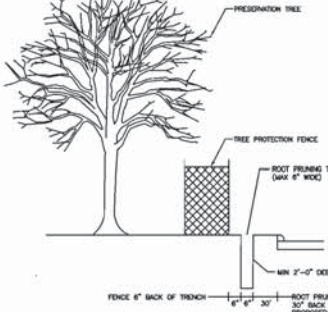

ROOT PRUNE FOR STREET-CURB & GUTTER - NO 0CC
NOT TO SCALE

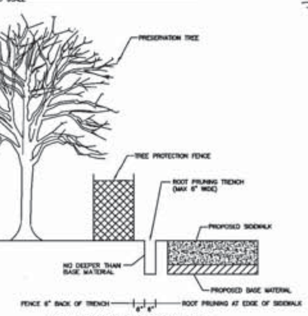

ROOT PRUNE FOR SIDEWALK
NOT TO SCALE

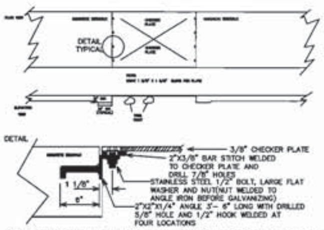

CHECKERPLATE DETAIL-SINGLE CONNECTION
NOT TO SCALE

NOTE:
ALL IRONWORK TO BE HOT DIPPED GALVANIZED EXCEPT AS NOTED.

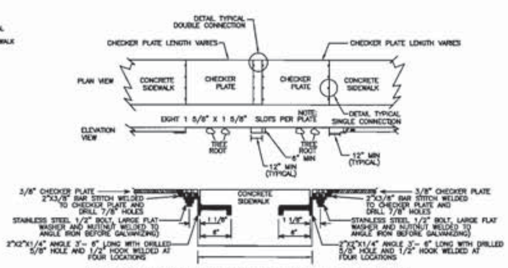

CHECKERPLATE DETAIL-DOUBLE CONNECTION
NOT TO SCALE

NOTE:
ALL IRONWORK TO BE HOT DIPPED GALVANIZED EXCEPT AS NOTED.

Texas Department of Transportation ©2013

CivilTech Engineering, Inc.
11821 Telge Road
Cypress, Texas 77429
(281) 304-0200 Fax (281) 304-0210
Registration No. F-382

C.N. Koehl
Urban Forestry, Inc.
210 Stone Bush Ct. • Katy, Texas 77493
281-391-0022 ckoehl@koehlurbanforestry.com

APPROVED: Craig N. Koehl 8/18/14

SURVEYED BY: WGC FB No. P-5779

CITY OF HOUSTON
DEPARTMENT OF PUBLIC WORKS AND ENGINEERING

MEMORIAL DRIVE
PAVING AND DRAINAGE IMPROVEMENTS

TREE PROTECTION PLAN
SHEET 11 OF 11

WBS NUMBER	
N-000798-0001-4	
DRAWING SCALE	
CITY OF HOUSTON PM	
MICHELLE RANDON, P.E.	
SHEET No. 197 OF 358	53954

CivilTech Engineering, Inc.
C:\Users\vedb\Desktop\LUKE\vEDb\CivilTech Memorial\163-CivilTech_Memorial_TP-11.dwg Aug 21, 2014