City of Houston
Department Of Public Works And Engineering
Engineering And Construction Division

PROJECT MANUAL
WHITEHEATHER DRAINAGE AND PAVING SUB-PROJECT IV
HOUSTON, TEXAS
WBS NO.: M-000262-0004-4

Divisions 00 through 16

APRIL 2012

STATE OF TEXAS
EPIFANIO E. SALAZAR JR.
67749
REGISTERED
PROFESSIONAL ENGINEER

4-13-2012

SES HORIZON CONSULTING ENGINEERS, INC.
TEXAS REGISTERED ENGINEERING FIRM F-003922

SES HORIZON
CONSULTING ENGINEERS, INC.
Civil Structural Transportation
10101 SOUTHWEST FREEWAY, SUITE 400
HOUSTON, TEXAS 77074
(TEL.) (713) 988-5504 (FAX.) (713) 988-1441

Document 00911

NOTICE OF
ADDENDUM NO. 1

Date of Addendum: 5/9/12

PROJECT NAME: Whiteheather Drainage And Paving Sub-Project IV

PROJECT NO: WBS No. M-000262-0004-4

BID DATE: May 17, 2012

FROM: Ravi Kaleyatodi, P.E., CPM, Senior Assistant Director
City of Houston, Department of Public Works and Engineering
611 Walker Street
Houston, Texas 77002
Attn: Isaac Muniz, E.I.T., Project Manager

STATE OF TEXAS
EPIFANIO E. SALAZAR JR.
67749
REGISTERED PROFESSIONAL ENGINEER
05-07-2012

TO: Prospective Bidders

The time of day and place for submittal of the bid remain the same.

The referenced Addendum forms a part of the Bidding Documents and will be incorporated into the Contract documents, as applicable.

Written questions regarding this Addendum may be submitted to the Project Manager following the procedures specified in Document 00200 – Instructions to Bidders. Immediately notify the City Engineer through the named Project Manager upon finding discrepancies or omissions in the Bid Documents.

This Addendum includes:

ADDENDUM SYNOPSIS

Changes to Project Manual
Bidding Requirements

Ravi Kaleyatodi

DATED: 5/9/12

Ravi Kaleyatodi,, P.E., CPM
Senior Assistant Director
Engineering Branch
Engineering and Construction Division

END OF DOCUMENT

Document 00910

ADDENDUM NO. 1

Date of Addendum: 5/9/12

PROJECT NAME: Whiteheather Drainage And Paving Sub-Project IV

PROJECT NO: WBS No. M-000262-0004-4

BID DATE: May 17, 2012

FROM: Carl Smitha, P.E., City Engineer
City of Houston, Department of Public Works and Engineering
1002 Washington Avenue
Houston, Texas 77002
IM Attn: Isaac Muniz, E.I.T., Project Manager

TO: Prospective Bidders

This Addendum forms a part of the Bidding Documents and will be incorporated into the Contract documents, as applicable. Insofar as the original Project Manual and Drawings are inconsistent, this Addendum governs.

This Addendum uses the change page method: remove and replace or add pages, or Drawing sheets, as directed in the change instructions below. Change bars (|) are provided in the outside margins of pages from the Project Manual to indicate where changes have been made; no change bars are provided in added Sections. Reissued Drawing Sheets show the Addendum number below the title block and changes in the Drawing are noted by a revision mark and enclosed in a revision cloud.

STATE OF TEXAS
EPIFANIO E. SALAZAR JR.
67749
REGISTERED
PROFESSIONAL ENGINEER
05-07-2012

SES HORIZON CONSULTING ENGINEERS, INC.
TEXAS REGISTERED ENGINEERING FIRM F-003922

ADDENDUM NO. 1

CHANGES TO PROJECT MANUAL

BIDDING REQUIREMENTS

1. Document 00410B – Bid Forms Part B: Delete these Documents in their entirety and replace them with the enclosed copies.

END OF ADDENDUM NO. 1

Ravi Kaleyatodi DATED: 5/9/12

Ravi Kaleyatodi, P.E., CPM
Senior Assistant Director
Engineering Branch
Engineering and Construction Division

END OF DOCUMENT

Document 00410A

BID FORM – PART B

1.0 TOTAL BID PRICE HAS BEEN CALCULATED BY BIDDER, USING THE FOLLOWING COMPONENT PRICES AND PROCESS (PRINT OR TYPE NUMERICAL AMOUNTS):

A. STIPULATED PRICE: **$ N/A**

(Total Bid Price; minus Base Unit Prices, Extra Unit Prices, Cash Allowances and All Alternates, if any)

B. BASE UNIT PRICE TABLE:

Item No.	Spec. Ref.	Base Unit Short Title	Unit of Measure	Estimated Quantity	Unit Price (this column controls)	Total in figures
1	01502	Mobilization	LS	1	$160,000.00 (1)	$160,000.00 (1)
2	01555	Traffic Control & Regulation	LS	1	$120,000.00 (2)	$120,000.00 (2)
3	01555	Provide and install low profile concrete barriers	LF	2,000		
4	01555	Relocate low profile concrete barriers	LF	2,000		
5	01555	Remove low profile concrete barriers	LF	2,000		
6	01555	Flagmen	LS	1	$93,528.00 (2)	$93,528.00 (2)
7	01555	Remove and Replace Permanent Type III Barricaide	EA	5		
8	02260	Trench safety system for trench excavations	LF	9,319		
9	01562	Tree and plant protection	LS	1		
10	Ref. Detail Drawing	Checker plate complete in place	SF	2,040		
11	01570	Inlet protection barrier	LF	2,318		
12	01570	Filter fabric fence	LF	19,388		

B. BASE UNIT PRICE TABLE:

Item No.	Spec. Ref.	Base Unit Short Title	Unit of Measure	Estimated Quantity	Unit Price (this column controls)	Total in figures
13	01575	Stabilized construction exit (install and remove)	SY	1,414		
14	01578	Ground water control for open-cut construction	LF	6,221		
15	02086	Adjust existing manhole frame and cover to new grade	EA	23		
16	02086	Adjust existing valve box to new grade	EA	20		
17	02221	Remove and dispose 4-inch diameter water line (all types of materials)	LF	215		
18	02221	Remove and dispose 6-inch diameter water line (all types of materials)	LF	223		
19	02221	Remove and dispose 8-inch diameter water line (all types of materials)	LF	35		
20	02221	Remove and dispose 12-inch diameter water line (all types of materials)	LF	483		
21	02221	Remove and dispose 18-inch diameter MRCP/RCP/CMP sewer	LF	632		
22	02221	Remove and dispose 21-inch diameter MRCP/RCP/CMP sewer	LF	65		
23	02221	Remove and dispose 24-inch diameter MRCP/RCP/CMP sewer	LF	59		
24	02221	Remove and dispose 30-inch diameter MRCP/RCP/CMP sewer	LF	1,318		
25	02221	Remove and dispose 36-inch diameter MRCP/RCP/CMP sewer	LF	341		
26	02221	Remove and dispose manhole	EA	18		
27	02221	Remove and dispose 18-inch diameter RCP/MRCP/CMP storm sewer lead	LF	410		
28	02221	Remove and dispose 24-inch diameter RCP/MRCP/CMP storm sewer lead	LF	115		
29	02221	Remove and dispose existing storm inlet	EA	30		

B. BASE UNIT PRICE TABLE:

Item No.	Spec. Ref.	Base Unit Short Title	Unit of Measure	Estimated Quantity	Unit Price (this column controls)	Total in figures
30	02221	Remove and dispose existing concrete wingwall	EA	2		
31	02222	Abandonment of sewers (18" diameter storm sewer)	LF	227		
32	02222	Abandonment of sewers (24" diameter storm sewer)	LF	720		
33	02222	Abandonment of sewers (36" diameter storm sewer)	LF	33		
34	02222	Abandonment of sewers (storm manholes)	EA	1		
35	02714	Flexible base course for temporary driveways (6-inch thick, install and remove) (residential)	EA	146		
36	02714	Flexible base course for temporary driveways (6-inch thick, install and remove) (commercial)	EA	9		
37	02741	Asphaltic Concrete Pavement (temporary cross street intersections) (2" surface, 8" base) (install and remove)	SY	4,812		
38	02821 and Document 01110	Remove, dispose and replace existing fence including gate structures (all types and heights)	LF	2,450		
39	02915	Tree planting	EA	19		
40	01562	Remove and dispose existing trees	EA	43		
41	01562	Zero curb cut operation	LF	409		
42	02915	Remove and relocate tree	EA	1		
43	02915	Remove, temporary store, and replant tree	EA	1		
44	02922	Sodding	SY	18,237		

B. BASE UNIT PRICE TABLE:

Item No.	Spec. Ref.	Base Unit Short Title	Unit of Measure	Estimated Quantity	Unit Price (this column controls)	Total in figures
45	01110	Relocate existing sprinklers - rotary head sprinkler	EA	10		
46	01110	Relocate existing sprinklers - spray head sprinkler	EA	10		
47	01110	Relocate irrigation pipe - all sizes	LF	20		
TOTAL BASE UNIT PRICES						

REST OF PAGE INTENTIONALLY LEFT BLANK

B. BASE UNIT PRICE TABLE:

UNIT PRICES FOR - PAVING

Item No.	Spec. Ref.	Base Unit Short Title	Unit of Measure	Estimated Quantity	Unit Price (this column controls)	Total in figures
48	02221	Remove and dispose of concrete sidewalks and driveways (all thicknesses)	SY	9,865		
49	02221	Remove and dispose of concrete pavement and base materials with or without asphalt surface and with or without curbs (all thicknesses)	SY	41,656		
50	02315	Roadway excavation	CY	5,338		
51	02336	Lime - For Stabilized Subgrade (6" Depth)	SY	35,378		
52	02336	Lime - For Stabilized Subgrade (8" Depth)	SY	16,991		
53	02336	Lime-Stabilized Subgrade (8% By Weight = 40 Lbs Per SY)	TON	1,048		
54	02581	Street lighting conduit (2-inch pvc, schedule 40)	LF	7,170		
55	02581	Street lighting conduit (2-inch pvc, schedule 80)	LF	820		
56	Drawings	Furnish and install 78.5" X 80" speed cushion (made of 100% recycled rubber and two-part polyurethane binder) including metal dowels, anchor bolts and installed as specified	EA	8		
57	01554	Furnish and install traffic sign and post @ speed cushion locations	EA	4		
58	02751	8-inch reinforced concrete pavement	SY	18,840		
59	02751	8-inch reinforced concrete pavement (high early strength)	SY	16,675		
60	02751	12-inch reinforced concrete pavement (high early strength)	SY	6,141		
61	02752	Board expansion joint with load transfer device and sealant.	LF	6,094		
62	02752	Horizontal dowels (24" long)	EA	279		
63	02752	Preformed expansion joints (for sidewalk behind back of curb)	LF	2,277		

B. BASE UNIT PRICE TABLE:

UNIT PRICES FOR - PAVING

Item No.	Spec. Ref.	Base Unit Short Title	Unit of Measure	Estimated Quantity	Unit Price (this column controls)	Total in figures
64	02754	6-inch concrete driveway, including excavation, subgrade/base material, sawcutting and all joints (construction, expansion and surface)	SF	39,613		
65	02754	7-inch concrete driveway, including excavation, subgrade/base material, sawcutting and all joints (construction, expansion and surface)	SF	1,362		
66	02762	Blast clean 4-inch wide roadway lane markings, all types	LF	12,195		
67	02762	Blast clean 8-inch wide roadway lane markings, all types	LF	160		
68	02762	Blast clean 12-inch wide roadway lane markings, all types	LF	572		
69	02762	Blast clean 24-inch wide roadway lane markings, all types	LF	1,702		
70	02762	Blast clean word, all types	EA	4		
71	02762	Blast clean symbol, all types	EA	4		
72	02764	Raised Reflective Pavement Markers (double sided) (Type II Blue-Blue), double reflectorized blue traffic markers shall be placed 6-inches offset of the centerline of all fire hydrant locations by the contractor, hydrants located at intersections shall have a button placed on each street	EA	22		
73	02764	Raised Reflective Pavement Markers Type II-A-A	EA	231		
74	02764	Raised Reflectorized White Pavement Markers Type II-C-C	EA	190		
75	02764	Raised Reflective Pavement Markers Type II-C-R	EA	32		
76	02764	Raised Nonreflectorized White Pavement Markers, Button	EA	32		
77	02765	Temporary and removable reflectorized pavement markings - yellow (4" wide), install and remove	LF	13,081		
78	02765	Temporary and removable reflectorized pavement markings - white (4" wide), install and remove	LF	802		

B. BASE UNIT PRICE TABLE:

UNIT PRICES FOR - PAVING

Item No.	Spec. Ref.	Base Unit Short Title	Unit of Measure	Estimated Quantity	Unit Price (this column controls)	Total in figures
79	02767	Thermoplastic pavement markings, 4-inch wide yellow solid	LF	9,470		
80	02767	Thermoplastic pavement markings, 4-inch wide white dashed	LF	2,725		
81	02767	Thermoplastic pavement markings, 8-inch wide white solid	LF	160		
82	02767	Thermoplastic pavement markings, 12-inch wide white solid	LF	392		
83	02767	Curb Surface Paint, 12-inch wide yellow solid	LF	180		
84	02767	Thermoplastic pavement markings, 24-inch wide white solid	LF	1,702		
85	02767	Thermoplastic pavement markings, Symbol	EA	4		
86	02767	Thermoplastic pavement markings, Word	EA	4		
87	02771	6-inch concrete curb	LF	19,358		
88	02771	7-inch and greater concrete curb (low profile retaining wall)	LF	180		
89	02775	4-1/2-inch concrete sidewalk	SF	82,934		
90	02775	Concrete curb ramp	SF	3,375		
91	1110/ 02506	3" PVC yard drain and all required fixtures	LF	120		
92	02221	Remove Existing Pole Foundation	EA	8		
93	02582	Pedestal Pole Assembly with Foundation	EA	6		
94	02582	25' Mast Arm Pole Assembly with Foundation	EA	3		
95	02582	30' Mast Arm Pole Assembly with Foundation	EA	3		
96	02893	Electrical Service Pedestal Assembly - 100 Amp ("Square D" Breakers Included)	EA	1		

B. BASE UNIT PRICE TABLE:

UNIT PRICES FOR - PAVING

Item No.	Spec. Ref.	Base Unit Short Title	Unit of Measure	Estimated Quantity	Unit Price (this column controls)	Total in figures
97	02893	Overhead Street Name Signs	EA	6		
98	02893	Sign, "One Way", R6-1, 36" x 12"	EA	4		
99	02893	Remove and Salvage Existing Traffic Signals	EA	1		
100	16710	Type "A" Pull Box with Apron, Gravel and Ground Rod	EA	8		
101	16710	Type "B" Pull Box with Apron, Gravel and Ground Rod	EA	10		
102	16711	Conduit, 2-IN SCH 80 PVC Trench	LF	121		
103	16711	Conduit, 2 1/2-IN SCH 80 PVC Trench	LF	22		
104	16711	Conduit, 3-IN SCH 80 PVC Trench	LF	1,001		
105	16712	Conduit, 3-IN SCH 80 PVC Bore	LF	110		
106	16711	Conduit, 2-IN SCH 80 PVC Bridge Mount	LF	94		
107	16711	Conduit, 4-IN SCH 80 PVC Trench	LF	451		
108	16711	Conduit, 4-IN SCH 80 PVC Bore	LF	429		
109	16715	3-Section Vehicle Signal Head Assembly (RYG)(Horizontal)	EA	12		
110	16719	LED Pedestrian Signal Head Assembly (Symbolic) (Countdown)	EA	12		
111	16720	Traffic Signal Cables, Detector Lead-In Cable 2/C-14 AWG IMSA 50-2-1984	LF	4,224		
112	16720	Traffic Signal Cables, 3/C-#14 AWG Solid Cable	LF	2,024		
113	16720	Traffic Signal Cables, 5/C-#14 AWG Solid Cable	LF	2,024		
114	16720	Traffic Signal Cables, 7/C-#14 AWG Solid Cable	LF	1,980		

B. BASE UNIT PRICE TABLE:

UNIT PRICES FOR - PAVING

Item No.	Spec. Ref.	Base Unit Short Title	Unit of Measure	Estimated Quantity	Unit Price (this column controls)	Total in figures
115	16720	#4 XHHW Service Wire	LF	22		
116	16720	#4 AWG Bare Solid Wire	LF	22		
117	16720	#8 AWG Bare Solid Wire	LF	677		
118	16724	Emergency Vehicle Preemption System	EA	1		
119	16727	Loop Detector Saw Cut with Loop Wire	LF	768		
120	16730	ITS Controller Cabinet Assembly (Model 340)(Type 2070L)	EA	1		
121	02893-10C	Controller Cabinet Foundation with Apron	EA	1		
122	16750	Accessible Pedestrian Pushbutton Station	EA	12		
TOTAL BASE UNIT PRICES FOR PAVING						

B. BASE UNIT PRICE TABLE:

UNIT PRICES FOR - STORM SEWER UTILITY

Item No.	Spec. Ref.	Base Unit Short Title	Unit of Measure	Estimated Quantity	Unit Price (this column controls)	Total in figures
123	02081 02082 02087	Type "C" manhole for 42-inch diameter and smaller sewers	EA	54		
124	02081 02082 02087	Type "C" manhole for 42-inch diameter and smaller sewers (extra depth)	LF	70		
125	02081 02082 02087	Type "C" manhole for 48-inch to 72-inch diameter sewers	EA	12		
126	02081 02082 02087	Type "C" manhole for 48-inch to 72"-inch diameter sewers (extra depth)	LF	21		
127	02081 02082 02087	Type "C" manhole for 78-inch diameter and greater sewers	EA	1		
128	02081 02082 02087	Type "C" manhole for 78"-inch diameter and greater sewers (extra depth)	LF	7		
129	02084	24-inch diameter ring grate	EA	1		
130	02631	24-inch diameter storm sewer by open cut (RCP)	LF	3,020		
131	02631	30-inch diameter storm sewer by open cut (RCP)	LF	990		
132	02631	36-inch diameter storm sewer by open cut (RCP)	LF	1,392		
133	02631	42-inch diameter storm sewer by open cut (RCP)	LF	1,293		
134	02631	48-inch diameter storm sewer by open cut (RCP)	LF	662		
135	02631	38-inch X 24-inch horizontal elliptical storm sewer by open cut (RCP)	LF	43		
136	02631	45-inch X 29-inch horizontal elliptical storm sewer by open cut (RCP)	LF	273		
137	02631	60-inch X 38-inch horizontal elliptical storm sewer by open cut (RCP)	LF	356		
138	02631	68-inch X 43-inch horizontal elliptical storm sewer by open cut (RCP)	LF	314		

B. BASE UNIT PRICE TABLE:

UNIT PRICES FOR - STORM SEWER UTILITY

Item No.	Spec. Ref.	Base Unit Short Title	Unit of Measure	Estimated Quantity	Unit Price (this column controls)	Total in figures
139	02631	24-inch diameter storm sewer leads	LF	820		
140	02631	30-inch diameter storm sewer leads	LF	58		
141	02632	Cast-in-place headwall and wingwalls	EA	2		
142	02633	Type "BB" inlet	EA	44		
143	02633	Type "C-1" inlet	EA	4		
144	02633	Type "C-2" inlet	EA	2		
145	02633	Type "C-2A" inlet	EA	4		
146	HCFCD 02364	Filter Dams (Type 3)	LF	200		
147	HCFCD 02376	Concrete channel lining (remove and replace existing concrete channel lining including all toewalls, seal slab, grade beams, joint materials, weep holes, geotextiles, saw cutting and appurtenances)	SY	520		
148	HCFCD 02377	Rectangular concrete channel (remove and replace existing concrete channel including all toewalls, seal slab, grade beams, joint materials, weep holes, geotextiles, saw cutting and appurtenances)	SY	52		
TOTAL BASE UNIT PRICES FOR STORM						

REST OF PAGE INTENTIONALLY LEFT BLANK

B. BASE UNIT PRICE TABLE:

UNIT PRICES FOR - WASTEWATER UTILITY

Item No.	Spec. Ref.	Base Unit Short Title	Unit of Measure	Estimated Quantity	Unit Price (this column controls)	Total in figures
TOTAL BASE UNIT PRICES FOR WASTEWATER						

REST OF PAGE INTENTIONALLY LEFT BLANK

B. BASE UNIT PRICE TABLE:

UNIT PRICES FOR - WATER UTILITY

Item No.	Spec. Ref.	Base Unit Short Title	Unit of Measure	Estimated Quantity	Unit Price (this column controls)	Total in figures
149	02511	2-inch diameter water main by open-cut	LF	20		
150	02511	2-inch diameter water main by augering	LF	40		
151	02511	6-inch diameter water main by open-cut	LF	543		
152	02511	6-inch diameter water main by augering	LF	616		
153	02511	6-inch diameter water main by open-cut (ductile iron w/restrained joints)	LF	18		
154	02511	8-inch diameter water main by open-cut	LF	142		
155	02511	8-inch diameter water main by augering	LF	4,370		
156	02511	8-inch diameter water main by open-cut (ductile iron w/restrained joints)	LF	1,350		
157	02511	12-inch diameter water main by augering	LF	3,403		
158	02511	12-inch diameter water main by open-cut (ductile iron w/restrained joints)	LF	359		
159	02512	3/4-inch to 1-inch diameter copper service line with meter box, short side	EA	87		
160	02512	3/4-inch to 1-inch diameter copper service line with meter box, short side (temporary)	EA	87		
161	02512	3/4-inch to 1-inch diameter copper service line with meter box, long side	EA	58		
162	02512	3/4-inch to 1-inch diameter copper service line with meter box, long side (temporary)	EA	58		
163	02512	1-1/2-inch to 2-inch diameter copper service line with meter box, short side	EA	1		
164	02512	1-1/2-inch to 2-inch diameter copper service line with meter box, long side	EA	2		
165	2513	2" wet connection	EA	2		
166	2513	6" wet connection	EA	1		

B. BASE UNIT PRICE TABLE:

UNIT PRICES FOR - WATER UTILITY

Item No.	Spec. Ref.	Base Unit Short Title	Unit of Measure	Estimated Quantity	Unit Price (this column controls)	Total in figures
167	2513	8" wet connection	EA	2		
168	2513	12" wet connection	EA	2		
169	02516	2" cut, plug and abandon	EA	1		
170	02516	4" cut, plug and abandon	EA	4		
171	02516	6" cut, plug and abandon	EA	7		
172	02516	8" cut, plug and abandon	EA	6		
173	02516	12" cut, plug and abandon	EA	5		
174	02516	6" cut and plug	EA	7		
175	02516	8" cut and plug	EA	6		
176	02516	12" cut and plug	EA	24		
177	02520	Fire hydrant assembly, all depths, including 6-inch diameter gate valve and box	EA	19		
178	02520	6-inch diameter fire hydrant branch by open-cut	LF	303		
179	02520	Remove and salvage existing fire hydrant and branch	EA	17		
180	02525	12-inch by 12-inch diameter tapping sleeve and valve with box	EA	1		
181	02525	12-inch by 24-inch diameter tapping sleeve and valve with box	EA	1		
182	02525	2-inch diameter blow-off valve with box	EA	2		
183	02511 02518	8-inch Steel Water Line For Aerial Crossing (steel pipe, pipe guards and all steel appurtenances Complete In Place	LF	100		

B. BASE UNIT PRICE TABLE:

UNIT PRICES FOR - WATER UTILITY

Item No.	Spec. Ref.	Base Unit Short Title	Unit of Measure	Estimated Quantity	Unit Price (this column controls)	Total in figures
184	01110	8-inch Aerial Crossing Concrete Structure (concrete piles and concrete bent cap), Complete In Place	LS	1		
185	02511 02518	12-inch Steel Water Line For Aerial Crossing (steel pipe, pipe guards and all steel appurtenances Complete In Place	LF	100		
186	01110	12-inch Aerial Crossing Concrete Structure (concrete piles and concrete bent cap), Complete In Place	LS	1		
187	02524	2-inch diameter Air Release Valve For Aerial Crossing	EA	2		
188	02526	Relocate and reinstall meter with new box	EA	31		
TOTAL BASE UNIT PRICES FOR WATER						

REST OF PAGE INTENTIONALLY LEFT BLANK

C. EXTRA UNIT PRICE TABLE:

Item No.	Spec. Ref.	Base Unit Short Title	Unit of Measure	Estimated Quantity	Unit Price (this column controls)	Total in figures
189	02221	Remove miscellaneous concrete and masonry	CY	100	$15.00 (2)	$1,500.00 (2)
190	02317	6" Overexcavation of trench bottom	LF	100	$3.00 (2)	$300.00 (2)
191	02318	Excavation around obstructions	CY	100	$10.00 (2)	$1,000.00 (2)
192	02318	Extra hand excavation	CY	100	$20.00 (2)	$2,000.00 (2)
193	02318	Extra machine excavation	CY	100	$10.00 (2)	$1,000.00 (2)
194	02318	Extra placement of backfill material	CY	100	$15.00 (2)	$1,500.00 (2)
195	02318	Extra placement of granular fill	CY	100	$20.00 (2)	$2,000.00 (2)
196	02318	Extra select backfill	CY	100	$20.00 (2)	$2,000.00 (2)
197	02321	Extra cement-stabilized sand	CY	100	$25.00 (2)	$2,500.00 (2)
198	02511	Extra ductile Iron compact fittings in place complete in place	TON	1	$3,000.00 (2)	$3,000.00 (2)
199	03315	Extra Class "A" concrete with or without forms (complete-in-place)	CY	100	$100.00 (2)	$10,000.00 (2)
TOTAL EXTRA UNIT PRICES						

D. CASH ALLOWANCE TABLE:

Item No.	Spec. Ref.	Base Unit Short Title			Unit Price (this column controls)	Total in figures
1	01110	New or removal and relocation of existing street lights by Centerpoint Energy, including all related appurtenances, complete in place			$37,886.00 (1)	$37,886.00 (1)
2	01110	City of Houston, Street cut permits			$10,000.00 (1)	$10,000.00 (1)
TOTAL CASH ALLOWANCES						$47,886.00 (1)

E. ALTERNATES TABLE:

Alternative No.	Alternate Short Title	Total Price for Alternate in figures
	Not Applicable	
TOTAL ALTERNATES		**$0.00**

REST OF PAGE INTENTIONALLY LEFT BLANK

F. TOTAL BID PRICE: _____

(Add Totals for Items A., B., C., D., and E. above)

2.0 SIGNATURES: By signing this Document, I agree that I have received and reviewed all Addenda and considered all costs associated with the Addenda in calculating the Total Bid Price.

Bidder: _____
(Print or type full name of your proprietorship, partnership, corporation, or joint venture.*)

** By: _____
Signature Date

Name: _____
(Print or type name) Title

Address: _____
(Mailing)

_____
(Street, if different)

Telephone and Fax Number: _____
(Print or type numbers)

* If Bid is a joint venture, add additional Bid Form signature sheets for each member of the joint venture.

** Bidder certifies that the only person or parties interested in this offer as principals are those named above. Bidder has not directly or indirectly entered into any agreement, participated in any collusion, or otherwise taken any action in restraint of free competitive bidding.

Note: This document constitutes a government record, as defined by § 37.01 of the Texas Penal Code. Submission of a false government record is punishable as provided in § 37.10 of the Texas Penal Code.

Footnotes for Tables B through E:

(1) Fixed Unit Price determined prior to Bid. Cannot be adjusted by the Bidder.

(2) Minimum Bid Price determined prior to Bid. Can be increased by the Bidder by crossing out the Minimum and noting revised price on the line above.

(3) Maximum Bid Price determined prior to Bid. Can be decreased by Bidder by crossing out the Maximum and noting revised price on the line above.

(4) Fixed Range Unit Price determined prior to Bid. Unit Price can be adjusted by Bidder to any amount within the range defined by crossing out prices noted and noting revised price on the line above.

END OF DOCUMENT
00410-B18
10-26-2010

City of Houston
Department Of Public Works And Engineering
Engineering And Construction Division

PROJECT MANUAL
WHITEHEATHER DRAINAGE AND PAVING SUB-PROJECT IV
HOUSTON, TEXAS
WBS NO.: M-000262-0004-4

Divisions 00 through 16

APRIL 2012

STATE OF TEXAS
EPIFANIO E. SALAZAR JR.
67749
REGISTERED
PROFESSIONAL ENGINEER

4-13-2012

SES HORIZON CONSULTING ENGINEERS, INC.
TEXAS REGISTERED ENGINEERING FIRM F-003922

SES HORIZON
CONSULTING ENGINEERS, INC.
Civil Structural Transportation
10101 SOUTHWEST FREEWAY, SUITE 400
HOUSTON, TEXAS 77074
(TEL.) (713) 988-5504 (FAX.) (713) 988-1441

Document 00010

TABLE OF CONTENTS

NOTE: Bold capitalized Specification Sections are included in **http://documents.publicworks.houstontx.gov/document-center/doc_details/3041-standard-construction-specifications.html**; and are incorporated in Project Manuals by reference as if copied verbatim. Documents listed "for filing" are to be provided by Bidder and are not included in this Project Manual unless indicated for example only. The Document numbers and titles hold places for actual documents to be submitted by Contractor during Bid, post-bid, or construction phase of the Project. Specification Sections marked with an asterisk (*) are amended by a supplemental specification, printed on blue paper and placed in front of the Specification it amends. Documents in the 200, 300 and 400 series of Division 00, except for Document 00410B – Bid Form, Part B, are not part of the Contract.

Doc. No.	Document Title	Doc. Date
	INTRODUCTORY INFORMATION	
00010	Table of Contents	03-01-2012
00015	List of Drawings	02-01-2004
	BIDDING REQUIREMENTS	
	INSTRUCTIONS TO BIDDERS	
00200	Instructions to Bidders	08-18-2006
00210	Supplementary Instructions to Bidders	10-11-2011
00220	Request for Bid Information	06-11-2004
	INFORMATION AVAILABLE TO BIDDERS	
00320	Geotechnical Information	09-02-2005
00340	Environmental Information	09-14-2005
	BID FORMS AND SUPPLEMENTS	
00410	Bid Form, Parts A & B	02-01-2010
00430	Bidder's Bond (For filing; Example Form)	02-01-2004
00450	Bidder's Statement of MWBE/PDBE/DBE/SBE Status	03-09-2007
00452	Contractor Submission List - Fair Campaign Ordinance	04-30-2004
00453	Bidder's Statement of Residency	02-01-2004
00454	Affidavit of Non-interest	02-01-2004
00455	Affidavit of Ownership or Control	09-04-2007
00457	Conflict of Interest Questionnaire	02-28-2006
00459	Contractor's Statement Regarding Previous Contracts Subject to EEO	02-01-2004
00470	Pay or Play Acknowledgement Form (POP-1A)	06-30-2008

Doc. No.	Document Title	Doc. Date
POST-BID PROCEDURES		
00495	Post-bid Procedures	05-05-2011

CONTRACTING REQUIREMENTS

AGREEMENT		
00501	Resolution of Contractor	02-01-2010
00520	Agreement	11-01-2010
BONDS AND CERTIFICATES		
00600	List of Proposed Subcontractors and Suppliers, Parts A & B	03-09-2007
00601	Drug Policy Compliance Agreement	02-01-2004
00602	Contractor's Drug Free Workplace Policy (For filing)	
00603	Checklist for Drug Policy Submittal	02-09-2012
00604	History of OSHA Actions and List of On-the-job Injuries	02-01-2004
00605	List of Safety Impact Positions	02-01-2004
00606	Contractor's Certification of No Safety Impact Positions	02-01-2004
00607	Certificate Regarding Debarment	02-01-2004
00610	Performance Bond	05-17-2005
00611	Statutory Payment Bond	05-17-2005
00612	One-year Maintenance Bond	05-17-2005
00620	Affidavit of Insurance (with attached Certificates of Insurance)	02-01-2004
00622	Name and Qualifications of Proposed Superintendent (For filing)	
00624	Affidavit of Compliance with Affirmative Action Program	02-01-2004
00630	Certification of Agreement to Comply with Pay or Play Program	05-23-2011
00631	City of Houston Pay or Play Program – List of Participating Subcontractors	08-01-2007
00633	Equal Employment Opportunity - Certification By Material Suppliers	02-01-2010
00642	Monthly Subcontractor Payment Reporting Form	02-01-2010
00646	Payment Notification Explanation of Withholding	02-01-2010
GENERAL CONDITIONS		
00700	General Conditions	11-01-2011
SUPPLEMENTARY CONDITIONS		
00800	Supplementary Conditions	11-01-2011
00805	Affirmative Action Compliance Program	11-01-2011
00808	Minority and Women-owned Business Enterprise (MWBE), Persons with Disabilities Business Enterprise (PDBE) Program or Small Business Enterprise (SBE)	05-11-2011
00820	Wage Scale for Engineering Construction	03-01-2012

Doc. No.	Document Title	Doc. Date
00830	Trench Safety Geotechnical Information	02-01-2004
00840	Pay or Play Program Requirements	08-01-2007

ADDENDA AND MODIFICATIONS

00931	Request for Information (Example only)	02-01-2004

SPECIFICATIONS

DIVISION 1 - GENERAL REQUIREMENTS

Doc. No.	Document Title	Doc. Date
01110	Summary of Work	06-27-2005
01145	Use of Premises	01-01-2011
01255	Change Order Procedures	08-01-2003
01270	Measurement and Payment	08-01-2003
01292	Schedule of Values	08-01-2003
01312	Coordination and Meetings	08-01-2003
01321	Construction Photographs	08-01-2003
01325	Construction Schedule	08-01-2003
01326	Construction Schedule (Bar Chart)	08-01-2003
01330	Submittal Procedures	08-01-2003
01340	Shop Drawings, Product Data, and Samples	08-01-2003
01351	Environmental Safety and Worker Protection	01-01-2011
01410	TPDES Requirements (with Attachments)	02-01-2011
01422	Reference Standards	08-01-2003
01450	Contractor's Quality Control	08-01-2003
01452	Inspection Services	08-01-2003
01454	Testing Laboratory Services	08-01-2003
01502	Mobilization	08-01-2008
01504	Temporary Facilities and Controls	01-01-2011
01506	Diversion Pumping	08-01-2003
01520	Temporary Field Office	02-08-2012
01554S	Traffic Control and Street Signs	10-27-2009
*01554	Traffic Control and Street Signs	04-16-2004
01555	Traffic Control and Regulation	01-01-2011
01562	Tree and Plant Protection	01-01-2011
01570	Storm Water Pollution Prevention Control	02-01-2011
01575	Stabilized Construction Exit	02-01-2011
01576	Waste Material Disposal	08-01-2003
01578	Control of Ground and Surface Water	01-01-2011
01580	Project Identification Signs	08-01-2003
01581	Excavation in Public Way Permit Signs	08-01-2003
01610	Basic Product Requirements	01-01-2011
01630	Product Substitution Procedures	08-01-2003
01725	Field Surveying	01-01-2011
01731	Cutting and Patching	01-01-2011
01732	Procedure for Water Valve Assistance (with Attachments)	08-01-2003
01740	Site Restoration	08-01-2003

Doc. No.	Document Title	Doc. Date
01755	Starting Systems	08-01-2003
01770	Closeout Procedures	08-01-2003
01782	Operations and Maintenance Data	08-01-2003
01785	Project Record Documents	08-01-2003

DIVISION 2 - SITE WORK

02081	CAST-IN-PLACE CONCRETE MANHOLES	01-01-2011
02082	PRECAST CONCRETE MANHOLES	01-01-2011
02083	FIBERGLASS MANHOLES	01-01-2011
02084	FRAMES, GRATES, RINGS, AND COVERS	08-01-2008
02085	VALVE BOXES, METER BOXES, AND METER VAULTS	01-01-2011
02086	ADJUSTING MANHOLES, INLETS, AND VALVE BOXES TO GRADE	01-01-2011
02087	BRICK MANHOLE FOR STORM SEWERS	10-01-2002
02136	WASTE MATERIAL HANDLING AND DISPOSAL	01-01-2011
02201	SITE PREPARATION, GRADING, RESTORATION AND CLEANUP FOR WATER STORAGE TANKS	01-01-2011
02221	REMOVING EXISTING PAVEMENTS AND STRUCTURES, WOOD, AND DEMOLITION DEBRIS	07-01-2009
02222	ABANDONMENT OF SEWERS	01-01-2011
02233	CLEARING AND GRUBBING	01-01-2011
02260	TRENCH SAFETY SYSTEM	02-01-2011
02315	ROADWAY EXCAVATION	07-01-2009
02316	EXCAVATION AND BACKFILL FOR STRUCTURES	01-01-2011
02317	EXCAVATION AND BACKFILL FOR UTILITIES	01-01-2011
02318	EXTRA UNIT PRICE WORK FOR EXCAVATION AND BACKFILL	01-01-2011
02319	BORROW	01-01-2011
02320	UTILITY BACKFILL MATERIALS	01-01-2011
02321	CEMENT STABILIZED SAND	01-01-2011
02322	FLOWABLE FILL	08-01-2008
02330	EMBANKMENT	10-01-2002
02336	LIME-STABILIZED SUBGRADE	10-01-2002
02337	LIME/FLY-ASH STABILIZED SUBGRADE	10-01-2002
02338	PORTLAND CEMENT STABILIZED SUBGRADE	10-01-2002
02340	COMPACTED SAND FILL UNDER TANK FLOOR PLATE	01-01-2011
02400	TUNNEL SHAFTS	01-01-2011
02401	COMMON TUNNEL SHAFTS	01-01-2011
02425	TUNNEL EXCAVATION AND PRIMARY LINER	10-01-2002
02426	SEWER LINE IN TUNNELS	10-01-2002
02427	PLASTIC LINER FOR LARGE-DIAMETER CONCRETE	

Doc. No.	Document Title	Doc. Date
	SEWERS AND STRUCTURES	10-01-2002
02431	TUNNEL GROUT	10-01-2002
02441	MICROTUNNELING AND PIPE-JACKED TUNNELS	01-01-2011
02447	AUGERING PIPE AND CONDUIT	10-01-2002
02448	PIPE AND CASING AUGERING FOR SEWERS	10-01-2002
02465	DRILLED SHAFT FOUNDATIONS	10-01-2002
02476	CAISSON FOR LIFT STATION	01-01-2011
02501	DUCTILE IRON PIPE AND FITTINGS	02-01-2011
02502	STEEL PIPE AND FITTINGS	01-01-2011
02503	COPPER TUBING	10-01-2002
02504	CENTRIFUGALLY CAST FIBERGLASS PIPE	02-01-2011
02505	HIGH DENSITY POLYETHYLENE (HDPE) SOLID AND PROFILE WALL PIPE	02-01-2011
02506	POLYVINYL CHLORIDE PIPE	01-01-2011
02507	PRESTRESSED CONCRETE CYLINDER PIPE	01-01-2011
02508	EXTRA STRENGTH CLAY PIPE	02-01-2011
02509	FIBERGLASS REINFORCED PIPE FOR PRESSURE MAINS	01-01-2011
02511	WATER LINES	01-01-2011
02512	WATER TAP AND SERVICE LINE INSTALLATION	01-01-2011
02513	WET CONNECTIONS	10-01-2002
02514	DISINFECTION OF WATER LINES	01-01-2011
02515	HYDROSTATIC TESTING OF PIPELINES	01-01-2011
02516	CUT, PLUG AND ABANDONMENT OF WATER LINES	01-01-2011
02517	WATER LINE IN TUNNELS	10-01-2002
02518	STEEL PIPE AND FITTINGS FOR LARGE-DIAMETER WATER LINES	01-01-2011
02520	FIRE HYDRANTS	05-05-2011
02521	GATE VALVES	01-01-2011
02522	BUTTERFLY VALVES	01-01-2011
02523	PRESSURE REDUCING VALVES	10-01-2002
02524	AIR RELEASE AND VACUUM RELIEF VALVES	01-01-2011
02525	TAPPING SLEEVES AND VALVES	01-01-2011
02526	WATER METERS	01-01-2011
02527	POLYURETHANE COATINGS ON STEEL OR DUCTILE IRON PIPE	10-01-2002
02528	POLYETHYLENE WRAP	01-01-2011
02531	GRAVITY SANITARY SEWERS	01-01-2011
02532	SANITARY SEWER FORCE MAINS	01-01-2011
02533	ACCEPTANCE TESTING FOR SANITARY SEWERS	01-01-2011
02534	SANITARY SEWER SERVICE STUBS OR RECONNECTIONS	01-01-2011
02550	SLIPLININGS SANITARY SEWERS	01-01-2011
02553	POINT REPAIRS AND OBSTRUCTION REMOVALS	01-01-2011

Doc. No.	Document Title	Doc. Date
02555	MANHOLE REHABILITATION	01-01-2011
02557	FOLDED AND FORMED PIPE	01-01-2011
02558	CLEANING AND TELEVISION INSPECTION	01-01-2011
02571	PIPE BURSTING/CRUSHING SANITARY SEWERS	01-01-2011
02581	STREET LIGHTING CONDUIT	10-01-2002
02582	TRAFFIC SIGNAL POLE ASSEMBLIES	07-01-2009
02611	REINFORCED CONCRETE PIPE	02-01-2011
02612	PRECAST REINFORCED CONCRETE BOX SEWERS	10-01-2002
02613	BAR WRAPPED STEEL CYLINDER PIPE	01-01-2011
02621	GEOTEXTILE	10-01-2002
02631	STORM SEWERS	01-01-2011
02632	CAST-IN-PLACE INLETS, HEADWALLS, AND WINGWALLS	10-01-2002
02633	PRECAST CONCRETE INLETS, HEADWALLS, AND WINGWALLS	10-01-2002
02642	CORRUGATED METAL PIPE	10-01-2002
02643	STRUCTURAL PLATE CULVERT STRUCTURES	10-01-2002
02662	PIPING, VALVES, FITTINGS, AND ACCESSORIES FOR WATER STORAGE TANKS	01-01-2011
02711	HOT MIX ASPHALT BASE COURSE	07-01-2009
02712	CEMENT STABILIZED BASE COURSE	10-01-2002
02713	RECYCLED CRUSHED CONCRETE BASE COURSE	07-01-2009
02714	FLEXIBLE BASE COURSE FOR TEMPORARY DRIVEWAYS	07-01-2009
02741	ASPHALTIC CONCRETE PAVEMENT	07-01-2009
02742	PRIME COAT	10-01-2002
02743	TACK COAT	10-01-2002
02751	CONCRETE PAVING	07-01-2009
02752	CONCRETE PAVEMENT JOINTS	10-01-2002
02753	CONCRETE PAVEMENT CURING	10-01-2002
02754	CONCRETE DRIVEWAYS	09-01-2002
02761	COLORED CONCRETE FOR MEDIANS AND SIDEWALKS	09-01-2002
02762	BLAST CLEANING OF PAVEMENT	10-01-2002
02764	RAISED PAVEMENT MARKERS	10-01-2002
02765	TEMPORARY AND REMOVABLE REFLECTORIZED PAVEMENT MARKINGS	10-01-2002
02767	THERMOPLASTIC PAVEMENT MARKINGS	10-01-2002
02771	CURB, CURB AND GUTTER, AND HEADERS	10-01-2002
02772	CONCRETE MEDIANS AND DIRECTIONAL ISLANDS	10-01-2002

Doc. No.	Document Title	Doc. Date
02775S	CONCRETE SIDEWALKS	02-03-2006
*02775	CONCRETE SIDEWALKS	10-01-2002
02811	LANDSCAPE IRRIGATION	10-01-2002
02821	CHAIN LINK FENCES AND GATES	06-28-2005
02893	TRAFFIC SIGNAL CONSTRUCTION	07-01-2009
02911	TOPSOIL	10-01-2002
02912	TREE, PLANT, AND HARDSCAPE PROTECTION	07-01-2009
02915	TREE PLANTING	01-01-2011
02921	HYDRO MULCH SEEDING	01-01-2011
02922	SODDING	07-01-2009
02951	PAVEMENT REPAIR AND RESTORATION	07-01-2009
02960	MILLING PAVEMENT	07-01-2009
02983	REMOVAL AND RESTORATION OF BRICK PAVED STREETS	10-01-2002

DIVISION 3 - CONCRETE

03315	CONCRETE FOR UTILITY CONSTRUCTION	10-01-2002

DIVISION 4 - MORTAR

04061	MORTAR	10-01-2002
04210	BRICK MASONRY FOR UTILITY CONSTRUCTION	10-01-2002

DIVISION 5 – METALS

05501	METAL FABRICATIONS	01-01-2011

DIVISION 6 - WOOD AND PLASTICS

DIVISION 7 - THERMAL AND MOISTURE PROTECTION

DIVISION 8 - DOORS AND WINDOWS

DIVISION 9 - FINISHES

DIVISION 10 - SPECIALTIES

DIVISION 11 - EQUIPMENT

DIVISION 12 - FURNISHINGS

DIVISION 13 - SPECIAL CONSTRUCTION

DIVISION 14 - CONVEYING SYSTEMS

Doc. No.	Document Title	Doc. Date
DIVISION 15 - MECHANICAL		
DIVISION 16 – TRAFFIC		
16709	COMMUNICATIONS CONDUIT	07-01-2009
16710	PULL BOXES	07-01-2009
16711	TRAFFIC SIGNAL CONDUIT	07-01-2009
16715	VEHICLE SIGNAL HEADS	07-01-2009
16716	PEDESTRIAN SIGNAL HEADS	07-01-2009
16718	LED VEHICLE TRAFFIC SIGNAL MODULE	07-01-2009
16719	COUNTDOWN PEDESTRIAN SIGNAL MODULE	07-01-2009
16720	TRAFFIC SIGNAL CABLE	07-01-2009
16724	EMERGENCY VEHICLE PREEMPTION (EVP)	07-01-2009
16727	TRAFFIC SIGNAL LOOP DETECTOR	09-02-2004
16730	ITS CONTROLLER CABINET ASSEMBLY	07-01-2009
16731	MODEL 2070 CONTROLLER UNIT	07-01-2009
16750	ACCESSIBLE PEDESTRIAN PUSH BUTTON STATION	07-01-2009
HARRIS COUNTY FLOOD CONTROL DISTRICT		
02316	**STRUCTURAL EXCAVATING AND BACKFILLING**	**08-31-2005**
02321	**CEMENT STABILIZED SAND**	**08-31-2005**
02364	**FILTER DAMS**	**08-31-2005**
02376	**CONCRETE CHANNEL LINING AND CONCRETE INTERCEPTOR STRUCTURES**	**08-31-2005**
02377	**RECTANGULAR CONCRETE CHANNEL**	**08-31-2005**
02378	**RIPRAP AND GRANULAR FILL**	**08-31-2005**
02379	**GEOTEXTILES FOR EROSION CONTROL SYSTEMS**	**08-31-2005**
03310	**CONCRETE**	**08-31-2005**

Appendices

APPENDIX A – ENVIRONMENTAL SITE ASSESSMENT (ATTACHED IN CD/DVD)

APPENDIX B – GEOTECHNICAL INVESTIGATION (ATTACHED IN CD/DVD)

APPENDIX C – STORM WATER POLLUTION PREVENTION PLAN (ATTACHED IN CD/DVD)

Doc. No.	Document Title	Doc. Date

END OF DOCUMENT

Document 00015

LIST OF DRAWINGS

Sheet No.	Drawing Title
1	COVER SHEET
2	INDEX OF DRAWINGS
3	UTILITY NOTES
4	CONSTRUCTION LEGEND AND TOPO LEGEND
5-6	OVERALL PROJECT LAYOUT
7-8	STORM SEWER – EXISTING & PROPOSED PROJECT LAYOUT
9-10	SANITARY SEWERS – EXISTING PROJECT LAYOUT
11-12	WATER LINES - EXISTING & PROPOSED PROJECT LAYOUT
13-14	STREET LIGHT - EXISTING & PROPOSED PROJECT LAYOUT
15-17	TYPICAL SECTION
18-19	PROPOSED CONDITIONS DRAINAGE AREA MAP
20-31	PROPOSED CONDITIONS HYDRAULIC CALCULATIONS
32-33	SURVEY CONTROL MAP
34-38	SURVEY CONTROL SWING TIES
39	HORIZONTAL ALIGNMENT DATA
	PLAN & PROFILE PLANS
	WHITEHEATHER DR.
40	FROM STA. 0+00 TO STA. 4+20
41	FROM STA. 0+00 TO STA. 4+20 PROFILE
42	FROM STA. 4+20 TO STA. 8+40
43	FROM STA. 4+20 TO STA. 8+40 PROFILE
44	FROM STA. 8+40 TO STA. 12+60
45	FROM STA. 8+40 TO STA. 12+60 PROFILE
46	FROM STA. 12+60 TO STA. 16+80
47	FROM STA. 12+60 TO STA. 16+80 PROFILE
48	FROM STA. 16+80 TO STA. 21+40
49	FROM STA. 16+80 TO STA. 21+40 PROFILE
50	FROM STA. 21+40 TO STA. 24+00
51	FROM STA. 21+40 TO STA. 24+00 PROFILE

	WHITEHEATHER DR.
52	FROM STA. 30+00 TO STA. 33+00
53	FROM STA. 30+00 TO STA. 33+00 PROFILE
	LANDMARK DR.
54	FROM STA. 8+40 TO STA. 12+60
55	FROM STA. 12+60 TO STA. 16+00
56	FROM STA. 16+00 TO STA. 20+60
57	FROM STA. 20+60 TO STA. 24+00
	WEST OREM DR.
58	FROM STA. 0+00 TO STA. 4+20
59	FROM STA. 4+20 TO STA. 8+40
60	FROM STA. 8+40 TO STA. 12+60
61	FROM STA. 12+60 TO STA. 15+00
	BERAN DR.
62	FROM STA. 0+00 TO STA. 4+20
63	FROM STA. 4+20 TO STA. 8+40
64	FROM STA. 8+40 TO STA. 12+60
65	FROM STA. 12+60 TO STA. 14+20
	EBBTIDE DR.
66	FROM STA. 0+00 TO STA. 3+60
67	FROM STA. 3+60 TO STA. 8+40
68	FROM STA. 8+40 TO STA. 12+60
69	FROM STA. 12+60 TO STA. 15+20
	KNOTTY OAKS TR.
70	FROM STA. 0+00 TO STA. 2+80
71	FROM STA. 2+80 TO STA. 7+00
72	FROM STA. 7+00 TO STA. 11+20
73	FROM STA. 11+20 TO STA. 14+20

	TIDEWATER DR.
74	FROM STA. 0+00 TO STA. 3+80
75	FROM STA. 3+80 TO STA. 8+00
76	FROM STA. 8+00 TO STA. 12+00
77	FROM STA. 12+00 TO STA. 14+20
	WUTHERING HEIGHTS DR.
78	FROM STA. 0+00 TO STA. 4+20
79	FROM STA. 4+20 TO STA. 8+40
80	FROM STA. 8+40 TO STA. 12+60
81	FROM STA. 12+60 TO STA. 15+00
	STORM WATER POLLUTION PREVENTION PLAN
	WHITEHEATHER DR.
82	STORM WATER POLLUTION PREVENTION PLAN
83	STORM WATER POLLUTION PREVENTION PLAN
83A	STORM WATER POLLUTION PREVENTION PLAN DETAILS
83B	HCFCD STORM WATER POLLUTION PREVENTION DETAILS
	TREE PRESERVATION AND PLANTING PLAN
84-85	OVERALL TREE PROTECTION LAYOUT
	WHITEHEATHER DR.
86	FROM STA. 0+00 TO STA. 4+20
87	FROM STA. 4+20 TO STA. 8+40
88	FROM STA. 8+40 TO STA. 12+60
89	FROM STA. 12+60 TO STA. 16+80
90	FROM STA. 16+80 TO STA. 21+40
91	FROM STA. 21+40 TO STA. 24+00
	WHITEHEATHER DR.
92	FROM STA. 30+00 TO STA. 33+00

	LANDMARK DR.
93	FROM STA. 8+40 TO STA. 12+60
94	FROM STA. 12+60 TO STA. 16+00
95	FROM STA. 16+00 TO STA. 20+60
96	FROM STA. 20+60 TO STA. 24+00
	WEST OREM DR.
97	FROM STA. 0+00 TO STA. 4+20
98	FROM STA. 4+20 TO STA. 8+40
99	FROM STA. 8+40 TO STA. 12+60
100	FROM STA. 12+60 TO STA. 15+00
	BERAN DR.
101	FROM STA. 0+00 TO STA. 4+20
102	FROM STA. 4+20 TO STA. 8+40
103	FROM STA. 8+40 TO STA. 12+60
104	FROM STA. 12+60 TO STA. 14+20
	EBBTIDE DR.
105	FROM STA. 0+00 TO STA. 3+60
106	FROM STA. 3+60 TO STA. 8+40
107	FROM STA. 8+40 TO STA. 12+60
108	FROM STA. 12+60 TO STA. 15+20
	KNOTTY OAKS TR.
109	FROM STA. 0+00 TO STA. 2+80
110	FROM STA. 2+80 TO STA. 7+00
111	FROM STA. 7+00 TO STA. 11+20
112	FROM STA. 11+20 TO STA. 14+20
	TIDEWATER DR.
113	FROM STA. 0+00 TO STA. 3+80
114	FROM STA. 3+80 TO STA. 8+00
115	FROM STA. 8+00 TO STA. 12+00

116	FROM STA. 12+00 TO STA. 14+20
	WUTHERING HEIGHTS DR.
117	FROM STA. 0+00 TO STA. 4+20
118	FROM STA. 4+20 TO STA. 8+40
119	FROM STA. 8+40 TO STA. 12+60
120	FROM STA. 12+60 TO STA. 15+00
121	TREE PRESERVATION PLAN SPECIFICATION
122	TREE PRESERVATION PLAN DETAILS
123	TREE PLANTING DETAILS & SPECS
	TRAFFIC CONTROL PLANS
124	TRAFFIC GENERAL NOTES
125-126	ADVANCE WARNING SIGN LAYOUT
127-138	TRAFFIC CONTROL PLAN
138A	TRAFFIC CONTROL PLAN FOR BOULEVARD CLOSURES
139-140	TRAFFIC CONTROL PLAN PROFILE CONCRETE BARRIER
141-142	CONSTRUCTION PHASE PLAN LAYOUT
	TRAFFIC SIGNAL SHEETS
143	EXISTING TRAFFIC SIGNAL PLAN SHEET
144	PROPOSED TRAFFIC SIGNAL PLAN SHEET
145	POLE SCHEDULE SHEET
146	CABLE SCHEMATIC SHEET
147	TRAFFIC SIGNAL GENERAL NOTES
148	HARDWARE LEGENDS
149	TYPICAL MAST ARM / POLE FIXTURE CONFIGURATION
150	TRAFFIC SIGNAL STRUCTURES (SHEET 1 OF 2)
151	TRAFFIC SIGNAL STRUCTURES (SHEET 2 OF 2)
152	POLE FOUNDATION DETAILS
153	PEDESTAL POLE WITH SCREW-IN ANCHOR FOUNDATION
154	PULL BOXES
155	OVERHEAD STREET NAMES SIGN MOUNTING DETAILS
156	CONTROLLER FOUNDATIONS
157	LOOP DETECTOR INSTALLATION DETAILS

158	ELECTRICAL SERVICE SUPPORT PEDESTAL SERVICE TYPE PS
159	TRAFFIC CONTROL PLAN FOR SIGNAL CONSTRUCTION
160	CROSSWALK CLOSURES AND PEDESTRIAN DETOURS, SOLAR SCHOOL ZONE FLASHING BEACON
161	COMMUNICATIONS OVERVIEW
162	COMMUNICATIONS SERVICE BOX DETAILS
	CITY OF HOUSTON STANDARDS & DETAILS
163	PROJECT IDENTIFICATION SIGN
164	PAVEMENT MARKINGS
165-166	PAVEMENT MARKING DETAILS
167	BARRICADE STANDARDS
168-171	STREET & BRIDGE DETAILS
172	DRIVEWAY SCHEDULE & DETAILS
173-175	STORM SEWER DETAILS
176-177	LOW FLOW CHANNEL & SLOPE PAVING OUTFALL DETAILS
178-179	WATER DETAILS
180	12 IN. DIAMETER WATER LINE AERIAL CROSSING DETAIL
181	8 IN. DIAMETER WATER LINE AERIAL CROSSING DETAIL
182	TXDOT PRESTRESSED CONCRETE PILING DETAIL
	EARTHWORK CROSS SECTIONS
183	WEST OREM
184	BERAN DR.
185	EBBTIDE DR.
186	KNOTTY OAKS TR.
187	TIDEWATER DR.
188	WUTHERING HEIGHTS DR.
189	LANDMARK DR.
190	WHITEHEATHER DR.
191	WHITEHEATHER DR.

END OF DOCUMENT

Document 00200

TABLE OF CONTENTS

INSTRUCTIONS TO BIDDERS

PARA	TITLE	PAGE
1.0	*RELATED DOCUMENTS*	1
2.0	*DEFINITIONS*	1
3.0	*NOTICE TO BIDDERS*	2
4.0	*BID DOCUMENTS*	2
5.0	*EXAMINATION OF DOCUMENTS, SITE, AND LOCAL CONDITIONS*	2
6.0	*INTERPRETATIONS DURING BIDDING*	2
7.0	*ADDENDA*	3
8.0	*SUBSTITUTION OF PRODUCTS*	3
9.0	*PREPARATION OF BIDS*	3
10.0	*BID SUBMISSION*	3
11.0	*BID SECURITY*	4
12.0	*SUBCONTRACTORS AND SUPPLIERS*	4
13.0	*MODIFICATION OR WITHDRAWAL OF BID*	4
14.0	*BID DISQUALIFICATION*	4
15.0	*PREBID MEETING*	5
16.0	*OPENING OF BIDS*	5
17.0	*EVALUATION AND CONSIDERATION OF BIDS*	5
18.0	*ACCEPTANCE OF THE BID*	5

Document 00200

INSTRUCTIONS TO BIDDERS

1.0 *RELATED DOCUMENTS*

A. Document 00210 - Supplementary Instructions to Bidders.

B. Document 00320 - Geotechnical Information.

C. Document 00330 - Existing Conditions.

D. Document 00410 - Bid Form, Parts A & B.

E. Document 00495 - Post-Bid Procedures.

F. Document 00520 - Agreement.

G. Document 00700 - General Conditions.

H. Document 00800 - Supplementary Conditions.

2.0 *DEFINITIONS*

A. Definitions set forth in Document 00700 - General Conditions and in other documents of Project Manual, are applicable to Bid Documents.

B. *Addendum:* Written or graphic instrument issued prior to Bid opening, which clarifies, modifies, corrects, or changes Bid Documents.

C. *Alternate:* The total amount bid for additions to work, as described in Section 01110 - Summary of Work. Each Alternate includes cost of effects on adjacent or related components, and Bidder's overhead and profit.

D. *Bid:* A complete and properly signed offer to perform the Work in accordance with this Document and Document 00210 - Supplementary Instructions to Bidders.

E. *Bid Date:* Date and time set for receipt of Bids as stated in Document 00210 - Supplementary Instructions to Bidders, or as modified by Addenda.

F. *Bid Documents:* Project Manual, Drawings, and Addenda.

G. *Bid Supplement:* A Bid submittal that is required in Document 00410 - Bid Form.

H. *Bidder:* Person or firm, identified in Document 00410B - Bid Form – Part B, including its successors, and its authorized representative.

I. *Code:* Code of Ordinances, Houston, Texas.

J. *Low Bidder:* Apparent successful Bidder that qualifies as a responsible Bidder and that submits Bid with lowest Total Bid Price.

K. *Project Manager:* Person designated in Document 00100 - Advertisement for Bids and Document 00220 - Request for Bid Information to represent the City during bidding and post-bid periods.

L. *Project Manual*: Volume assembled for the Work that includes the bidding requirements, sample forms, Conditions of the Contract, and Specifications.

M. *Security Deposit:* A certified check, cashier's check, or bid bond in the amount of 10 percent of the Total Bid Price.

N. *Total Bid Price:* Total amount bid for performing the Work as identified by Bidder in Document 00410B – Bid Form – Part B, which amount includes:
1. Stipulated Price;
2. Total Base Unit Prices;
3. Total Extra Unit Prices;
4. Total Cash Allowances; and
5. Total Alternates.

3.0 *NOTICE TO BIDDERS*

A. The City of Houston Fair Campaign Ordinance makes it unlawful for a Contractor to offer any contribution to a candidate for City elective office (including elected officers and officers-elect) during a certain period of time prior to and following the award of the Contract by the City Council. The term "Contractor" includes proprietors of proprietorships, all partners of partnerships, and all officers, directors, and holders of 10 percent or more of the outstanding shares of corporations. A statement disclosing the names and business addresses of each of those persons will be required to be submitted with each bid or proposal for a City Contract. Bidder shall complete and submit Document 00452 – Form A, Contractor Submission List, City of Houston Fair Campaign Ordinance, with its Bid to comply with this requirement. See Chapter 18 of the Code for further information.

B. Chapter 15, Article VIII, of the City's Code provides that no contract shall be let, nor any other business transaction entered into, by the City with any person indebted to the City or a qualifying entity, if the contractor or transaction comes within the provisions of Section 15-1(c) of the Code. Exceptions are provided in Section 15-126 of the Code. Bidder shall complete and submit Document 00455 – Affidavit of Ownership or Control, with its Bid to comply with this requirement.

4.0 *BID DOCUMENTS*

A. The Bid Documents may be obtained at location specified in Document 00210 - Supplementary Instructions to Bidders.

B. The Bid Documents are made available only for the purpose of bidding on the Work. Receipt of Bid Documents does not grant a license for other purposes.

C. On receipt of Bid Documents, Bidder shall verify that documents are legible and complete, compare contents of Project Manual with Document 00010 - Table of Contents, and compare Index of Drawings with Document 00015 - List of Drawings. Bidder shall notify Project Manager if Bid Documents are incomplete.

D. If City of Houston Standard Specifications or Standard Details are required by the Project Manual, Bidder shall refer to Document 00210 - Supplementary Instructions to Bidders for purchase information.

5.0 *EXAMINATION OF DOCUMENTS, SITE, AND LOCAL CONDITIONS*

A. Bidder shall examine Project site, become familiar with local conditions under which the Work shall be performed, conduct appropriate investigations, and correlate personal observations with requirements of the Bid Documents before submitting a Bid.

B. Bidder shall make site investigations to the extent Bidder deems necessary to ascertain extent of subsurface conditions.

C. Failure of Bidder to perform the investigations prior to submitting a Bid does not relieve Bidder of responsibility for investigations, interpretations and proper use of available information in the preparation of its Bid.

D. Bidder shall observe limitations of access to occupied or restricted site as stated in Document 00210 - Supplementary Instructions to Bidders.

6.0 *INTERPRETATIONS DURING BIDDING*

A. Bidder shall immediately submit Document 00220 - Request for Bid Information to Project Manager upon finding errors, discrepancies, or omissions in Bid Documents. Confirmation of receipt of questions by the City is the responsibility of Bidder. Verbal discussions and answers are not binding.

B. Document 00220 - Request for Bid Information must be received at least 10 days before the Bid Date to allow issuance of Addenda in accordance with Paragraph 7.0.D. Replies, if issued, are by Addenda.

7.0 *ADDENDA*

A. Addenda that affect bidding requirements are applicable only during bidding period. Addenda to Document 00495 - Post-Bid Procedures are applicable only through issuance of the Notice to Proceed. Addenda that affect the Contract are a part of the Contract.

B. BIDDERS WHO SUBMIT A BID ON THIS PROJECT SHALL BE PRESUMED TO HAVE RECEIVED ALL ADDENDA AND TO HAVE INCLUDED ANY COST THEREOF IN THEIR BIDS, REGARDLESS OF WHETHER THEY ACKNOWLEDGE THE ADDENDA OR NOT.

C. The City will make Addenda available at same location where the Bid Documents may be obtained. The City will notify plan holders of record when Addenda are available. Bidders are responsible for obtaining Addenda after notification.

D. No Addendum will be issued later than noon on Monday before Bid Date, except Addenda with minor clarifications, withdrawing request for Bids, or postponing Bid Date.

8.0 *SUBSTITUTION OF PRODUCTS*

A. No substitutions of Products will be considered during the bidding period.

9.0 *PREPARATION OF BIDS*

A. Bidder shall fill in applicable blanks in Document 00410A&B - Bid Form – Parts A & B and Bid Supplements. In addition, Bidder shall bid all Alternates. Bidder shall properly sign Document 00410B - Bid Form.

B. Bidder shall initial all pages, except signature page, of Document 00410B – Bid Form – Part B.

C. Bidder is responsible for all costs incurred by the Bidder, associated with preparation of its Bid and compliance with Post-bid Procedures.

D. Bidder may not adjust preprinted price on line items stating "Fixed Unit Price" in the description on the Bid Form.

E. Bidder may increase preprinted price on line items stating "Minimum Bid Price" in the description on the Bid Form by crossing out the minimum and inserting revised price on the line above.

F. Bidder may decrease preprinted price on line items stating "Maximum Bid Price" in the description on the Bid Form by crossing out the maximum and inserting revised price on the line above.

G. Bidder shall insert a price no greater than the maximum preprinted range and no less than the preprinted range for line items stating "Fixed Range Unit Price" in the description on the Bid Form by crossing out prices noted and inserting revised price on the line above.

H. Bidder may not adjust Cash Allowance amounts.

10.0 *BID SUBMISSION*

A. City Secretary will receive Bids on Bid Date at location specified in Document 00210 - Supplementary Instructions to Bidders.

B. Bids submitted after Bid Date will be returned to Bidder unopened.

C. Verbal, facsimile, or electronic Bids are invalid and will not be considered.

D. Bidder shall submit in person or by mail one copy of the signed Document 00410 - Bid Form, Parts A and B, along with required Security Deposit, and required Bid Supplements, in a sealed, opaque envelope. In addition, Bidder shall clearly identify Project, Bid Date and Bidder's name on outside of envelope. If forwarded by mail, the sealed envelope containing the Bid must be enclosed in another envelope addressed for postal delivery.

11.0 *BID SECURITY*

A. Bidder shall submit a Security Deposit with its Bid.

B. Certified Check or Cashier's Check

1. Bidder shall make check payable to the City of Houston.

2. A check is submitted on the condition that if Bidder is named Low Bidder and fails either to timely and properly submit documents required in Document 00495 - Post-Bid Procedures, the City will cash the check in accordance with Paragraph 11.0.E.

C. Bid Bond

1. The bid bond must be a valid and enforceable bond, signed by a surety that complies with other requirements set out by law.

2. The bid bond must name the City of Houston as obligee, and be signed by the Bidder as principal and signed and sealed by the surety.

3. The bid bond must be conditioned such that if Bidder is named Low Bidder and then fails to timely and properly submit documents required in Document 00495 - Post-Bid Procedures, surety will be obligated to pay to the City an amount in accordance with Paragraph 11.0.E.

D. Security Deposits will be retained until after the Contract is awarded or all Bids are rejected.

E. Low Bidder forfeits Security Deposit if it fails to timely and properly submit documents required in Document 00495 - Post-Bid Procedures. The City may claim an amount equal to the difference between the Total Bid Price of the defaulting Bidder and the Total Bid Price of the Bidder awarded the Contract. If Security Deposit is a check, the City will reimburse any remaining balance to the defaulting Bidder.

12.0 *SUBCONTRACTORS AND SUPPLIERS*

A. The City may reject proposed Subcontractors or Suppliers.

B. Refer to Document 00800 - Supplementary Conditions, for MWBEPDBE, DBE and SBE goals.

13.0 *MODIFICATION OR WITHDRAWAL OF BID*

A. A Bidder may modify or withdraw a Bid submitted before the Bid Date by written notice to the City Secretary. The notice may not reveal the amount of the original Bid and must be signed by the Bidder.

B. Bidder may not modify or withdraw its Bid by verbal, facsimile, or electronic means.

C. A withdrawn Bid may be resubmitted up to the time designated for receipt of Bids.

14.0 *BID DISQUALIFICATION*

A. The City may disqualify a Bid if the Bidder:

1. fails to provide required Security Deposit in the proper amount;

2. improperly or illegibly completes information required by the Bid Documents;

3. fails to sign Bid or improperly signs Bid;

4. qualifies its Bid; or

5. improperly submits its Bid.

B. When requested, Low Bidder shall present satisfactory evidence that Bidder has regularly engaged in performing construction work as proposed, and has the capital, labor, equipment, and material to perform the Work.

15.0 *PREBID MEETING*

A. A prebid meeting is scheduled to be held at the place, time, and date listed in Document 00210 - Supplementary Instructions to Bidders.

B. All Bidders, subcontractors, and suppliers are invited to attend.

C. Representatives of City Engineer will attend.

16.0 *OPENING OF BIDS*

A. Bids are opened by the City Secretary and publicly read in City Council Chambers on the Public Level in City Hall Annex at 11:00 a.m. on Bid Date.

B. Place and date of Bid opening may be changed in accordance with Sections 15-3(b)(5) and 15-3(b)(6) of the City Code.

17.0 *EVALUATION AND CONSIDERATION OF BIDS*

A. Project Manager will tabulate, record, and evaluate Bids.

B. The City may reject all Bids or may reject any defective Bid.

18.0 *ACCEPTANCE OF THE BID*

A. The City will send to Low Bidder Document 00498 - Notice of Intent to Award. Acceptance by the City is conditioned upon Bidder's timely and proper submittal of documents required in Document 00495 - Post-Bid Procedures.

B. The Bid remains open to acceptance and is irrevocable for the period of time stated in Document 00410A - Bid Form – Part A.

END OF DOCUMENT

Document 00210

SUPPLEMENTARY INSTRUCTIONS TO BIDDERS

The following Paragraphs modify Document 00200 - Instructions to Bidders. Where a portion of the Instructions to Bidders is modified or deleted by these Supplementary Instructions, the unaltered portions of the Instructions to Bidders remains in effect.

2.0 – DEFINITIONS: Add the following Paragraphs to this Section:

O. *Office of Business Opportunity (OBO):* All references to Affirmative Action Contract Compliance Division (AACC) set forth in Document 00700 – General Conditions and in other documents of the Project Manual, shall refer to, and include, the Office of Business Opportunity.

3.0 - NOTICE TO BIDDERS: Add the following Paragraph to this Section:

C. The City will award this contract to a "Local Business", as that term is defined in Section 15-176 of the City of Houston Code of Ordinances ("the Code"):

- If the bid of the Local Business is less than $100,000 and is the lowest responsible bid or is within 5% of the lowest bid received, or
- If the bid of the Local Business is more than $100,000 and is the lowest responsible bid or is within 3% of the lowest bid received, and
- Unless the Director determines that such an award would unduly interfere with contract needs, as provided in Section 15-181 of the Code.

If there is no bid of a Local Business that meets these criteria, the City will award the contract to the lowest responsible bidder.

4.0 – BID DOCUMENTS: Add the following Paragraphs to this Section:

A. Add the following Paragraph A.1:

1. Bid documents may only be obtained electronically at the City's website: http://bidsets.publicworks.houstontx.gov/.

D. Add the following Paragraph D.1:

1. Copies of the City Standard Specifications and Details may be acquired at no cost on the City's website **http://documents.publicworks.houstontx.gov/document-center/specifications/index.htm**

E. The following plan rooms, whose names, addresses, phone and fax numbers were last updated on April 9, 2007, have been authorized by the City to display Bid Documents for examination:
(Note: The Bid Documents furnished to the plan rooms for examination can be in electronic format, in hard copies, or in any other formats pertaining to each City Contracting Division's discretion.)

1. AMTEK Information Services, Inc., 4001 Sherwood Lane, Houston, TX 77092, 713-956-0100, Fax 713-956-5340, Email: planroom@amtekusa.com

2. Associated Builders & Contractors, Inc., (ABC), 3910 Kirby, Suite 131, Houston, TX 77098-4151, 713-523-6222, Fax 713-874-0747. Email: lori@abchouston.org

3. Associated General Contractors (AGC-BB) Building Branch, 3825 Dacoma, Houston, TX 77092-8717, 713-843-3700, Fax 713-843-3701. Email: karla.s@agchouston.org

4. Associated General Contractors, (AGC-HHUI), Highway, Heavy Utilities and Industrial Branch, 2400 Augusta St., Suite 180, Houston, TX 77057, 713-334-7100, Fax 713-334-7130. Email: houston@agctx.org (Attention: Mel Keyser)

5. Construction Information Network, 1225 North Loop West, Suite 550, Houston, TX 77008, 713-868-2233 ext. 329, Fax 866-852-2713. Email: paul.tilford@cnsx.com

6. F. W. Dodge Corporation, 4101 Greenbriar, Suite 320, Houston, TX 77098, 713-529-4895, Fax 713-524-7639. Email: terrie_harris@mcgraw-hill.com

7. Hispanic Contractors Association of Houston (HCA-GHA), 11 Parker Road, Suite 7, Houston, TX 77241, 713-699-2732 or 832-754-3705, Fax 713-695-1556, Email: hispanicontractorsassociation@yahoo.com; or Randymagdaleno@yahoo.com

8. Houston Minority Business Development Center, 2900 Woodridge, Suite 124, Houston, TX 77087, 713-644-0821, Fax 713-644-3523. Email: gtamez@gacompanies.com

9. Reed Construction Data, 30 Technology Parkway South, Suite 100, Norcross, GA – 30092-8629. Tel. 1-800-424-3996 or 1-800-699-8640; Fax 1-800-317-0870 or 1-800-508-5370.

10. The Builders' Exchange of Texas, Inc., 3910 Kirby, Suite 131, Houston, TX 77098, 210-564-6900, Fax: 210-564-6921, Email: houston@bxtx.com

F. Add the following Paragraph F.1:

1. Designation as a City Business or Local Business

To be designated as a City or Local Business for the purposes of the Hire Houston First Program, as set out in Article XI of Chapter 15 of the Houston City Code, a bidder or proposer must submit the Hire Houston First Application and Affidavit ("HHF Affidavit") to the Director of the Mayor's Office of Business Opportunities and receive notice that the submission has been approved prior to award of a contract. Bidders are encouraged to secure a designation prior to submission of a bid or proposal.

Download the HHF Affidavit from the Office of Business Opportunities Webpage at the City of Houston e-Government Website at the following location:

www.houstontx.gov/obo/moreforms/hirehoustonfirstaffidavit.pdf

Submit the completed application as directed on the form, or submit a signed original affidavit with your bid.

5.0 - EXAMINATION OF DOCUMENTS, SITE, AND LOCAL CONDITIONS: Insert the following paragraph:

D. Add the following Paragraph D.1:

1. Work will be performed in public right-of-way. The site may be examined at any time during daylight hours.

9.0 – PREPARATION OF BIDS: Add the following Paragraph I to this Paragraph:

I. For math errors the City encounters in analyzing Bids, the following guidance will be used:

In the event of a conflict between:	The Bid Price is:
1. Individual Unit Price and Extension of that Unit Price	Individual Unit Price times Estimated Quantity
2. A Unit Price extension and total of Unit Price Extensions	Sum of all Individual Unit Price Extensions

3. Individual Alternate and total of Alternates	Sum of all Individual Alternates
4. Individual subtotals for Stipulated Price, Base Unit Prices, Extra Unit Prices, Contractor Bonus, Cash Allowances, and Alternates; and the Total Bid Price	Sum of Individual subtotals for Stipulated Price, Base Unit Prices, Extra Unit Prices, Contractor Bonus, Cash Allowances and Alternates

10.0 – BID SUBMISSION: Add the following Paragraph A.1 to this Section:

A. Add the following Paragraph A.1:

1. City Secretary will receive Bids at 900 Bagby, Room P101, Houston, Texas until 10:30 a.m., local time on May 17, 2012.

15.0 – PREBID MEETING: Add the following Paragraph A.1 to this Section:

A. Add the following Paragraph A.1:

1. A Prebid Meeting will be held at 10:00 A.M. on Tuesday, May 1, 2012, in 15th Floor, Conference Room No. 1546 at 611 Walker, Houston, Texas 77002.

END OF DOCUMENT

Document 00220

REQUEST FOR BID INFORMATION

PROJECT: Whiteheather Drainage and Paving Sub-Project IV

PROJECT No.: WBS No. M-000262-0004-4

TO: Isaac Muniz
15th Floor
611 Walker, Houston, Texas 77002

Phone No. (832) 395-2339
Fax No. (832) 395-2342
Email Addr. isaac.muniz@houstontx.gov

(Type or Print question legibly; use back if more space is needed)

_____
_____
_____
_____
_____
_____
_____
_____
_____

This request relates to _____ and/or _____
Drawing / Detail No. Specification Section No.

Attachments to this request: _____
_____
_____

_____ _____
Signature Date

_____
(Type or Print Name)

_____
(Type or Print Company Name)

END OF DOCUMENT

Document 00320

GEOTECHNICAL INFORMATION

1. DOCUMENT INCLUDES

   A. Soils investigation reports.
   B. Bidder's responsibilities.

2. RELATED DOCUMENTS

   A. Document 00340 – Environmental Information
   B. Section 02260 - Trench Safety Systems

3. SITE INVESTIGATION REPORTS

   A. In the design and preparation of Contract documents for this Project, the City and Design Consultant have used information in geotechnical reports for the investigation and analysis of soils and subsurface conditions at the Project site.

   B. An electronic copy of the report for this project is included in a CD-Rom affixed to the inside front cover of the project manual.

   C. Neither the City nor Design Consultant is responsible for accuracy or completeness of any information or data.

4. GEOTECHNICAL REPORTS

   A. Report No. 02-06-22391, prepared by the firm of Atser LP Engineering and Environmental, entitled Geotechnical Report for City of Houston, Whiteheather Drainage And Paving, dated 01-27-2012, consisting of 59 pages.

5. BIDDER RESPONSIBILITIES

   A. Bidder shall take full responsibility for interpretation and use of information contained in above listed reports for its bidding and construction purposes.

B. Bidder may perform additional soils investigations as Bidder deems appropriate.

END OF DOCUMENT

Document 00340

ENVIRONMENTAL INFORMATION

1.0 DOCUMENT INCLUDES

A. Environmental Site Assessment, if applicable.

B. Asbestos and Lead Surveys, if applicable.

C. Bidder's responsibilities.

2.0 RELATED DOCUMENTS

A. Document 00320 - Geotechnical Information

3.0 SITE INVESTIGATION REPORTS

A. In the design and preparation of Contract documents for this Project, the City and Design Consultant have used information in environmental site assessment reports for the investigation and analysis of soils and subsurface conditions at the Project site.

B. In the design and preparation of Contract documents for this Project, the City and Design Consultant have relied upon information in surveys taken for Asbestos-containing Materials (ACMs) and lead at the Project site.

C. An electronic copy of each report for this project is included in a CD-Rom affixed to the inside front cover of the project manual.

D. Neither the City nor Design Consultant is responsible for accuracy or completeness of any information or data.

4.0 REPORTS

A. Environmental Assessment Surveys

1. Report No. HE0914302, prepared by the firm of HVJ Associates, Inc., entitled Phase 1 Environmental Site Assessment City of Houston White Heather Drainage And Paving Sub-Project IV, dated 1-24-2012, consisting of 181 pages.

5.0 BIDDER RESPONSIBILITIES

A. Bidder shall take full responsibility for interpretation and use of information contained in above listed reports for bidding and construction purposes.

B. Bidder may perform additional investigations as Bidder deems appropriate.

END OF DOCUMENT

Document 00410A

BID FORM – PART A

To: **The Honorable Mayor and City Council of the City of Houston**
City Hall Annex
900 Bagby Street
Houston, Texas 77002

Project: *Whiteheather Drainage and Paving Sub-Project IV*
Project No.: WBS M-000262-0004-4
Bidder: _____
(Print or type full name of proprietorship, partnership, corporation, or joint venture.)

OFFER

A. **Total Bid Price:** Having examined the Project location and all matters referred to in Bid Documents for the Project, we, the undersigned, offer to enter into a Contract to perform the Work for the Total Bid Price shown on the signature page of this Document

B. **Security Deposit:** Included with the Bid is a Security Deposit in the amount of 10 percent of the Total Bid Price subject to terms described in Document 00200 – Instructions to Bidders.

C. **Period for Bid Acceptance:** This offer is open to acceptance and is irrevocable for 90 days from Bid Date. That period may be extended by mutual written agreement of the City and Bidder.

D. **Addenda**: All Addenda have been received. Modifications to Bid Documents have been considered and all related costs are included in the Total Bid Price.

E. **Bid Supplements:** The following documents are attached:

[X] Security Deposit *(as defined in Document 00200 – Instructions to Bidders)*
[X] Document 00450 - Bidder's Statement of MWBE/PDBE/DBE/SBE Status
[X] Document 00452 - Contractor's Submission List - Fair Campaign Ordinance Form A
[X] Document 00453 – Bidder's Statement of Residency *(not required for AIP funded project)*
[X] Document 00454 - Affidavit of Non-interest
[X] Document 00455 - Affidavit of Ownership or Control
[ ] Document 00456 - Bidder's Certificate of Compliance with Buy American Program *(required for AIP funded project)*
[X] Document 00457 – Conflicts of Interest Questionnaire (CIQ)
[ ] Document 00458 - Bidder's Certificate Regarding Foreign Trade Restriction *(required for AIP funded project)*
[ ] Document 00459 - Contractor's Statement Regarding Previous Contracts Subject to EEO *(required for AIP funded project)*
[X] Document 00470 – Pay or Play Acknowledgement Form (POP 1-A)
[ ] Others as listed: _____
_____

CONTRACT TIME

A. If offer is accepted, Contractor shall achieve Date of Substantial Completion within 365 days after Date of Commencement of the Work, subject to adjustments of Contract Time as provided in the Contract.

Document 00410A

BID FORM – PART B

1.0 TOTAL BID PRICE HAS BEEN CALCULATED BY BIDDER, USING THE FOLLOWING COMPONENT PRICES AND PROCESS (PRINT OR TYPE NUMERICAL AMOUNTS):

A. STIPULATED PRICE: $ N/A

(Total Bid Price; minus Base Unit Prices, Extra Unit Prices, Cash Allowances and All Alternates, if any)

B. BASE UNIT PRICE TABLE:

Item No.	Spec. Ref.	Base Unit Short Title	Unit of Measure	Estimated Quantity	Unit Price (this column controls)	Total in figures
1	01502	Mobilization	LS	1	$160,000.00 (1)	$160,000.00 (1)
2	01555	Traffic Control & Regulation	LS	1	$120,000.00 (2)	$120,000.00 (2)
3	01555	Provide and install low profile concrete barriers	LF	2,000		
4	01555	Relocate low profile concrete barriers	LF	2,000		
5	01555	Remove low profile concrete barriers	LF	2,000		
6	01555	Flagmen	LS	1	$93,528.00 (2)	$93,528.00 (2)
7	01555	Remove and Replace Permanent Type III Barricaide	EA	5		
8	02260	Trench safety system for trench excavations	LF	9,705		
9	01562	Tree and plant protection	LS	1		
10	Ref. Detail Drawing	Checker plate complete in place	SF	980		
11	01570	Inlet protection barrier	LF	2,320		
12	01570	Filter fabric fence	LF	22,240		

B. BASE UNIT PRICE TABLE:

Item No.	Spec. Ref.	Base Unit Short Title	Unit of Measure	Estimated Quantity	Unit Price (this column controls)	Total in figures
13	01575	Stabilized construction exit (install and remove)	SY	535		
14	01578	Ground water control for open-cut construction	LF	8,524		
15	02086	Adjust existing manhole frame and cover to new grade	EA	20		
16	02086	Adjust existing valve box to new grade	EA	6		
17	02221	Remove and dispose 4-inch diameter water line (all types of materials)	LF	250		
18	02221	Remove and dispose 6-inch diameter water line (all types of materials)	LF	368		
19	02221	Remove and dispose 8-inch diameter water line (all types of materials)	LF	65		
20	02221	Remove and dispose 12-inch diameter water line (all types of materials)	LF	530		
21	02221	Remove and dispose 18-inch diameter MRCP/RCP/CMP sewer	LF	750		
22	02221	Remove and dispose 21-inch diameter MRCP/RCP/CMP sewer	LF	100		
23	02221	Remove and dispose 24-inch diameter MRCP/RCP/CMP sewer	LF	40		
24	02221	Remove and dispose 30-inch diameter MRCP/RCP/CMP sewer	LF	1,200		
25	02221	Remove and dispose 36-inch diameter MRCP/RCP/CMP sewer	LF	160		
26	02221	Remove and dispose manhole	EA	8		
27	02221	Remove and dispose 18-inch diameter RCP/MRCP/CMP storm sewer lead	LF	500		
28	02221	Remove and dispose 24-inch diameter RCP/MRCP/CMP storm sewer lead	LF	50		
29	02221	Remove and dispose existing storm inlet	EA	30		

B. BASE UNIT PRICE TABLE:

Item No.	Spec. Ref.	Base Unit Short Title	Unit of Measure	Estimated Quantity	Unit Price (this column controls)	Total in figures
30	02222	Abandonment of sewers (18" diameter storm sewer)	LF	100		
31	02222	Abandonment of sewers (21" diameter storm sewer)	LF	100		
32	02222	Abandonment of sewers (24" diameter storm sewer)	LF	1,100		
33	02222	Abandonment of sewers (storm manholes)	EA	4		
34	02714	Flexible base course for temporary driveways (6-inch thick, install and remove) (residential)	EA	155		
35	02714	Flexible base course for temporary driveways (6-inch thick, install and remove) (commercial)	EA	10		
36	02741	Asphaltic Concrete Pavement (temporary cross street intersections) (2" surface, 8" base) (install and remove)	SY	1,640		
37	02821 and Document 01110	Remove, dispose and replace existing fence including gate structures (all types and heights)	LF	2,600		
38	02915	Tree planting	EA	19		
39	01562	Remove and dispose existing trees	EA	41		
40	01562	Zero curb cut operation	LF	409		
41	02915	Remove and relocate tree	EA	2		
42	02915	Remove, temporary store, and replant tree	EA	2		
43	02922	Sodding	SY	27,185		
44	01110	Relocate existing sprinklers - rotary head sprinkler	EA	10		

B. BASE UNIT PRICE TABLE:

Item No.	Spec. Ref.	Base Unit Short Title	Unit of Measure	Estimated Quantity	Unit Price (this column controls)	Total in figures
45	01110	Relocate existing sprinklers - spray head sprinkler	EA	10		
46	01110	Relocate irrigation pipe - all sizes	LF	20		
TOTAL BASE UNIT PRICES						

REST OF PAGE INTENTIONALLY LEFT BLANK

Bidder's Initials ( )

B. BASE UNIT PRICE TABLE:

UNIT PRICES FOR - PAVING

Item No.	Spec. Ref.	Base Unit Short Title	Unit of Measure	Estimated Quantity	Unit Price (this column controls)	Total in figures
47	02221	Remove and dispose of concrete sidewalks and driveways (all thicknesses)	SY	9,167		
48	02221	Remove and dispose of concrete pavement and base materials with or without asphalt surface and with or without curbs (all thicknesses)	SY	40,821		
49	02315	Roadway excavation	CY	5,338		
50	02336	Lime - For Stabilized Subgrade (6" Depth)	SY	29,569		
51	02336	Lime - For Stabilized Subgrade (8" Depth)	SY	16,511		
52	02336	Lime-Stabilized Subgrade (8% By Weight = 40 Lbs Per SY)	TON	904		
53	02581	Street lighting conduit (2-inch pvc, schedule 40)	LF	5,593		
54	02581	Street lighting conduit (2-inch pvc, schedule 80)	LF	2,397		
55	Drawings	Furnish and install 78.5" X 80" speed cushion (made of 100% recycled rubber and two-part polyurethane binder) including metal dowels, anchor bolts and installed as specified	EA	8		
56	01554	Furnish and install traffic sign and post @ speed cushion locations	EA	4		
57	02751	8-inch reinforced concrete pavement	SY	19,251		
58	02751	8-inch reinforced concrete pavement (high early strength)	SY	15,797		
59	02751	12-inch reinforced concrete pavement (high early strength)	SY	5,775		
60	02752	Board expansion joint with load transfer device and sealant.	LF	10,200		
61	02752	Horizontal dowels (24" long)	EA	246		
62	02752	Preformed expansion joints (for sidewalk behind back of curb)	LF	3,041		

B. BASE UNIT PRICE TABLE:

UNIT PRICES FOR - PAVING

Item No.	Spec. Ref.	Base Unit Short Title	Unit of Measure	Estimated Quantity	Unit Price (this column controls)	Total in figures
63	02754	6-inch concrete driveway, including excavation, subgrade/base material, sawcutting and all joints (construction, expansion and surface)	SF	43,526		
64	02754	7-inch concrete driveway, including excavation, subgrade/base material, sawcutting and all joints (construction, expansion and surface)	SF	5,635		
65	02762	Blast clean 4-inch wide roadway lane markings, all types	LF	10,466		
66	02762	Blast clean 8-inch wide roadway lane markings, all types	LF	160		
67	02762	Blast clean 12-inch wide roadway lane markings, all types	LF	1,179		
68	02762	Blast clean 24-inch wide roadway lane markings, all types	LF	2,174		
69	02762	Blast clean word, all types	EA	2		
70	02762	Blast clean symbol, all types	EA	2		
71	02764	Raised Reflective Pavement Markers (double sided) (Type II Blue-Blue), double reflectorized blue traffic markers shall be placed 6-inches offset of the centerline of all fire hydrant locations by the contractor, hydrants located at intersections shall have a button placed on each street	EA	25		
72	02764	Raised Reflective Pavement Markers Type II-A-A	EA	220		
73	02764	Raised Reflectorized White Pavement Markers Type II-C-C	EA	219		
74	02764	Raised Reflective Pavement Markers Type II-C-R	EA	32		
75	02764	Raised Nonreflectorized White Pavement Markers, Button	EA	32		
76	02765	Temporary and removable reflectorized pavement markings - yellow (4" wide), install and remove	LF	7,840		
77	02765	Temporary and removable reflectorized pavement markings - white (4" wide), install and remove	LF	2,500		

B. BASE UNIT PRICE TABLE:

UNIT PRICES FOR - PAVING

Item No.	Spec. Ref.	Base Unit Short Title	Unit of Measure	Estimated Quantity	Unit Price (this column controls)	Total in figures
78	02767	Thermoplastic pavement markings, 4-inch wide yellow solid	LF	7,610		
79	02767	Thermoplastic pavement markings, 4-inch wide white dashed	LF	2,850		
80	02767	Thermoplastic pavement markings, 8-inch wide white solid	LF	160		
81	02767	Thermoplastic pavement markings, 12-inch wide white solid	LF	470		
82	02767	Thermoplastic pavement markings, 12-inch wide yellow solid	LF	505		
83	02767	Thermoplastic pavement markings, 24-inch wide white solid	LF	2,052		
84	02767	Thermoplastic pavement markings, Symbol	EA	2		
85	02767	Thermoplastic pavement markings, Word	EA	2		
86	02771	6-inch concrete curb	LF	17,937		
87	02771	7-inch and greater concrete curb (low profile retaining wall)	LF	200		
88	02775	4-1/2-inch concrete sidewalk	SF	75,590		
89	02775	Concrete curb ramp	SF	5,450		
90	1110/ 02506	3" PVC yard drain and all required fixtures	LF	200		
91	02221	Remove Existing Pole Foundation	EA	8		
92	02582	Pedestal Pole Assembly with Foundation	EA	6		
93	02582	25' Mast Arm Pole Assembly with Foundation	EA	3		
94	02582	30' Mast Arm Pole Assembly with Foundation	EA	3		
95	02893	Electrical Service Pedestal Assembly - 100 Amp ("Square D" Breakers Included)	EA	1		
96	02893	Overhead Street Name Signs	EA	6		

B. BASE UNIT PRICE TABLE:

UNIT PRICES FOR - PAVING

Item No.	Spec. Ref.	Base Unit Short Title	Unit of Measure	Estimated Quantity	Unit Price (this column controls)	Total in figures
97	02893	Sign, "One Way", R6-1, 36" x 12"	EA	4		
98	02893	Remove and Salvage Existing Traffic Signals	EA	1		
99	16710	Type "A" Pull Box with Apron, Gravel and Ground Rod	EA	8		
100	16710	Type "B" Pull Box with Apron, Gravel and Ground Rod	EA	10		
101	16711	Conduit, 2-IN SCH 80 PVC Trench	LF	121		
102	16711	Conduit, 2 1/2-IN SCH 80 PVC Trench	LF	22		
103	16711	Conduit, 3-IN SCH 80 PVC Trench	LF	1,001		
104	16712	Conduit, 3-IN SCH 80 PVC Bore	LF	110		
105	16711	Conduit, 2-IN SCH 80 PVC Bridge Mount	LF	94		
106	16711	Conduit, 4-IN SCH 80 PVC Trench	LF	451		
107	16711	Conduit, 4-IN SCH 80 PVC Bore	LF	429		
108	16715	3-Section Vehicle Signal Head Assembly (RYG)(Horizontal)	EA	12		
109	16719	LED Pedestrian Signal Head Assembly (Symbolic) (Countdown)	EA	12		
110	16720	Traffic Signal Cables, Detector Lead-In Cable 2/C-14 AWG IMSA 50-2-1984	LF	4,224		
111	16720	Traffic Signal Cables, 3/C-#14 AWG Solid Cable	LF	2,024		
112	16720	Traffic Signal Cables, 5/C-#14 AWG Solid Cable	LF	2,024		
113	16720	Traffic Signal Cables, 7/C-#14 AWG Solid Cable	LF	1,980		
114	16720	#4 XHHW Service Wire	LF	22		
115	16720	#4 AWG Bare Solid Wire	LF	22		

B. BASE UNIT PRICE TABLE:

UNIT PRICES FOR - PAVING

Item No.	Spec. Ref.	Base Unit Short Title	Unit of Measure	Estimated Quantity	Unit Price (this column controls)	Total in figures
116	16720	#8 AWG Bare Solid Wire	LF	677		
117	16724	Emergency Vehicle Preemption System	EA	1		
118	16727	Loop Detector Saw Cut with Loop Wire	LF	768		
119	16730	ITS Controller Cabinet Assembly (Model 340)(Type 2070L)	EA	1		
120	02893-10C	Controller Cabinet Foundation with Apron	EA	1		
121	16750	Accessible Pedestrian Pushbutton Station	EA	12		
TOTAL BASE UNIT PRICES FOR PAVING						

B. BASE UNIT PRICE TABLE:

UNIT PRICES FOR - STORM SEWER UTILITY

Item No.	Spec. Ref.	Base Unit Short Title	Unit of Measure	Estimated Quantity	Unit Price (this column controls)	Total in figures
122	02081 02082 02087	Type "C" manhole for 42-inch diameter and smaller sewers	EA	50		
123	02081 02082 02087	Type "C" manhole for 42-inch diameter and smaller sewers (extra depth)	LF	50		
124	02081 02082 02087	Type "C" manhole for 48-inch to 72-inch diameter sewers	EA	15		
125	02081 02082 02087	Type "C" manhole for 48-inch to 72"-inch diameter sewers (extra depth)	LF	35		
126	02081 02082 02087	Type "C" manhole for 78-inch diameter and greater sewers	EA	1		
127	02081 02082 02087	Type "C" manhole for 78"-inch diameter and greater sewers (extra depth)	LF	5		
128	02084	24-inch diameter ring grate	EA	1		
129	02631	24-inch diameter storm sewer by open cut (RCP)	LF	2,919		
130	02631	30-inch diameter storm sewer by open cut (RCP)	LF	1,155		
131	02631	36-inch diameter storm sewer by open cut (RCP)	LF	980		
132	02631	42-inch diameter storm sewer by open cut (RCP)	LF	1,282		
133	02631	48-inch diameter storm sewer by open cut (RCP)	LF	661		
134	02631	38-inch X 24-inch horizontal elliptical storm sewer by open cut (RCP)	LF	43		
135	02631	45-inch X 29-inch horizontal elliptical storm sewer by open cut (RCP)	LF	445		
136	02631	60-inch X 38-inch horizontal elliptical storm sewer by open cut (RCP)	LF	356		
137	02631	68-inch X 43-inch horizontal elliptical storm sewer by open cut (RCP)	LF	312		
138	02631	24-inch diameter storm sewer leads	LF	829		

B. BASE UNIT PRICE TABLE:

UNIT PRICES FOR - STORM SEWER UTILITY

Item No.	Spec. Ref.	Base Unit Short Title	Unit of Measure	Estimated Quantity	Unit Price (this column controls)	Total in figures
139	02631	30-inch diameter storm sewer leads	LF	58		
140	02632	Cast-in-place headwall and wingwalls	EA	2		
141	02633	Type "BB" inlet	EA	48		
142	02633	Type "C-1" inlet	EA	4		
143	02633	Type "C-2" inlet	EA	2		
144	02633	Type "C-2A" inlet	EA	4		
145	HCFCD 02364	Filter Dams (Type 3)	LF	100		
146	HCFCD 02376	Concrete channel lining (remove and replace existing concrete channel lining including all toewalls, seal slab, grade beams, joint materials, weep holes, geotextiles, saw cutting and appurtenances)	SY	870		
147	HCFCD 02377	Rectangular concrete channel (remove and replace existing concrete channel including all toewalls, seal slab, grade beams, joint materials, weep holes, geotextiles, saw cutting and appurtenances)	SY	50		
TOTAL BASE UNIT PRICES FOR STORM						

REST OF PAGE INTENTIONALLY LEFT BLANK

B. BASE UNIT PRICE TABLE:

UNIT PRICES FOR - WASTEWATER UTILITY

Item No.	Spec. Ref.	Base Unit Short Title	Unit of Measure	Estimated Quantity	Unit Price (this column controls)	Total in figures
TOTAL BASE UNIT PRICES FOR WASTEWATER						**$0.00**

REST OF PAGE INTENTIONALLY LEFT BLANK

B. BASE UNIT PRICE TABLE:

UNIT PRICES FOR - WATER UTILITY

Item No.	Spec. Ref.	Base Unit Short Title	Unit of Measure	Estimated Quantity	Unit Price (this column controls)	Total in figures
148	02511	6-inch diameter water main by open-cut	LF	645		
149	02511	6-inch diameter water main by augering	LF	565		
150	02511	8-inch diameter water main by open-cut	LF	320		
151	02511	8-inch diameter water main by augering	LF	5,345		
152	02511	8-inch diameter water main by open-cut (ductile iron w/restrained joints)	LF	184		
153	02511	12-inch diameter water main by augering	LF	3,440		
154	02511	12-inch diameter water main by open-cut (ductile iron w/restrained joints)	LF	407		
155	02512	3/4-inch to 1-inch diameter copper service line with meter box, short side	EA	84		
156	02512	3/4-inch to 1-inch diameter copper service line with meter box, short side (temporary)	EA	84		
157	02512	3/4-inch to 1-inch diameter copper service line with meter box, long side	EA	61		
158	02512	3/4-inch to 1-inch diameter copper service line with meter box, long side (temporary)	EA	61		
159	02512	1-1/2-inch to 2-inch diameter copper service line with meter box, short side	EA	1		
160	02512	1-1/2-inch to 2-inch diameter copper service line with meter box, long side	EA	2		
161	2513	2" wet connection	EA	1		
162	2513	6" wet connection	EA	1		
163	2513	8" wet connection	EA	2		
164	2513	12" wet connection	EA	2		
165	02516	2" cut, plug and abandon	EA	1		
166	02516	4" cut, plug and abandon	EA	3		

B. BASE UNIT PRICE TABLE:

UNIT PRICES FOR - WATER UTILITY

Item No.	Spec. Ref.	Base Unit Short Title	Unit of Measure	Estimated Quantity	Unit Price (this column controls)	Total in figures
167	02516	6" cut, plug and abandon	EA	7		
168	02516	8" cut, plug and abandon	EA	4		
169	02516	12" cut, plug and abandon	EA	4		
170	02516	6" cut and plug	EA	5		
171	02516	8" cut and plug	EA	8		
172	02516	12" cut and plug	EA	23		
173	02520	Fire hydrant assembly, all depths, including 6-inch diameter gate valve and box	EA	18		
174	02520	6-inch diameter fire hydrant branch by open-cut	LF	270		
175	02520	Remove and salvage existing fire hydrant and branch	EA	18		
176	02525	12-inch by 12-inch diameter tapping sleeve and valve with box	EA	2		
177	02525	12-inch by 24-inch diameter tapping sleeve and valve with box	EA	1		
178	02525	2-inch diameter blow-off valve with box	EA	4		
179	02511 02518	8-inch Steel Water Line For Aerial Crossing (steel pipe, pipe guards and all steel appurtenances Complete In Place	LF	100		
180	01110	8-inch Aerial Crossing Concrete Structure (concrete piles and concrete bent cap), Complete In Place	LS	1		
181	02511 02518	12-inch Steel Water Line For Aerial Crossing (steel pipe, pipe guards and all steel appurtenances Complete In Place	LF	100		
182	01110	12-inch Aerial Crossing Concrete Structure (concrete piles and concrete bent cap), Complete In Place	LS	1		

B. BASE UNIT PRICE TABLE:

UNIT PRICES FOR - WATER UTILITY

Item No.	Spec. Ref.	Base Unit Short Title	Unit of Measure	Estimated Quantity	Unit Price (this column controls)	Total in figures
183	02524	2-inch diameter Air Release Valve For Aerial Crossing	EA	2		
184	02526	Relocate and reinstall meter with new box	EA	28		
TOTAL BASE UNIT PRICES FOR WATER						

REST OF PAGE INTENTIONALLY LEFT BLANK

C. EXTRA UNIT PRICE TABLE:

Item No.	Spec. Ref.	Base Unit Short Title	Unit of Measure	Estimated Quantity	Unit Price (this column controls)	Total in figures
185	02221	Remove miscellaneous concrete and masonry	CY	100	$15.00 (2)	$1,500.00 (2)
186	02317	6" Overexcavation of trench bottom	LF	100	$3.00 (2)	$300.00 (2)
187	02318	Excavation around obstructions	CY	100	$10.00 (2)	$1,000.00 (2)
188	02318	Extra hand excavation	CY	100	$20.00 (2)	$2,000.00 (2)
189	02318	Extra machine excavation	CY	100	$10.00 (2)	$1,000.00 (2)
190	02318	Extra placement of backfill material	CY	100	$15.00 (2)	$1,500.00 (2)
191	02318	Extra placement of granular fill	CY	100	$20.00 (2)	$2,000.00 (2)
192	02318	Extra select backfill	CY	100	$20.00 (2)	$2,000.00 (2)
193	02321	Extra cement-stabilized sand	CY	100	$25.00 (2)	$2,500.00 (2)
194	02511	Extra ductile Iron compact fittings in place complete in place	TON	1	$3,000.00 (2)	$3,000.00 (2)
195	03315	Extra Class "A" concrete with or without forms (complete-in-place)	CY	100	$100.00 (2)	$10,000.00 (2)
TOTAL EXTRA UNIT PRICES						

D. CASH ALLOWANCE TABLE:

Item No.	Spec. Ref.	Base Unit Short Title			Unit Price (this column controls)	Total in figures
1	01110	New or removal and relocation of existing street lights by Centerpoint Energy, including all related appurtenances, complete in place			$37,886.00 (1)	$37,886.00 (1)
2	01110	City of Houston, Street cut permits			$10,000.00 (1)	$10,000.00 (1)
TOTAL CASH ALLOWANCES						$47,886.00 (1)

E. ALTERNATES TABLE:

Alternative No.	Alternate Short Title	Total Price for Alternate in figures
	Not Applicable	
TOTAL ALTERNATES		**$0.00**

REST OF PAGE INTENTIONALLY LEFT BLANK

F. TOTAL BID PRICE: _____

(Add Totals for Items A., B., C., D., and E. above)

2.0 SIGNATURES: By signing this Document, I agree that I have received and reviewed all Addenda and considered all costs associated with the Addenda in calculating the Total Bid Price.

Bidder: _____
(Print or type full name of your proprietorship, partnership, corporation, or joint venture.*)

** By: _____
Signature Date

Name: _____
(Print or type name) Title

Address: _____
(Mailing)

_____
(Street, if different)

Telephone and Fax Number: _____
(Print or type numbers)

* If Bid is a joint venture, add additional Bid Form signature sheets for each member of the joint venture.

** Bidder certifies that the only person or parties interested in this offer as principals are those named above. Bidder has not directly or indirectly entered into any agreement, participated in any collusion, or otherwise taken any action in restraint of free competitive bidding.

Note: This document constitutes a government record, as defined by § 37.01 of the Texas Penal Code. Submission of a false government record is punishable as provided in § 37.10 of the Texas Penal Code.

Footnotes for Tables B through E:

(1) Fixed Unit Price determined prior to Bid. Cannot be adjusted by the Bidder.

(2) Minimum Bid Price determined prior to Bid. Can be increased by the Bidder by crossing out the Minimum and noting revised price on the line above.

(3) Maximum Bid Price determined prior to Bid. Can be decreased by Bidder by crossing out the Maximum and noting revised price on the line above.

(4) Fixed Range Unit Price determined prior to Bid. Unit Price can be adjusted by Bidder to any amount within the range defined by crossing out prices noted and noting revised price on the line above.

END OF DOCUMENT

Document 00430

BIDDER'S BOND

THAT WE, _____, as Principal,
(Bidder)
("Bidder"), and the other subscriber hereto, _____, as Surety, do hereby acknowledge ourselves to be held and firmly bound to the City of Houston, a municipal corporation, in the sum of _____ Dollars ($_____) (an amount equal to 10 percent of the Total Bid Price, including Cash Allowances and Alternates, if any, for the payment of which sum, well and truly to be made to the City of Houston and its successors, the Bidder and Surety do bind themselves, their heirs, executors, administrators, successors, and assigns, jointly and severally.

THE CONDITIONS OF THIS OBLIGATION ARE SUCH THAT:

WHEREAS, the Bidder has submitted on or about this day a proposal offering to perform the following:

_____

_____
(Project Name, Location and Number)

in accordance with the Drawings, Specifications, and terms and conditions related thereto to which reference is hereby made.

NOW, THEREFORE, if the Bidder's offer as stated in the Document 00410 – Bid Form is accepted by the City, and the Bidder executes and returns to the City Document 00520 – Agreement, required by the City, on the forms prepared by the City, for the Work and also executes and returns the same number of the Performance, Payment and Maintenance Bonds (such bonds to be executed by a Corporate Surety authorized by the State Board of Insurance to conduct insurance business in the State of Texas, and having an underwriting limitation in at least the amount of the bond) and other submittals as required by Document 00495 - Post-Bid Procedures, in connection with the Work, within the Contract Time, then this obligation shall become null and void; otherwise it is to remain in full force and effect.

If Bidder is unable to or fails to perform the obligations undertaken herein, the undersigned Bidder and Surety shall be liable to the City for the full amount of this obligation which is hereby acknowledged as the amount of damages which will be suffered by the City on account of the failure of such Bidder to perform such obligations, the actual amount of such damages being difficult to ascertain.

Notices required or permitted hereunder shall be in writing and shall be deemed delivered when actually received or, if earlier, on the third day following deposit in a United States Postal Service post office or receptacle, with proper postage affixed (certified mail, return receipt requested), addressed to the respective other Party at the address prescribed in the Contract documents, or at such other address as the receiving Party may hereafter prescribe by written notice to the sending Party.

IN WITNESS THEREOF, the Bidder and Surety have signed and sealed this instrument on the respective dates written below their signatures and have attached current Power of Attorney.

ATTEST, SEAL: (if a corporation)
WITNESS: (if not a corporation)

By: _____
Name:
Title:

_____
(Name of Bidder)

By: _____
Name:
Title:
Date:

ATTEST/SURETY WITNESS: (SEAL)

_____
(Full Name of Surety)

_____
(Address of Surety for Notice)

_____

_____
(Telephone Number of Surety)

By: _____
Name:
Title:
Date:

By: _____
Name:
Title:
Date:

END OF DOCUMENT

Document 00450

BIDDER'S STATEMENT OF MWBE/PDBE/DBE/SBE STATUS

This certifies that the status of the Bidder, _____, in
(Bidder's Name)
regard to the City of Houston Code of Ordinances, Chapter 15, Article V, relating to City-wide percentage goals for contracting with Minority and Women-owned Business Enterprises (MWBE) and Disadvantaged Business Enterprises (DBE), Chapter 15, Article VI, relating to City-wide percentage goals for contracting with Persons with Disabilities Business Enterprises (PDBE) and Chapter 15, Article IX, relating to City-wide percentage goals for contracting with a Small Business Enterprise (SBE) is as follows:

1. Bidder (individual, partnership, corporation) is [__] is not [__] a Minority Business Enterprise as certified by the Affirmative Action and Contract Compliance Division.

2. Bidder (individual, partnership, corporation) is [__] is not [__] a Women-owned Business Enterprise as certified by the Affirmative Action and Contract Compliance Division.

3. Bidder (individual, partnership, corporation) does [__] does not [__] declare itself to be a Persons with Disabilities Business Enterprise as defined above.

4. Bidder (individual, partnership, corporation) does [__] does not [__] declare itself to be a Disadvantaged Business Enterprise as defined above.

5. Bidder (individual, partnership, corporation) does [__] does not [__] declare itself to be a Small Business Enterprise as defined above.

Signature: _____

Title: _____

Date: _____

END OF DOCUMENT

Document 00452
Form A
CONTRACTOR SUBMISSION LIST
CITY OF HOUSTON FAIR CAMPAIGN ORDINANCE

The City of Houston Fair Campaign Ordinance makes it unlawful for a Contractor to offer any contribution to a candidate for City elective office (including elected officers-elect) during a certain period of time prior to and following the award of the Contract by the City Council. The term "Contractor" includes proprietors of proprietorships, partners or joint venturers having an equity interest of 10 percent or more for the partnership or joint venture, and officers, directors and holders of 10 percent or more of the outstanding shares of corporations. Submission of a statement disclosing the names and business addresses of each of those persons is required with each Bid/Proposal for a City Contract. See Chapter 18 of the City of Houston Code of Ordinances for further information.

This list is submitted under the provisions of Section 18-36(b) of the City of Houston Code of Ordinances in connection with the attached Bid/Proposal of:

Firm or Company Name: _____
Firm or Company Address: _____
_____

The firm/company is organized as indicated below. Check one as applicable and attach additional pages if needed to supply the required names and addresses.

[ ] SOLE PROPRIETOR

Name _____ _____
Proprietor Address

[ ] A PARTNERSHIP

LIST EACH PARTNER HAVING EQUITY INTEREST OF 10% OR MORE OF PARTNERSHIP (IF NONE STATE "NONE")

Name _____ _____
Partner Address

Name _____ _____
Partner Address

[ ] A CORPORATION

LIST ALL DIRECTORS OF THE CORPORATION (IF NONE STATE "NONE")

Name _____ _____
Director Address

Name _____ _____
Director Address

Name _____ _____
Director Address

LIST ALL OFFICERS OF THE CORPORATION (IF NONE STATE "NONE")

Name _____ _____
Officer Address

Name _____ _____
Officer Address

Name _____ _____
Officer Address

LIST ALL INDIVIDUALS OWNING 10% OR MORE OF OUTSTANDING SHARES OF STOCK OF THE CORPORATION (IF NONE STATE "NONE")

Name _____ _____
Owner Address

Name _____ _____
Owner Address

Name _____ _____
Owner Address

I certify that I am duly authorized to submit this list on behalf of the firm, that I am associated with the firm in the capacity noted below, and that I have knowledge of the accuracy of the information provided herein.

_____
Signature

_____
Printed Name

_____
Title

Note: This list constitutes a government record as defined by § 37.01 of the Texas Penal Code.

END OF DOCUMENT

Document 00453

BIDDER'S STATEMENT OF RESIDENCY

The City may not award a contract for general construction, services, or purchases to a Nonresident Bidder unless Nonresident's Bid is lower than the lowest Bid submitted by a responsible Texas Resident Bidder by the same amount that a Texas Resident bidder would be required to underbid the Nonresident Bidder to obtain a comparable contract in the state in which Nonresident's principle place of business is located.

1. This certifies that the Bidder, _____, is a State of Texas Resident Bidder as defined in TEX. GOVT. CODE ANN. § 2252.001(4) (Vernon 1994).

   _____ _____
   Signature Title

   "Texas Resident Bidder" means a bidder whose principal place of business is in this State, and includes a Contractor whose ultimate parent company or majority owner has its principal place of business in this State. *When bidder cannot sign 1, above, proceed to 2.*

2. a. _____ is a resident of _____ and is a Nonresident Bidder as defined in TEX. GOVT. CODE ANN. § 2252.001(3) (Vernon 1994).

   _____ _____
   Signature Title

   "Nonresident Bidder" means a bidder whose principal place of business is not in this State, but excludes a contractor whose ultimate parent company or majority owner has its principal place of business in this State.

   b. The State of _____ _____ have a state statute giving
   Bidder's resident state Does or Does Not
   preference to resident bidders.

   _____ _____
   Signature Title

   If the answer to 2.b is that your state does have a statute giving preference to resident bidders, then you must provide a copy and proceed to 3.

3. A copy of the State of _____ statute is attached.

   _____ _____
   Signature Title

   _____
   Date

END OF DOCUMENT

Document 00454

AFFIDAVIT OF NON-INTEREST

BEFORE ME, the undersigned authority, a Notary Public in and for the State of Texas, on this day personally appeared _____, who
Affiant

being by me duly sworn on his oath stated that he is _____, of
Title

_____,
Name of Firm

the firm named and referred to and in the foregoing; and that he knows of no officer, agent, or employee of the City of Houston being in any manner interested either directly or indirectly in such Contract.

_____
Affiant's Signature

SWORN AND SUBSCRIBED before me on _____.
Date

_____
Notary Public in and for the State of TEXAS

_____
Print or type name

My Commission Expires: _____
Expiration Date

END OF DOCUMENT

ORIG. DEPT.: DEPARTMENT OF PUBLIC WORKS AND ENGINEERING **FILE/I.D. NO.:** M-000262-0004-4

INSTRUCTION: ENTITIES USING AN ASSUMED NAME SHOULD DISCLOSE SUCH FACT TO AVOID REJECTION OF THE AFFIDAVIT. THE FOLLOWING FORMAT IS RECOMMENDED: CORPORATE/LEGAL NAME DBA ASSUMED NAME.

STATE OF _____ §
§ **AFFIDAVIT OF OWNERSHIP OR CONTROL**
COUNTY OF _____ §

BEFORE ME, the undersigned authority, on this day personally appeared _____ [*FULL NAME*] (hereafter "Affiant"), _____ [*STATE TITLE/CAPACITY WITH CONTRACTING ENTITY*] of _____ [*CONTRACTING ENTITY'S CORPORATE/LEGAL NAME*] ("Contracting Entity"), who being by me duly sworn on oath stated as follows:

1. Affiant is authorized to give this affidavit and has personal knowledge of the facts and matters herein stated.

2. Contracting Entity seeks to do business with the City in connection with _____ _____ [*DESCRIBE PROJECT OR MATTER*] which is expected to be in an amount that exceeds $50,000.

3. The following information is submitted in connection with the proposal, submission or bid of Contracting Entity in connection with the above described project or matter.

4. Contracting Entity is organized as a business entity as noted below (check box as applicable).

FOR PROFIT ENTITY:

[ ] SOLE PROPRIETORSHIP
[ ] CORPORATION
[ ] PARTNERSHIP
[ ] LIMITED PARTNERSHIP
[ ] JOINT VENTURE
[ ] LIMITED LIABILITY COMPANY
[ ] OTHER (Specify type in space below)

NON-PROFIT ENTITY:

[ ] NON-PROFIT CORPORATION
[ ] UNINCORPORATED ASSOCIATION

_____

_____

_____

5. The information shown below is true and correct for the Contracting Entity and all owners of 5% or more of the Contracting Entity and, where the Contracting Entity is a non-profit entity, the required information has been shown for each officer, *i.e.*, president, vice-president, secretary, treasurer, etc. ***[NOTE: IN ALL CASES, USE FULL NAMES, LOCAL BUSINESS AND RESIDENCE ADDRESSES AND TELEPHONE NUMBERS. DO NOT USE POST OFFICE BOXES FOR ANY ADDRESS. INCLUSION OF E-MAIL ADDRESSES IS OPTIONAL, BUT RECOMMENDED. ATTACH ADDITIONAL SHEETS AS NEEDED.]***

Contracting Entity

Name: _____

Business Address *[NO./STREET]* _____

[CITY/STATE/ZIP CODE] _____

Telephone Number (_____)_____

Email Address *[OPTIONAL]* _____

Residence Address *[NO./STREET]* _____

[CITY/STATE/ZIP CODE] _____

Telephone Number (_____)_____

Email Address *[OPTIONAL]* _____

5% Owner(s) or More (IF NONE, STATE "NONE.")

Name: _____

Business Address *[NO./STREET]* _____

[CITY/STATE/ZIP CODE] _____

Telephone Number (_____)_____

Email Address *[OPTIONAL]* _____

Residence Address *[NO./STREET]* _____
[CITY/STATE/ZIP CODE] _____

Telephone Number (_____)_____

Email Address *[OPTIONAL]* _____

6. *Optional Information*

Contracting Entity and/or _____ [***NAME OF OWNER OR NON-PROFIT OFFICER***] is actively protesting, challenging or appealing the accuracy and/or amount of taxes levied against _____ [***CONTRACTING ENTITY, OWNER OR NON-PROFIT OFFICER***] as follows:

Name of Debtor: _____

Tax Account Nos. _____

Case or File Nos. _____

Attorney/Agent Name _____

Attorney/Agent Phone No. (_____)_____

Tax Years _____

Status of Appeal ***[DESCRIBE]*** _____

_____

_____

_____

Affiant certifies that he or she is duly authorized to submit the above information on behalf of the Contracting Entity, that Affiant is associated with the Contracting Entity in the capacity noted above and has personal knowledge of the accuracy of the information provided herein, and that the information provided herein is true and correct to the best of Affiant's knowledge and belief.

_____
Affiant

SWORN TO AND SUBSCRIBED before me this _____ day of _____, 20_____.

(Seal)

_____
Notary Public

NOTE:
This affidavit constitutes a **government record** as defined by Section 37.01 of the Texas Penal Code. Submission of a false government record is punishable as provided in Section 37.10 of the Texas Penal Code. Attach additional pages if needed to supply the required names and addresses.

END OF DOCUMENT

Document 00457

Conflict of Interest Questionnaire

****

Print out latest version of CIQ form from website listed below:

****

Local Government Code Chapter 176 requires Bidders with the City of Houston ("City") to file a Conflict of Interest Questionnaire with the City Secretary of the City of Houston.

The Conflict of Interest Questionnaire is available for downloading on the Texas Ethics Commission's website at: http://www.ethics.state.tx.us/forms/CIQ.pdf. The completed Conflict of Interest Questionnaire will be posted on the City Secretary's website. Also you will find a list of the City Local Government Officers on the City Secretary's website.

For your convenience the CIQ form is attached as part of this document. Although the City has provided this document for the Bidders convenience, it is the Bidders responsibility to submit the latest version of the CIQ form as promulgated by the Texas Ethics Commission.

The Failure of any Bidder to comply with this law is a Class C misdemeanor.

END OF DOCUMENT

Document 00459

CONTRACTOR'S STATEMENT REGARDING PREVIOUS CONTRACTS SUBJECT TO EQUAL EMPLOYMENT OPPORTUNITY

Section 60-1.7(b) of the Regulations of the Secretary of Labor requires each bidder or prospective prime contractor and proposed subcontractor, where appropriate, to state in the bid or at the outset of negotiations for the contract whether it has participated in any previous contract or subcontract subject to the equal opportunity clause; and if so, whether it has filed with the Joint Reporting Committee, the Director, an agency, or the former President's Committee on Equal Employment Opportunity all reports due under the applicable filing requirements. In any case in which a bidder or prospective prime contractor or proposed subcontractor which participated in a previous contract subject to Executive Order 10925, 11114. or 11246 has not filed a report due under the applicable filing documents, no contract or subcontract shall be awarded unless such contractor submits a report covering the delinquent period or such other period specified by the FAA or the Director, OFCCP.

Contractor has __ has not __ participated in a previous contract subject to the equal opportunity clause prescribed by Executive Order 10925, or Executive Order 11114, or Executive Order 11246.

Contractor has __ has not __ submitted all compliance reports in connection with any such contract due under the applicable filing requirements; and that representations indicating submission of required compliance reports signed by proposed subcontractors will be obtained prior to award of subcontracts.

If Contractor has participated in a previous contract subject to the equal opportunity clause and has not submitted compliance reports due under applicable filing requirements, Contractor (Proposer) shall submit a compliance report on Standard Form 100, "Employee Information Report EEO-1" prior to the award of the Contract.

Standard Form 100 is normally furnished to contractors annually, based on a mailing list currently maintained by the Joint Reporting Committee. In the event Contractor has not received the form, Contractor may obtain it by writing to the following address:

Joint Reporting Committee
1800 G Street
Washington, DC 20506

_____
(Printed or typed Name of Signatory)

_____ _____
Signature Date

_____
Title

_____
Contractor's Firm Name

NOTE: The penalty for making false statements in offers is prescribed in 18 U.S.C. 1001.

END OF DOCUMENT

Document 470
(POP-1A)

Pay or Play Program
Acknowledgement Form

What this form does: This form acknowledges your awareness of the Pay or Play program. Your signature affirms that you will comply with the requirements of the program if you are the successful bidder/proposer, and ensure the same on behalf of subcontracts subject to the Pay or Play program.

For more information, contact the Project Manager.

Routing: Return this form with your bid or proposal.

I declare under penalty of perjury under the laws of the State of Texas that if awarded a contract, I will comply with the requirements of the Pay or Play Program.

Signature	Date
Print Name	City Vendor ID
Company Name	Phone Number
Email Address	

Document 00495

POST-BID PROCEDURES

1. DOCUMENT ADDRESSES

   A. Notice of Intent to Award

   B. Monitoring Authority

   C. Requirements of Bidder

   D. Failure of Bidder to comply with requirements

   E. Notice to Proceed

2. NOTICE OF INTENT TO AWARD

   A. The City will provide written Notice of Intent to Award to Low Bidder.

3. DEFINITIONS

   A. The "Monitoring Authority" for this Project is:

   Director, Office of Business Opportunity Division
   City of Houston
   611 Walker Street, 7th Floor
   Houston, Texas 77002

4. REQUIREMENTS OF BIDDER

   A. Within10 days of receipt of Notice of Intent to Award, Low Bidder shall execute and deliver to Isaac Muniz, Project Manager and Monitoring Authority, for the City's approval, documents indicated by an "X" below:
   [X] Document 00600 - List of Proposed Subcontractors and Suppliers, Part A – MWBE/PDBE/DBE/SBE Participation Plan
   [X] Executed Subcontract(s), Letter(s) of Intent, or documentation of good faith efforts to meet the MWBE/PDBE/DBE/SBE goals

   B. Within 10 days of receipt of Notice of Intent to Award, Low Bidder shall execute and deliver to Isaac Muniz, Project Manager for the City's approval, documents indicated by an "X" below:
   [X] Document 00501 - Resolution of Contractor
   [X] Document 00520 - Agreement

[X] Document 00600 - List of Proposed Subcontractors and Suppliers, Part B - Schedule of Non-MWBE/PDBE/DBE/SBE Subcontractors and Suppliers
[X] Document 00601 - Drug Policy Compliance Agreement
[X] Document 00602 - Contractor's Drug-free Workplace Policy *(Contractor creates this document.)*
[X] Document 00604 - History of OSHA Actions and List of On-the-job Injuries
[X] Document 00605 - List of Safety Impact Positions *(Contractor completes this list. Do not submit if submitting Document 00606.)*
[ ] Document 00606 - Contractor's Certification of No Safety Impact Positions *(Do not submit if submitting Document 00605.)*
[ ] Document 00607 - Certification Regarding Debarment, Suspension, and Other Responsibility Matters
[ ] Document 00608 - Contractor's Certification Regarding Non-segregated Facilities for Project Funded by AIP Grant
[X] Document 00610 - Performance Bond
[X] Document 00611 - Statutory Payment Bond
[X] Document 00612 - One-year Maintenance Bond
[ ] Document 00613 - One-year Surface Correction Bond
[X] Document 00620 - Affidavit of Insurance *(with Certificate of Insurance attached)*
[X] Document 00622 - Name and Qualifications of Proposed Superintendent *(Contractor creates this document.)*
[ ] Document 00623 - Contractor's Act of Assurance (SRF Form ED-103)
[X] Document 00624 - Affidavit of Compliance with Affirmative Action Program
[ ] Document 00626 - SRF Affirmative Steps Solicitation Report
[ ] Document 00627 - SRF Prime Contractor Affirmative Steps Certification and Goals
[ ] Document 00629 - Affidavit for FAA Form 7460-1
[X] Document 00630 - Certification of Agreement to Comply with Pay or Play Program
[X] Document 00631 - City of Houston Pay or Play Program – List of Participating Subcontractors
[ ] Document 00809 – CDBG Requirements for Federally Funded Projects

C. Within 10 days of receipt of Notice of Intent to Award, Low Bidder shall execute the following forms and deliver them directly to the Monitoring Authority.

1. Original forms contained in Document 00805 - Affirmative Action Compliance Program:
   [X] Pages 00805-5 to 00805-7, Certification by Bidder Regarding Equal Employment Opportunity
   [X] Page 00805-8, Total Work Force Composition of the Company, or copy of latest EEO-1 form *(required only if Contractor has a work*

force of 50 or more people and the Original Contract Price is $50,000 or more)

[X] Page 00805-9, Affirmative Action Compliance Program

[X] Page 00805-10, Certificate from Contractor Appointing Officer or Employee to Supervise Payment of Employees

[X] Page 00805-12, The Name of the Company's EEO Officer

2. Original completed form Document 00633 - Certification by Proposed Material Suppliers, Lessors, and Professional Service Providers Regarding Equal Employment Opportunity, for each proposed material supplier and equipment supplier.

D. Designations of Subcontractors and Suppliers, who have been selected by Bidder in Part B - Schedule of Non-MWBE/PDBE/DBE/SBE Subcontractors and Suppliers of Document 00600 - List of Proposed Subcontractors and Suppliers, and accepted by the City, may be changed only with prior notice and acceptance by Project Manager as provided in Conditions of the Contract. For each Product Supplier subsequently added or substituted, provide an original completed form, Document 00633 - Certification by Proposed Material Suppliers, Lessors, and Professional Service Providers Regarding Equal Employment Opportunity, directly to the Monitoring Authority.

E. On Bidder's written request, Isaac Muniz, Project Manager may grant an extension of time, not to exceed 5 days, to furnish documents specified in Paragraphs 4.0.A and 4.0.B. If Bidder is required to resubmit documents specified in Paragraph 4.0.A or 4.0.B, Bidder shall do so within time limits provided in the request for resubmission.

F. Designations of Subcontractors and Suppliers, who have been selected by Bidder in its Participation Plan, and accepted by the City, may be changed only with prior notice and acceptance by the Monitoring Authority as provided in Document 00808 - Minority and Women-owned Business Enterprise (MWBE), Persons with Disabilities Business Enterprise (PDBE) and Small Business Enterprise (SBE) Program.

5. FAILURE OF BIDDER TO COMPLY WITH REQUIREMENTS

A. Should Bidder, on receipt of Notice of Intent to Award, fail to comply with requirements of this Document 00495 within stated time, the City may declare award in default and require forfeiture of the Security Deposit.

B. After the City's written notice of default to Low Bidder, the City may award the Contract to Bidder whose offer is the next lowest bid, and Security Deposit of Bidder in default shall be forfeited to the City in accordance with provisions of Document 00200 - Instructions to Bidders.

6. NOTICE TO PROCEED

A. Upon the City's execution of the Agreement and delivery to Contractor, City Engineer will give Document 00551 - Notice to Proceed to Contractor, which establishes Date of Commencement of the Work.

END OF DOCUMENT

Document 00501

RESOLUTION OF CONTRACTOR

_____ ("Contractor"),
(Name of Contractor, e.g., "Biz. Inc.", "Biz LLP")

is a _____,
(Type of Organization, e.g.: Corporation, Limited Partnership, Limited Liability Partnership, Limited Liability Company, etc.)

which is bound by acts of _____,
(Name and Form of Governing Entity, e.g., "Biz Inc. Board of Directors", "Bill Smith, GP", etc.)

("Governing Entity").

On the _____ day of _____, 20_____, the Governing Entity resolved, in accordance with all documents, rules, and laws applicable to the Contractor, that _____, is authorized to act as the
(Contractor's Representative)

Contractor's Representative in all business transactions (initial one) ____ conducted in the State of Texas OR ____ related to this Contract; and

The Governing Entity warrants that the above resolution (a) was entered into without dissent or reservation by the Governing Entity, (b) has not been rescinded or amended, and (c) is now in full force and effect; and

In authentication of the adoption of this resolution, I subscribe my name on this ____ day of _____, 20___.

_____ _____
(Authorized Signature for Governing Entity) (Print or Type Name and Title of Authorized Signatory)

SWORN AND SUBSCRIBED before me on _____
Date

_____
Notary Public in and for the State of Texas

My Commission Expires: _____ _____
Expiration Date Print or Type Name of Notary Public

Document 00520

AGREEMENT

Project: Whiteheather Drainage and Paving Sub-Project IV

Project Location: The project area is generally bounded by Wuthering Heights Drive to the north, W. Orem to the south, Landmark Drive to the east and HCFCD Unit # C146-00-00 to the west. (Key Map No. 572J)

Project No: WBS No. M-000262-0004-4

The City: THE CITY OF HOUSTON, 900 Bagby Street, Houston, Texas 77002 (the "City")

and

Contractor: _____

(Address for Written Notice) _____

_____

Fax Number: _____

City Engineer, with respect to Sections 4.3 thru 4.5 of the General Conditions, is:

Carl Smitha, P.E. (or his successor)

P. O. Box 1562, Houston, Texas 77251-1562 (Address for Written Notice)

City Engineer, with respect to all other terms of the General Conditions, is:

J. Timothy Lincoln, P.E. (or his successor)

Fax Number: (832) 395-2410

THE CITY AND CONTRACTOR AGREE AS FOLLOWS:

ARTICLE 1
THE WORK OF THE CONTRACT

1.1 Contractor shall perform the Work in accordance with the Contract.

ARTICLE 2
CONTRACT TIME

2.1 Contractor shall achieve Date of Substantial Completion within 365 days after Date of Commencement of the Work, subject to adjustments of Contract Time as provided in the Contract.

2.2 The Parties recognize that time is of the essence for this Agreement and that the City will suffer financial loss if the Work is not completed within the Contract Time. Parties also recognize delays, expense, and difficulties involved in proving in a legal or arbitration proceeding actual loss suffered by the City if the Work is not completed on time. Accordingly, instead of requiring any such proof, the Parties agree that as liquidated damages for delay (but not as a penalty), Contractor shall pay the City the amount stipulated in Document 00800 – Supplementary Conditions, for each day beyond Contract Time.

ARTICLE 3
CONTRACT PRICE

3.1 Subject to terms of the Contract, the City will pay Contractor in current funds for Contractor's performance of the Contract, Contract Price of ____$_____ which includes Alternates, if any, accepted below.

3.2 The City accepts Alternates as follows:

****
Delete or add lines below to indicate all Alternates that were included in Request for competative sealed proposals. Remove brackets and instructions when done. Change color of remaining text to black.
****

Alternate No. 1 _____ *[Accepted or Not Accepted]* _____
Alternate No. 2 _____ *[Accepted or Not Accepted]* _____
Alternate No. 3 _____ *[Accepted or Not Accepted]* _____
Alternate No. 4 _____ *[Accepted or Not Accepted]* _____

ARTICLE 4
PAYMENTS

4.1 The City will make progress payments to Contractor as provided below and in Conditions of the Contract.

4.2 The Period covered by each progress payment is one calendar month ending on the [___] 10th, [___] 20th, or [___] last day of the month.

4.3 The City will issue Certificates for Payment and will make progress payments on the basis of such Certificates as provided in Conditions of the Contract.

4.4 Final payment, constituting entire unpaid balance of Contract Price, will be made by the City to Contractor as provided in Conditions of the Contract.

ARTICLE 5
CONTRACTOR REPRESENTATIONS

5.1 Contractor represents:

5.1.1 Contractor has examined and carefully studied Contract documents and other related data identified in Request For Competitive Sealed Proposals.

5.1.2 Contractor has visited the site and become familiar with and is satisfied as to general, local, and site conditions that may affect cost, progress, and performance of the Work.

5.1.3 Contractor is familiar with and is satisfied as to all federal, state, and local laws and regulations that may affect cost, progress, and performance of the Work.

5.1.4 Contractor has carefully studied all: (1) reports of explorations and tests of subsurface conditions at or contiguous to the site and all drawings of physical conditions in or relating to existing surface or subsurface structures at or contiguous to the site (except Underground Facilities) which have been identified in Contract documents and (2) reports and drawings of a hazardous environmental condition, if any, at the site which has been identified in Contract documents.

5.1.5 Contractor has obtained and carefully studied (or assumes responsibility for having done so) all additional or supplementary examinations, investigations, explorations, tests, studies, and data concerning conditions (surface, subsurface, and Underground Facilities) at or contiguous to the site which may affect cost, progress, or performance of the Work or which relate to any aspect of the means, methods, techniques, sequences, and procedures of construction to be employed by Contractor, including applying specific means, methods, techniques, sequences, and procedures of construction, if any, expressly required by the Contract to be employed by Contractor, and safety precautions and programs incident thereto

5.1.6 Contractor does not consider that any further examinations, investigations, explorations, tests, studies, or data are necessary for performance of the Work at Contract Price, within Contract Time, and in accordance with the Contract.

5.1.7 Contractor is aware of general nature of work to be performed by the City and others at the site that relates to the Work as indicated in Contract documents.

5.1.8 Contractor has correlated information known to Contractor, information and observations obtained from visits to the site, reports and drawings identified in the Contract, and all additional examinations, investigations, explorations, tests, studies, and data with the Contract.

5.1.9 Contractor has given City Engineer written notice of all conflicts, errors, ambiguities, or discrepancies that Contractor has discovered in the Contract, and written resolution thereof by City Engineer is acceptable to Contractor.

5.1.10 Contract documents are generally sufficient to indicate and convey understanding of all terms and conditions for performance and furnishing of the Work.

ARTICLE 6
MISCELLANEOUS PROVISIONS

6.1 The Contract may be terminated by either Party as provided in Conditions of the Contract.

6.2 The Work may be suspended by the City as provided in Conditions of the Contract.

ARTICLE 7
ENUMERATION OF CONTRACT DOCUMENTS

7.1 The following documents are incorporated into this Agreement:

7.1.1 Document 00700 - General Conditions.

7.1.2 Document 00800 - Supplementary Conditions.

7.1.3 General Requirements.

7.1.4 Divisions 02 through 16 of Specifications.

7.1.5 Drawings listed in Document 00015 - List of Drawings. Drawing No. and bound separately.

7.1.6 Addenda [and Riders] which apply to the Contract, are as follows:

Addendum No. 1, dated _____

Addendum No. 2, dated None

Addendum No. 3, dated None

Rider No. [___], dated None

7.1.7 Other documents:

	Document No.	Title
[X]	00410B	Proposal Form – Part B
[X]	00501	Resolution of Contractor (if a corporation)
[ ]	00608	Contractor's Certification Regarding Non-Segregated Facilities for Project Funded by AIP Grant
[X]	00610	Performance Bond
[X]	00611	Statutory Payment Bond
[X]	00612	One-year Maintenance Bond
[ ]	00613	One-year Surface Correction Bond
[X]	00620	Affidavit of Insurance (with the Certificate of Insurance attached)
[ ]	00623	Contractor's Act of Assurance (SRF Form ED-103)
[X]	00624	Affidavit of Compliance with Affirmative Action Program
[ ]	00628	Affidavit of Compliance with Disadvantaged Business Enterprise (DBE) Program for Project Funded By AIP Grant
[X]	00630	Agreement to Comply with Pay or Play (POP) Program
[X]	00631	Pay or Play (POP) Program List of Subcontractors
[ ]	00801	Supplementary Conditions for Project AIP Funded
[ ]	00802	SRF Supplementary Conditions
[ ]	00803	Work Order Supplementary Conditions
[X]	00805	Affirmative Action Compliance Program (DELETE If AIP Funded)
[ ]	00806	Disadvantaged Business Enterprise (DBE) Program
[ ]	00807	Bidder/Contractor Requirements for DBE Program
[X]	00808	Minority and Women-owned Business Enterprise (MWBE) & Persons with Disabilities Business Enterprise (PDBE) Program
[ ]	00810	Federal Wage Rate - Highway
[ ]	00811	Federal Wage Rate - Building
[ ]	00812	Federal Wage Rate - Heavy
[X]	00820	Wage Rate for Engineering Construction
[ ]	00821	Wage Rate for Building Construction
[X]	00830	Trench Safety Geotechnical Information
[X]	00840	Pay or Play Program
[ ]	00912	Rider

ARTICLE 8
SIGNATURES

8.1 This Agreement is executed in two original copies and is effective as of the date of countersignature by City Controller.

CONTRACTOR:

By: _____

Name: _____

Title: _____

Date: _____

Tax Identification Number: _____

(If Joint Venture)

By: _____

Name: _____

Title: _____

Date: _____

Tax Identification Number: _____

CITY OF HOUSTON, TEXAS

APPROVED:

By: _____
Director,
Department of Public Works and Engineering

SIGNED:

By: _____
Mayor

COUNTERSIGNED:

By: _____
City Controller

Date Countersigned:

_____

_____

ATTEST/SEAL:

By: _____
City Secretary

8.2 This Contract and Ordinance have been reviewed as to form by the undersigned legal assistant and have been found to meet established Legal Department criteria. Legal Department has not reviewed the content of these documents.

_____
Legal Assistant

_____
Date

END OF DOCUMENT

Document 00600

LIST OF PROPOSED SUBCONTRACTORS AND SUPPLIERS - PART A[1]
MWBE/PDBE/DBE/SBE PARTICIPATION PLAN

PROJECT NAME: *Whiteheather Sub-Project IV*
ORIG. CONTRACT PRICE: $_____
PROJECT NO.: M-000262-0004-4
DATE OF REPORT: _____

PART. AMOUNT: $_____
PERCENTAGE: _____%
PERCENTAGE MBE: _____%
PERCENTAGE WBE: _____%
PERCENTAGE PDBE: _____%
PERCENTAGE DBE: _____%
PERCENTAGE SBE: _____%

SUBCONTRACTOR OR SUPPLIER[2] (INLCUDE MBE/WBE/PDBE/DBE/SBE DESIGNATION)	ADDRESS	SCOPE OF WORK[3]	AGREED PRICE

NOTES:
1. RETURN PART A FOR PROJECTS WITH A STATED MWBE, PDBE, DBE AND/OR SBE PERCENTAGE GOAL, AS REQUIRED IN DOCUMENT 00800 – SUPPLEMENTARY CONDITIONS. RETURN PART A WITHIN THE SPECIFIED NUMBER OF DAYS AFTER RECEIPT OF NOTICE OF INTENT TO AWARD
2. FIRMS LISTED IN PART A SHALL BE CERTIFIED BY THE CITY AFFIRMATIVE ACTION/ CONTRACT COMPLIANCE DIVISION.
3. DESCRIBE THE WORK TO BE PERFORMED, FOR WHICH THE FIRM IS CERTIFIED, SUCH AS PAVING, ELECTRICAL, ETC.

CONTRACTOR SHALL EXECUTE CONTRACTS WITH APPROVED SUBCONTRACTORS AND SUPPLIERS WITHIN 30 DAYS AFTER THE DATE OF THE NOTICE TO PROCEED.

SIGNATURE: _____ COMPANY NAME: _____

NAME: _____ TITLE: _____
(Type or Print)

END OF DOCUMENT

Document 00601

DRUG POLICY COMPLIANCE AGREEMENT

I, _____ _____,
Name Title

of _____
Contractor

have authority to bind Contractor with respect to its Bid, Proposal, or performance of any and all contracts it may enter into with the City of Houston; and that by making this Agreement, I affirm that Contractor is aware of and by the time the Contract is awarded will be bound by and agree to designate appropriate safety impact positions for company employee positions, and to comply with the following requirements before the City issues a Notice to Proceed:

1. Develop and implement a written Drug Free Workplace Policy and related drug testing procedures for Contractor that meet the criteria and requirements established by the Mayor's Amended Policy on Drug Detection and Deterrence (Mayor's Drug Policy) and the Mayor's Drug Detection and Deterrence Procedures for Contractors (Executive Order No. 1-31).

2. Obtain a facility to collect urine samples consistent with Health and Human Services (HHS) guidelines and an HHS-certified drug-testing laboratory to perform drug tests.

3. Monitor and keep records of drug tests given and results; and upon request from the City of Houston, provide confirmation of such testing and results.

4. Submit semi-annual Drug Policy Compliance Declarations.

I affirm on behalf of Contractor that full compliance with the Mayor's Drug Policy and Executive Order No. 1-31 is a material condition of the Contract with the City of Houston,

I further acknowledge that falsification, failure to comply with or failure to timely submit declarations or documentation in compliance with the Mayor's Drug Policy or Executive Order No. 1-31 will be considered a breach of the Contract with the City and may result in non-award or termination of the Contract by the City.

_____ _____
Contractor Title

_____ _____
Signature Date

END OF DOCUMENT

Document 00603

CHECKLIST FOR DRUG POLICY SUBMITTAL

TO: **CARLOS MARTINEZ**
PWE/DIRECTOR'S OFFICE
SECURITY MANAGEMENT SECTION
611 WALKER STREET
3RD FLOOR ANNEX
HOUSTON, TEXAS 77002

FROM: **ASSISTANT DIRECTOR**
[*CONTRACTING DIVISION*]
[*CONTRACTING DEPARTMENT*]

DATE: [*Today's Date*]

CONTRACTOR: [*Low Bidder Name*]

PROJECT NAME: Whiteheather Drainage and Paving Sub-Project IV

PROJECT No.: WBS No. M-000262-0004-4

PROJECT MANAGER: Isaac Muniz **TELEPHONE:** (832) 395-2339 **FAX:** (832) 395-2342

DOCUMENTS CHECKED BELOW ARE BEING SUBMITTED: (Project Manager, check.)

- ☐ **DOC. 00601 - DRUG POLICY COMPLIANCE AGREEMENT (Standard Form)**
- ☐ **DOC. 00602 - CONTRACTOR'S DRUG-FREE WORKPLACE POLICY (Contractor creates this Document)**
- ☐ **DOC. 00605 - LIST OF SAFETY IMPACT POSITIONS (Contractor creates this List)**
  "OR"
- ☐ **DOC. 00606 - CONTRACTOR'S CERTIFICATION OF NO SAFETY IMPACT POSITIONS**

CCODT REVIEW: THE FOLLOWING CHECKED ITEM(S) ARE MISSING FROM SUBMISSION/POLICY AND NEED TO BE CORRECTED PRIOR TO AWARD:

- ☐ **NAME OF DRUG TESTING LAB**
  REASON FOR TESTING:
  - ☐ **RANDOM TESTING - 25% ANNUALLY**
  - ☐ **REASONABLE SUSPICION**
  - ☐ **POST ACCIDENT**
- ☐ **SAFETY IMPACT POSITIONS INCOMPLETE**
- ☐ **EMPLOYEE ACKNOWLEDGMENT FORM**
- ☐ **DRUG TESTING PROCEDURES**
- ☐ **CONSEQUENCE OF POSITIVE TEST:** *PERMANENTLY REMOVED FROM ANY CONTRACT CITY WORKSITE.*
- ☐ **CONSEQUENCE OF REFUSAL TO CONSENT:** *PERMANENTLY REMOVED FROM ANY CONTRACT CITY WORKSITE.*
- ☐ **OTHER:** _____

REJECTED	_____
	_____
	_____
APPROVED	_____

COMMENTS: _____

DATE RECEIVED: _____ **RESUBMITTAL DATE:** _____

END OF DOCUMENT

Document 00604

HISTORY OF OSHA ACTIONS AND LIST OF ON-THE-JOB INJURIES

Prior to award of the Contract, Low Bidder will be required to file the following with the City:

1. A history of all OSHA actions, advisories, etc., Contractor has received on all jobs worked in any capacity, prime or subcontractor. The history shall be for the two-year period preceding the Bid Date of the Project.

2. A list of all on-the-job injuries, accidents, and fatalities suffered by any present or former employees of Contractor during the same two-year period.

3. If less than the two-year period, give the date Contractor started doing business.

This information must be submitted to the City within the time period stated in Document 00498 - Notice of Intent to Award. An officer of the company must certify in a notarized statement that the information submitted is true and correct.

END OF DOCUMENT

Document 00605

LIST OF SAFETY IMPACT POSITIONS

****

Contractor is to provide a complete List of Employee Classifications that are considered in a "Safety Impact Position" and the number of employees in each of those classifications.

****

Employee Classification	Number of Employees

END OF DOCUMENT

Document 00606

CONTRACTOR'S CERTIFICATION OF
NO SAFETY IMPACT POSITIONS IN PERFORMANCE OF A CITY CONTRACT

BEFORE ME, the undersigned authority, on this day personally appeared

_____,
Affiant

who being by me duly sworn on his oath stated that he is _____
Title

of _____
Contractor

and that no employee safety impact positions, as defined in §5.17 of Executive Order No. 1-31, will be involved in performing _____.
Project

Contractor agrees and covenants that it shall immediately notify the City of Houston Director of Personnel if any safety impact positions are established to provide services in performing this City Contract.

_____
Affiant's Signature

SWORN AND SUBSCRIBED before me on this day of _____, 20___.

_____
Notary Public in and for the State of TEXAS

_____
Print or Type Notary Public Name

My Commission Expires: _____
Expiration Date

END OF DOCUMENT

Document 00607

CERTIFICATION REGARDING DEBARMENT,
SUSPENSION, AND OTHER RESPONSIBILITY MATTERS

Contractor certifies to the best of its knowledge and belief that it and its principals:

1. Are not presently debarred, suspended, proposed for debarment, declared ineligible, or voluntarily excluded from covered transactions by any Federal, State, or local department or agency;

2. Have not within a three-year period preceding this proposal been convicted of or had a civil judgment rendered against them for commission of fraud or a criminal offense in connection with obtaining, attempting to obtain, or performing a public (Federal, State, or local) transaction or contract under a public transaction: violation of Federal or State antitrust statutes or commission of embezzlement, theft, forgery, bribery, falsification or destruction of records, making false statements, or receiving stolen property;

3. Are not presently indicted for or otherwise criminally or civilly charged by a government entity (Federal, State, or local) with commission of any of the offenses enumerated in paragraph 2 of this certification; and

4. Have not within a three-year period preceding this application/proposal had one or more public transactions (Federal, State, or local) terminated for cause or default.

I understand that a false statement on this certification may be grounds for rejection of this proposal or termination of the award. In addition, under 18 USC Section 1001, a false statement may result in a fine of up to $10,000 or imprisonment for up to five years, or both.

Company:

_____
Typed Name & Title of Authorized Representative

_____ _____
Signature of Authorized Representative Date

☐ I am unable to certify the above statements. My explanation is attached.

END OF DOCUMENT

Document 00610

PERFORMANCE BOND

THAT WE, _____, as Principal, (the "Contractor"), and the other subscriber hereto, _____, as Surety, do hereby acknowledge ourselves to be held and firmly bound to the City of Houston (the "City"), a municipal corporation, in the penal sum of $_____ for the payment of which sum, well and truly to be made to the City, its successors and assigns, Contractor and Surety do bind themselves, their heirs, executors, administrators, successors and assigns, jointly and severally.

THE CONDITIONS OF THIS OBLIGATION ARE SUCH THAT:

WHEREAS, the Contractor has on or about this day executed a Contract in writing with the City for _____
_____,
all of such work to be done as set out in full in said Contract documents therein referred to and adopted by the City Council, all of which are made a part of this instrument as fully and completely as if set out in full herein.

NOW THEREFORE, if the said Contractor shall faithfully and strictly perform the Contract in all its terms, provisions, and stipulations in accordance with its true meaning and effect, and in accordance with the Contract documents referred to therein and shall comply strictly with each and every provision of the Contract and with this Bond, then this obligation shall become null and void and shall have no further force and effect; otherwise the same is to remain in full force and effect. Should the Contractor fail to faithfully and strictly perform the Contract in all its terms, including but not limited to the indemnifications thereunder, the Surety shall be liable for all damages, losses, expenses and liabilities that the City may suffer in consequence thereof, as more fully set forth herein.

It is further understood and agreed that the Surety does hereby relieve the City or its representatives from the exercise of any diligence whatever in securing compliance on the part of the Contractor with the terms of the Contract, and the Surety agrees that it shall be bound to take notice of and shall be held to have knowledge of all acts or omissions of the Contractor in all matters pertaining to the Contract. The Surety understands and agrees that the provision in the Contract that the City will retain certain amounts due the Contractor until the expiration of 30 days from the acceptance of the Work is intended for the City's benefit, and the City will have the right to pay or withhold such retained amounts or any other amount owing under the Contract without changing or affecting the liability of the Surety hereon in any degree.

It is further expressly agreed by Surety that the City or its representatives are at liberty at any time, without notice to the Surety, to make any change in the Contract documents and in the Work to be done thereunder, as provided in the Contract, and in the terms and conditions thereof, or to make any change in, addition to, or deduction from the Work to be done thereunder; and that such changes, if made, shall not in any way vitiate the obligation in this Bond and undertaking or release the Surety therefrom.

It is further expressly agreed and understood that the Contractor and Surety will fully indemnify and save harmless the City from any liability, loss, cost, expense, or damage arising out of Contractor's performance of the Contract.

If the City gives Surety notice of Contractor's default, Surety shall, within 45 days, take one of the following actions:

1. Arrange for Contractor, with consent of the City, to perform and complete the Contract; or

2. Take over and assume completion of the Contract itself, through its agents or through independent contractors, and become entitled to the payment of the balance of the Contract Price.

If the Surety fails to take either of the actions set out above, it shall be deemed to have waived its right to perform and complete the Contract and receive payment of the balance of the Contract Price and the City shall be entitled to enforce any remedies available at law, including but not limited to completing the Contract itself and recovering any cost in excess of the Original Contract Price from the Surety.

This Bond and all obligations created hereunder shall be performable in Harris County, Texas. This Bond is given in compliance with the provisions of Chapter 2253, Texas Government Code, as amended, which is incorporated herein by this reference.

Notices required or permitted hereunder shall be in writing and shall be deemed delivered when actually received or, if earlier, on the third day following deposit in a United States Postal Service post office or receptacle, with proper postage affixed (certified mail, return receipt requested), addressed to the respective other Party at the address prescribed in the Contract documents, or at such other address as the receiving party may hereafter prescribe by written notice to the sending party.

IN WITNESS THEREOF, the said Contractor and Surety have signed and sealed this instrument on the respective dates written below their signatures and have attached current Power of Attorney.

ATTEST, SEAL: (if a corporation)
WITNESS: (if not a corporation)

_____
Name of Contractor

By: _____
Name:
Title:

By: _____
Name:
Title:
Date:

ATTEST/SURETY WITNESS:

(SEAL)

_____
Full Name of Surety

_____
Address of Surety for Notice

_____

_____
Telephone Number of Surety

By: _____
Name:
Title:
Date:

By: _____
Name:
Title: Attorney-in-Fact
Date:

This Ordinance or Contract has been reviewed as to form by the undersigned legal assistant and have been found to meet established Legal Department criteria. The Legal Department has not reviewed the content of these documents.

_____
Legal Assistant

_____
Date

END OF DOCUMENT

Document 00611

STATUTORY PAYMENT BOND

THAT WE, _____, as Principal, hereinafter called Contractor and the other subscriber hereto, _____, as Surety, do hereby acknowledge ourselves to be held and firmly bound unto the City of Houston, a municipal corporation, in the sum of $_____ for the payment of which sum, well and truly to be made to the City of Houston, and its successors, the said Contractor and Surety do bind themselves, their heirs, executors, administrators, successors, jointly and severally.

THE CONDITIONS OF THIS OBLIGATION ARE SUCH THAT:

WHEREAS, the Contractor has on or about this day executed a contract in writing with the City of Houston for _____
_____,
all of such work to be done as set out in full in said Contract documents therein referred to and adopted by the City Council, all of which are made a part of this instrument as fully and completely as if set out in full herein;

NOW, THEREFORE, if the said Contractor shall pay all claimants supplying labor and materials to him or a Subcontractor in the prosecution of the Work provided for in the Contract, then, this obligation shall be void; otherwise the same is to remain in full force and effect;

PROVIDED HOWEVER, that this Bond is executed pursuant to the provisions of Chapter 2253, Texas Government Code, as amended, and all liabilities on this Bond shall be determined in accordance with the provisions of said Article to the same extent as if it were copied at length herein.

IN WITNESS THEREOF, the said Contractor and Surety have signed and sealed this instrument on the respective dates written below their signatures and have attached current Power of Attorney.

ATTEST, SEAL: (if a corporation)
WITNESS: (if not a corporation)

_____
Name of Contractor

By: _____
Name:
Title:

By: _____
Name:
Title:
Date:

ATTEST/SURETY WITNESS:

(SEAL)

_____
Full Name of Surety

_____
Address of Surety for Notice

_____

_____
Telephone Number of Surety

By: _____
Name:
Title:
Date:

By: _____
Name:
Title: Attorney-in-Fact
Date:

This Ordinance or Contract has been reviewed as to form by the undersigned legal assistant and have been found to meet established Legal Department criteria. The Legal Department has not reviewed the content of these documents.

_____
Legal Assistant

_____
Date

END OF DOCUMENT

Document 00612

ONE-YEAR MAINTENANCE BOND

THAT WE, _____, as Principal, hereinafter called Contractor, and the other subscriber hereto, _____, as Surety, do hereby acknowledge ourselves to be held and firmly bound to the City of Houston, a municipal corporation, in the sum of $_____, for the payment of which sum well and truly to be made to the City of Houston and its successors, the said Contractor and Surety do bind themselves, their heirs, executors, administrators, successors, jointly and severally.

THE CONDITIONS OF THIS OBLIGATION ARE SUCH THAT:

WHEREAS, the Contractor has on or about this day executed a Contract in writing with the City of Houston for _____
_____,
all of such work to be done as set out in full in said Contract documents therein referred to and adopted by the City Council, all of which are made a part of this instrument as fully and completely as if set out in full herein.

NOW THEREFORE, if the said Contractor shall comply with the provisions of Paragraph 11.5.1 of the General Conditions, and correct work not in accordance with the Contract documents discovered within the established one-year period, then this obligation shall become null and void, and shall be of no further force and effect; otherwise, the same is to remain in full force and effect.

Notices required or permitted hereunder shall be in writing and shall be deemed delivered when actually received or, if earlier, on the third day following deposit in a United States Postal Service post office or receptacle, with proper postage affixed (certified mail, return receipt requested), addressed to the respective other party at the address prescribed in the Contract documents, or at such other address as the receiving party may hereafter prescribe by written notice to the sending party.

IN WITNESS THEREOF, the said Contractor and Surety have signed and sealed this instrument on the respective dates written below their signatures and have attached current Power of Attorney.

ATTEST, SEAL: (if a corporation)
WITNESS: (if not a corporation)

_____
Name of Contractor

By: _____
Name:
Title:

By: _____
Name:
Title:
Date:

ATTEST/SURETY WITNESS:

(SEAL)

_____
Full Name of Surety

_____
Address of Surety for Notice

_____

_____
Telephone Number of Surety

By: _____
Name:
Title:
Date:

By: _____
Name:
Title: Attorney-in-Fact
Date:

This Ordinance or Contract has been reviewed as to form by the undersigned legal assistant and have been found to meet established Legal Department criteria. The Legal Department has not reviewed the content of these documents.

_____
Legal Assistant

_____
Date

END OF DOCUMENT

Document 00620

AFFIDAVIT OF INSURANCE

BEFORE ME, the undersigned authority, on this day personally appeared

_____, who
Affiant

being by me duly sworn on his oath stated that he is _____, of
Title

_____,
Contractor's Company Name

the Contractor named and referred to within the Contract documents; that he is fully competent and authorized to give this affidavit and that the attached original insurance certificate truly and accurately reflects the insurance coverage that is now available and will be available during the term of the Contract.

_____
Affiant's Signature

SWORN AND SUBSCRIBED before me on _____.
Date

_____
Notary Public in and for the State of TEXAS

_____
Print or type Notary Public name

My Commission Expires: _____
Expiration Date

END OF DOCUMENT

Document 00624

AFFIDAVIT OF COMPLIANCE WITH
AFFIRMATIVE ACTION PROGRAM

BEFORE ME, the undersigned authority, on this day personally appeared

_____, who
Affiant

being by me duly sworn on his oath stated that he is _____,
Title

of _____,
Contractor

the Contractor named and referred to within the Contract documents; that he is fully competent and authorized to give this affidavit and that the Contract is in compliance with the Affirmative Action Program of the City and has done all that is required by the Contract documents, the Affirmative Action Program, and pursuant to Chapter 15, Code of Ordinances, City of Houston, §15.16 et seq.

_____
Affiant's Signature

SWORN AND SUBSCRIBED before me on this day of _____, 20__.

_____
Notary Public in and for the State of TEXAS

_____
Print or Type Notary Public Name

My Commission Expires: _____
Expiration Date

END OF DOCUMENT

CITY OF HOUSTON
STANDARD DOCUMENT **AGREEMENT TO COMPLY WITH PAY OR PLAY**

Document 00630 (POP-2)

CERTIFICATION OF AGREEMENT TO COMPLY WITH PAY OR PLAY PROGRAM

Contractor Name: _____ $ _____
(Contractor/Subcontractor) (Amount of Contract)

Contractor Address: _____

Project No.: M-000262-0004-4

Project Name: Whiteheather Drainage and Paving Sub-Project IV

In accordance with the City of Houston Pay or Play Program authorized by Ordinance 2007-534, Contractor agrees to abide by the terms of this Program. This certification is required of all contractors for contracts subject to the program. You must agree EITHER to PAY or to PLAY for each covered employee, including those of subcontractors subject to the program.

[ ] Yes [ ] No Contractor agrees to Pay $1.00 per hour for work performed by covered employees under the contract with the City and to ensure compliance by covered subcontractors and contract labor to the terms of the Pay or Play Program.

[ ] Yes [ ] No Contractor agrees to offer health benefits to each covered employee and ensure compliance by the covered subcontractors. The offered health benefits must meet the following criteria:
(1) the employer will contribute no less than $150 per employee per month toward the total premium cost; and
(2) the employee contribution, if any amount, will be no greater than 50% of the total premium cost and no more than $150 per month .

[ ] Yes [ ] No Contractor agrees to pay on behalf of some covered employees and contract labor and play on behalf of other covered employees, in accordance with program requirements, including subcontractors' employees, if applicable. **(NOTE: IF YOU SELECT YES ON THIS OPTION PLEASE CHECK YES ON THE ABOVE TWO OPTIONS "AGREES TO PAY AND AGREES TO PROVIDE HEALTH BENEFITS")**

[ ] Yes [ ] No If contract labor is utilized the Contractor agrees to report hours worked by the contract laborer and Pay $1.00 per hour for work performed.

[ ] Yes [ ] No Contractor will comply with all provisions of the Pay or Play Program and will furnish all information and reports requested to determine compliance with program provisions.

[ ] Yes [ ] No For Prime Contractors Only: Contractor will file compliance reports with the City, which will include activity for subcontractors subject to the program, in the form and to the extent requested by the administering department or the Affirmative Action and Contract Compliance Office. Compliance reports shall contain information including, but not limited to, documentation showing employee health coverage and employee work records.

*Estimated Number of:	Prime Contractor	Sub-Contractor
Total Employees on City Job		
Covered Employees		
Non-Covered Employees		
Exempt Employees		

*Required

I hereby certify that the above information is true and correct.

_____ _____
CONTRACTOR (Signature) DATE

_____
NAME AND TITLE (Print or type)

PAY OR PLAY PROGRAM
LIST OF SUBCONTRACTORS

Document 00631
(POP-3)

LIST OF SUBCONTRACTORS

Reporting Period:

Prime Contractor:

Project Name:

WBS Number:

Contact Person:
Address:

Email:
Phone:

Note: Include all subcontractors. Subcontractors with subcontracts valued $200,000 or greater are required to pay or play.

			Check One						
Subcontractor Name	Supplier Y/N?	Amount of Subcontract	Pay	Play	N/A	Contact Person	Phone	Email Address	Mailing Address

Noe - Document 00630 must be submitted for each subcontractor required to participate in the POP Program.

Document 00633

CERTIFICATION BY PROPOSED MATERIAL SUPPLIERS,
LESSORS, AND PROFESSIONAL SERVICE PROVIDERS
REGARDING EQUAL EMPLOYMENT OPPORTUNITY

Company Name: _____ $_____
(Supplier, Lessor, Professional Service Provider) (Amount of Contract)

Company Address: _____

Company Telephone Number:_____ Fax:_____

E-mail Address: _____

Web Page/URL Address:_____

Company Tax Identification Number: _____

Project No.: _____

Project Name: _____

In accordance with the City of Houston Ordinance 78-1538, Supplier/Lessor/Professional Service Provider represents to be an equal opportunity employer and agrees to abide by the terms of the Ordinance. This certification is required of all Suppliers/Lessors/Professional Service Providers (herein Supplier) with contracts in the amount of $10,000.00 or more.

[ ] Yes [ ] No Supplier agrees not to discriminate against any employee or applicant for employment because of race, religion, color, sex, national origin, or age.

[ ] Yes [ ] No Supplier agrees that all qualified applicants will receive consideration for employment without regard to race, religion, color, sex, national origin, or age.

[ ] Yes [ ] No Supplier will comply with all provisions of Executive Order No. 11246 and rules, regulations and applicable orders of the Department of Labor or other Federal Agency responsible for enforcement of applicable equal opportunity and affirmative action provisions and will likewise furnish all information and reports required by the Mayor or Contract Compliance Officers for the purpose of investigation to ascertain and effect compliance with the City of Houston's Office of Affirmative Action and Contract Compliance.

[ ] Yes [ ] No The Supplier shall file and cause their sub-tier contractors to file compliance reports with the City in the form and to the extent as may be prescribed by the Mayor or Contract Compliance Officers. Compliance reports filed at such times as directed shall contain information including, but not limited to, the practices, policies, programs, and employment policies.

I hereby certify that the above information is true and correct.

_____ _____
COMPANY OFFICER (Signature) DATE

_____
NAME AND TITLE (Print or type)

END OF DOCUMENT

Document 00642

MONTHLY SUBCONTRACTOR PAYMENT REPORTING FORM

Legal Project Name:_____

Outline Agreement No.:_____ WBS No.:_____

Contractor's Company Name: _____

Address: _____

CERTIFICATION

_____, Contractor's Representative for the above referenced Contract, hereby certifies that (1) Contractor has paid all subcontractors, except those noted below, (2) Contractor made such payments (a) in proportion to the amount City paid Contractor and (b) in accordance and compliance with all applicable Contract Documents and laws; and (3) Contractor withheld no sums from any subcontractor for allegations of deficiency in Work. The term "subcontractor", as used herein, includes all persons or firms furnishing work, materials, services or equipment Contractor ordered incorporated into Work or placed near the Project for which the City made partial payment.

EXCEPTION: Contractor sent Payment Notifications to the following subcontractors explaining why Contractor withheld payment. Copies are attached.

Subcontractor Name:_____	Subcontractor Name: _____
Street Address: _____	Street Address: _____
City, State, and Zip Code: _____	City, State, and Zip Code: _____
Amount of Payment Withheld:_____	Amount of Payment Withheld: _____
Date Payment First Withheld: _____	Date Payment First Withheld: _____
Description of Good Faith Reason:_____	Description of Good Faith Reason:_____
_____	_____

_____
(Signature of Contractor's Representative)

_____
(Print or Type Name of Contractor's Representative)

SWORN TO AND SUBSCRIBED before me on:

_____
Date

_____
Notary Public in and for the State of Texas

My Commission Expires: _____
Expiration Date

_____
Print or Type Name of Notary Public

Document 00646

PAYMENT NOTIFICATION – EXPLANATION OF WITHHOLDING

Legal Project Name:_____

Outline Agreement No.:_____ WBS No.:_____

Contractor's Company Name: _____

Address: _____

Date: _____

SUBCONTRACTOR PAYMENT INFORMATION:

Subcontractor Name:_____

Street Address: _____

City, State, and Zip Code: _____

Business Phone Number: _____

Amount of Subcontractor Invoice: _____

Amount of Payment Made: _____

Amount of Payment Withheld:_____

Date Payment First Withheld: _____

DETAILED EXPLANATION OF WITHHOLDING: _____

_____

_____

_____

_____

_____ _____

(Signature of Contractor's Representative) (Print or Type Name of Contractor's Representative)

Document 00700

GENERAL CONDITIONS

November 1, 2011 EDITION

TABLE OF ARTICLES

1. GENERAL PROVISIONS
2. THE CITY
3. CONTRACTOR
4. ADMINISTRATION OF THE CONTRACT
5. SUBCONTRACTORS AND SUPPLIERS
6. CONSTRUCTION BY THE CITY OR BY SEPARATE CONTRACTORS
7. CHANGES IN THE WORK
8. TIME
9. PAYMENTS AND COMPLETION
10. SAFETY PRECAUTIONS
11. INSURANCE AND BONDS
12. UNCOVERING AND CORRECTION OF THE WORK
13. MISCELLANEOUS PROVISIONS
14. TERMINATION OR SUSPENSION OF THE CONTRACT

ARTICLE 1 - GENERAL PROVISIONS 3

1.1 DEFINITIONS 3
1.2 EXECUTION, CORRELATION, AND INTENT 5
1.3 OWNERSHIP AND USE OF DOCUMENTS 6
1.4 INTERPRETATION 6

ARTICLE 2 - THE CITY 6

2.1 LIMITATIONS OF THE CITY'S OFFICERS AND EMPLOYEES 6
2.2 DUTIES OF THE CITY 6
2.3 AVAILABILITY OF LAND AND USE OF SITE 6
2.4 THE CITY'S RIGHT TO STOP THE WORK 7
2.5 THE CITY'S RIGHT TO CARRY OUT WORK 7

ARTICLE 3 - CONTRACTOR 7

3.1 RESPONSIBILITIES 7
3.2 REVIEW OF CONTRACT AND FIELD CONDITIONS BY CONTRACTOR 7
3.3 SUPERVISION AND CONSTRUCTION PROCEDURES 7
3.4 SUPERINTENDENT 8
3.5 LABOR 8
3.6 PREVAILING WAGE RATES 9
3.7 LABOR CONDITIONS 9
3.8 DRUG DETECTION AND DETERRENCE 9
3.9 MATERIALS & EQUIPMENT 10
3.10 PRODUCT OPTIONS AND SUBSTITUTIONS 11
3.11 CASH ALLOWANCES 11
3.12 WARRANTY 11
3.13 TAXES 12
3.14 PERMITS, FEES, AND NOTICES 12
3.15 CONSTRUCTION SCHEDULES 12
3.16 DOCUMENTS AND SAMPLES AT THE SITE 12
3.17 MANUFACTURER'S SPECIFICATIONS 13
3.18 SHOP DRAWINGS, PRODUCT DATA, AND SAMPLES 13
3.19 CULTURAL RESOURCES AND ENDANGERED SPECIES 14
3.20 CUTTING AND PATCHING 14
3.21 CLEANING 14
3.22 SANITATION 14
3.23 ACCESS TO WORK AND TO INFORMATION 14
3.24 TRADE SECRETS 14
3.25 INDEMNIFICATION 15
3.26 RELEASE AND INDEMNIFICATION – PATENT, COPYRIGHT, TRADEMARK, AND TRADE SECRET INFRINGEMENT 15
3.27 INDEMNIFICATION PROCEDURES 16

ARTICLE 4 - ADMINISTRATION OF THE CONTRACT 16

4.1 CONTRACT ADMINISTRATION 16
4.2 COMMUNICATIONS IN ADMINISTRATION OF THE CONTRACT 17
4.3 CLAIMS AND DISPUTES 17
4.4 RESOLUTION OF CLAIMS AND DISPUTES 18

ARTICLE 5 - SUBCONTRACTORS AND SUPPLIERS 19

5.1 AWARD OF SUBCONTRACTS OTHER CONTRACTS FOR PORTIONS OF THE WORK 19
5.2 CONTRACTOR RESPONSIBILITY FOR SUBCONTRACTORS 19

ARTICLE 6 - CONSTRUCTION BY THE CITY OR BY SEPARATE CONTRACTORS 20

6.1 THE CITY'S RIGHT TO PERFORM CONSTRUCTION AND TO AWARD SEPARATE CONTRACTS 20
6.2 COORDINATION 20
6.3 MUTUAL RESPONSIBILITY 20
6.4 THE CITY'S RIGHT TO CLEAN UP 20

ARTICLE 7 - CHANGES IN THE WORK 20

7.1 CHANGES 20
7.2 WORK CHANGE DIRECTIVES 21
7.3 ADJUSTMENTS IN CONTRACT PRICE 21
7.4 MINOR CHANGES IN THE WORK 22

ARTICLE 8 - TIME 22

8.1 PROGRESS AND COMPLETION 22
8.2 DELAYS AND EXTENSIONS OF TIME 23

ARTICLE 9 - PAYMENTS AND COMPLETION 23

9.1 UNIT PRICE WORK 23
9.2 ESTIMATES FOR PAYMENT, UNIT PRICE WORK 24
9.3 STIPULATED PRICE WORK 24
9.4 APPLICATIONS FOR PAYMENT, STIPULATED PRICE WORK 24
9.5 CERTIFICATES FOR PAYMENT 24
9.6 COMPUTATIONS OF CERTIFICATES FOR PAYMENT 24
9.7 DECISIONS TO WITHHOLD CERTIFICATION 25
9.8 PROGRESS PAYMENTS 25
9.9 DATE OF SUBSTANTIAL COMPLETION 25
9.10 PARTIAL OCCUPANCY OR USE 26

9.11 FINAL COMPLETION AND FINAL PAYMENT 26
9.12 LIQUIDATED DAMAGES 27

ARTICLE 10 - SAFETY PRECAUTIONS 28

10.1 SAFETY PROGRAMS 28
10.2 POLLUTANTS AND POLLUTANT FACILITIES 28
10.3 SAFETY OF THE ENVIRONMENT, PERSONS, AND PROPERTY 28
10.4 EMERGENCIES 29

ARTICLE 11 - INSURANCE AND BONDS 29

11.1 GENERAL INSURANCE REQUIREMENTS 29
11.2 INSURANCE TO BE PROVIDED BY CONTRACTOR 29
11.2 INSURANCE TO BE PROVIDED BY CONTRACTOR 29
11.3 PROOF OF INSURANCE 32
11.4 PERFORMANCE AND PAYMENT BONDS 33
11.5 MAINTENANCE BONDS 33
11.6 SURETY 33
11.7 DELIVERY OF BONDS 34

ARTICLE 12 - UNCOVERING AND CORRECTION OF THE WORK 34

12.1 UNCOVERING OF THE WORK 34
12.2 CORRECTION OF THE WORK 34
12.3 ACCEPTANCE OF NONCONFORMING WORK 34

ARTICLE 13 - MISCELLANEOUS PROVISIONS 34

13.1 GOVERNING LAWS 34
13.2 SUCCESSORS 35
13.3 BUSINESS STRUCTURE AND ASSIGNMENTS 35
13.4 WRITTEN NOTICE 35
13.5 RIGHTS AND REMEDIES 35
13.6 TESTS AND INSPECTIONS 35
13.7 INTEREST 35
13.8 PARTIES IN INTEREST 36
13.9 ENTIRE CONTRACT 36
13.10 WRITTEN AMENDMENT 36
13.11 COMPLIANCE WITH LAWS 36
13.12 SEVERABILITY 36

ARTICLE 14 - TERMINATION OR SUSPENSION OF THE CONTRACT 36

14.1 TERMINATION BY THE CITY FOR CAUSE 36
14.2 TERMINATION BY THE CITY FOR CONVENIENCE 37
14.3 SUSPENSION BY THE CITY FOR CONVENIENCE 37
14.4 TERMINATION BY CONTRACTOR 38

ARTICLE 1 - GENERAL PROVISIONS

1.1 DEFINITIONS

1.1.1 Agreement: Document signed by the Parties and binding the Parties, containing the name of Contractor, title and location of the Project, Original Contract Time, Original Contract Price, enumeration of documents included in the Contract, and other provisions.

1.1.2 Bonds: Performance Bond, Payment Bond, Maintenance Bond, and other Surety instruments executed by Surety. When in singular form, refers to individual instrument.

1.1.3 Business Enterprise: Any business entity registered in a program authorized by 49 C.F.R. § 26 (where applicable) or City Code of Ordinances, Chapter 15, Article II, relating to Equal Opportunity Employment and taking affirmative action to ensure that applicants are employed and employees are treated without regard to race, religion, color, sex, national origin, or age. The term "Business Enterprise" may include any Disadvantaged Business Enterprise ("DBE"), Minority Business Enterprise ("MBE"), Woman Business Enterprise ("WBE"), Small Business Enterprise ("SBE"), Person with Disability Enterprise ("PDBE"), and any Historically Underutilized Business ("HUB").

1.1.4 Business Enterprise Policy: Contract documents and applicable policies relating to Business Enterprises and authorized under 49 C.F.R. § 26 or City Code of Ordinances, Chapter 15, Article II.

1.1.5 Cash Allowance: An estimated sum of money to be used only for a limited class of expenditures such as utility relocation costs, fees for special licenses or permits, or other "pass-through" costs that would be the same for any contractor. Cash Allowances may not be used to purchase goods or services that are not specified in the Contract. The unspecified items must be purchased according to the terms of Article 7.

1.1.6 Change Order: Written instrument prepared by the City and signed by City Engineer and Contractor, specifying the following:

.1 a change in the Work;
.2 a change in Contract Price, if any; and
.3 a change in Contract Time, if any.

The value of a Change Order is the net amount after offsetting all deductions against all additions effected by the Change Order.

1.1.7 City: The City of Houston, a home rule municipality located principally within Harris County, Texas, including its successors and its authorized representatives.

1.1.8 City Engineer: The City Engineer, or the City employee representing the City Engineer, designated in the Agreement and authorized to represent the City, or successors.

1.1.9 Claim: Written demand or written assertion by one Party seeking adjustment of the Contract, payment of money, extension of time, or other relief under the Contract and includes, but is not limited to, claims for materials, labor, equipment, delay, changes, adjustments, substitutions, fees and third party claims. The Party making the Claim has the responsibility to substantiate the Claim.

1.1.10 Conditions of the Contract: General Conditions and Supplementary Conditions.

1.1.11 Construction Manager: Person or firm under contract with the City as its authorized representative to oversee and administer construction of the Work, and who may perform the role of Project Manager and Inspector, as designated by City Engineer in writing.

1.1.12 Contract: The Agreement; documents enumerated in and incorporated into the Agreement; Modifications; and amendments.

1.1.13 Contract Price: The monetary amount stated in the Agreement adjusted by Change Order, and increases or decreases in Unit Price Quantities, if any.

1.1.14 Contract Time: The number of days stated in the Agreement to substantially complete the Work, plus days authorized by Change Order.

1.1.15 Contractor: Person or firm identified as such in the Agreement including its successors and its authorized representatives.

1.1.16 Date of Commencement of the Work: Date established in Notice to Proceed on which Contract Time will commence. This date will not be changed by failure of Contractor, or persons or entities for whom Contractor is responsible, to act.

1.1.17 Date of Substantial Completion: Date that construction, or portion thereof designated by City Engineer, is certified by City Engineer to be substantially complete.

1.1.18 Design Consultant: Person or firm, under contract with the City, to provide professional services during construction and its authorized representatives. If a Design Consultant is not employed for services during construction, Project Manager will perform duties of Design Consultant designated in the Contract in addition to usual duties of Project Manager.

1.1.19 Drawings: Graphic and pictorial portions of the Contract that define the character and scope of the Work.

1.1.20 Extra Unit Price: Unit Prices, which may be required for completion of the Work. These Unit Prices and Unit Price Quantities are in the Contract and are included in Original Contract Price.

1.1.21 Furnish: To supply, pay for, deliver to the site, and unload.

1.1.22 General Requirements: The sections of Division 01 Specifications that specify administrative and procedural requirements and temporary facilities required for the Work.

1.1.23 Inspector: City's employee or agent authorized to assist with inspection of the Work.

1.1.24 Install: Unpack, assemble, erect, place, anchor, apply, work to dimension, finish, cure, clean, protect, and similar operations.

1.1.25 Legal Holiday: Day established by the City Council as a holiday.

1.1.26 Major Unit Price Work: An individual Unit Price item,

.1 whose value is greater than five percent of Original Contract Price,

.2 whose value becomes greater than five percent of Original Contract Price as the result of an increase in quantity, or

.3 whose value is $100,000, whichever is least.

1.1.27 Mayor's Office of Business Opportunity: any reference to, or use of, the "Office of Affirmative Action" shall mean the Mayor's Office of Business Opportunity, or any such future name to which it is changed.

1.1.28 Minor Change in the Work: A written change in the Work, ordered by City Engineer, that does not change Contract Price or Contract Time, and that is consistent with the general scope of the Contract.

1.1.29 Modification: Change Order, Work Change Directive, or Minor Change in the Work.

1.1.30 Notice of Noncompliance: A written notice by City Engineer to Contractor regarding defective or nonconforming work that does not meet the Contract requirements, and that establishes a time by which Contractor shall correct the defective or nonconforming work.

1.1.31 Notice to Proceed: A written notice by City Engineer to Contractor establishing Date of Commencement of the Work.

1.1.32 Original Contract Price: The monetary amount originally stated in the Agreement.

1.1.33 Parties: Contractor and the City. When in singular form, refers to Contractor or the City.

1.1.34 Pollutant: Any materials subject to the Texas Solid Waste Disposal Act.

1.1.35 Pollutant Facility: Any facility regulated by the State of Texas to protect the health and environment from contamination by Pollutants, including without limitation, landfills, oil and gas production and storage facilities, wastewater facilities, waste injection wells, and storage tanks (including drums).

1.1.36 Product: Materials, equipment, or systems incorporated into the Work or to be incorporated into the Work.

1.1.37 Product Data: Illustrations, standard schedules, performance charts, instructions, brochures, diagrams, and other information furnished by Contractor to illustrate a Product.

1.1.38 Project: Total construction, of which the Work performed under the Contract may be the whole or a part, and which may include construction by the City or by separate contractors.

1.1.39 Project Manager: City Engineer's authorized representative for administration of the Work. Titles used within the City's departments may be different than those used in this definition.

1.1.40 Provide: Furnish and Install, complete, ready for intended use.

1.1.41 Samples: Physical examples that illustrate Products, or workmanship, and establish standards by which the Work is judged.

1.1.42 Shop Drawings: Drawings, diagrams, schedules, and other data specially prepared for the Work by Contractor, Subcontractor or Supplier, to illustrate a portion of the Work.

1.1.43 Specifications: Divisions 01 through 16 of the documents that are incorporated into the Agreement, consisting of written General Requirements and requirements for Products, standards, and workmanship for the Work, and performance of related services.

1.1.44 Stipulated Price: Single lump sum amount stated in the Contract for completion of the Work, or for designated portion of the Work.

1.1.45 Subcontractor: Person or firm that has direct or indirect contract with Contractor or with another Subcontractor to perform a portion of the Work and its authorized representatives.

1.1.46 Superintendent: Employee of Contractor having authority and responsibility to act for and represent Contractor.

1.1.47 Supplementary Conditions: Part of Conditions of the Contract that amends or supplements General Conditions.

1.1.48 Supplier: Manufacturer, distributor, materialman, or vendor having a direct agreement with Contractor or Subcontractor for Products, or services and its authorized representatives.

1.1.49 Surety: Corporate entity that is bound by one or more Bonds, and is responsible for completion of the Work, including the correction period, and for payment of debts incurred in fulfilling the Contract. Surety shall include co-surety or reinsurer, as applicable.

1.1.50 Underground Facilities: Pipes, conduits, ducts, cables, wires, manholes, vaults, tanks, tunnels, or other such facilities or attachments and encasements containing such facilities that exist below ground level.

1.1.51 Unit Price: An amount stated in the Contract for an individual, measurable item of work, which, when multiplied by actual quantity incorporated into the Work, amounts to full compensation for completion of the item, including work incidental to it.

1.1.52 Unit Price Quantities: Quantities indicated in the Contract that are approximations made by the City for contracting purposes.

1.1.53 Work: Entire construction required by the Contract, including all labor, Products, and services provided by Contractor to fulfill Contractor's obligations. The Work may constitute the whole or a portion of the Project.

1.1.54 Work Change Directive: A written change in the Work, ordered by City Engineer, that is within the general scope of the Contract and consisting of additions, deletions, or other revisions. A Work Change Directive will state proposed basis for adjustment, if any, in Contract Price or Contract Time, or both.

1.2 EXECUTION, CORRELATION, AND INTENT

1.2.1 Execution of the Contract by Contractor is conclusive that Contractor has visited the Work site, become familiar with local conditions under which the Work will be performed, and fully informed itself as to conditions and matters which can affect the Work or costs. Contractor further agrees that it has carefully correlated personal observations with requirements of the Contract.

1.2.2 The Contract and Modifications have been read and carefully considered by Contractor, who understands and agrees to their sufficiency for the Work. The Contract may not be more strongly construed against the City than against Contractor and Surety.

1.2.3 Contractor shall include all items necessary for proper execution and completion of the Work.

1.2.4 Reference to standard specifications, manuals, or codes of a technical society, organization, or association, or to laws or regulations of a governmental authority, whether specific or implied, mean the latest edition in effect as of date of receipt of bids, except as may be otherwise specifically stated in the Contract.

1.2.5 No provision of any referenced standard, specification, or manual changes the duties and responsibilities of the City, City Engineer, Contractor, or Design Consultant from those set forth in the Contract. Nor do these provisions assign to Design Consultant any duty or authority to supervise or direct performance of the Work or any duty or

authority to undertake any actions contrary to provisions of the Contract.

1.2.6 Organization of Specifications into divisions, sections, and articles and arrangement of Drawings does not control Contractor in dividing the Work among Subcontractors or in establishing the extent of work to be performed by any trade.

1.2.7 Unless otherwise defined in the Contract, words which have well-known construction industry technical meanings are used in the Contract in accordance with these recognized meanings.

1.3 OWNERSHIP AND USE OF DOCUMENTS

1.3.1 Drawings, Specifications, and other documents prepared by the City or by Design Consultant are instruments of service through which the Work to be executed by Contractor is described. Contractor may retain one Contract record set.

1.3.2 Neither Contractor, Subcontractor, nor Supplier will own or claim a copyright to documents contained in the Contract or any part of the Contract.

1.3.3 Documents contained in the Contract, prepared by the City or by Design Consultant, and copies furnished to Contractor, are for use solely with respect to the Work. They may not be used by Contractor, Subcontractor or Supplier on other projects or for additions to the Work, outside the scope of the Work, without the specific written consent of City Engineer, and Design Consultant, when applicable.

1.3.4 Contractor, Subcontractors, and Suppliers are granted a limited license to use and reproduce applicable portions of the Contract appropriate to and for use in execution of their work under the Contract.

1.4 *INTERPRETATION*

1.4.1 Specifications are written in an imperative streamlined form and are directed to Contractor, unless noted otherwise. When written in this form, words "shall be" are included by inference where a colon (:) is used within sentences or phrases.

1.4.2 In the interest of brevity, the Contract frequently omits modifying words such as "all" and "any" and articles such as "the" and "an", but an absent modifier or article is not intended to affect interpretation of a statement.

ARTICLE 2 - THE CITY

2.1 *LIMITATIONS OF THE CITY'S OFFICERS AND EMPLOYEES*

2.1.1 No officer or employee of the City may authorize Contractor to perform an act or work contrary to the Contract, except as otherwise provided in the Contract.

2.2 *DUTIES OF THE CITY*

2.2.1 If a building permit is required, the City will process an application for, and Contractor shall purchase the building permit before Date of Commencement of the Work.

2.2.2 The City will make available to Contractor a reproducible set of Drawings. Additional copies will be furnished, on Contractor's request, at the cost of reproduction.

2.2.3 When necessary for performance of the Work, the City will provide surveys describing physical characteristics, legal limitations, legal description of site, and horizontal and vertical control adequate to lay out the Work.

2.2.4 Information or services that the City is required to provide under the Contract will be provided by the City with reasonable promptness to avoid delay in orderly progress of the Work.

2.2.5 The Contract imposes no implied duty on the City. The City does not warrant any plans or specifications associated with the Contract.

2.2.6 Except as expressly stated in this Article, the City owes no duty to the Contractor or any subcontractor.

2.3 *AVAILABILITY OF LAND AND USE OF SITE*

2.3.1 The City will furnish, as indicated in the Contract, rights-of-way, land on which the Work is to be performed, and other land designated in the Contract for use by Contractor unless otherwise provided in the Contract.

2.3.2 Contractor shall confine operations at site to those areas permitted by law, ordinances, permits, and the Contract, and may not unreasonably encumber site with materials or equipment.

2.3.3 In addition to land provided by the City under Section 2.3, Contractor shall provide all land and access to land that may be required for use by Contractor for temporary construction facilities or for storage of materials and equipment, and shall indemnify the City during its use of the land as stated in Section 3.25.

2.4 *THE CITY'S RIGHT TO STOP THE WORK*

2.4.1 If Contractor fails to carry out the Work in accordance with the Contract, or fails to correct work which is not in accordance with requirements of the Contract as required in Sections 12.1 and 12.2, the City may, by Notice of Noncompliance, order Contractor to stop the Work or any portion of the Work until the cause for the order has been eliminated. However, the right of the City to stop the Work will not give rise to a Claim for delay or to a duty on the part of the City to exercise this right for the benefit of Contractor or any other person or entity, except to the extent required by Section 6.2. If Contractor corrects the defective or nonconforming work within the time established in Notice of Noncompliance, City Engineer will give written notice to Contractor to resume performance of the Work.

2.5 *THE CITY'S RIGHT TO CARRY OUT WORK*

2.5.1 If Contractor fails to carry out work in accordance with the Contract, and fails within the period established in a Notice of Noncompliance to correct the nonconforming work, the City may, after expiration of the required period, correct the deficiencies without prejudice to other remedies the City may have, including rights of the City under Section 14.1.

2.5.1.1 When the City corrects deficiencies, City Engineer will issue an appropriate Change Order and deduct from payments then or thereafter due Contractor the cost of correcting the deficiencies, including compensation for Design Consultant's and Construction Manager's additional services and expenses made necessary by such default, neglect, or failure. This action by the City and amounts charged to Contractor are both subject to prior approval of City Engineer. If payments, then or thereafter due Contractor, are not sufficient to cover these amounts, Contractor shall pay the difference to the City.

2.5.2 Notwithstanding the City's right to carry out work, maintenance and protection of the Work remains Contractor's responsibility, as provided in the Contract.

ARTICLE 3 - CONTRACTOR

3.1 *RESPONSIBILITIES*

3.1.1 Contractor shall maintain office with agent in the greater City of Houston area during the Contractor's performance under the Contract. Contractor shall file its street address with City Engineer.

3.1.2 Contractor and Contractor's employees shall not give or lend money or anything of value to an officer or employee of the City. Should this Paragraph 3.1.2 be violated, City Engineer may terminate the Contract under Section 14.1.

3.2 *REVIEW OF CONTRACT AND FIELD CONDITIONS BY CONTRACTOR*

3.2.1 Contractor shall carefully study and compare documents contained in the Contract with each other and with information furnished by the City pursuant to Section 2.2 and shall immediately report, in writing, any errors, inconsistencies, or omissions to City Engineer. If work is affected, Contractor shall obtain a written interpretation or clarification from City Engineer before proceeding with the affected work. However, Contractor will not be liable to the City for failure to report an error, inconsistency, or omission in the Contract unless Contractor had actual knowledge or should have had knowledge of the error, inconsistency, or omission.

3.2.2 Contractor shall take field measurements and verify field conditions, and shall carefully compare the conditions and other information known to Contractor with the Contract, before commencing activities. Contractor shall immediately report, in writing, to City Engineer for interpretation or clarification of discrepancies, inconsistencies, or omissions discovered during this process.

3.2.3 Contractor shall make a reasonable attempt to understand the Contract before requesting interpretation from City Engineer.

3.3 *SUPERVISION AND CONSTRUCTION PROCEDURES*

3.3.1 Contractor shall supervise, direct, and inspect the Work competently and efficiently, devoting the attention and applying the skills and

expertise as necessary to perform the Work in accordance with the Contract. Contractor is solely responsible and has control over construction means, methods, techniques, sequences, and procedures of construction; for safety precautions and programs in connection with the Work; and for coordinating all work under the Contract.

3.3.2 Regardless of observations or inspections by the City or City's consultants, Contractor shall perform and complete the Work in accordance with the Contract and submittals approved pursuant to Section 3.18. The City is not liable or responsible to Contractor or Surety for work performed by Contractor that is not in accordance with the Contract regardless of whether discovered during construction or after acceptance of the Work.

3.4 *SUPERINTENDENT*

3.4.1 Contractor shall employ a competent Superintendent and necessary assistants who shall be present at the site during performance of the Work. Communications given to Superintendent are binding on the Contractor.

3.4.2 Contractor shall notify City Engineer in writing of its intent to replace the Superintendent. Contractor may not replace the Superintendent if City Engineer makes a reasonable objection in writing.

3.5 *LABOR*

3.5.1 Contractor shall provide competent, qualified personnel to survey and lay out the Work and perform construction as required by the Contract. The City may, by written notice, require Contractor to remove from the Work any employee of Contractor or Subcontractors to whom City Engineer makes reasonable objection.

3.5.2 Contractor shall comply with the applicable Business Enterprise Policy set out in this Agreement and in the Supplementary Conditions.

3.5.3 When Original Contract Price is greater than $1,000,000, Contractor shall make Good Faith Efforts to award subcontracts or supply agreements in at least the percentages set out in the Supplementary Conditions for Business Enterprise Policy. Contractor acknowledges that it has reviewed the requirements for Good Faith Efforts on file with the City's Mayor's Office of Business Opportunity and shall comply with them.

3.5.3.1 Contractor shall require written subcontracts with Business Enterprises and shall submit all disputes with Business Enterprises to binding arbitration to be conducted in Houston, Texas, if directed to do so by the Mayor's Office of Business Opportunity Director ("Director"). Business Enterprise subcontracts complying with City Code of Ordinances Chapter 15, Article II must contain the terms set out in Subparagraph 3.5.3.2. If Contractor is an individual person, as distinguished from a corporation, partnership, or other legal entity, and the amount of the subcontract is $50,000 or less, the subcontract must also be signed by the attorneys of the respective parties.

3.5.3.2 Contractor shall ensure that subcontracts with Business Enterprise firms are clearly labeled **"THIS CONTRACT IS SUBJECT TO ARBITRATION ACCORDING TO THE TEXAS GENERAL ARBITRATION ACT"** and contain the following terms:

.1 (Business Enterprise) may not delegate or subcontract more than 50 percent of work under this subcontract to any other subcontractor without the express written consent of the Director.

.2 (Business Enterprise) shall permit representatives of the City of Houston, at all reasonable times, to perform (1) audits of the books and records of the Subcontractors and Suppliers, and (2) inspections of all places where work is to be undertaken in connection with this subcontract. (Business Enterprise) shall keep the books and records available for this purpose for at least four years after the end of its performance under this subcontract. Nothing in this Section shall affect the time for bringing a cause of action nor the applicable statute of limitations.

.3 Within five business days of execution of this subcontract, Contractor and (Business Enterprise) shall designate in writing to the Director an agent for receiving any notice required or permitted to be given pursuant to Chapter 15 of the Houston City Code of Ordinances, along with the street and mailing address and phone number of the agent.

.4 As concluded by the parties to this subcontract, and as evidenced by their signature to this subcontract, any controversy between the parties involving the construction or application of the terms of this subcontract will, on the written request of one party served upon the other or upon notice by Director served on both parties, be submitted to arbitration, under the

Texas General Arbitration Act (TEX. CIV. PRAC. & REM. CODE ANN., Ch 171 -- "Act"). Arbitration will be conducted according to the following procedures:

.1 Upon the decision of the Director or upon written notice to the Director from either party that a dispute has arisen, the Director shall notify all parties that they must resolve the dispute within 30 days or the matter may be referred to arbitration.

.2 If the dispute is not resolved within the time specified, any party or the Director may submit the matter to arbitration governed by the American Arbitration Association rules.

.3 Upon submittal of the matter to arbitration, each party shall pay all fees required by the American Arbitration Association and its arbitrators from liability for decisions reached in the arbitration.

.4 If the City contracts with an organization other than the American Arbitration Association to provide arbitration services related to disputes between prime contractors and Business Enterprise firms, the parties may, at their option, proceed with arbitration before the American Arbitration Association or with the organization the City has contracted with.

.5 All arbitrations will be conducted in Houston, Texas unless the parties agree to another location in writing.

3.5.4 The requirements and terms of the City of Houston Pay or Play Program, as set out in Executive Order 1-7 and Ordinance 2007-0534, are incorporated into the Contract for all purposes. Contractor shall comply with the terms and conditions of the Pay or Play Program as they are set out at the time of City Council approval of this agreement. IF CONTRACTOR DOES NOT PAY IN ACCORDANCE WITH THE PAY OR PLAY PROGRAM WITHIN 30 DAYS OF THE DATE CITY ENGINEEER SENDS CONTRACTOR WRITTEN NOTIFICATION, CITY CONTROLLER MAY DEDUCT FUNDS UP TO THE AMOUNT OWED FROM ANY PAYMENTS OWED TO CONTRACTOR UNDER THIS AGREEMENT, AND CONTRACTOR WAIVES ANY RECOURSE.

3.6 *PREVAILING WAGE RATES*

3.6.1 Contractor shall comply with governing statutes providing for labor classification of wage scales for each craft or type of laborer, worker, or mechanic.

3.6.2 Prevailing wage rates applicable to the Work may be one or a combination of the following wage rates identified in Division 00:

.1 Federal Wage Rate General Decisions
- .1 Highway Rates
- .2 Building Rates
- .3 Heavy Construction Rates
- .4 Residential Rates

.2 City Prevailing Wage Rates
- .1 Building Construction Rates
- .2 Engineering Construction Rates
- .3 Asbestos Worker Rates

3.6.3 Each week Contractor shall submit to the City's Mayor's Office of Business Opportunity certified copies of payrolls showing classifications and wages paid by Contractor, Subcontractors, and Suppliers for each employee under the Contract, for any day included in the Contract.

3.7 *LABOR CONDITIONS*

3.7.1 In the event of labor disputes affecting Contractor or Contractor's employees, Contractor shall utilize all possible means to resolve disputes in order that the Work not be delayed to any extent. These means will include seeking injunctive relief and filing unfair labor practice charges, and any other action available to Contractor.

3.7.2 When Contractor has knowledge that any actual or potential labor dispute is delaying or is threatening to delay timely performance of the Work, Contractor shall immediately notify City Engineer in writing. No Claims will be accepted by City Engineer for costs incurred as a result of jurisdictional or labor disputes.

3.8 *DRUG DETECTION AND DETERRENCE*

3.8.1 It is the policy of the City to achieve a drug-free work force and to provide a workplace that is free from the use of illegal drugs and alcohol. It is also the policy of the City that manufacture, distribution, dispensation, possession, sale, or use of

illegal drugs or alcohol by contractors while on the City's premises is prohibited. By executing the Contract, Contractor represents and certifies that it meets and will comply with all requirements and procedures set forth in the Mayor's Policy on Drug Detection and Deterrence, City Council Motion No. 92-1971 ("Mayor's Policy") and the Mayor's Drug Detection and Deterrence Procedures for Contractors, Executive Order No. 1-31, (Revised) ("Executive Order"). Mayor's Policy is on file in the office of the City Secretary. Copies of Executive Order may be obtained at the location specified in the Advertisement for Bids.

3.8.1.1 The Executive Order applies to the City's contracts for labor or services except the following:

.1 contracts authorized by Emergency Purchase Orders,

.2 contracts in which imposition of requirements of the Executive Order would exclude all potential bidders or proposers, or would eliminate meaningful competition for the Contract,

.3 contracts with companies that have fewer than 15 employees during any 20-week period during a calendar year and no safety impact positions,

.4 contracts with non-profit organizations providing services at no cost or reduced cost to the public, and

.5 contracts with federal, state, or local governmental entities.

3.8.1.2 Prior to execution of the Contract, Contractor shall have filed with the City:

.1 a Drug Policy Compliance Agreement form (Attachment "A" to the Executive Order), and

.2 a copy of Contractor's drug free workplace policy, and

.3 a written designation of all safety impact positions, if applicable, or a Contractor's Certification of a No Safety Impact Positions form (Attachment "C" to the Executive Order).

3.8.1.3 Every six months during performance of the Contract and upon completion of the Contract, Contractor shall file a Drug Policy Compliance Declaration form (Attachment "B" to the Executive Order). The Contractor shall submit the Drug Policy Compliance Declaration within 30 days of expiration of each six-month period of performance and within 30 days of completion of the Contract. The first six-month period shall begin on Date of Commencement of the Work.

3.8.1.4 Contractor shall have a continuing obligation to file updated designation of safety impact positions when additional safety impact positions are added to Contractor's employee workforce during performance of the Work.

3.8.1.5 Contractor shall require its Subcontractors and Suppliers to comply with the Mayor's Policy and Executive Order. Contractor is responsible for securing and maintaining required documents from Subcontractors and Suppliers for the City inspection throughout the term of the Contract.

3.8.1.6 Failure of Contractor to comply with requirements will be a material breach of the Contract entitling the City to terminate in accordance with Section 14.1.

3.9 *MATERIALS & EQUIPMENT*

3.9.1 Unless otherwise provided in the Contract, Contractor shall provide and assume full responsibility for Products, labor, transportation, construction equipment and machinery, tools, appliances, fuel, power, light, heat, telephone, water, sanitary facilities, transportation, temporary facilities, supplies, and other facilities and incidentals necessary for Furnishing, performing, testing, starting-up, and completing the Work.

3.9.1.1 Contractor, Subcontractors, and Suppliers shall use Ultra Low Sulfur Diesel Fuel in all diesel operating vehicles and motorized equipment utilized in performing the Work. Ultra Low Sulfur Diesel Fuel is defined as diesel fuel having 15 ppm or the applicable standard set by state or federal law or rules and regulations of the Texas Commission on Environmental Quality, or the Environmental Protection Agency, whichever is less in sulfur content. Off-road Ultra Low Sulfur Diesel Fuel may be used in lieu of on-road Ultra Low Sulfur Diesel Fuel. Contractor shall provide, upon request by City Engineer, proof that Contractor, Subcontractors, and Suppliers are using Ultra Low Sulfur Diesel Fuel.

3.9.2 Contractor shall provide Products that are:

.1 new, unless otherwise required or permitted by the Contract, and

.2 of specified quality.

If required by City Engineer, Contractor shall furnish satisfactory evidence, including reports of required tests, as to kind and quality of Products.

3.9.3 Contractor shall store Products in a safe, neat, compact, and protected manner. Contractor shall also store Products delivered during the work, along the right-of-way:

.1 so as to cause the least inconvenience to property owners, tenants, and general public; and
.2 so as not to block access to, or be closer than, three feet to any fire hydrant.

Contractor shall protect trees, lawns, walks, drives, streets, and other improvements that are to remain, from damage. If private or public property is damaged by Contractor, Contractor shall, at its sole expense, restore the damaged property to at least its original condition.

3.9.3.1 Contractor shall obtain City Engineer's approval for storage areas used for Products for which payment has been requested under Paragraph 9.6.1. Contractor shall provide the City access to the storage areas for inspection purposes. Products, once paid for by the City, become the property of the City and may not be removed from place of storage, without City Engineer's written permission except for a movement to the site. Contractor's Installation Floater, required under Section 11.2, shall cover all perils, including loss or damage to Products during storage, loading, unloading, and transit to the site.

3.10 *PRODUCT OPTIONS AND SUBSTITUTIONS*

3.10.1 For Products specified by reference standards or by description only, Contractor may provide any Product meeting those standards or description.

3.10.2 For Products specified by naming one or more manufacturers with provision for substitutions or equal, Contractor may submit a request for substitution for any manufacturer not named.

3.10.3 City Engineer will consider requests for substitutions only within the first 15 percent of Contract Time, or first 90 days after date of Notice to Proceed, whichever is less.

3.10.4 Contractor shall document each request for substitution with complete data substantiating compliance of proposed substitution with the Contract.

3.10.5 A request for substitution constitutes a representation that Contractor:

.1 has investigated the proposed Product and determined that it meets or exceeds the quality level of the specified Product;
.2 shall provide the same warranty for the substitution as for the specified Product;
.3 shall coordinate installation of the proposed substitution and make changes to other work which may be required for the Work to be completed, with no additional cost or increase in time to the City;
.4 confirms that cost data is complete and includes all related costs under the Contract;
.5 waives Claim for additional costs or time extensions that may subsequently become apparent; and
.6 shall provide review or redesign services by a design consultant with appropriate professional license and shall obtain re-approval and permits from authorities.

3.10.6 City Engineer will not consider and will not approve substitutions when:

.1 they are indicated or implied on Shop Drawing or Product Data submittals without separate written request; or
.2 acceptance will require revision to the Contract.

3.10.7 City Engineer may reject requests for substitution, and his decision will be final and binding on the Parties.

3.11 *CASH ALLOWANCES*

3.11.1 Contract Price includes Cash Allowances as identified in the Contract.

3.11.2 The City will pay the actual costs of Cash Allowance item exclusive of profit, overhead or administrative costs. If actual costs exceed the Cash Allowance, City Engineer must approve a Change Order for the additional costs.

3.12 *WARRANTY*

3.12.1 Contractor warrants to the City that Products furnished under the Contract are:

.1 free of defects in title;
.2 of good quality; and
.3 new, unless otherwise required or permitted by the Contract.

If required by the City Engineer, Contractor shall furnish satisfactory evidence as to kind, quality and title of Products, and that Products conform to requirements of the Contract.

3.12.2 In the event of a defect in a Product, either during construction or warranty period, Contractor shall take appropriate action with manufacturer of Product to assure correction or replacement of defective Product with minimum delay.

3.12.3 Contractor warrants that the Work is free of defects not inherent in the quality required or permitted, and that the Work does conform with the requirements of the Contract. Contractor further warrants that the Work has been performed in a thorough and workmanlike manner.

3.12.4 Contractor warrants that the Work is free of concentrations on polychlorinated biphenyl (PCB) and other substances defined as hazardous by the Comprehensive Environmental Response Compensation and Liability Act (CERCLA) or any other applicable law or regulation.

3.12.5 Work not conforming to requirements of Section 3.12, including substitutions not properly approved and authorized, may be considered nonconforming work.

3.12.6 Contractor's warranty excludes remedy for damage or defect caused by:

.1 improper or insufficient maintenance by the City;
.2 normal wear and tear under normal usage; or
.3 claim that hazardous material was incorporated into the Work, if that material was specified in the Contract.

3.12.7 Contractor warrants that title to all work covered by Contractor's request for payment passes to the City upon incorporation into the Work or upon Contractor's receipt of payment, whichever occurs first. The Contractor further warrants that the title is free of all liens, claims, security interests or other interests ("Encumbrances"). If not, upon written demand from City Engineer, Contractor shall immediately take legal action necessary to remove Encumbrances.

3.13 *TAXES*

3.13.1 Contractor shall pay all sales, consumer, use, and similar taxes, which are in effect or scheduled to go into effect on or before bids are received, related to work provided by Contractor.

3.13.2 Contractor shall obtain, and require Subcontractors and Suppliers to obtain, necessary permits from the state and local taxing authorities to perform contractual obligations under the Contract, including sales tax permits.

3.13.3 The City is exempt from the Federal Transportation and Excise Tax. Contractor shall comply with federal regulations governing the exemptions.

3.13.4 Products incorporated into the Work are exempt from state sales tax according to provisions of the TEX. TAX CODE ANN. CH. 151, Subsection H.

3.14 *PERMITS, FEES, AND NOTICES*

3.14.1 Unless otherwise provided in the Contract, Contractor shall secure and pay for all construction permits, licenses, and inspections:

.1 necessary for proper execution and completion of the Work; and
.2 legally required at time bids are received.

3.15 *CONSTRUCTION SCHEDULES*

3.15.1 On receipt of Notice to Proceed, Contractor shall promptly prepare and submit construction schedule for the Work for City Engineer's review. The schedule must reflect the minimum time required to complete the Work not to exceed Contract Time.

3.15.2 Contractor shall give 24-hour written notice to City Engineer before commencing work or resuming work where work has been stopped. Contractor shall also give the same notice to inspectors.

3.15.3 Contractor shall incorporate milestones specified in Summary of Work Specification into the construction schedule. Contractor's failure to meet a milestone, as determined by City Engineer, may be considered a material breach of the Contract.

3.15.4 Each month, Contractor shall submit to City Engineer a copy of an updated construction schedule indicating actual progress, incorporating applicable changes, and indicating courses of action required to assure completion of the Work within Contract Time.

3.15.5 Contractor shall keep a current schedule of submittals that coordinates with the construction schedule, and shall submit the initial schedule of submittals to City Engineer for approval.

3.16 *DOCUMENTS AND SAMPLES AT THE SITE*

3.16.1 Contractor shall maintain at the site, and make available to City Engineer, one record copy of Drawings, Specifications, and Modifications. Contractor shall maintain the documents in good order and marked currently to record changes and selections made during construction. In addition, Contractor shall maintain at the site, approved Shop Drawings, Product Data, Samples, and similar submittals, which will be delivered to City Engineer prior to final inspection as required in Paragraph 9.11.4.

3.16.2 Contractor shall maintain all books, documents, papers, accounting records, and other relevant documentation pursuant to the Work and shall make the books, documents, papers, and accounting records available to representatives of the City for review and audits during the Contract term and for the greater of three years following Date of Substantial Completion or until all litigation or audits are fully resolved.

3.16.3 Contractor shall provide to City Attorney all documents and records that City Attorney deems necessary to assist in determining Contractor's compliance with the Contract, with the exception of those documents made confidential by federal or state law or regulation.

3.17 *MANUFACTURER'S SPECIFICATIONS*

3.17.1 Contractor shall handle, store, and Install Products and perform all work in the manner required by Product manufacturer. Should the Contract and manufacturer's instructions conflict, Contractor shall report conflict to City Engineer for resolution prior to proceeding with the affected work.

3.17.2 References in the Contract to the manufacturer's specifications, directions, or recommendations, mean manufacturer's current published documents in effect as of date of receipt of bids, or in the case of a Modification, as of date of Modification.

3.18 SHOP DRAWINGS, PRODUCT DATA, AND SAMPLES

3.18.1 Shop Drawings, Product Data, and Samples are not part of the Contract. The purpose of Contractor submittals is to demonstrate, for those portions of the Work for which submittals are required, the way Contractor proposes to conform to information given and design concept expressed in the Contract.

3.18.2 Contractor shall submit to Project Manager for review the Shop Drawings, Product Data, and Samples, which are required by the Contract. Review by Project Manager is subject to limitations of Paragraph 4.1.4. Contractor shall transmit the submittals to the Project Manager with reasonable promptness and in a sequence, so as to cause no delay in the Work or in activities of the City or of separate contractors. Contractor shall transmit submittals in time to allow a minimum of 30 days for Project Manager's review prior to date Contractor needs reviewed submittals returned. This time may be shortened for a particular job requirement if approved by Project Manager in advance of submittal.

3.18.3 Contractor shall certify that the content of submittals conforms to the Contract without exception by affixing Contractor's approval stamp and signature. By certifying and submitting Shop Drawings, Product Data, and Samples, Contractor represents, and Contractor's stamp of approval shall state, that Contractor has determined and verified materials, quantities, field measurements, and field construction criteria related to the submittal, and has checked and coordinated information contained within the submittals with requirements of the Contract.

3.18.4 Contractor may not perform any work requiring submittal and review of Shop Drawings, Product Data, or Samples until the submittal has been returned with appropriate review decision by the Project Manager. Contractor shall perform work in accordance with the review.

3.18.5 If Contractor performs any work requiring submittals prior to review and acceptance of the submittals by Project Manager, such work is at Contractor's risk and the City is not obligated to accept work if the submittals are later found to be unacceptable.

3.18.6 If, in the opinion of Project Manager, the submittals are incomplete, or demonstrate an inadequate understanding of the Work or lack of review by the Contractor, then submittals may be returned to the Contractor for correction and resubmittal.

3.18.7 Contractor shall direct specific attention in writing and on the resubmitted Shop Drawings, Product Data, or Samples to any additional proposed revisions, other than those revisions requested by Project Manager on previous submittals.

3.18.8 Contractor is not relieved of responsibility for deviations from requirements of the Contract by Project Manager's review of Shop Drawings, Product Data, or Samples unless Contractor has specifically informed Project Manager in writing of the deviation at the time of the submittal, and Project Manager has given written approval of the deviation.

3.18.9 When professional certification of performance criteria of Products is required by the Contract, the City may rely upon accuracy and completeness of the calculations and certifications.

3.18.10 For Product colors or textures to be selected by the City, Contractor shall submit all samples together to allow preparation of a complete selection schedule.

3.18.11 Contractor shall submit informational submittals, on which Project Manager is not expected to take responsive action, as required by the Contract.

3.18.12 Submittals made by Contractor which are not required by the Contract may be returned to Contractor without action.

3.19 *CULTURAL RESOURCES AND ENDANGERED SPECIES*

3.19.1 Contractor may not remove or disturb, or cause to be removed or disturbed, any historical, archaeological, architectural, or other cultural artifacts, relics, vestiges, remains, or objects of antiquity. If Contractor discovers one of these items, Contractor shall immediately notify City Engineer and further comply with the requirements of 13 Tex. Admin. Code Chs. 25 and 26 (2002), or successor regulation. Contractor shall protect site and cultural resources from further disturbance until professional examination can be made or until clearance to proceed is authorized in writing by City Engineer.

3.19.2 Should either threatened or endangered plant or animal species be encountered, Contractor shall cease work immediately in the area of encounter and notify City Engineer.

3.20 *CUTTING AND PATCHING*

3.20.1 Contractor is responsible for necessary cutting, fitting, and patching to accomplish the Work and shall suitably support, anchor, attach, match, and trim or seal materials to work of other contractors. Contractor shall coordinate the Work with work of other contractors to minimize conflicts, as provided in Article 6.

3.20.2 Contractor may not endanger work by cutting, digging, or other action, and may not cut or alter work of other contractors except by written consent of City Engineer and affected contractor.

3.21 *CLEANING*

3.21.1 Contractor shall perform daily cleanup of all dirt, debris, scrap materials and other disposable items resulting from Contractor's operations, whether on-site or off-site. Unless otherwise authorized in writing by City Engineer, Contractor shall keep all streets, access streets, driveways, areas of public access, walkways, and other designated areas clean and open at all times.

3.21.2 Failure of Contractor to maintain a clean site, including access streets, is the basis for City Engineer to issue a Notice of Noncompliance. Should compliance not be attained within the time period in the Notice of Noncompliance, City Engineer may authorize necessary cleanup to be performed by others and the cost of the cleanup will be deducted from monies due Contractor.

Contractor shall legally dispose off-site, all waste materials and other excess materials resulting from Contractor's operations.

3.22 *SANITATION*

3.22.1 Contractor shall provide and maintain sanitary facilities at site for use of all construction forces under the Contract. Newly-constructed or existing sanitary facilities may not be used by Contractor.

3.23 *ACCESS TO WORK AND TO INFORMATION*

3.23.1 Contractor shall provide the City, Design Consultant, testing laboratories, and governmental agencies which have jurisdictional interests, access to the Work in preparation and in progress wherever located. Contractor shall provide proper and safe conditions for the access.

3.23.2 If required by City Engineer, Contractor shall furnish information concerning character of Products and progress and manner of the Work, including information necessary to determine cost of the Work, such as number of employees, pay of employees, and time employees worked on various classes of the Work.

3.24 *TRADE SECRETS*

3.24.1 Contractor will not make any claim of ownership of trade secrets as to products used in the Work, or preparation of any mixture for the Work. City Engineer will at all times have the right to demand and Contractor shall furnish information concerning materials or samples of ingredients of any materials used, or proposed to be used, in preparation of concrete placed or other work to be done. Mixtures, once agreed on, shall not be changed in any manner without knowledge and consent of City Engineer. The City will make its best efforts to protect confidentiality of proprietary information.

3.25 *INDEMNIFICATION*

3.25.1 CONTRACTOR AGREES TO AND SHALL DEFEND, INDEMNIFY, AND HOLD THE CITY, ITS AGENTS, EMPLOYEES, OFFICERS, AND LEGAL REPRESENTATIVES (COLLECTIVELY THE "CITY") HARMLESS FOR ALL CLAIMS, CAUSES OF ACTION, LIABILITIES, FINES, AND EXPENSES (INCLUDING, WITHOUT LIMITATION, ATTORNEYS' FEES, COURT COSTS, AND ALL OTHER DEFENSE COSTS AND INTEREST) FOR INJURY, DEATH, DAMAGE, OR LOSS TO PERSONS OR PROPERTY SUSTAINED IN CONNECTION WITH OR INCIDENTAL TO PERFORMANCE UNDER THE CONTRACT INCLUDING, WITHOUT LIMITATION, THOSE CAUSED BY:

.1 CONTRACTOR'S AND/OR ITS AGENTS', EMPLOYEES', OFFICERS', DIRECTORS', CONTRACTORS', OR SUBCONTRACTORS' (COLLECTIVELY IN NUMBERED SUBPARAGRAPHS .1 through .3, "CONTRACTOR") ACTUAL OR ALLEGED NEGLIGENCE OR INTENTIONAL ACTS OR OMISSIONS;

.2 THE CITY'S AND CONTRACTOR'S ACTUAL OR ALLEGED CONCURRENT NEGLIGENCE, WHETHER CONTRACTOR IS IMMUNE FROM LIABILITY OR NOT;

.3 THE CITY'S AND CONTRACTOR'S ACTUAL OR ALLEGED STRICT PRODUCTS LIABILITY OR STRICT STATUTORY LIABILITY, WHETHER CONTRACTOR IS IMMUNE FROM LIABILITY OR NOT.

CONTRACTOR SHALL DEFEND, INDEMNIFY, AND HOLD THE CITY HARMLESS DURING THE TERM OF THE CONTRACT AND FOR FOUR YEARS AFTER THE CONTRACT TERMINATES. CONTRACTOR SHALL NOT INDEMNIFY THE CITY FOR THE CITY'S SOLE NEGLIGENCE.

3.25.2 NOTWITHSTANDING ANYTHING TO THE CONTRARY, THE LIABILITY OF CONTRACTOR FOR THE CITY'S CONCURRENT NEGLIGENCE SHALL NOT EXCEED $1,000,000.

3.26 *RELEASE AND INDEMNIFICATION – PATENT, COPYRIGHT, TRADEMARK, AND TRADE SECRET INFRINGEMENT*

3.26.1 UNLESS OTHERWISE SPECIFICALLY REQUIRED BY THE CONTRACT, CONTRACTOR AGREES TO AND SHALL RELEASE AND DEFEND, INDEMNIFY, AND HOLD HARMLESS THE CITY, ITS AGENTS, EMPLOYEES, OFFICERS, AND LEGAL REPRESENTATIVES (COLLECTIVELY THE "CITY") FROM ALL CLAIMS OR CAUSES OF ACTION BROUGHT AGAINST THE CITY BY ANY PARTY, INCLUDING CONTRACTOR, ALLEGING THAT THE CITY'S USE OF ANY EQUIPMENT, SOFTWARE, PROCESS, OR DOCUMENTS CONTRACTOR FURNISHES DURING THE TERM OF THE CONTRACT INFRINGES ON A PATENT, COPYRIGHT, OR TRADEMARK, OR MISAPPROPRIATES A TRADE SECRET. CONTRACTOR SHALL PAY ALL COSTS (INCLUDING, WITHOUT LIMITATION, ATTORNEYS' FEES, COURT COSTS, AND ALL OTHER DEFENSE COSTS, AND INTEREST) AND DAMAGES AWARDED.

3.26.2 CONTRACTOR SHALL NOT SETTLE ANY CLAIM ON TERMS WHICH PREVENT THE CITY FROM USING THE EQUIPMENT, SOFTWARE, PROCESS, OR PRODUCT WITHOUT THE CITY ENGINEER'S PRIOR WRITTEN CONSENT.

3.26.3 UNLESS OTHERWISE SPECIFICALLY REQUIRED BY THE CONTRACT, WITHIN 60 DAYS AFTER BEING NOTIFIED OF THE CLAIM, CONTRACTOR SHALL, AT ITS OWN EXPENSE, EITHER:

.1 OBTAIN FOR THE CITY THE RIGHT TO CONTINUE USING THE EQUIPMENT, SOFTWARE, PROCESS, OR PRODUCT, OR

.2 IF BOTH PARTIES AGREE, REPLACE OR MODIFY THEM WITH COMPATIBLE AND FUNCTIONALLY EQUIVALENT PRODUCTS.

IF NONE OF THESE ALTERNATIVES IS REASONABLY AVAILABLE, THE CITY MAY RETURN THE EQUIPMENT, SOFTWARE, OR PRODUCT, OR DISCONTINUE THE PROCESS,

AND CONTRACTOR SHALL REFUND THE PURCHASE PRICE.

3.27 *INDEMNIFICATION PROCEDURES*

3.27.1 *Notice of Indemnification Claims:* If the City or Contractor receives notice of any claim or circumstances which could give rise to an indemnified loss, the receiving party shall give written notice to the other Party within 10 days. The notice must include the following:

.1 a description of the indemnification event in reasonable detail,
.2 the basis on which indemnification may be due, and
.3 the anticipated amount of the indemnified loss.

This notice does not estop or prevent the City from later asserting a different basis for indemnification or a different amount of indemnified loss than that indicated in the initial notice. If the City does not provide this notice within the 10-day period, it does not waive any right to indemnification except to the extent that Contractor is prejudiced, suffers loss, or incurs expense because of the delay.

3.27.2 *Defense of Indemnification Claims:*

.1 *Assumption of Defense:* Contractor may assume the defense of the claim at its own expense with counsel chosen by it that is reasonably satisfactory to the City. Contractor shall then control the defense and any negotiations to settle the claim. Within 10 days after receiving written notice of the indemnification request, Contractor must advise the City as to whether or not it will defend the claim. If Contractor does not assume the defense, the City shall assume and control the defense, and all defense expenses constitute an indemnified loss.

.2 *Continued Participation:* If Contractor elects to defend the claim, the City may retain separate counsel to participate in, but not control, the defense and to participate in, but not control, any settlement negotiations. Contractor may settle the claim without the consent or agreement of the City, unless it:

.1 would result in injunctive relief or other equitable remedies or otherwise require the City to comply with restrictions or limitations that adversely affect the City;
.2 would require the City to pay amounts that Contractor does not fund in full; or
.3 would not result in the City's full and complete release from all liability to the plaintiffs or claimants who are parties to or otherwise bound by the settlement.

3.28 *CONTRACTOR DEBT*

IF CONTRACTOR, AT ANY TIME DURING THE TERM OF THIS AGREEMENT, INCURS A DEBT, AS THE WORD IS DEFINED IN SECTION 15-122 OF THE HOUSTON CITY CODE OF ORDINANCES, IT SHALL IMMEDIATELY NOTIFY CITY CONTROLLER IN WRITING. IF CITY CONTROLLER BECOMES AWARE THAT CONTRACTOR HAS INCURRED A DEBT, IT SHALL IMMEDIATELY NOTIFY CONTRACTOR IN WRITING. IF CONTRACTOR DOES NOT PAY THE DEBT WITHIN 30 DAYS OF EITHER SUCH NOTIFICATION, CITY CONTROLLER MAY DEDUCT FUNDS IN AN AMOUNT EQUAL TO THE DEBT FROM ANY PAYMENTS OWED TO CONTRACTOR UNDER THIS AGREEMENT, AND CONTRACTOR WAIVES ANY RECOURSE THEREFOR. CONTRACTOR SHALL FILE A NEW AFFIDAVIT OF OWNERSHIP, USING THE FORM DESIGNATED BY CITY, BETWEEN FEBRUARY 1 AND MARCH 1 OF EVERY YEAR DURING THE TERM OF THE CONTRACT.

ARTICLE 4 - ADMINISTRATION OF THE CONTRACT

4.1 *CONTRACT ADMINISTRATION*

4.1.1 City Engineer will provide administration of the Contract and City Engineer is authorized to issue Change Orders, Work Change Directives, and Minor Changes in the Work.

4.1.2 City Engineer may act through Project Manager, Design Consultant, or Inspector. When the term "City Engineer" is used in the Contract, action by City Engineer is required unless City Engineer delegates his authority in writing. The City Engineer may not delegate authority to render decisions under Section 4.4.

The City does not have control over or charge of, and is not responsible for, supervision, construction, and safety procedures enumerated in Section 3.3. The City does not have control over or charge of and

is not responsible for acts or omissions of Contractor, Subcontractors, or Suppliers.

4.1.3 The City and Design Consultant may attend project meetings and visit the site to observe progress and quality of the Work. The City and Design Consultant are not required to make exhaustive or continuous on-site inspections to check quality or quantity of the Work.

4.1.4 Project Manager will review and approve or take other appropriate action on Contractor's submittals, but only for limited purpose of checking for conformance with information given and design concept expressed in the Contract.

4.1.5 Project Manager's review of the submittals is not conducted for purpose of determining accuracy and completeness of other details, such as dimensions and quantities, or for substantiating instructions for installation or performance of Products, all of which remain the responsibility of Contractor.

4.1.6 Project Manager's review of submittals does not relieve Contractor of its obligations under Sections 3.3, 3.12, and 3.18. Review does not constitute approval of safety precautions or, unless otherwise specifically stated by Project Manager in writing, of construction means, methods, techniques, sequences, or procedures. Project Manager's review of a specific item does not indicate approval of an assembly of which the item is a component.

4.1.7 Based on field observations and evaluations, Project Manager will process Contractor's progress payments, certify amounts due Contractor, and issue Certificates for Payment in the amount certified.

4.1.8 Project Manager will receive and forward to City Engineer for his review and records, written warranties and related documents required by the Contract and assembled by Contractor.

4.1.9 Upon written request by Contractor or Project Manager, City Engineer will resolve matters of interpretation of or performance of the Contract, which are not Claims. City Engineer's decisions are final and binding on the Parties.

4.1.10 City Engineer may reject work which does not conform to the Contract.

4.1.11 When City Engineer considers it necessary to implement the intent of the Contract, City Engineer may require additional inspection or testing of work in accordance with Paragraphs 13.6.3 and 13.6.4, whether such work is fabricated, Installed, or completed.

4.2 *COMMUNICATIONS IN ADMINISTRATION OF THE CONTRACT*

4.2.1 Except as otherwise provided in the Contract or when authorized by City Engineer in writing, Contractor shall communicate with Project Manager. Contractor shall communicate with Design Consultant, Design Consultant's subconsultants, and separate contractors through Project Manager. The City will communicate with Subcontractors and Suppliers through Contractor.

4.3 *CLAIMS AND DISPUTES*

4.3.1 *Documentation by Project Manager:* Contractor shall submit Claims, including those alleging an error or omission by Project Manager or Design Consultant, to Project Manager for documentation and recommendation to City Engineer.

4.3.2 *Decision of City Engineer:* Upon submission of Claim by Project Manager or Contractor, City Engineer will resolve Claims in accordance with Section 4.4.

4.3.3 *Time Limits on Claims:* Claims by Contractor must be made within 90 days after occurrence of event giving rise to the Claim.

4.3.4 *Continuing the Contract Performance:* Pending final resolution of a Claim including referral to non-binding mediation, unless otherwise agreed in writing, Contractor shall proceed diligently with the performance of the Contract and the City will continue to make payments in accordance with the Contract.

4.3.4.1 Pending final resolution of a Claim including referral to non-binding mediation, Contractor is responsible for safety and protection of physical properties and conditions at site.

4.3.5 *Claims for Concealed or Unknown Conditions:* Concealed or unknown physical conditions include utility lines, other man-made structures, storage facilities, Pollutants and Pollutant Facilities, and the like, but do not include conditions arising from Contractor operations, or failure of Contractor to properly protect and safeguard subsurface facilities. Concealed conditions also

include naturally-occurring soil conditions outside the range of soil conditions identified through geotechnical investigations, but do not include conditions arising from groundwater, rain, or flood.

4.3.5.1 If conditions are encountered at the site which are Underground Facilities or otherwise concealed or unknown conditions which differ materially from:

.1 those indicated by the Contract; or
.2 conditions which Contractor could have discovered through site inspection, geotechnical testing, or otherwise;

then Contractor will give written notice to City Engineer no later than five days after Contractor's first observation of the condition and before condition is disturbed. Contractor's failure to provide notice constitutes a waiver of a Claim.

4.3.5.2 City Engineer will promptly investigate concealed or unknown conditions. If City Engineer determines that conditions at the site are not materially different and that no change in Contract Price or Contract Time is justified, City Engineer will notify Contractor in writing, stating reasons. If City Engineer determines the conditions differ materially and cause increase or decrease in Contractor's cost or time required for performance of part of the Work, City Engineer will recommend an adjustment in Contract Price or Contract Time, or both, as provided in Article 7. Opposition by a Party to the City Engineer's determination must be made within 21 days after City Engineer has given notice of the decision. If the Parties cannot agree on adjustment to Contract Price or Contract Time, adjustment is subject to further proceedings pursuant to Section 4.4.

4.3.6 *Claims for Additional Cost:* If Contractor wishes to make a Claim for increase in Contract Price, Contractor shall give written notice before proceeding with work for which Contractor intends to submit a Claim. Prior notice is not required for Claims relating to an emergency endangering life or property arising under Section 10.4.

4.3.6.1 Contractor may file a Claim in accordance with Section 4.4 if Contractor believes it has incurred additional costs, for the following reasons:

.1 written interpretation of City Engineer;
.2 order by City Engineer to stop the Work when Contractor is not at fault;
.3 suspension of the Work by City Engineer;
.4 termination of the Contract by City Engineer; or
.5 The City's non-compliance with another provision of the Contract.

4.3.6.2 No increase in Contract Price is allowed for delays or hindrances to the Work, except for direct and unavoidable extra costs to Contractor caused by failure of the City to provide information and services, or to make land and materials available, when required of the City under the Contract. Any increase claimed is subject to the provisions of Section 4.4 and Article 7.

4.3.6.3 The City is not liable for Claims for delay when Date of Substantial Completion occurs prior to expiration of Contract Time.

4.3.7 *Claims for Additional Time:* If Contractor wishes to make a Claim for an increase in Contract Time, Contractor shall give written notice as provided in Section 8.2. In case of continuing delay, only one Claim is necessary.

4.4 *RESOLUTION OF CLAIMS AND DISPUTES*

4.4.1 City Engineer will review Claims and take one or more of the following preliminary actions within 30 days of receipt of Claim:

.1 submit a suggested time to meet and discuss the Claim with City Engineer;
.2 reject Claim, in whole or in part, stating reasons for rejection;
.3 recommend approval of the Claim by the other Party;
.4 suggest a compromise; or
.5 take other actions as City Engineer deems appropriate to resolve the Claim.

4.4.2 City Engineer may request additional supporting data from claimant. Party making Claim shall, within 10 days after receipt of City Engineer's request, submit additional supporting data requested by City Engineer.

4.4.3 At any time prior to rendering a written decision regarding a Claim, City Engineer may refer Claim to non-binding mediation. If Claim is resolved, City Engineer will prepare and obtain all appropriate documentation. If Claim is not resolved, City Engineer will take receipt of Claim and begin a new review under Section 4.4.

4.4.4 If Claim is not referred to or settled in non-binding mediation, City Engineer may conduct a hearing and will render a written decision, including findings of fact, within 75 days of receipt of Claim, or a time mutually agreed upon by the Parties in writing. City Engineer may notify Surety and request Surety's

assistance in resolving Claim. City Engineer's decision is final and binding on the Parties.

4.5 *CONDITION PRECEDENT TO SUIT; WAIVER OF ATTORNEY FEES AND INTEREST*

4.5.1 A final decision by the City Engineer is a condition precedent to file suit in any jurisdiction for a claim made in connection with this Contract.

4.5.2 Neither the City nor Contractor may recover attorney fees for any claim brought in connection with this Contract.

4.5.3. Neither the City nor the Contractor may recover interest for any damages claim brought in connection with this Contract except as allowed by TEXAS LOCAL GOVERNMENT CODE Chapter 2251.

4.6 *INTERIM PAYMENT WAIVER & RELEASE*

4.6.1 In accordance with section 4.3, the Contractor shall use due diligence in the discovery and submission of any Claim against the City related to the Contractor's work.

4.6.2 The Contractor shall submit any Claim to the City not later than the 90th day after the occurrence of the event giving rise to the Claim.

4.6.3 Any failure to timely comply with the requirements of section 4.6.2 waives and releases any Claim when the Contractor submits an application for payment after the 90th day.

4.6.4 This waiver does not cover any retainage. In case of any conflict of law, this language shall be revised to the minimum extent necessary to avoid legal conflict. This waiver is made specifically for the benefit of the City.

ARTICLE 5 - SUBCONTRACTORS AND SUPPLIERS

5.1 *AWARD OF SUBCONTRACTS OTHER CONTRACTS FOR PORTIONS OF THE WORK*

5.1.1 Contractor may not contract with a Subcontractor, Supplier, person, or entity that City Engineer has made a reasonable and timely objection to.

5.1.2 If City Engineer has a reasonable objection to person or entity proposed by Contractor, Contractor shall propose another with whom City Engineer has no reasonable objection.

5.1.3 Contractor shall execute contracts with approved Subcontractors, Suppliers, persons, or entities before the Subcontractors or Suppliers begin work under the Contract.

5.1.4 Contractor shall notify City Engineer in writing of any proposed change of Subcontractor, Supplier, person, or entity previously accepted by the City.

5.1.5 Contractor shall make timely payments to Subcontractors and Suppliers for performance of the Contract. Contractor shall protect, defend, and indemnify the City from any claim or liability arising out of Contractor's failure to make the payments. Disputes relating to payment of Business Enterprise Subcontractors or Suppliers will be submitted to arbitration in same manner as other disputes under Business Enterprise subcontracts. Failure of Contractor to comply with decisions of arbitrator may be determined by City Engineer a material breach leading to termination of the Contract.

5.2 *CONTRACTOR RESPONSIBILITY FOR SUBCONTRACTORS*

5.2.1 Contractor is responsible to the City, as may be required by laws and regulations, for all acts and omissions of Subcontractors, Suppliers, and other persons and organizations performing or furnishing any of the Work under direct or indirect contract with Contractor.

5.2.2 Contractor shall make available to each proposed Subcontractor, prior to execution of subcontract, copies of the Contract to which Subcontractor is bound by this Section 5.2. Contractor shall notify Subcontractor of any terms of proposed subcontract which may be at variance with the Contract.

5.2.3 The City's approval of Subcontractor or Suppliers does not relieve Contractor of its obligation to perform, or to have performed to the full satisfaction of the City, the Work required by the Contract.

5.2.4 Unless there is a contractual relationship between Contractor and a Subcontractor or Supplier to the contrary, Contractor shall withhold no more retainage from Subcontractors or Suppliers than City withholds from Contractor under this Agreement.

However, once a Subcontractor or Supplier completes performance, Contractor shall release all retainage to that Subcontractor or Supplier regardless if City continues to retain under this Agreement.

5.2.5 Prior to a Subcontractor or Supplier commencing performance for Contractor, Contractor shall meet with that Subcontractor or Supplier to provide instructions on invoicing procedures, dispute resolution procedures, and statutory rights, such as claim filing procedures under the McGregor Act. Subcontractors and Suppliers must certify to the City Engineer that Contractor has fulfilled the requirements of this Section.

ARTICLE 6 - CONSTRUCTION BY THE CITY OR BY SEPARATE CONTRACTORS

6.1 *THE CITY'S RIGHT TO PERFORM CONSTRUCTION AND TO AWARD SEPARATE CONTRACTS*

6.1.1 The City may perform on-site construction operations related to the Work and as part of the Project with the City's workforce or with separate contractors.

6.2 *COORDINATION*

6.2.1 The City will coordinate activities of the City's workforce and of each separate contractor with work of Contractor, and Contractor shall cooperate with the City and separate contractors.

6.2.1.1 Contractor shall participate with other separate contractors and the City in reviewing their construction schedules when directed to do so by the Project Manager. Contractor shall make revisions to construction schedule and Contract Price deemed necessary after joint review and mutual agreement. Construction schedules shall then constitute schedules to be used by Contractor, separate contractors, and the City, until subsequently revised.

6.2.2 Contractor shall afford to the City and to separate contractors reasonable opportunity for introduction and storage of their materials and equipment, and for performance of their activities.

6.2.3 If part of Contractor's work depends on proper execution of construction or operations by the City or a separate contractor, Contractor shall, prior to proceeding with that portion of the Work, inspect the other work and promptly report to City Engineer apparent discrepancies or defects in the other construction that would render it unsuitable for the proper execution of the Work. Failure of Contractor to report apparent discrepancies or defects in the other construction shall constitute acknowledgment that the City's or separate contractor's completed or partially completed construction is fit and proper to receive Contractor's work, except as to discrepancies or defects not then reasonably discoverable.

6.3 *MUTUAL RESPONSIBILITY*

6.3.1 The responsible party bears the costs caused by delays, by improperly timed activities, or by nonconforming construction.

6.3.2 Contractor shall promptly remedy damage caused by Contractor to completed or partially completed construction or to property of the City or separate contractor.

6.3.3 Claims or disputes between Contractor and other City contractors, or subcontractors of other City contractors, working on the Project must be submitted to binding arbitration in accordance with Construction Industry Arbitration Rules of the American Arbitration Association upon demand by any party to the dispute or by the City.

6.4 *THE CITY'S RIGHT TO CLEAN UP*

6.4.1 If dispute arises among Contractor, separate contractors, and the City as to responsibility under their respective contracts for maintaining premises and surrounding area free from waste materials and rubbish as described in Section 3.21, the City may clean up and allocate cost among those responsible, as determined by City Engineer.

ARTICLE 7 - CHANGES IN THE WORK

7.1 *CHANGES*

7.1.1 Changes in scope of the Work, subject to limitations in Article 7 and elsewhere in the Contract, may be accomplished without invalidating the Contract, or without notifying Surety by:

.1 Change Order;
.2 Work Change Directive; or
.3 Minor Change in the Work.

7.1.2 The following types of Change Orders require City Council approval:

.1 a single Change Order that exceeds five percent of Original Contract Price,
.2 a Change Order which, when added to previous Change Orders, exceeds five percent of Original Contract Price,

.3 a Change Order, in which the total value of increases outside of the general scope of work approved by City Council, when added to increases outside the general scope of work approved by City Council in previous Change Orders, exceeds 40 percent of the Original Contract Price, even if the net increase to the Original Contract Price is five percent or less.
In this context, "increase" means an increase in quantity resulting from the addition of locations not within the scope of work approved by City Council, or the addition of types of goods or services not bid as unit price items.

Nothing in this Section is intended to permit an increase of the Contract Price in excess of the limit set out in TEX. LOC. GOV'T CODE ANN. §252.048 or its successor statute.

7.1.3 Contractor shall proceed promptly to execute changes in the Work provided in Modifications, unless otherwise stated in the Modification.

7.2 *WORK CHANGE DIRECTIVES*

7.2.1 A Work Change Directive cannot change Contract Price or Contract Time, but is evidence that the Parties agree that a change, ordered by directive, will be incorporated in a subsequently issued Change Order as to its effect, if any, on Contract Price or Contract Time.

7.2.2 Failure by Contractor to commence work identified in a Work Change Directive within the time specified by City Engineer, or to complete the work in a reasonable period of time, may be determined by City Engineer to be a material breach of Contract.

7.2.3 A Work Change Directive is used in the absence of total agreement of the terms of a Change Order. Interim payments are made in accordance with Paragraph 9.6.1.

7.2.4 If Contractor signs a Work Change Directive, then Contractor agrees to its terms including adjustment in Contract Price and Contract Time or method for determining them. Agreement by the Parties to adjustments in Contract Price and Contract Time are immediately recorded as a Change Order.

7.2.5 City Engineer, by Work Change Directive, may direct Contractor to take measures as necessary to expedite construction to achieve Date of Substantial Completion on or before expiration of Contract Time. When the Work is expedited solely for convenience of the City and not due to Contractor's failure to prosecute timely completion of the Work, then Contractor is entitled to an adjustment in Contract Price equal to actual costs determined in accordance with Article 7.

7.3 *ADJUSTMENTS IN CONTRACT PRICE*

7.3.1 Adjustments in Contract Price are accomplished by Change Order and are based on one of the following methods:

.1 mutual acceptance of fixed price, properly itemized and supported by sufficient data to permit evaluation;

.2 unit prices stated in the Contract or subsequently agreed upon;

.3 cost to be determined in a manner agreed upon by the Parties and mutually acceptable fixed or percentage fee; or

	Overhead	Profit
to Contractor for change in the Work performed by Subcontractors:	10 percent	0 percent
to first tier Subcontractors for change in the Work performed by its Subcontractors:	10 percent	0 percent
to Contractor and Subcontractor for change in the Work performed by their respective firms:	10 percent	5 percent

.4 as provided in Paragraph 7.3.2.

7.3.2 If Contractor does not agree with a change in Contract Price or Contract Time or the method for adjusting them specified in the Work Change Directive within 21 days from date of the Work Change Directive's issuance, method and adjustment are determined by City Engineer. If Project Manager or Contractor disagree with City Engineer's determination they then may file a Claim in accordance with Section 4.4.

7.3.2.1 If City Engineer determines a method and adjustment in Contract Price under Paragraph 7.3.2, Contractor shall provide, in a form as City Engineer may prescribe, appropriate supporting data

for items submitted under Paragraph 7.3.2. Failure to submit the data within 21 days of request for the data by City Engineer shall constitute waiver of a Claim.

7.3.2.2 Unless otherwise provided in the Contract, costs for the purposes of this Paragraph 7.3.2 are limited to the following:

.1 costs of labor, including labor burden as stated below for social security, unemployment insurance, customary and usual fringe benefits required by agreement or custom, and Workers' Compensation insurance;

.1 the maximum labor burden applied to costs of labor for changes in the Work is 55 percent;

.2 costs of materials, supplies, and equipment, including cost of transportation, whether incorporated or consumed;

.3 rental costs of machinery and equipment, exclusive of hand tools, whether rented from Contractor or others, with prior approval of City Engineer;

.4 costs of premiums for Bonds and insurance and permit fees related to the change in the Work;

.5 additional costs of direct supervision of work and field office personnel directly attributable to the change; and

.6 allowances for overhead and profit as stated below.

.1 the maximum allowances for overhead and profit on increases due to Change Orders:

.2 for changes in the Work performed by Contractor and Subcontractors, allowance for overhead and profit are applied to an amount equal to cost of all additions less cost of all deletions to the Work. Allowance for overhead to Contractor and first tier Subcontractors on changes performed by Subcontractors are applied to an amount equal to the sum of all increases to the Work by applicable Subcontractors.

7.3.3 If the City deletes or makes a change, which results in a net decrease in Contract Price, the City is entitled to a credit calculated in accordance with Paragraphs 7.3.1 and 7.3.2 and Subparagraphs 7.3.2.1, and 7.3.2.2.1 through 7.3.2.2.5. When both additions and credits covering related work or substitutions are involved in a change, allowance for overhead and profit is figured on the basis of a net increase, if any, with respect to that change in accordance with Subparagraph 7.3.2.2.6.

7.3.4 When Contractor agrees with the determination made by City Engineer concerning adjustments in Contract Price and Contract Time, or the Parties otherwise reach agreement upon the adjustments, the agreement will be immediately recorded by Change Order.

7.4 *MINOR CHANGES IN THE WORK*

7.4.1 A Minor Change in Work is binding on the Parties. Contractor shall acknowledge, in a written form acceptable to City Engineer, that there is no change in Contract Time or Contract Price and shall carry out the written orders promptly.

ARTICLE 8 - TIME

8.1 *PROGRESS AND COMPLETION*

8.1.1 Time is of the essence in the Contract. By executing the Contract, Contractor agrees that Contract Time is a reasonable period for performing the Work.

8.1.2 *Computation of Time:* In computing any period of time prescribed or allowed by the General Conditions, the day of the act, event, or default after which designated period of time begins to run is not to be included. Last day of the period so computed is to be included, unless it is a Sunday or Legal Holiday, in which event the period runs until end of next day which is not a Sunday or Legal Holiday. Sundays and Legal Holidays are considered to be days and are to be included in all other time computations relative to Contract Time.

8.1.3 Contractor may not commence the Work prior to the effective date of insurance and Bonds required by Article 11.

8.1.4 Contractor shall proceed expeditiously and without interruption, with adequate forces, and shall achieve Date of Substantial Completion within Contract Time.

8.1.5 Should progress of the Work fall behind construction schedule, except for reasons stated in Paragraph 8.2.1, Contractor shall promptly submit at the request of Project Manager, updated construction schedule to City Engineer for approval. Contractor's failure to submit updated schedule may, at City Engineer's discretion, constitute a material

breach of the Contract. Contractor shall take action necessary to restore progress by working the hours, including night shifts and lawful overtime operations as necessary, to achieve Date of Substantial Completion within Contract Time.

8.1.6 Except in connection with safety or protection of persons or the Work or property at the site or adjacent to the site, and except as otherwise indicated in the Contract, all the Work at the site will be performed Monday through Saturday between the hours of 7:00 a.m. and 7:00 p.m. Contractor may not perform work between 7:00 p.m. and 7:00 a.m., on a Sunday, or on a Legal Holiday, without giving City Engineer 24-hour prior written notice and receiving written consent of City Engineer.

8.2 *DELAYS AND EXTENSIONS OF TIME*

8.2.1 Contractor may request extension of Contract Time for a delay in performance of work that arises from causes beyond control and without fault or negligence of Contractor. Examples of these causes are:

.1 acts of God or of the public enemy,
.2 acts of government in its sovereign capacity,
.3 fires,
.4 floods,
.5 epidemics,
.6 quarantine restrictions,
.7 strikes,
.8 freight embargoes,
.9 unusually severe weather; and
.10 discovery of Pollutants or Pollutant Facilities at the site.

8.2.2 For any reason other than those listed in Section 4.3.6.2, if the Contractor's work is delayed in any manner or respect, the Contractor shall have no claim for damages and shall have no right of additional compensation from the City by reason of any delay or increased expense to the Contractor's work, except for an extension of time as provided in this provision.

8.2.3 Contractor may request an extension of Contract Time for delay only if:

.1 delay is caused by failure of Subcontractor or Supplier to perform or make progress; and
.2 cause of failure is beyond control of both Contractor and Subcontractor or Supplier.

8.2.4 Claims relating to Contract Time must be made in accordance with Paragraph 4.3.7.

8.2.5 Claims for extending or shortening Contract Time are based on written notice promptly delivered by the Party making Claim to other Party. Claim must accurately describe occurrence generating Claim, and a statement of probable effect on progress of the Work.

8.2.6 Claims for extension of Contract Time are considered only when a Claim is filed within the time limits stated in Paragraph 4.3.3.

.1 Notwithstanding paragraph 4.3.3, an extension of time for delays under this paragraph may be granted only upon written application by the Contractor within 48 hours from the claimed delay.

8.2.7 Written notice of Claim must be accompanied by claimant's written statement that adjustment claimed is entire adjustment to which claimant is entitled as a result of the occurrence of the event. When the Parties cannot agree, Claims for adjustment in Contract Time are determined by City Engineer in accordance with Section 4.4.

8.2.8 Adjustments to Contract Time are accomplished by Change Order.

ARTICLE 9 - PAYMENTS AND COMPLETION

9.1 *UNIT PRICE WORK*

9.1.1 Where the Contract provides that all or part of the Work is based on Unit Prices, the Original Contract Price includes, for all Unit Price work, an amount equal to the sum of Unit Prices times Unit Price Quantities for each separately identified item of Unit Price work.

9.1.2 Each Unit Price includes an amount to cover Contractor's overhead and profit for each separately identified item.

9.1.3 The Contractor may not make a Claim against the City for excess or deficiency in Unit Price Quantities provided in the Contract, except as provided in Subparagraph 9.1.4.1. Payment at the prices stated in the Contract is in full for the completed work. Contractor is not entitled to additional payment for materials, supplies, labor, tools, machinery and all other expenditures incidental to satisfactory completion of the Work.

9.1.4 City Engineer may increase or decrease quantities of the Work within limitations

stated in Paragraph 7.1.2. Contractor is entitled to payment for actual quantities of items provided at Unit Prices set forth in the Contract.

9.1.5 Where the final quantity of work performed by Contractor on Major Unit Price Work item differs by more than 25 percent from quantity of the item stated in the Contract, a Party may request an adjustment in Unit Price, for the portion that differs by more than 25 percent, by a Change Order under Section 7.3.

9.2 *ESTIMATES FOR PAYMENT, UNIT PRICE WORK*

9.2.1 Following the day of each month indicated in the Contract, Project Manager will prepare a Certificate for Payment for the preceding monthly period based on estimated units of work completed. Prior to preparing Certificate of Payment, Contractor shall have submitted to City Engineer on a form approved by the Director of the Mayor's Office of Business Opportunity, evidence satisfactory to the City Engineer of payments made to Subcontractors and Suppliers for the month preceding the month for which the Certificate for Payment is prepared.

9.2.2 Before final completion, City Engineer will review and confirm with Contractor the actual final installed Unit Price quantities. City Engineer's determination of actual final installed Unit Price quantities will be included in the final Certificate for Payment and any previous underpayments and overpayments will be reconciled with the actual final Unit Price quantities. Contractor shall file written notice of intent to appeal, if any, City Engineer's determination within 10 days of receipt of final Certificate for Payment. Upon expiration of the 10-day period, City Engineer's decision is final and binding on the Parties. If Contractor submits notice within the 10-day period, Contractor shall submit a Claim in accordance with Section 4.4.

9.3 *STIPULATED PRICE WORK*

9.3.1 For work contracted on a Stipulated Price basis, 10 days before submittal of first Application for Payment, Contractor shall submit to City Engineer a Schedule of Values allocated to various portions of the Work, prepared in the form and supported by the data as City Engineer may require to substantiate its accuracy. This schedule, as approved by City Engineer, is used as a basis for approval of Contractor's Applications for Payment.

9.4 *APPLICATIONS FOR PAYMENT, STIPULATED PRICE WORK*

9.4.1 For work contracted on a Stipulated Price basis, Contractor shall submit Applications for Payment to City Engineer each month on a form acceptable to City Engineer in accordance with Schedule of Values. Application must indicate percentages of completion of each portion of the Work listed in Schedule of Values as of the end of the period covered by the Application for Payment.

9.4.2 Applications for Payment must be supported by substantiating data as City Engineer may require and must reflect retainages as provided below. Evidence satisfactory to the City Engineer of payments made to Subcontractors and Suppliers for the month preceding the month for which the Application for Payment is submitted must accompany each Application for Payment on a form approved by the Director of Mayor's Office of Business Opportunity. Application must be sworn and notarized.

9.5 *CERTIFICATES FOR PAYMENT*

9.5.1 City Engineer will, within 10 days after the date specified in the Contract for Unit Price work, or upon receipt of Contractor's Application for Payment for Stipulated Price work, issue a Certificate for Payment for work based on amount which City Engineer determines is properly due, with copy to Contractor.

9.5.2 Unless otherwise provided in the Contract, payment for completed work and for properly stored Products is conditioned upon compliance with procedures satisfactory to City Engineer to protect the City's interests. Procedures will include applicable insurance, storage, and transportation to site for materials and equipment stored off-site. Contractor is responsible for maintaining materials and equipment until Date of Substantial Completion.

9.5.3 Contractor shall document its use of Ultra Low Sulfur Diesel Fuel by providing invoices and receipts evidencing Contractor's use.

9.6 *COMPUTATIONS OF CERTIFICATES FOR PAYMENT*

9.6.1 Subject to the provisions of the Contract, the amount of each Certificate for Payment is calculated as follows:

.1 that portion of Contract Price allocated to completed work as determined by:

.1 multiplying the percentage of completion of each portion of the Work listed in the Schedule of

Values by the value of that portion of the Work, or

.2 multiplying Unit Price quantities Installed times the Unit Prices listed in the Contract;

.2 plus progress payments for completed work that has been properly authorized by Modifications;

.3 less retainage of five percent;

.4 plus actual costs, properly substantiated by certified copies of invoices and freight bills, of non-perishable materials and equipment delivered and properly stored, if approved in advance by Project Manager, less 15 percent;

.5 less any previous payments by the City.

9.7 *DECISIONS TO WITHHOLD CERTIFICATION*

9.7.1 City Engineer may decline to certify payment and may withhold payment in whole or in part to the extent reasonably necessary to protect the City if, in City Engineer's opinion, there is reason to believe that:

.1 nonconforming work has not been remedied;

.2 the Work cannot be completed for unpaid balance of Contract Price;

.3 there is damage to the City or another contractor;

.4 the Work will not be completed within Contract Time and that unpaid balance will not be adequate to cover actual and liquidated damages;

.5 probable evidence that third party claims will be filed in court, in arbitration, or otherwise;

.6 Contractor has failed to make payments to Subcontractors or Suppliers for labor, material, or equipment; or

.7 Contractor has persistently failed to carry out work in accordance with the Contract.

.8 Contractor has not paid Subcontractors or Suppliers because of a payment dispute; or

.9 Contractor has failed to provide satisfactory evidence described in Paragraphs 9.2.1, 9.4.2, and 9.8.2.

9.7.2 When the above reasons for withholding certification are removed, certification will be made for amounts previously withheld.

9.7.3 City Engineer may decline to certify payment and may withhold request for payment in whole or in part upon failure of Contractor to submit initial construction schedule or monthly schedule updates, as required in Paragraphs 3.15.1 and 3.15.3.

9.8 *PROGRESS PAYMENTS*

9.8.1 The City will make payment, in an amount certified by City Engineer, within 20 days after City Engineer has issued a Certificate for Payment.

9.8.2 The City has no obligation to pay or to facilitate the payment to a Subcontractor or Supplier, except as may otherwise be required by law. Contractor shall comply with the prompt payment requirements of Chapter 2251 of the Government Code. State law requires payment of Subcontractors and Suppliers by Contractor within 7 calendar days of Contractor's receipt of payment from the City, unless there is a payment dispute between Contractor and a Subcontractor or Supplier evidenced on a form approved by the Director of Mayor's Office of Business Opportunity and submitted to the City Engineer each month with Application for Payment or Estimate for Payment.

9.8.2.1 The City may, upon request and at the discretion of City Engineer, furnish to Subcontractor information regarding percentages of completion or the amounts applied for by Contractor, and action taken thereon by the City because of work done by the Subcontractor.

9.8.2.2 Contractor shall prepare and submit to City Engineer a Certification of Payment to Subcontractors and Suppliers form to be attached to each monthly Estimate for Payment or Application for Payment.

9.8.3 A Certificate for Payment, a progress payment, or partial or entire use or occupancy of the Work by the City, does not constitute acceptance of work which is not in accordance with the Contract.

9.9 *DATE OF SUBSTANTIAL COMPLETION*

9.9.1 When Contractor considers the Work, or a portion thereof designated by City Engineer, to be substantially complete, Contractor shall prepare and submit to Project Manager a comprehensive punch list of items to be completed or corrected. Failure to include an item on the punch list does not

alter the responsibility of Contractor to comply with the Contract.

9.9.1.1 By submitting the punch list to Project Manager, Contractor represents that work on the punch list will be completed within the time provided for in Subparagraph 9.9.4.3.

9.9.2 Upon receipt of Contractor's punch list, Project Manager will inspect the Work, or designated portion thereof, to verify that the punch list contains all items needing completion or correction. If Project Manager's inspection discloses items not on Contractor's punch list, the items must be added to the punch list of items to be completed or corrected. If Project Manager's inspection reveals that Contractor is not yet substantially complete, Contractor shall complete or correct the deficiencies and request another inspection by Project Manager. The City may recover the costs of re-inspection from Contractor.

9.9.3 Prior to City Engineer's issuing a Certificate of Substantial Completion, Contractor shall also provide:

.1 Certificate of Occupancy for new construction, or Certificate of Compliance for remodeled work, as applicable, and

.2 compliance with Texas Accessibility Standards through state inspection of the Work, if required. If Contractor calls for inspection in a timely manner and the inspection is delayed through no fault of Contractor, and City Engineer so confirms, City Engineer may, upon request by Contractor, add the inspection to the punch list in Paragraph 9.9.2 and issue a Certificate of Substantial Completion.

9.9.4 When the Work, or designated portion thereof, is determined by City Engineer to be sufficiently complete in accordance with the Contract so the City can occupy or utilize the Work, or designated portion thereof, for the purpose for which it is intended, City Engineer will prepare a Certificate of Substantial Completion that incorporates the punch list in Paragraph 9.9.2 and establishes:

.1 Date of Substantial Completion;

.2 responsibilities of the Parties for security, maintenance, heating, ventilating and air conditioning, utilities, damage to the Work, and insurance; and

.3 fixed time within which Contractor shall complete all items on punch list of items to be corrected accompanying the certificate.

9.9.5 Warranties required by the Contract shall commence on the Date of Substantial Completion unless otherwise provided by City Engineer in Certificate of Substantial Completion. Warranties may not commence on items not substantially completed.

9.9.6 After Date of Substantial Completion and upon application by Contractor and approval by City Engineer, the City may make payment, reflecting adjustment in retainage, if any, as follows:

.1 with the consent of Surety, the City may increase payment to Contractor to 96 percent of Contract Price, less value of items to be completed and accrued liquidated damages.

9.9.7 Contractor shall complete or correct the items in Paragraph 9.9.2 within the time period set out in the Certificate of Substantial Completion. If Contractor fails to do so, the City may issue a Notice of Noncompliance and proceed according to Section 2.5.

9.10 *PARTIAL OCCUPANCY OR USE*

9.10.1 The City may occupy or use any completed or partially completed portion of the Work at any stage, provided the occupancy or use is consented to by Contractor and Contractor's insurer and authorized by public authorities having jurisdiction over the Work. Consent of Contractor to partial occupancy or use may not be unreasonably withheld.

9.10.2 Immediately prior to the partial occupancy or use, Project Manager and Contractor shall jointly inspect the area to be occupied or portion of the Work to be used to determine and record condition of the Work.

9.10.3 Partial occupancy or use of a portion of the Work does not constitute acceptance of work not in compliance with requirements of the Contract.

9.11 *FINAL COMPLETION AND FINAL PAYMENT*

9.11.1 Contractor shall review the Contract and inspect the Work prior to Contractor notification to City Engineer that the Work is complete and ready for final inspection. Contractor shall submit affidavit that the Work has been inspected and that the Work is complete in accordance with requirements of the Contract.

9.11.2 Project Manager will make final inspection within 15 days after receipt of Contractor's written notice that the Work is ready for final inspection and acceptance. If Project Manager finds the Work has been completed in accordance with the Contract, Contractor shall submit items set out in Paragraph 9.11.4 and, for stipulated price contracts, a final Application for Payment. City Engineer will, within 10 days, issue Certificate of Final Completion stating that to the best of City Engineer's knowledge, information, and belief, the Work has been completed in accordance with the Contract, and will recommend acceptance of the Work by City Council.

9.11.3 Should work be found not in compliance with requirements of the Contract, City Engineer will notify Contractor in writing of items of noncompliance. Upon inspection and acceptance of the corrections by Project Manager, compliance with all procedures of Paragraph 9.11.2, and Contractor's submission of the items set out in Paragraph 9.11.4, the City Engineer will issue Certificate of Final Completion to Contractor as provided in Paragraph 9.11.2.

9.11.4 Contractor shall submit the following items to City Engineer before City Engineer will issue a Certificate of Final Completion:

.1 affidavit that payrolls, invoices for materials and equipment, and other indebtedness of Contractor connected with the Work, less amounts withheld by the City, have been paid or otherwise satisfied. If required by City Engineer, Contractor shall submit further proof including waiver or release of lien or claims from laborers or Suppliers of Products;

.2 certificate evidencing that insurance required by the Contract to remain in force after final payment is currently in effect, will not be canceled or materially changed until at least 30 days written notice has been given to the City;

.3 written statement that Contractor knows of no substantial reason that insurance will not be renewable to cover correction and warranty period required by the Contract;

.4 consent of Surety to final payment; and

.5 copies of record documents, maintenance manuals, tests, inspections, and approvals.

Upon City Engineer's issuance of a Certificate of Final Completion, Contractor may request increase in payment to 99 percent of Contract Price, less accrued liquidated damages.

9.11.5 If Contractor fails to submit required items in Paragraph 9.11.4 within 10 days of Project Manager's inspection of the Work under Paragraph 9.11.2 or Paragraph 9.11.3, City Engineer may, but is not obligated to:

.1 deduct liquidated damages accrued from monies held;

.2 proceed to City Council for acceptance of the Work, minus some or all of the items Contractor fails to submit under Paragraph 9.11.4; and,

.3 upon acceptance by City Council of the portion of the Work completed, make final payment as set out in Paragraph 9.11.8.

9.11.6 If final completion is materially delayed through no fault of Contractor, or by issuance of Change Orders affecting date of final completion, and City Engineer so confirms, the City may, upon application by Contractor and certification by City Engineer, and without terminating the Contract, make payment of balance due for that portion of the Work fully completed and accepted.

9.11.7 If remaining balance due for work not corrected is less than retainage stipulated in the Contract, Contractor shall submit to City Engineer written consent of Surety to payment of balance due for that portion of the Work fully completed and accepted, prior to certification of the payment. The payment is made under terms governing final payment, except that it does not constitute waiver of Claims.

9.11.8 The City will make final payment to Contractor within 30 days after acceptance of the Work by City Council, subject to limitations, if any, as stated in the Contract.

9.11.9 Acceptance of final payment by Contractor shall constitute a waiver of all Claims, whether known or unknown, by Contractor, except those previously made in writing and identified by Contractor as unsettled at time of final Application for Payment.

9.12 *LIQUIDATED DAMAGES*

9.12.1 Contractor, Surety, and the City agree that failure to complete the Work within Contract Time will cause damages to the City and that actual damages from harm are difficult to estimate accurately. Therefore, Contractor, Surety, and the City agree that Contractor and Surety are liable for and shall pay to the City the amount stipulated in

Supplementary Conditions as liquidated damages, and that the amount of damages fixed therein is a reasonable forecast of just compensation for harm to the City resulting from Contractor's failure to complete the Work within Contract Time. The amount stipulated will be paid for each day of delay beyond Contract Time until Date of Substantial Completion.

9.12.2 Contractor shall pay the City an amount equal to $1,200.00 per diesel operating vehicle or piece of motorized equipment per incident of high sulfur diesel fuel usage.

ARTICLE 10 - SAFETY PRECAUTIONS

10.1 *SAFETY PROGRAMS*

10.1.1 Contractor is responsible for initiating, maintaining, and supervising all safety precautions and programs in connection with performance of the Contract. Contractor shall submit a safety program to City Engineer prior to mobilizing for the Work, and is solely responsible for safety, efficiency, and adequacy of ways, means, and methods, and for damage which might result from failure or improper construction, maintenance, or operation performed by Contractor.

10.2 *POLLUTANTS AND POLLUTANT FACILITIES*

10.2.1 If Contractor encounters material on-site which it reasonably believes to be a Pollutant or facilities which it reasonably believes to be a Pollutant Facility, Contractor shall immediately stop work in affected area and immediately notify City Engineer, confirming the notice thereafter in writing.

10.2.2 If City Engineer determines that the material is a Pollutant or facility is a Pollutant Facility, work in affected area may not be resumed except by Modification, and only if the work would not violate applicable laws or regulations.

10.2.3 If City Engineer determines that the material is not a Pollutant or a facility is not a Pollutant Facility, work in affected area will be resumed upon issuance of a Modification.

10.2.4 Contractor is not required to perform, unless authorized by Change Order, work relating to Pollutants or Pollutant Facilities except for that work relating to Pollutants or Pollutant Facilities specified in the Contract.

10.3 *SAFETY OF THE ENVIRONMENT, PERSONS, AND PROPERTY*

10.3.1 Contractor shall take reasonable precautions for safety and shall provide reasonable protection to prevent damage, injury, or loss from all causes, to:

.1 employees performing work on-site, and other persons who may be affected thereby;

.2 work, including Products to be incorporated into the Work, whether in proper storage, under control of Contractor or Subcontractor; and

.3 other property at or adjacent to the site, such as trees, shrubs, lawns, walks, pavements, roadways, structures, utilities, and Underground Facilities not designated for removal or replacement in course of construction.

10.3.2 Contractor shall give notices and comply with applicable laws, ordinances, rules, regulations, and lawful orders of public authorities bearing on safety of persons, property, or environment.

10.3.2.1 Contractor shall comply with requirements of Underground Facility Damage Prevention and Safety Act TEX. UTIL. CODE ANN. Ch. 251 (Vernon Supp. 2002).

10.3.2.2 Contractor shall comply with all safety rules and regulations of the Federal Occupational Health and Safety Act of 1970 and subsequent amendments (OSHA).

10.3.3 Contractor shall erect and maintain, as required by existing conditions and performance of the Contract, reasonable safeguards for safety and protection of persons and property, including posting danger signs and other warnings against hazards, promulgating safety regulations, and notifying owners and users of adjacent sites and utilities.

10.3.4 Contractor shall designate responsible member of Contractor's organization at site whose duty is prevention of accidents. This person will be Contractor's Superintendent unless otherwise designated by Contractor in writing to City Engineer.

10.3.5 Contractor shall prevent windblown dust and may not burn or bury trash debris or waste products on-site. Contractor shall prevent environmental pollution, including but not limited to particulates, gases and noise, as a result of the Work.

10.3.6 When use or storage of hazardous materials or equipment, or unusual methods are necessary for execution of the Work, Contractor shall exercise utmost care and carry on the activities under supervision of properly qualified personnel.

10.3.7 Contractor shall promptly remedy damage and loss to property referred to in Subparagraphs 10.3.1.2 and 10.3.1.3, caused in whole or in part by Contractor, or Subcontractors, which is not covered by insurance required by the Contract. Contractor is not required to remedy damage or loss attributable to the City, Design Consultant, or other contractors.

10.4 *EMERGENCIES*

10.4.1 In emergencies affecting safety of persons or property, Contractor shall act at Contractor's discretion to prevent imminent damage, injury, or loss. Additional compensation or extension of time claimed by Contractor because of emergencies are determined as provided in Article 7.

ARTICLE 11 - INSURANCE AND BONDS

11.1 *GENERAL INSURANCE REQUIREMENTS*

11.1.1 With no intent to limit Contractor's liability under indemnification provisions set forth in Paragraphs 3.25 and 3.26, Contractor shall provide and maintain in full force and effect during term of the Contract and all extensions and amendments thereto, at least the following insurance and available limits of liability.

11.1.2 If any of the following insurance is written as "claims made" coverage and the City is required to be carried as additional insured, then Contractor's insurance shall include a two-year extended discovery period after last date that Contractor provides any work under the Contract.

11.1.3 Aggregate amounts of coverage, for purposes of the Contract, are agreed to be amounts of coverage available during fixed 12-month policy period.

11.2 *INSURANCE TO BE PROVIDED BY CONTRACTOR*

11.2.1 *Risks and Limits of Liability:* Contractor shall provide at a minimum insurance coverage and limits of liability set out in Table 1.

11.2.1.1 If Limit of Liability for Excess Coverage is $2,000,000 or more, Limit of Liability for Employer's Liability may be reduced to $500,000.

11.2.2 *Form of Policies:* Insurance may be in one or more policies of insurance, form of which is subject to approval by City Engineer. It is agreed, however, that nothing City Engineer does or fails to do with regard to insurance policies relieves Contractor from its duties to provide required coverage and City Engineer's actions or inactions will never be construed as waiving the City's rights.

11.2.3 *Issuers of Policies:* Issuer of any policy shall have:

.1 a Certificate of Authority to transact business in Texas, or

.2 have a Best's rating of at least B+ and a Best's Financial Size Category of Class VI or better, according to the most current edition of Best's Key Rating Guide, and the issuer must be an eligible nonadmitted insurer in the State of Texas.

Each insurer is subject to approval by City Engineer in City Engineer's sole discretion as to conformance with these requirements, pursuant to Paragraph 11.2.2.

11.2.4 *Insured Parties:* Each policy, except those for Workers' Compensation and Owner's and Contractor's Protective Liability, must name the City, its officers, agents, and employees as additional insured parties on original policy and all renewals or replacements during term of the Contract. The City's status as additional insured under Contractor's insurance does not extend to instances of sole negligence of the City unmixed with any fault of Contractor.

11.2.5 *Deductibles:* Contractor assumes and bears any claims or losses to extent of deductible amounts and waives any claim it may ever have for same against the City, its officers, agents, or employees.

11.2.6 *Cancellation:* Contractor shall notify the Director in writing 30 days prior to any cancellation or material change to Contractor's insurance coverage. Within the 30 day period, Contractor shall provide other suitable policies in lieu of those about to be canceled or nonrenewed so as to maintain in effect the required coverage. If Contractor does not comply with this requirement, the City Engineer, at his or her sole discretion, may:

.1 immediately suspend Contractor from any further performance under this Contract and begin procedures to terminate for default, or

.2 purchase the required insurance with City funds and deduct the cost of the premiums from amounts due to Contractor under this Contract.

11.2.7 *Subrogation:* Each policy except Owner's and Contractor's Protective Liability must contain endorsement to the effect that issuer waives any claim or right in nature of subrogation to recover against the City, its officers, agents, or employees.

11.2.8 *Endorsement of Primary Insurance:* Each policy, except Workers' Compensation policies, must contain an endorsement that the policy is primary insurance to any other insurance available to additional insured with respect to claims arising hereunder.

11.2.9 *Liability for Premium:* Contractor is solely responsible for payment of all insurance premium requirements hereunder and the City is not obligated to pay any premiums.

11.2.10 *Additional Requirements for Workers' Compensation Insurance Coverage:* Contractor shall, in addition to meeting the obligations set forth in Table 1, maintain throughout the term of the Contract Workers' Compensation coverage as required by statute, and Contractor shall specifically comply with requirements set forth in Paragraph 11.2.10. The definitions set out below shall apply only for purposes of this Paragraph 11.2.10.

11.2.10.1 Definitions:

.1 *Certificate of Coverage:* A copy of certificate of insurance, or coverage agreement (TWCC-81, TWCC-82, TWCC-83, or TWCC-84), showing statutory Workers' Compensation insurance coverage for Contractor's, Subcontractor's, or Supplier's employees providing services for the duration of the Contract.

.2 *Duration of the Work:* Includes the time from Date of Commencement of the Work until Contractor's work under the Contract has been completed and accepted by City Council.

.3 *Persons providing services for the Work (Subcontractor in Texas Labor Code § 406.096):* includes all persons or entities performing all or part of services Contractor has undertaken to perform on the Work, regardless of whether that person contracted directly with Contractor and regardless of whether that person has employees. This includes, without limitation, independent contractors, subcontractors, leasing companies, motor carriers, owner-operators, employees of the entity, or employees of entity which furnishes persons to provide services on the Work. Services include, without limitation, providing, hauling, or delivering equipment or materials, or providing labor, transportation, or other service related to the Work. Services do not include activities unrelated to the Work, such as food/beverage vendors, office supply deliveries, and delivery of portable toilets.

11.2.10.2 Contractor shall provide coverage, based on proper reporting of classification codes and payroll amounts and filing of coverage agreements, which meets the statutory requirements of TEX. LAB. CODE ANN., Section 401.011(44) for employees of Contractor providing services on the Work, for duration of the Work.

11.2.10.3 Contractor shall provide a Certificate of Coverage to the City prior to being awarded the Contract.

11.2.10.4 If coverage period shown on Contractor's original Certificate of Coverage ends during duration of the Work, Contractor shall file new Certificate of Coverage with the City showing that coverage has been extended.

11.2.10.5 Contractor shall obtain from each person providing services on the Work, and provide to City Engineer:

.1 Certificate of Coverage, prior to that person beginning work on the Work, so the City will have on file Certificates of Coverage showing coverage for all persons providing services on the Work; and

.2 no later than seven days after receipt by Contractor, new Certificate of Coverage showing extension of coverage, if coverage period shown on current Certificate of Coverage ends during the duration of the Work.

11.2.10.6 Contractor shall retain all required Certificates of Coverage for the duration of the Work and for one year thereafter.

11.2.10.7 Contractor shall notify City Engineer in writing by certified mail or personal delivery, within 10 days after Contractor knew or should have known, of

any change that materially affects provision of coverage of any person providing services on the Work.

11.2.10.8 Contractor shall post on-site a notice, in text, form and manner prescribed by Texas Workers' Compensation Commission, informing all persons providing services on the Work that they are required to be covered, and stating how person may verify coverage and report lack of coverage.

11.2.10.9 Contractor shall contractually require each person with whom it contracts to provide services on the Work to:

.1 provide coverage, based on proper reporting of classification codes, payroll amounts and filing of any coverage agreements, which meets statutory requirements of TEX. LAB. CODE ANN., Section 401.011(44) for all its employees providing services on the Work, for the duration of the Work;

.2 provide to Contractor, prior to that person's beginning work on the Work, a Certificate of Coverage showing that coverage is being provided for all employees of the person providing services on the Work, for the duration of the Work;

.3 provide Contractor, prior to the end of the coverage period, a new Certificate of Coverage showing extension of coverage, if the coverage period shown on the current Certificate of Coverage ends during the duration of the Work;

.4 obtain from each other person with whom it contracts, and provide to Contractor: (1) Certificate of Coverage, prior to other person's beginning work on the Work; and (2) new Certificate of Coverage showing extension of coverage, prior to end of coverage period, if coverage period shown on the current Certificate of Coverage ends during duration of the Work.

.5 retain all required Certificates of Coverage on file for the duration of the Work and for one year thereafter;

.6 notify City Engineer in writing by certified mail or personal delivery within 10 days after person knew, or should have known, of change that materially affects provision of coverage of any person providing services on the Work; and

.7 contractually require each person with whom it contracts to perform as required by Paragraphs 11.2.10.1 through 11.2.10.7, with Certificates of Coverage to be provided to person for whom they are providing services.

11.2.10.10 By signing the Contract or providing or causing to be provided a Certificate of Coverage, Contractor is representing to the City that all employees of Contractor who will provide services on the Work will be covered by Workers' Compensation coverage for the duration of the Work, that coverage will be based on proper reporting of classification codes and payroll amounts, and that all coverage agreements will be filed with appropriate insurance carrier. Contractor is not allowed to self-insure Workers' Compensation. Contractor may be subject to administrative penalties, criminal penalties, civil penalties, or other civil actions for providing false or misleading information.

11.2.10.11 Contractor's failure to comply with Paragraph 11.2.10 is a breach of the Contract by Contractor, which entitles the City to declare the Contract void if Contractor does not remedy breach within 10 days after receipt of notice of breach from City Engineer.

11.2.11 *Subcontractor Insurance Requirements:* Contractor shall require Subcontractors and Suppliers to obtain Commercial General Liability, Workers' Compensation, Employer's Liability and Automobile Liability coverage that meets all the requirements of Paragraph 11.2. The amount must be commensurate with the amount of the subcontract, but not less than $500,000 per occurrence. Contractor shall require all Subcontractors with whom it contracts directly, whose subcontracts exceed $100,000, to provide proof of Commercial General Liability and Automobile Liability insurance coverage meeting the above requirements. Contractor shall comply with all requirements set out under Paragraph 11.2.10 as to Workers' Compensation Insurance for all Subcontractors and Suppliers.

TABLE 1
REQUIRED COVERAGE

(Coverage)	(Limit of Liability)
.1 Workers' Compensation	Statutory Limits for Workers' Compensation
.2 Employer's Liability	Bodily Injury by Accident $1,000,000 (each accident) Bodily Injury by Disease $1,000,000 (policy limit) Bodily Injury by Disease $1,000,000 (each employee)
.3 Commercial General Liability: Including Contractor's Protective, Broad Form Property Damage, Contractual Liability, Explosion, Underground and Collapse, Bodily Injury, Personal Injury, Products, and Completed Operations (for a period of one year following completion of the Work).	Combined single limit of $1,000,000 (each occurrence), subject to general aggregate of $2,000,000; Products and Completed Operations $1,000,000 aggregate.
.4 Owner's and Contractor's Protective Liability	$1,000,000 combined single limit each Occurrence/ aggregate
.5 Installation Floater (Unless alternative coverage approved by City Attorney)	Value of stored material or equipment, listed on Certificates of Payments, but not yet incorporated into the Work
.6 Automobile Liability Insurance: (For automobiles furnished by Contractor in course of his performance under the Contract, including Owned, Non-owned, and Hired Auto coverage)	$1,000,000 combined single limit each occurrence for (1) Any Auto or (2) All Owned, Hired, and Non-Owned Autos
.7 Excess Coverage	$1,000,000 each occurrence/combined aggregate in excess of limits specified for Employer's Liability, Commercial General Liability, and Automobile Liability
Defense costs are excluded from face amount of policy. Aggregate Limits are per 12-month policy period unless otherwise indicated.	

11.3 *PROOF OF INSURANCE*

11.3.1 Prior to commencing services and at time during the term of the Contract, Contractor shall furnish City Engineer with Certificates of Insurance, along with Affidavit from Contractor confirming that Certificate accurately reflects insurance coverage that is available during term of the Contract. If requested in writing by City Engineer, Contractor shall furnish City Engineer with certified copies of Contractor's actual insurance policies. Failure of Contractor to provide certified copies, as requested, may be deemed, at City Engineer's or City Attorney's discretion, a material breach of the Contract.

11.3.2 Notwithstanding the proof of insurance requirements, Contractor shall continuously maintain in effect required insurance coverage set forth in Paragraph 11.2. Failure of Contractor to comply with this requirement does constitute a material breach by Contractor allowing the City, at its option, to immediately suspend or terminate work, or exercise any other remedy allowed under the Contract. Contractor agrees that the City has not waived or is not estopped to assert a material breach of the Contract because of any acts or omissions by the City regarding its review or non-review of insurance documents provided by Contractor, its agents, employees, or assigns.

11.3.3 Contractor shall provide updated certificates of insurance to the Director upon request. The Contractor shall be responsible for delivering a current certificate of insurance in the proper form to the Director as long as Contractor is required to furnish insurance coverage under Paragraph 11.2.

11.3.4 Every certificate of insurance Contractor delivers in connection with this Contract shall

.1 be less than 12 months old;

.2 include all pertinent identification information for the Insurer, including the company name and address, policy number, NAIC number or AMB number, and authorized signature;

.3 include in the Certificate Holder Box the Project name and reference numbers, contractor's email address, and indicates the name and address of the Project Manager;

.4 include the Contractor's email address in the Certificate Holder Box;

.5 include the Project reference numbers on the City address so the Project reference number is visible in the envelope window; and

.6 be appropriately marked to accurately identify all coverages and limits of the policy, effective and expiration dates, and waivers of subrogation in favor of the City for Commercial General Liability, Automobile Liability, and Worker's Compensation/Employers' Liability.

11.4 *PERFORMANCE AND PAYMENT BONDS*

11.4.1 For Contracts over the value of $25,000, Contractor shall provide Bonds on the City's standard forms covering faithful performance of the Contract and payment of obligations arising thereunder as required in the Contract pursuant to Chapter 2253 of the Government Code. The Bonds must be for 100 percent of Original Contract Price and in accordance with conditions stated on standard City Performance and Payment Bond and Statutory Payment Bond forms. Bonds may be obtained from Contractor's usual source and cost for the Bonds are included in Contract Price.

11.5 *MAINTENANCE BONDS*

11.5.1 *One-year Maintenance Bond:* Contractor shall provide Bond on standard City One-year Maintenance Bond form, providing for Contractor's correction, replacement, or restoration of any portion of the Work which is found to be not in compliance with requirements of the Contract during one-year correction period required in Paragraph 12.2. The Maintenance Bond must be for 100 percent of the Original Contract Price.

11.6 *SURETY*

11.6.1 A Bond that is given or tendered to the City pursuant to the Contract must be executed by a surety company that is authorized and admitted to write surety Bonds in the State of Texas.

11.6.2 If a Bond is given or tendered to the City pursuant to the Contract in an amount greater than 10 percent of Surety's capital and surplus, Surety shall provide certification that Surety has reinsured that portion of the risk that exceeds 10 percent of Surety's capital and surplus. The reinsurance must be with one or more reinsurers who are duly authorized, accredited, or trusted to do business in the State of Texas. The amount reinsured by reinsurer may not exceed 10 percent of reinsurer's capital and surplus. The amount of allowed capital and surplus must be based on information received from State Board of Insurance.

11.6.3 If the amount of a Bond is greater than $100,000, Surety shall:

.1 also hold certificate of authority from the United States Secretary of Treasury to qualify as surety on obligations permitted or required under federal law; or,

.2 Surety may obtain reinsurance for any liability in excess of $100,000 from reinsurer that is authorized and admitted as a reinsurer in the State of Texas and is the holder of a certificate of authority from the United States Secretary of the Treasury to qualify as surety or reinsurer on obligations permitted or required under federal law.

11.6.4 Determination of whether Surety on the Bond or the reinsurer holds a certificate of authority from the United States Secretary of the Treasury is based on information published in Federal Register covering the date on which Bond was executed.

11.6.5 Each Bond given or tendered to the City pursuant to the Contract must be on City forms with no changes made by Contractor or Surety, and must be dated, executed, and accompanied by power of attorney stating that the attorney in fact executing such the bond has requisite authority to execute such Bond. The Bonds must be dated and must be no more than 30 days old.

11.6.6 Surety shall designate in its Bond, power of attorney, or written notice to the City, an agent resident in Harris County to whom any requisite notices may be delivered and on whom service of process may be had in matters arising out of the suretyship.

11.6.7 Contractor shall furnish information to a payment bond beneficiary as required by TEX. GOV'T CODE ANN. CH. 2253.

11.7 *DELIVERY OF BONDS*

11.7.1 Contractor shall deliver required Bonds to the City within time limits stated in Notice of Intent to Award and prior to Date of Commencement of the Work.

ARTICLE 12 - UNCOVERING AND CORRECTION OF THE WORK

12.1 *UNCOVERING OF THE WORK*

12.1.1 If a portion of the Work has been covered which City Engineer has not specifically requested to observe prior to its being covered, City Engineer may request to see such work and it must be uncovered by Contractor. If such work is in accordance with the Contract, the costs of uncovering and covering such work are charged to the City by Change Order. If such work is not in accordance with the Contract, Contractor shall pay for uncovering and shall correct the nonconforming Work promptly after receipt of Notice of Noncompliance to do so.

12.2 *CORRECTION OF THE WORK*

12.2.1 Contractor shall promptly correct or remove work rejected by City Engineer or work failing to conform to requirements of the Contract, whether observed before or after Date of Substantial Completion and whether fabricated, Installed, or completed.

12.2.2 Contractor bears costs of correcting the rejected or nonconforming work including additional testing and inspections, and compensation for Design Consultant's services and expenses made necessary thereby.

12.2.3 If within one year after Date of Substantial Completion, or after date for commencement of warranties established under Paragraph 9.9.5 or by other applicable special warranty required by the Contract, whichever is later in time, any of the Work is found not to be in accordance with the requirements of the Contract, Contractor shall correct such work promptly after receipt of Notice of Noncompliance to do so.

12.2.4 One-year correction period for portions of the Work completed after Date of Substantial Completion will begin on the date of acceptance of that portion of the Work. This obligation under this Paragraph survives acceptance of the Work under the Contract and termination of the Contract.

12.2.5 The one-year correction period does not establish a duration for the Contractor's general warranty under Paragraph 3.12. The City retains the right to recover damages from the Contractor as long as may be permitted by the applicable statute of limitations.

12.2.6 If Contractor does not proceed with correction of the nonconforming work within time fixed by Notice of Noncompliance, the City may correct nonconforming work or remove nonconforming work and store salvageable Products at Contractor's expense. Contractor shall pay the costs of correction of nonconforming work and removal and storage of salvageable Products to the City. If Contractor does not pay costs of the correction or removal and storage within 10 days after written notice, the City may sell the Products at auction or at private sale. The City will account for proceeds thereof after deducting costs and damages that would have been borne by Contractor, including compensation for services of Design Consultant and necessary expenses. If the proceeds of sale do not cover costs which Contractor should have borne, Contractor shall pay the value of the deficiency to the City.

12.2.7 Contractor bears cost of correcting work originally installed by Contractor, the City, or by separate contractors and damaged by Contractor's correction or removal of Contractor's work.

12.3 *ACCEPTANCE OF NONCONFORMING WORK*

12.3.1 If City Engineer prefers to accept work which is not in accordance with requirements of the Contract, City Engineer may do so only by issuance of Change Order, instead of requiring its removal and correction. City Engineer will determine Contract Price reduction. The reduction will become effective even if final payment has been made.

ARTICLE 13 - MISCELLANEOUS PROVISIONS

13.1 *GOVERNING LAWS*

13.1.1 The Contract is subject to the laws of the State of Texas, the City Charter and Ordinances, the laws of the federal government of the United States, and all rules and regulations of any regulatory body or officer having jurisdiction.

13.1.2 Venue for any litigation relating to the Contract is Harris County, Texas.

13.2 *SUCCESSORS*

13.2.1 The Contract binds and benefits the Parties and their legal successors and permitted assigns; however, this Paragraph 13.2.1 does not alter the restrictions on assignment and disposal of assets set out in Paragraph 13.3.1. The Contract does not create any personal liability on the part of any officer or agent of the City.

13.3 *BUSINESS STRUCTURE AND ASSIGNMENTS*

13.3.1 Contractor may not assign the Contract at law or otherwise, or dispose of all or substantially all of its assets without City Engineer's prior written consent. Nothing in this Section, however, prevents the assignment of accounts receivable or the creation of a security interest as described in §9.406 of the Texas Business & Commerce Code. In the case of such an assignment, Contractor shall immediately furnish the City with proof of the assignment and the name, telephone number, and address of the assignee and a clear identification of the fees to be paid to the assignee.

13.3.2 Any series, as defined by the TEX. BUS. ORG. CODE ANN., affiliate, subsidiary, or successor to which Contractor assigns or transfers assets shall join in privity and be jointly and severally liable under this Contract.

13.4 *WRITTEN NOTICE*

13.4.1 All notices required or permitted by the Contract must be in writing and must be effected by hand delivery; registered or certified mail, return receipt requested; or facsimile with confirmation copy mailed to receiving Party. Notice is sufficient if made or addressed with proper postage to the address stated in the Agreement for each Party ("Notice Address") or faxed to the facsimile number stated in the Agreement for each Party. The notice is deemed delivered on the earlier of:

.1 the date the Notice is actually received;
.2 the third day following deposit in a United States Postal Service post office or receptacle; or
.3 the date the facsimile is sent unless the facsimile is sent after 5:00 p.m. local time of the recipient and then it is deemed received on the following day.

Any Party may change its Notice Address or facsimile number at any time by giving written notice of the change to the other Party in the manner provided for in this Paragraph at least 15 days prior to the date the change is affected.

13.5 *RIGHTS AND REMEDIES*

13.5.1 Duties and obligations imposed by the Contract and rights and remedies available thereunder are in addition to and not a limitation of duties, obligations, rights, and remedies otherwise imposed or available by law.

13.5.2 No act or failure to act by the City or Contractor is a waiver of rights or duties afforded them under the Contract, nor is the act or failure to act constitute approval of or acquiescence in a breach of the Contract. No waiver, approval or acquiescence is binding unless in writing and, in the case of the City, signed by City Engineer.

13.6 *TESTS AND INSPECTIONS*

13.6.1 Contractor shall give City Engineer, Construction Manager, and Design Consultant timely notice of the time and place where tests and inspections are to be made. Contractor shall cooperate with inspection and testing personnel to facilitate required inspections or tests.

13.6.2 The City will employ and pay for services of an independent testing laboratory to perform inspections or acceptance tests required by the Contract except:

.1 inspections or tests covered by Paragraph 13.6.3;
.2 those otherwise specifically provided in the Contract; or
.3 costs incurred in connection with tests or inspections conducted pursuant to Paragraph 12.2.2.

13.6.3 Contractor is responsible for and shall pay all costs in connection with inspection or testing required in connection with City Engineer's acceptance of a Product to be incorporated into the Work, or of materials, mix designs, or equipment submitted for approval prior to Contractor's purchase thereof for incorporation into the Work.

13.6.4 Neither observations by the City, Construction Manager, or Design Consultant, nor inspections, tests, or approvals by others, relieves Contractor from Contractor's obligations to perform the Work in accordance with the Contract.

13.7 *INTEREST*

13.7.1 No interest will accrue on late payments by the City except as provided under Chapter 2251 of the Government Code.

13.8 *PARTIES IN INTEREST*

13.8.1 The Contract does not bestow any rights upon any third party, but binds and benefits the Parties only.

13.9 *ENTIRE CONTRACT*

13.9.1 The Contract merges the prior negotiations and understandings of the Parties and embodies the entire agreement of the Parties. No other agreements, assurances, conditions, covenants, express or implied, or other terms of any kind, exist between the Parties regarding the Contract.

13.10 *WRITTEN AMENDMENT*

13.10.1 Changes to the Contract that cannot be effected by Modifications, must be made by written amendment, which will not be effective until approved by City Council.

13.11 *COMPLIANCE WITH LAWS*

13.11.1 Contractor shall comply with the Americans with Disabilities Act of 1990 as amended (ADA) and Texas Architectural Barriers Act and all regulations relating to either statute.

13.11.2 Contractor shall comply with all applicable federal, state, and city laws, rules and regulations.

13.12 *SEVERABILITY*

13.12.1 If any part of the Contract is for any reason found to be unenforceable, all other parts remain enforceable to the extent permitted by law.

ARTICLE 14 - TERMINATION OR SUSPENSION OF THE CONTRACT

14.1 *TERMINATION BY THE CITY FOR CAUSE*

14.1.1 Each of the following acts or omissions of Contractor or occurrences shall constitute an "Event of Default" under the Contract:

.1 Contractor refuses or fails to supply enough properly skilled workers or proper Products;

.2 Contractor disregards laws, ordinances, rules, regulations, or orders of a public authority having jurisdiction;

.3 Contractor is guilty of material breach of any duty or obligation of Contractor under the Contract;

.4 Contractor has had any other contract with the City terminated for cause at any time subsequent to the effective date of the Contract as set out in the Agreement; or

.5 Contractor fails to utilize Ultra Low Sulfur Diesel Fuel, as required in Paragraph 3.9.1.1.

14.1.2 If an Event of Default occurs, City Engineer may, at his option and without prejudice to any other rights or remedies which the City may have, deliver a written notice to Contractor and Surety describing the Event of Default and giving the Contractor 10 days to cure the Event of Default. If after the cure period, Contractor has failed or refused to cure the Event of Default, then City Engineer may deliver a second written notice to Contractor giving notice of the termination of the Contract or of the termination of Contractor's performance under the Contract ("Notice of Termination"). If City Engineer issues a Notice of Termination, then City Engineer may, subject to any prior rights of Surety and any other rights of the City under the Contract or at law:

.1 request that Surety complete the Work; or

.2 take possession of the site and all materials, equipment, tools, and construction equipment and machinery on the site owned by Contractor; and

.3 finish the Work by whatever reasonable method City Engineer may deem expedient.

14.1.3 After Contractor's receipt of a Notice of Termination, and except as otherwise directed in writing by City Engineer, Contractor shall:

.1 stop the Work on the date and to the extent specified in the Notice of Termination;

.2 place no further orders or subcontracts for Products or services;

.3 terminate all orders and subcontracts to the extent that they relate to performance of work terminated;

.4 assign to the City, in the manner, at the times, and to the extent directed by City Engineer, all rights, title, and interest of Contractor, under the terminated supply orders and subcontracts. The City may settle or pay claims arising out of termination of the orders and subcontracts;

.5 settle all outstanding liabilities and all claims arising out of the termination of supply orders and subcontracts with approval of City Engineer;

.6 take action as may be necessary, or as City Engineer may direct, for protection and preservation of property related to the Work that is in possession of Contractor, and in which the City has or may acquire an interest; and

.7 secure the Work in a safe state before leaving the site, providing any necessary safety measures, shoring, or other devices.

14.1.4 If the City terminates the Contract or terminates Contractor's performance under the Contract for any one or more of the reasons stated in Paragraph 14.1.1, Contractor may not receive any further payment until the Work is complete, subject to Paragraph 14.1.5.

14.1.5 If the unpaid balance of Contract Price exceeds the costs of finishing the Work, including liquidated damages and other amounts due under the Contract, the balance will be paid to Contractor. If the costs of finishing the Work exceed the unpaid balance, Contractor shall, within 10 days of receipt of written notice setting out the amount of the excess costs, pay the difference to the City. The amount to be paid to Contractor or the City will be certified by City Engineer in writing, and this obligation for payment shall survive termination of the Contract or termination of Contractor's performance under the Contract. Termination of the Contractor for cause shall not relieve the Surety from its obligation to complete the project.

14.2 *TERMINATION BY THE CITY FOR CONVENIENCE*

14.2.1 City Engineer may, without cause and without prejudice to other rights or remedies of the City, give Contractor and Surety a Notice of Termination with a seven days written notice.

14.2.2 After receipt of the Notice of Termination, and except as otherwise approved by City Engineer, Contractor shall conform to requirements of Paragraph 14.1.3.

14.2.3 After receipt of the Notice of Termination, Contractor shall submit to the City its termination Claim, in forms required by City Engineer. The Claim will be submitted to the City promptly, but no later than six months from the effective date of termination, unless one or more extensions are granted by City Engineer in writing. If Contractor fails to submit its termination Claim within the time allowed, in accordance with Paragraph 14.2.4, City Engineer will determine, on the basis of available information, the amount, if any, due to Contractor because of termination, and City Engineer's determination is final and binding on the Parties. The City will then pay to Contractor the amount so determined.

14.2.4 City Engineer will determine, on the basis of information available to City Engineer, the amount due, if any, to Contractor for the termination as follows:

.1 Contract Price for all work performed in accordance with the Contract up to the date of termination determined in the manner prescribed for monthly payments in Article 9, except no retainage is withheld by the City either for payment determined by percentage of completion or for materials and equipment delivered to the site, in storage or in transit.

.2 Reasonable termination expenses, including costs for settling and paying Subcontractor and Supplier claims arising out of termination of the Work, reasonable cost of preservation and protection of the City's property after termination, if required, and the cost of Claim preparation. Termination expenses do not include field or central office overhead, salaries of employees of Contractor, or litigation costs, including attorneys' fees.

No amount is allowed for anticipated profit or central office overhead on uncompleted work, or any cost or lost profit for other business of Contractor alleged to be damaged by the termination.

14.2.5 Contractor shall promptly remove from the site any construction equipment, tools, and temporary facilities, except the temporary facilities which City Engineer may wish to purchase and retain.

14.2.6 Contractor shall cooperate with City Engineer during the transition period.

14.2.7 The City will take possession of the Work and materials delivered to the site, in storage, or in transit, as of date or dates specified in the Notice of Termination, and is responsible for maintenance, utilities, security, and insurance, as stated in Notice of Termination.

14.3 *SUSPENSION BY THE CITY FOR CONVENIENCE*

14.3.1 City Engineer may, without cause, after giving Contractor and Surety 24-hour prior written notice, order Contractor to suspend, delay, or

interrupt the Work in whole or in part for a period of time as City Engineer may determine.

14.3.2 An adjustment will be made in Contract Time equivalent to the time of suspension.

14.3.3 Adjustment will be made to Contract Price for increases in the cost of performance of the Work, including profit on increased cost of performance caused by suspension, delay, or interruption of the Work in accordance with Paragraph 7.3. No adjustment will be made to the extent that:

.1 performance was, or would have been, suspended, delayed, or interrupted by another cause for which Contractor is responsible; or

.2 adjustment is made or denied under another provision of the Contract.

14.4 *TERMINATION BY CONTRACTOR*

14.4.1 Contractor may terminate the Contract if the Work is stopped for a period of 30 days through no act or fault of Contractor, directly related to one of these events:

.1 issuance of an order of a court or other public authority having jurisdiction;

.2 act of government, such as a declaration of national emergency which makes material unavailable; or

.3 if repeated suspensions, delays, or interruptions by the City as described in Paragraph 14.3 constitute, in the aggregate, more than 100 percent of the total number of days scheduled for completion, or 120 days in any 365-day period, whichever is less;

No termination will be effective for the above reasons if Contractor delivers written notice to City Engineer describing the reason for termination, giving the proposed termination date, and granting the City a reasonable opportunity to respond and cure any City default before termination is effective.

14.4.2 If the Contract is terminated pursuant to this Paragraph 14.4, Contractor shall comply with the requirements of Paragraphs 14.2.2 through 14.2.7.

END OF DOCUMENT

Document 00800

SUPPLEMENTARY CONDITIONS

The following Paragraphs amend and supplement the November 1, 2011 edition of General Conditions. Unaltered portions of General Conditions remain in effect.

ARTICLE 3 - THE CONTRACTOR

3.5 *LABOR*: *Insert the following Paragraph 3.5.3.1.1*

3.5.3.1.1 If the original contract price is greater than $1 Million Dollars, the Contractor shall make good faith efforts to comply with the City ordinances regarding Minority Business Enterprises (MBE), Persons with Disabilities Business Enterprises (PDBE) and Small Business Enterprise (SBE) participation goals which are as follows:

.1 the MBE goal is __9%__ percent,

.2 the SBE goal is __7%__ percent, and

.3 the PDBE goal is 0 percent

ARTICLE 4 – ADMINISTRATION OF THE CONTRACT

4.3 *CLAIMS AND DISPUTES: Insert the following Paragraph 4.3.3.1:*

4.3.3.1 Contractor waives any claim if contractor fails to submit the claim within 90 days of the date of the occurrence giving rise to the claim ("90 day time limit"). Contractor shall automatically release the city from any claim not submitted before the 90 day time limit when contractor submits an application for payment after the 90 day time limit.

ARTICLE 8 - TIME

8.1 *PROGRESS AND COMPLETION: Add the following Paragraph 8.1.6.1.*

8.1.6.1 Contractor shall credit the City by Change Order for inspection services for overtime work or work performed on Sundays or Legal Holidays. The amount Contractor credits the City will be [$50.00 per hour] per inspector for inspection services.

ARTICLE 9 - PAYMENTS AND COMPLETION

9.1 References to Unit Prices in individual Specification sections are not applicable to the Contract. Include payment for portions of the Work required by these sections in the Stipulated Price for the Contract.

9.12 *LIQUIDATED DAMAGES*:

9.12.1.1 The amount of liquidated damages payable by Contractor or Surety for each and every day of delay beyond Contract Time, are ___$1,200.00___ per day.

ARTICLE 11 - INSURANCE AND BONDS

11.2 INSURANCE TO BE PROVIDED BY CONTRACTOR: Insert the following Paragraph 11.2.1.2

11.2.1.2 Contractor shall purchase for the duration of the Contract the insurance set out in Table 2 in addition to the minimum insurance coverage set out in section 11.2.1.

END OF DOCUMENT

Document 00805

AFFIRMATIVE ACTION COMPLIANCE PROGRAM
(City of Houston Information Requirements
for the Successful Bidder on
All Non-federally Funded Construction Contracts)

CONTRACT COMPLIANCE REQUIREMENTS CC-2

DOCUMENTS THAT MUST BE SIGNED AND RETURNED TO THE CITY OF HOUSTON PRIOR TO FINAL EXECUTION OF CONTRACT

Certification by Bidder Regarding Equal Employment Opportunity CC-5

Total Work Force Composition of the Company, ...CC-8
or in lieu thereof, a copy of the latest EEO-1 form
(This information is required only if the Contractor has a work force of 50 or more people and the Contract is $50,000 or more.)

Company's Affirmative Action Compliance Program CC-9

Certificate from Contractor CC-10
Appointing Officer or Employee to Supervise Payment of Employees

Special Provisions CC-11
Specific Equal Employment Opportunity Policy

INFORMATION THAT MUST BE SUPPLIED DURING THE COURSE OF THE WORK

Certification By Proposed Subcontractor Regarding
Equal Employment Opportunity CC-30

Certificate from Subcontractor CC-33
Appointing Officer or Employee to Supervise Payment of Employees

PLEASE COMPLETE PAGES CC-5 THROUGH CC-10 AND MAIL TO:

City of Houston
Mayor's Office of Business Opportunity
Contract Compliance Section
611 Walker, 7th Floor
Houston, Texas 77002
Attention: Director

The remainder of the reports can be mailed at the appropriate time.

OFFICE OF BUSINESS OPPORTUNITY'S CONTRACT COMPLIANCE REQUIREMENTS

The following are Contract Compliance requirements to be met and documents to be submitted to:

Mayor's Office of Business Opportunity
Contract Compliance Section
611 Walker, 7th Floor
Houston, Texas 77002

Under the conditions and terms of all City construction contract, the prime contractor is responsible for all labor and MWBE compliance, including subcontractor compliance.

CONTRACT COMPLIANCE FORMS (CC Forms)

These forms are submitted by the prime contractors at the beginning of the Project and as requested:

CC Forms 5, 6, 7, 8, 9, and 10 by prime contractors.

These forms are submitted by all subcontractors before they begin work on the project.

CC Forms 30, 31, 32, and 33 by subcontractors.

This form is submitted for suppliers and professional service companies who will provide goods or services to this project.

CC Form 34

CERTIFIED PAYROLLS

1. Payrolls are submitted weekly, unless the prime Contractor has been instructed to do so otherwise by the Office of Business Opportunity. When no work is done after a Contractor has started work, the Contractor is required to submit the signed weekly compliance statement (WH347) marked with "No Work Performed". The payrolls must reflect the exact work and classification of the workers, the exact amount that they were paid. Workers must be paid the contracted prevailing wage rates for work performed. The Contractor will be penalized $60.00 a day for each employee who is underpaid per Texas Government Code 2258-023 for all contracts except Federally Funded Contract.

2. Payrolls must be signed by an authorized person. Only ORIGINAL signatures are acceptable - no copied signatures. Payrolls must clearly indicate whether the worker worked inside or outside the building area and the project number.

3. Payrolls must be numbered and clearly marked: the first payroll as No. 1; etc. Payroll for the final week worked on the job should be marked "FINAL".
4. Payrolls must have "Week Ending" dates and cover no more than a 7 day period.

5. Payrolls must contain the employees' names, addresses, social security numbers, and job classifications. The job classifications must be the same as the classifications listed on the prevailing wage rate schedule.

6. A payroll deduction authorization form must be submitted for each employee for any deductions other than Federal and FICA taxes and court ordered child support.

7. Employees must be paid overtime (time and a half) for all hours worked over 40 hours a week on both federally and City-funded contracts.

8. The Contractor has the responsibility to comply with all Internal Revenue Service rules and regulations. Contractors who submit certified payrolls with owner operators (truckers) must submit a signed statement from each Owner Operator acknowledging the Trucker's responsibility for payment of Federal Income Tax and FICA.

9. Companies that have computerized payroll systems must copy the back of the certified payroll, WH-Form 347, and submit it with the authorized official's original signature.

10. Apprenticeship certificates, when applicable, must be submitted in advance of the employee appearing on the payroll so eligibility can be validated.

Prime Contractor must submit a list of all Subcontractors, Suppliers and Service providers who will work on the project or provide goods or services to the project. (Both minority and non minority). The list must contain the names, addresses, types of work, amount of contracts and how they will perform on the project (i.e. supplier, manufacturer, ,subcontractor or professional service).

POSTINGS

The following posters should be clearly displayed on each job site, or in case of annual service agreements, in the Contractor's office:

1. Prevailing Wage Rate Schedule
2. Equal Employment Opportunity is the Law Poster

JOB SITE VISITS

Site visits will be made by a Contract Compliance Officer. He/She will make his/her presence known to the Project Manager, Supervisor, or Foreman, and will conduct interviews with employees on site.

MWBE/PDBE/SBE COMPLIANCE

1. It is the responsibility of the prime Contractor to determine the ability of all Subcontractors to perform the work.

2. Only companies certified by the Office of Business Opportunity will be counted toward the participation goal. The City provides an online directory of certified companies for use by contractors in meeting MWBE/PDBE/SBE goals. CREDIT FOR PARTICIPATION WILL BE GIVEN ONLY IN THE SPECIFIC CATEGORY OF CERTIFICATION LISTED IN THE MWBE/PDBE/SBE DIRECTORY. A SINGLE SUBCONTRACTOR CAN BE USED TO SATISFY ONLY ONE OF THE S/M/W/BE PARTICIPATION GOALS.

3. The percentage goal applies to the value of the contract which includes the value of any amendments or change orders.

4. Only 50% of the MWBE goal can be used toward supplies purchased.

5. A Contractor may be declared in default of its Contract; if it fails to achieve the MWBE/PDBE/SBE goal set out in its Contract, AND fails to meet the city's objective good faith efforts test. A Contractor who fails to make good faith efforts may be declared non-responsible and eliminated from consideration for future city contracts for a reasonable period of time (not to exceed three years).

6. After execution of a contract or receipt of a purchase order, the contractor shall comply with the submitted MWBE/PDBE/SBE plan, unless it has received approval from the Office of Business Opportunity's Director, for a deviation there from.

7. The prime Contractor must report their payments made to all companies online using the reporting system.

PAYMENT AND EVALUATION

Upon completion of the Project, as part of the contract-awarding department's total clearance process, the Office of Business Opportunity's Contract Compliance Section must certify to the department that all Labor, EEO & SMWBE compliance requirements have been met.

CERTIFICATION BY BIDDER REGARDING
EQUAL EMPLOYMENT OPPORTUNITY

GENERAL

In accordance with Executive Order 11246 (30 F.R. 12319-25), the implementing rules and regulations thereof, and orders of the Secretary of Labor, a certification regarding Equal Opportunity is required of bidders or prospective contractors and their proposed subcontractors prior to the award of contracts or subcontracts.

CERTIFICATION OF BIDDER

Bidder's Name:_____

Address:_____

Telephone Number:_____ Fax :_____

E-mail Address:_____

Web Page/URL Address:_____

IRS Employer Identification Number:_____

Work to be performed:_____

Project No:

1. Participation in a previous contract or subcontract.

   a. Bidder has participated in a previous contract or subcontract subject to the Equal Opportunity Clause. ☐ YES ☐NO

   b. Compliance reports were required to be filed in connection with such contract or subcontract. ☐YES ☐NO

   c. Bidder has filed all compliance reports required by Executive Orders 10925, 11114, 11246, or by regulations of the Equal Employment Opportunity Commission issued pursuant to Title VII of the Civil Rights Act of 1964. ☐ YES ☐NO

   d. If answer of Item c. is "No", please explain in detail on reverse side of this certification.

2. Dollar amount of bid:$ _____

3. Anticipated performance period in days: _____

4. Expected total number of employees to perform the proposed construction: _____

5. Nonsegregated facilities.

   a. Notice to prospective federally-assisted construction contractors

      (1) A Certification of Nonsegregated Facilities, as required by the May 9, 1967, Order (32 F.R. 7439, May 19, 1967) on Elimination of Segregated Facilities, by the Secretary of Labor, must be submitted to the recipient prior to the award of a federally-assisted construction contract exceeding $10,000 which is not exempt from the provisions of the Equal Opportunity Clause.

      (2) Contractors receiving federally-assisted construction contract awards exceeding $10,000 which are not exempt from the provisions of the Equal Opportunity Clause will be required to provide the forwarding of the following notice to prospective subcontractors for supplies and construction contracts where the subcontracts exceed $10,000 and are not exempt from the provisions of the Equal Opportunity Clause.

      The federally-assisted construction Contractor certifies that he/she does not maintain or provide any segregated facilities at any of his/her establishments, and does not permit employees to perform their services at any location, under his/her control, where segregated facilities are maintained. The federally-assisted construction Contractor certifies further that he/she will not maintain or provide segregated facilities at any of his/her establishments, and will not permit employees to perform their services at any location, under his/her control, where segregated facilities are maintained. The federally-assisted construction Contractor agrees that a breach of this certification is a violation of the Equal Opportunity Clause in this Contract. As used in this certification, the term "segregated facilities" means any waiting rooms, work areas, restrooms and washrooms, restaurants and other eating areas, time clocks, locker rooms and other storage or dressing areas, parking lots, drinking fountains, recreation or entertainment areas, transportation, and housing facilities provided for employees which are segregated by explicit directive or are in fact segregated on the basis of race, creed, color, or national origin because of habit, local custom, or otherwise. The federally-assisted construction Contractor agrees that (except where he/she has obtained identical certifications from proposed Subcontractors for specific time periods) he/she will obtain identical certifications in duplicate from proposed Subcontractors prior to the award of subcontracts exceeding $10,000 which are not exempt from the provisions of the Equal Opportunity Clause, and that he/she will retain the duplicate of such certifications in his/her files. The Subcontractor will include the original in his/her bid package.

6. Race or ethnic group designation of bidder. Enter race or ethnic group in appropriate box:

☐ White ☐ Black ☐ Hispanic

☐ Pacific Islander, Asian ☐ American Indian, Aleut.

7. Gender of Owner ☐ Male ☐ Female

REMARKS: _____

Certification - The information above is true and complete to the best of my knowledge and belief.

_____
Company Officer (Please Type)

_____ _____
Signature Date

NOTE: The penalty for making false statements in offers is prescribed in 18 U.S.C. 1001.

Total Work Force Composition of the Company

City of Houston, Affirmative Action Requirements for All Construction Contracts

	White		Black		Hispanic		Pacific Islander/ Asian		Alaska Native/ Amer Ind.		Total Persons		Total Minority		Total Female	
	M	F	M	F	M	F	M	F	M	F	M	F	M	F	M	F
Officials and Administrators																
Professionals																
Paraprofessionals																
Technicians																
Protective Service Workers																
Sales Workers																
Office and Clerical																
Skilled Craft Workers																
Operatives (Semi-skilled)																
Laborers (Unskilled)																
Service / Maintenance Workers																
Others																
Total																

This report includes all of the company's permanent work force. For description of job categories, see Pages CC-27 through CC-29.

Check One: [ ] **Contractor** [ ] **Subcontractor**

COMPANY: _____ **DATE:** _____

OFFICE OF BUSINESS OPPORTUNITY PROGRAM
FOR

_____

Name of Company

The Company's Office of Business Opportunity Program shall consist of documented good faith efforts to comply with the goals, timetables, and objectives set forth in the following Affirmative Action steps:

A. City of Houston's Specific Equal Employment Opportunity Policy and Clause as contained in City Council Ordinance No. 78-1538, passed August 9, 1978.

B. Notice of Requirement for Office of Business Opportunity to ensure Equal Employment Opportunity (Executive Order 11246).

C. Standard Federal Equal Employment Opportunity Construction Contract Specifications (Executive Order 11246).

Project: _____

_____
Company Officer (Please Type)

_____ _____
Signature Date

NOTE: The penalty for making false statements in offers is prescribed in 18 U.S.C. 1001.

CERTIFICATE FROM CONTRACTOR APPOINTING OFFICER OR EMPLOYEE TO SUPERVISE PAYMENT OF EMPLOYEES

Project Name:_____ Date:_____

Location:_____ Project No.:_____

(I) (We) hereby certify that (I am) (we are) the prime Contractor for:

_____

_____
(specify type of job)

in connection with construction of the above-mentioned Project, and that (I) (we) have appointed _____, whose signature appears below, to supervise the payment of (my) (our) employees beginning _____, 20_____; that he/she is in a position to have full knowledge of the facts set forth in the payroll documents and in the statement of compliance required by the Copeland Act and the City of Houston, which he/she is to execute with (my) (our) full authority and approval until such time as (I) (we) submit to the City of Houston a new certificate appointing some other person for the purposes hereinabove stated.

_____ Phone: _____
(Identifying Signature of Appointee)

Attest: _____
(Name of Firm or Corporation)

By: _____ By: _____
(Signature) (Signature)

_____ _____
(Title) (Title)

NOTE: This certificate must be executed by an authorized officer of a corporation or by a member of a partnership, and shall be executed prior to and be submitted with the first payroll. Should the appointee be changed, a new certificate must accompany the first payroll for which the new appointee executes a statement of compliance required by the Copeland Act and the City of Houston.

The Office of Business Opportunity's Director will provide to the administering department a rating of Outstanding, Satisfactory, or Unsatisfactory on the matter of Labor & EEO and MWBE/PDBE/SBE Compliance.

PROVISIONS
SPECIFIC EQUAL EMPLOYMENT OPPORTUNITY POLICY

1. GENERAL

   a. Equal employment opportunity requirements not to discriminate and to take affirmative action to assure equal employment opportunity are required by Executive Order 11246, as amended. The requirements set forth in these Special Provisions shall constitute the specific affirmative action requirements for Project activities under this Contract and shall supplement the notice of requirement for affirmative action to ensure equal employment opportunity and standard federal equal employment opportunity construction contract specifications.
   b. The Contractor shall work with the City and the Federal Government in carrying out equal employment opportunity obligations and in their review of his/her activities under the Contract.
   c. The prime Contractor and all Subcontractors holding subcontracts of $10,000 or more shall comply with the following minimum specific requirement activities of equal employment opportunity. The Contractor shall include these requirements in every subcontract of $10,000 or more with such modification of language as is necessary to make them binding on the Subcontractor.

2. EQUAL EMPLOYMENT OPPORTUNITY POLICY

   The Contractor shall accept as his/her operating policy the following statement which is designed to further the provision of equal employment opportunity to all persons without regard to their race, age, color, religion, sex, or national origin, and to promote the full realization of equal employment opportunity through a positive continuing program:

   It is the policy of this Company to assure that applicants are employed, and that employees are treated during employment, without regard to their race, religion, color, sex, or national origin. Such action shall include: employment, upgrading, demotion, or transfer; recruitment or recruitment advertising; layoff or termination; rates of pay or other forms of compensation; and selection for training, including apprenticeship.

3. EQUAL EMPLOYMENT OPPORTUNITY OFFICER

   The Contractor shall designate and make known to the City contracting officers an equal employment opportunity officer (hereinafter referred to as the EEO Officer) who must be capable of effectively administering and promoting an

active Contractor program of equal employment opportunity and who must be assigned adequate authority and responsibilities to do so.

The name of the company's EEO Officer is:_____

4. DISSEMINATION OF POLICY

a. All members of the Contractor's staff who are authorized to hire, supervise, promote, and discharge employees, or who recommend such action, or who are substantially involved in such action, will be made fully cognizant of, and will implement the Contractor's equal employment opportunity policy and contractual responsibilities to provide equal employment opportunity in each grade and classification of employment. To ensure that the above agreement will be met, the following actions shall be taken as a minimum:

(1) Periodic meetings of supervisory and personnel office employees shall be conducted before the start of work and then not less often than once every six months, at which time the Contractor's equal employment opportunity policy and its implementation will be reviewed and explained. The meetings shall be conducted by the EEO Officer or other knowledgeable company official.

(2) All new supervisory or personnel office employees will be given a thorough indoctrination by the EEO Officer, or other knowledgeable company official, covering all major aspects of the Contractor's equal employment opportunity obligations, within 30 days following their reporting for duty with the Contractor.

(3) The EEO Officer or appropriate company official shall instruct all employees engaged in the direct recruitment of employees for the Project relative to the methods followed by the Contractor in locating and hiring minorities and females.

b. In order to make the Contractor's equal employment opportunity policy known to all employees, prospective employees, and potential sources of employees, i.e., schools, employment agencies, labor unions (where appropriate), college placement officers, etc., the Contractor shall take the following actions:

(1) Notices and posters setting forth the Contractor's equal employment opportunity policy shall be placed in areas readily accessible to employees, applicants for employment, and potential employees.

(2) The Contractor's equal employment opportunity policy and the procedures to implement such policy shall be brought to the attention of employees by means of meetings, employee handbooks, or other appropriate means.

5. RECRUITMENT

a. When advertising for employees, the Contractor shall include in all advertisements for employees the notation "An Equal Opportunity Employer". All such advertisements will be published in newspapers, or other publications, having a large circulation among minority groups in the area from which the Project work force would normally be derived.

b. The Contractor shall, unless precluded by a valid bargaining agreement, conduct systematic and direct recruitment through public and private employee-referral sources likely to yield qualified minority-group applicants, including, but not limited to, State employment agencies, schools, colleges, minority-group organizations, and female recruitment agencies. To meet this requirement, the Contractor shall, through his/her EEO Officer, identify sources of potential minority and female employees, and establish with such identified sources procedures whereby such group applicants may be referred to the Contractor for employment consideration.

In the event the Contractor has a valid bargaining agreement providing for exclusive hiring hall referrals, he/she is expected to observe the provisions of that agreement to the extent that the system permits the Contractor's compliance with equal employment opportunity Contract provisions. (The U. S. Department of Labor has held that where implementation of such agreements has the effect of discriminating against minorities or women, or obligates the Contractor to do the same, such implementation violates Executive Order 11246 as amended).

c. The Contractor shall encourage his/her present employees to refer female or minority-group applicants for employment by posting appropriate notices or bulletins in areas accessible to all such employees. In addition, information and procedures with regard to referring such applicants will be discussed with employees.

6. PERSONNEL ACTIONS

a. Wage, working conditions, and employee benefits shall be established and administered, and personnel actions of every type, including hiring, upgrading, promotion, transfer, demotion, layoff and termination, shall be taken without regard to race, color, religion, sex, national origin, or age. The following procedures shall be followed:

(1) The Contractor shall conduct periodic inspections of Project sites to ensure that working conditions and employee facilities do not indicate discriminatory treatment of Project-site personnel.

(2) The Contractor shall periodically evaluate the spread of wages paid within each classification to determine any evidence of discriminatory wage practices.

(3) The Contractor shall periodically review selected personnel actions in depth to determine whether there is evidence of discrimination. Where evidence is found, the Contractor shall promptly take corrective action. If the review indicates that the discrimination may extend beyond the actions reviewed, such corrective action shall include all affected persons.

(4) The Contractor shall promptly investigate all complaints of alleged discrimination made in connection with his/her obligations under this Contract, shall attempt to resolve such complaints, and shall take appropriate corrective action. If the investigation indicates that the discrimination may affect persons other than the complainant, such corrective action shall include such other persons. Upon completion of each investigation, the Contractor shall inform every complainant of all avenues of appeal.

7. TRAINING AND PROMOTION

a. The Contractor shall assist in locating, qualifying, and increasing the skills of minority-group and women employees and applicants for employment.

b. Consistent with the Contractor's work force requirements and as permissible under Federal and State regulations, the Contractor shall make full use of training programs, i.e., apprenticeship and on-the-job training programs, for the geographical area of Contract performance.

c. The Contractor shall advise employees and applicants for employment of available training programs and entrance requirements for each.

d. The Contractor shall periodically review the training and promotion potential of minority-group and women employees and shall encourage eligible employees to apply for such training and promotion.

8. UNIONS

If the Contractor relies in whole or in part upon unions as a source of employees, he/she shall use his/her best efforts to obtain the cooperation of such unions to increase minority groups and women within the unions, and to effect referrals by such unions of minority and female employees. Actions by the Contractor, either directly or through a contractor's association acting as his/her agent, will include the procedures set forth below:

a. The Contractor shall use best efforts to develop, in cooperation with the unions, joint training programs aimed toward qualifying more minority-group members and women for membership in the unions and increasing the skills of minority-group employees and women so that they may qualify for higher-paying employment.

b. The Contractor shall use best efforts to incorporate an equal employment opportunity clause into all union agreements to the end that such unions will be contractually bound to refer applicants without regard to their race, color, religion, sex, national origin, or age.

c. The Contractor is to obtain information as to the referral practices and policies of the labor union, except that to the extent such information is within the exclusive possession of the labor union, and such labor union refuses to furnish such information to the Contractor, the Contractor shall so certify to the City and shall set forth what efforts have been made to obtain such information.

d. In the event the union is unable to provide the Contractor with a reasonable flow of minority and women referrals within the time limit set forth in the collective bargaining agreement, the Contractor shall, through independent recruitment efforts, fill the employment vacancies without regard to race, color, religion, age, sex, or national origin, making full efforts to obtain qualified and/or qualifiable minority group persons and women. (The U. S. Department of Labor has held that it shall be no excuse that the union with which the Contractor has a collective bargaining agreement providing for exclusive referral failed to refer minority employees.) In the event the union referral practice prevents the Contractor from meeting the obligations pursuant to Executive Order 11246, as amended, and these special provisions, such Contractor shall immediately notify the City.

9. SUBCONTRACTING

a. The Contractor shall use his/her best efforts to solicit bids from and to utilize minority-group and female subcontractors or subcontractors with meaningful minority-group and/or female representation among their employees.

b. The Contractor shall use his/her best efforts to assure Subcontractors' compliance with their equal employment opportunity obligations.

10. RECORDS AND REPORTS

a. The Contractor shall keep such records as are necessary to determine compliance with the Contractor's equal employment opportunity

obligations. The records kept by the Contractor will be designed to indicate:

(1) The number of minority and non-minority group members and women employed in each work classification on the Project.

(2) The progress and efforts being made in cooperation with unions to increase employment opportunities for minorities and women (applicable only to contractors who rely in whole or in part on unions as a source of their work force).

(3) The progress and efforts being made in locating, hiring, training, qualifying, and upgrading minority and female employees.

(4) The progress and efforts being made in securing the services of female and minority subcontractors.

b. All records, including payrolls, must be retained for a period of three years following completion of the Contract work and shall be available at reasonable times and places for inspection by authorized representatives of the City and/or the appropriate federal agency.

CITY OF HOUSTON, TEXAS

EQUAL EMPLOYMENT OPPORTUNITY CLAUSE

Pursuant to City Council Ordinance No. 78-1538, passed August 9, 1978, all contracts entered into by the City of Houston involving the expenditure of $10,000 or more, shall incorporate the following Equal Employment Opportunity Clause:

1. The Contractor, Subcontractor, vendor, Supplier, or lessee shall not discriminate against any employee or applicant for employment because of race, religion, color, sex, national origin, or age. The Contractor, Subcontractor, vendor, Supplier, or lessee shall take affirmative action to ensure that applicants are employed and that employees are treated during employment without regard to their race, religion, color, sex, national origin, or age. Such action will include, but not be limited to, the following: employment; upgrading; demotion or transfer; recruitment advertising; layoff or termination; rates of pay or other forms of compensation; and selection for training, including apprenticeship. The Contractor, Subcontractor, vendor, Supplier, or lessee agrees to post in conspicuous places available to employees, and applicants for employment, notices to be provided by the City setting forth the provisions of this Equal Employment Opportunity Clause.

2. The Contractor, Subcontractor, vendor, Supplier, or lessee states that all qualified applicants will receive consideration for employment without regard to race, religion, color, sex, national origin, or age.

3. The Contractor, Subcontractor, vendor, Supplier, or lessee shall send to each labor union or representatives of workers with which it has a collective bargaining agreement or other contract or understanding, a notice to be provided by the agency contracting officer advising the said labor union or workers' representative of the Contractor's and Subcontractor's commitments under Section 202 of Executive Order No. 11246, and shall post copies of the notice in conspicuous places available to employees and applicants for employment.

4. The Contractor, Subcontractor, vendor, Supplier, or lessee will comply with all provisions of Executive Order No. 11246 and the rules, regulations, and relevant orders of the Secretary of Labor or other Federal Agency responsible for enforcement of the equal opportunity and affirmative action provisions applicable, and shall likewise furnish all information and reports required by the Mayor and/or Contractor Compliance Officers for purposes of investigation to ascertain and effect compliance with this program.

5. The Contractor, Subcontractor, vendor, Supplier, or lessee shall furnish all information and reports required by Executive Order No. 11246, and by the rules, regulations, and orders of the Secretary of Labor, or pursuant thereto, and shall permit access to all books, records, and accounts by the appropriate City and Federal officials for purposes of investigation to ascertain compliance with such rules, regulations, and orders. Compliance reports filed at such times as directed shall contain information as to the employment practice policies, program, and work force statistics of the Contractor, Subcontractor, vendor, Supplier, or lessee.

6. In the event of a Contractor's, Subcontractor's, vendor's, Supplier's, or lessee's non-compliance with the non-discrimination clause of this Contract or with any of such rules, regulations, or orders, this Contract may be canceled, terminated, or suspended in whole or in part, and the Contractor, Subcontractor, vendor, Supplier, or lessee may be declared ineligible for further City contracts in accordance with procedures provided in Executive Order No. 11246, and such other sanctions may be imposed and remedies invoked as provided in said Executive Order, or by rule, regulation, or order of the Secretary of Labor, or as may otherwise be provided by law.

7. The Contractor shall include the provisions of paragraphs 1 through 8 of this Equal Employment Opportunity Clause in every subcontract or purchase order unless exempted by rules, regulations, or orders of the Secretary of Labor issued pursuant to Section 204 of Executive Order No. 11246 of September 24, 1965 so that such provisions will be binding upon each Subcontractor or vendor. The Contractor shall take such action with respect to any subcontractor or purchase order as the contracting agency may direct as a means of enforcing such provisions, including sanctions for noncompliance; provided, however, that in the event the Contractor becomes involved in, or is threatened with litigation with a Subcontractor or vendor as a result of such direction by the contracting agency, the Contractor may request the United States to enter into such litigation to protect the interests of the United States.

8. The Contractor shall file and shall cause each of his Subcontractors, if any, to file compliance reports with the City in the form and to the extent as may be prescribed by the Affirmative Action and Contract Compliance Office. Compliance reports filed at such times as directed shall contain information as to the practices, policies, programs, employment policies, and employment statistics of the Contractor and each Subcontractor.

NOTICE OF REQUIREMENT FOR AFFIRMATIVE ACTION
TO ENSURE EQUAL EMPLOYMENT OPPORTUNITY
(EXECUTIVE ORDER 11246)

1. The Offeror's or Bidder's attention is called to the "Equal Opportunity Clause" and the "Standard Federal Equal Employment Opportunity Construction Contract Specifications" set forth herein.

2. The goals and timetables for minority and female participation, expressed in percentage terms for the Contractor's aggregate work force in each trade on all construction work in the covered area, are as follows:

Timetables	Goals for Minority Participation for Each Trade	Goals for Female Participation for Each Trade
	26.2% - 27.3%	6.9%
	Time Interval	Time Interval
	January 1, 1992 to December 31, 1994	April 1, 1992 to December 31, 1995

These goals are applicable to all the Contractor's construction work (whether or not it is Federal or Federally-assisted) performed in the covered area.

The Contractor's compliance with the Executive Order and the regulations in 41 CFR Part 60-4 shall be based on its implementation of the Equal Opportunity Clause, specific affirmative action obligations required by the specifications set forth in 41 CFR 60-4.3(a), and its efforts to meet the goals established for the geographical area where the Contract resulting from this solicitation is to be performed. The hours of minority and female employment and training must be substantially uniform throughout the length of the Contract, and in each trade, and the Contractor shall make a good faith effort to employ minorities and women evenly on each of its projects. The transfer of minority or female employees or trainees from Contractor to Contractor or from project to project for the sole purpose of meeting the Contractor's goals shall be a violation of the Contract, the Executive Order, and regulations in 41 CFR part 60-4. Compliance with the goals will be measured against the total work hours performed.

3. The Contractor shall provide written notification to the Director of the Office of Federal Contract Compliance Programs within 10 working days of award of any

construction subcontract in excess of $10,000 at any tier for construction work under the Contract resulting from this solicitation. The notification shall list the name, address, and telephone number of the Subcontractor; employer identification number; estimated dollar amount of the subcontract; estimated starting and completion dates of the subcontract; and the geographical area in which the Contract is to be performed.

4. As used in this Notice, and in the Contract resulting from this solicitation, the "covered area" is The Houston, Texas Standard Metropolitan Statistical Area.

STANDARD FEDERAL EQUAL EMPLOYMENT OPPORTUNITY
CONSTRUCTION CONTRACT SPECIFICATIONS
(EXECUTIVE ORDER 11246)

1. As used in these specifications:

   a. "Covered area" means the geographical area described in the solicitation from which this Contract resulted;

   b. "Director" means Director, Office of Federal Contract Compliance Programs, United States Department of Labor, or any person to whom the Director delegates authority;

   c. "Employer identification number" means the Federal Social Security number used on the Employer's Quarterly Federal Tax Return, U. S. Treasury Department Form 941.

   d. "Minority" includes:

      (i) Black (all persons having origins in any of the Black African racial groups not of Hispanic origin);

      (ii) Hispanic (all persons of Mexican, Puerto Rican, Cuban, Central or South American, or other Spanish culture or origin regardless of race);

      (iii) Asian and Pacific Islander (all persons having origins in any of the original peoples of the Far East, Southeast Asia, the Indian Subcontinent, or the Pacific Islands); and

      (iv) American Indian or Alaskan Native (all persons having origins in any of the original peoples of North America and maintaining identifiable tribal affiliations through membership and participation or community identification).

2. Whenever the Contractor, or any Subcontractor at any tier, subcontracts a portion of the work involving any construction trade, it shall physically include in each subcontract in excess of $10,000 the provisions of these specifications and the Notice which contains the applicable goals for minority and female participation and which is set forth in the solicitations from which this Contract resulted.

3. If the Contractor is participating (pursuant to 41 CFR 60-4.5) in a Hometown Plan approved by the U. S. Department of Labor in the covered area either individually or through an association, its affirmative action obligations on all work in the Plan area (including goals and timetables) shall be in accordance with that Plan for

those trades which have unions participating in the Plan. Contractors must be able to demonstrate their participation in and compliance with the provisions of any such Hometown Plan. Each Contractor or Subcontractor participating in an approved Plan is individually required to comply with its obligations under the EEO clause, and to make a good faith effort to achieve each goal under the Plan in each trade in which it has employees. The overall good faith performance by other Contractors or Subcontractors toward a goal in an approved Plan does not excuse any covered Contractor's or Subcontractor's failure to take good efforts to achieve the Plan goals and timetables.

4. The Contractor shall implement the specific affirmative action standards provided in Paragraphs 7a through p of these specifications. The goals set forth in the solicitation from which this Contract resulted are expressed as percentages of the total hours of employment and training of minority and female utilization the Contractor should reasonably be able to achieve in each construction trade in which it has employees in the covered area. The Contractor is expected to make substantially uniform progress toward its goals in each craft during the period specified.

5. Neither the provisions of any collective bargaining agreement, nor the failure by a union with whom the Contractor has a collective bargaining agreement to refer either minorities or women, shall excuse the Contractor's obligations under these specifications, Executive Order 11246, or the regulations promulgated pursuant thereto.

6. In order for the non-working training hours of apprentices and trainees to be counted in meeting the goals, such apprentices and trainees must be employed by the Contractor during the training period, and the Contractor must have made a commitment to employ the apprentices and trainees at the completion of their training, subject to the availability of employment opportunities. Trainees must be trained pursuant to training programs approved by the U. S. Department of Labor.

7. The Contractor shall take specific affirmative actions to ensure equal employment opportunity. The evaluation of the Contractor's compliance with these specifications shall be based upon its effort to achieve maximum results from its actions. The Contractor shall document these efforts fully, and shall implement affirmative action steps at least as extensive as the following:

    a. Ensure and maintain a working environment free of harassment, intimidation, and coercion at all sites, and in all facilities at which Contractor's employees are assigned to work. The Contractor, where possible, shall assign two or more women to each construction project. The Contractor shall specifically ensure that all foremen, superintendents, and other on-site supervisory personnel are aware of and carry out the Contractor's obligation to maintain such a working environment, with

specific attention to minority or female individuals working at such sites or in such facilities.

b. Establish and maintain a current list of minority and female recruitment sources; provide written notification to minority and female recruitment sources and to community organizations when the Contractor or its unions have employment opportunities available, and maintain a record of the organizations' responses.

c. Maintain a current file of the names, addresses, and telephone numbers of each minority and female off-the-street applicant and minority or female referral from a union, a recruitment source, or community organization and of what action was taken with respect to each such individual. If such individual was sent to the union hiring hall for referral and was not referred back to the Contractor by the union or, if referred, not employed by the Contractor, this shall be documented in the file with the reason therefor, along with whatever additional actions the Contractor may have taken.

d. Provide immediate written notification to the Director when the union or unions with which the Contractor has a collective bargaining agreement has not referred to the Contractor a minority person or woman sent by the Contractor, or when the Contractor has other information that the union referral process has impeded the Contractor's efforts to meet its obligations.

e. Develop on-the-job training opportunities and/or participate in training programs for the area which expressly include minorities and women, including upgrading programs and apprenticeship and trainee programs relevant to the Contractor's employment needs, especially those programs funded or approved by the Department of Labor. The Contractor shall provide notice of these programs to the sources compiled under 7b above.

f. Disseminate the Contractor's EEO policy by providing notice of the policy to unions and training programs and requesting their cooperation in assisting the Contractor in meeting its EEO obligations by including it in any policy manual and collective bargaining agreement; by publicizing it in the company newspaper, annual report, etc.; by specific review of the policy with all management personnel and with all minority and female employees at least once a year; and by posting the company EEO policy on bulletin boards accessible to all employees at each location where construction work is performed.

g. Review, at least annually, the company's EEO policy and affirmative action obligations under these specifications with all employees having any responsibility for hiring, assignment, layoff, termination, or other employment decisions, including specific review of these items with on-

site supervisory personnel such as superintendents, general foremen, etc., prior to the initiation of construction work at any job site. A written record shall be made and maintained identifying the time and place of these meetings, persons attending, subject matter discussed, and disposition of the subject matter.

h. Disseminate the Contractor's EEO policy externally by including it in any advertising in the news media, specifically including minority and female news media, and providing written notification to and discussing the Contractor's EEO policy with other contractors and subcontractors with whom the Contractor does or anticipates doing business.

i. Direct its recruitment efforts, both oral and written, to minority, female and community organizations, to schools with minority and female students, and to minority and female recruitment and training organizations serving the Contractor's recruitment area and employment needs. Not later than one month prior to the date for the acceptance of applications for apprenticeship or other training by any recruitment source, the Contractor shall send written notification to organizations such as the above, describing the openings, screening procedures, and tests to be used in the selection process.

j. Encourage present minority and female employees to recruit other minority persons and women and, where reasonable, provide after school, summer, and vacation employment to minority and female youth both on the site and in other areas of a Contractor's work force.

k. Validate all tests and other selection requirements where there is an obligation to do so under 41 CFR Part 60-3.

l. Conduct, at least annually, an inventory and evaluation at least of all minority and female personnel for promotional opportunities and encourage these employees to seek or to prepare, through appropriate training, etc., for such opportunities.

m. Ensure that seniority practices, job classifications, work assignments, and other personnel practices do not have a discriminatory effect by continually monitoring all personnel and employment-related activities to ensure that the EEO policy and the Contractor's obligations under these specifications are being carried out.

n. Ensure that all facilities and company activities are nonsegregated except that separate or single-user toilet and necessary changing facilities shall be provided to assure privacy between the sexes.

o. Document and maintain a record of all solicitations of offers for subcontracts from minority and female construction contractors and

suppliers, including circulation of solicitations to minority and female contractor associations and other business associations.

p. Conduct a review, at least annually, of all supervisors' adherence to and performance under the Contractor's EEO policies and affirmative action obligations.

8. Contractors are encouraged to participate in voluntary associations which assist in fulfilling one or more of their affirmative action obligations (7a through p). The efforts of a contractor association, joint contractor union, contractor-community, or other similar group of which the Contractor is a member and participant, may be asserted as fulfilling any one or more of its obligations under 7a through p of these Specifications provided that the Contractor actively participates in the group, makes every effort to assure that the group has a positive impact on the employment of minorities and women in the industry, ensures that the concrete benefits of the program are reflected in the Contractor's minority and female work force participation, makes a good faith effort to meet its individual goals and timetables, and can provide access to documentation which demonstrates the effectiveness of actions taken on behalf of the Contractor. The obligation to comply, however, is the Contractor's and failure of such a group to fulfill an obligation shall not be a defense for the Contractor's noncompliance.

9. A single goal for minorities and a separate single goal for women have been established. The Contractor, however, is required to provide equal employment opportunity and to take affirmative action for all minority groups, both male and female, and all women, both minority and non-minority. Consequently, the Contractor may be in violation of the Executive Order if a particular group is employed in a substantially disparate manner (for example, even though the Contractor has achieved its goals for women generally, the Contractor may be in violation of the Executive Order if a specific minority group of women is under utilized).

10. The Contractor shall not use the goals and timetables or affirmative action standards to discriminate against any person because of race, color, religion, sex, or national origin.

11. The Contractor shall not enter into any subcontract with any person or firm debarred from Government contracts pursuant to Executive Order 11246.

12. The Contractor shall carry out such sanctions and penalties for violation of these specifications and of the Equal Opportunity Clause, including suspension, termination, and cancellation of existing subcontracts as may be imposed or ordered pursuant to Executive Order 11246, as amended, and its implementing regulations, by the Office of Federal Contract Compliance Programs. Any Contractor who fails to carry out such sanctions and penalties shall be in violation of these specifications and Executive Order 11246, as amended.

13. The Contractor, in fulfilling its obligations under these specifications, shall implement specific affirmative action steps, at least as extensive as those standards prescribed in Paragraph 7 of these specifications, so as to achieve maximum results from its efforts to ensure equal employment opportunity. If the Contractor fails to comply with the requirements of the Executive Order, the implementing regulations, or these specifications, the Director shall proceed in accordance with 41 CFR 60-4.B.

14. The Contractor shall designate a responsible official to monitor all employment-related activity to ensure that the company EEO policy is being carried out, to submit reports relating to the provisions hereof as may be required by the Government, and to keep records. Records shall at least include for each employee the name, address, telephone number, construction trade, union affiliation, if any, employee identification number when assigned, social security number, race, sex, status (e.g., mechanic, apprentice, trainee, helper, or laborer), dates of changes in status, hours worked per week in the indicated trade, rate of pay, and locations at which the work was performed. Records shall be maintained in an easily-understandable and retrievable form; however to the degree that existing records satisfy this requirement, contractors shall not be required to maintain separate records.

15. Nothing herein provided shall be construed as a limitation upon the application of other laws which establish different standards of compliance or upon the application of requirements for the hiring of local or other area residents (e.g., those under the Public Works Employment Act of 1977 and the Community Development Block Grant Program).

DESCRIPTION OF JOB CATEGORIES

Officials, Managers, and Administrators

Occupations requiring administrative personnel who set board policies, exercise overall responsibility for the execution of these policies, or provide specialized consultation on a regional, district, area basis, or direct individual departments or special phases of a firm's operations.

Includes: Officials, executives, middle management, plant managers, department managers, superintendents, salaried foremen who are members of management, purchasing agents, buyers, bureau chiefs, directors, deputy directors, wardens, examiners, sheriffs, police and fire chiefs, and kindred workers.

Professionals

Occupations which require specialized and theoretical knowledge which is usually acquired through college or experience of such kind and amount as to provide a comparable background.

Includes: Accountants, auditors, airplane pilots and navigators, architects, artists, chemists, designers, dieticians, editors, engineers, lawyers, librarians, mathematicians, natural scientists, registered professional nurses, personnel and labor relations workers, physical scientists, teachers, social workers, doctors, psychologists, economists, systems analysts, employment and vocational rehabilitation counselors, instructors, police and fire captains and lieutenants, and kindred workers.

Paraprofessionals

Occupations in which workers perform some of the duties of a professional or technician in a supportive role, which usually requires less formal training and/or experience normally required for professional or technical status. Such positions may fall within an identified pattern of a "New Careers" concept.

Includes: Library assistants, medical aides, child support workers, police auxiliary, welfare service aides, recreation assistants, homemakers aides, home health aides, and kindred workers.

Technicians

Occupations requiring a combination of basic scientific knowledge and manual skill which can be obtained through about two (2) years of post high school education, such as is offered in many technical institutes and junior colleges, or through equivalent on-the-job training.

Includes: Computer programmers and operators, draftsmen, engineering aides, junior engineers, mathematical aides, licensed practical or vocational nurses, photographers, radio operators, scientific assistants, surveyors, technical illustrators, technicians (medical, dental, electronics, physical sciences), police and fire sergeants, and kindred workers.

Protective Service Workers

Occupations in which workers are entrusted with public safety, security, and protection from destructive forces.

Includes: Police patrol officers, fire fighters, guards, deputy sheriffs, bailiffs, correctional officers, detectives, marshals, harbor patrol officers, and kindred workers.

Sales Workers

Occupations engaging wholly or primarily in direct selling.

Includes: Advertising agents and salespersons, insurance agents and brokers, real estate agents and brokers, stock and bond salespersons, demonstrators, salespersons and sales clerks, grocery clerks, cashiers, and kindred workers.

Office and Clerical

Occupations in which workers are responsible for internal and external communications, recording and retrieval of data and/or information and other paper work required in an office predominantly non-manual, though some manual work not directly involved with altering or transporting the products is included.

Includes: Bookkeepers, cashiers, collectors (bills and accounts), messengers and office helpers, office machine operators, shipping and receiving clerks, stenographers, typists and secretaries, telegraph and telephone operators, court transcribers, hearing reporters, statistical clerks, dispatchers, license distributors, payroll clerks, and kindred workers.

Skilled Craft Workers

Occupations in which workers perform jobs which require special manual skill through on-the-job training and experience, or through apprenticeship or other formal training programs. These workers exercise considerable independent judgment and usually receive an extensive period of training.

Includes: The building trades, hourly paid foremen and leadmen who are not members of management, mechanics and repairmen, skilled machining occupations, compositors and typesetters, electricians, engravers, job setters

(metal), motion picture projectionists, pattern and model makers, stationary engineers, tailors, heavy equipment operators, carpenters, and kindred workers.

Operatives (semi-skilled)

Workers who operate machine or processing equipment or perform other factory-type duties of intermediate skill level which can be mastered in a few weeks and require only limited training.

Includes: Apprentices (auto mechanics), plumbers, bricklayers, carpenters, electricians, mechanics, building trades, metal workers, machinists, printing trades, operatives, attendants (auto service and parking), blasters, chauffeurs, deliverymen, dressmakers and seamstresses (except factory), dryers, furnacemen, heaters (metal), laundry and dry cleaning operatives, milliners, miners, motormen, oilers, greasers, etc. (except auto), painters (except construction and maintenance), photographic process workers, stationary firemen, truck and tractor drivers, weavers (textile), welders and flame cutters, and kindred workers.

Laborers (unskilled)

Workers in manual occupations which generally require no special training. These workers perform elementary duties that may be learned in a few days and require the application of little or no independent judgment.

Includes: Garage workers, car washers and greasers, gardeners (except farm) and groundskeepers, longshoremen and stevedores, lumbermen, craftsmen, and wood choppers, laborers performing lifting, digging, mixing, loading, and pulling operations, and kindred workers.

Service/Maintenance Workers

Occupations in which workers perform duties which result in or contribute to the comfort, convenience, hygiene or safety for the general public or which contribute to the upkeep and care of buildings, facilities or grounds, or public property. Workers in this group may operate machinery.

Includes: Chauffeurs, laundry and dry cleaning operatives, truck drivers, trash collectors, custodial personnel, gardeners and groundskeepers, construction laborers, attendants (hospital and other institutions), professional and personal service, counter and fountain workers, elevator operators, firemen and fire protection, guards, watchmen and doorkeepers, stewards, porters, waiters, and kindred workers.

CERTIFICATION BY PROPOSED SUBCONTRACTOR REGARDING EQUAL EMPLOYMENT OPPORTUNITY

_____
Name of Prime Contractor

_____
Address

GENERAL

In accordance with Executive Order 11246 (30 F.R. 12319-25), the implementing rules and regulations thereof, and orders of the Secretary of Labor, a certification regarding Equal Opportunity is required of bidders or prospective contractors and their proposed subcontractors prior to the award of contracts or subcontracts.

SUBCONTRACTOR'S CERTIFICATION

Subcontractor's Name: _____

Address: _____

IRS Employer Identification Number: _____

Job Description : _____

1. Participation in a previous contract or subcontract.

   a. Subcontractor has participated in a previous contract or subcontract subject to the Equal Opportunity Clause. ____YES ____NO

   b. Compliance reports were required to be filed in connection with such contract or subcontract. ____YES ____NO

   c. Subcontractor has filed all compliance reports required by Executive Orders 10925, 11114, 11246, or by regulations of the Equal Employment Opportunity Commission issued pursuant to Title VII of the Civil Rights Act of 1964. ____YES ____NO

   d. If answer of Item c. is "No", please explain in detail on reverse side of this certification.

2. Dollar amount of proposed subcontract: $ _____

3. Anticipated performance period in days: _____

4. Expected total number of employees to perform the proposed subcontract: _____

5. Nonsegregated facilities.

   a. Notice to prospective federally-assisted construction contractors
      (1) A Certification of Nonsegregated Facilities, as required by the May 9, 1967, order (32 F.R. 7439, May 19, 1967) on Elimination of Segregated Facilities, by the Secretary of Labor, must be submitted to the Contractor prior to the award of a subcontract exceeding $10,000 which is not exempt from the provisions of the Equal Opportunity Clause.
      (2) Contractors receiving subcontract awards exceeding $10,000 which are not exempt from the provisions of the Equal Opportunity Clause will be required to provide for the forwarding of this notice to prospective subcontractors for supplies and construction contracts where the subcontracts exceed $10,000 and are not exempt from the provisions of the Equal Opportunity clause.

   b. <u>Certification of non-segregated facilities</u>

      The federally-assisted construction contractor certified that he/she does not maintain or provide any segregated facilities at any of his/her establishments, and does not permit employees to perform their services at any location, under his/her control, where segregated facilities are maintained. The federally-assisted construction Contractor certifies further that he/she will not maintain or provide any segregated facilities at any of his/her establishments, and will not permit employees to perform their services at any location, under his/her control, where segregated facilities are maintained. The federally-assisted construction Contractor agrees that a breach of this certification is a violation of the Equal Opportunity Clause in this Contract. As used in this certification, the term "segregated facilities" means any waiting rooms, work areas, restrooms and washrooms, restaurants, and other eating areas, time clocks, locker rooms and other storage or dressing areas, parking lots, drinking fountains, recreation or entertainment areas, transportation, and housing facilities provided for employees which are segregated by explicit directive or are in fact segregated on the basis of race, creed, color, or national origin because of habit, local custom, or otherwise. The federally-assisted construction Contractor agrees that (except where he/she has obtained identical certifications from proposed Subcontractors for specific time periods) he/she will obtain identical certifications in duplicate from proposed Subcontractors prior to the award of subcontracts exceeding $10,000 which are not exempt from the provisions of the Equal Opportunity Clause, and that he/she will retain the duplicate of such

certifications in his/her files. The Contractor will include the original in his/her Bid Package.

6. Race or ethnic group designation of bidder. Enter race or ethnic group in appropriate box:

☐ White ☐ Black ☐ Hispanic

☐ Pacific Islander, Asian ☐ American Indian, Aleut.

7. Gender

☐ Male ☐ Female

REMARKS: _

Certification - The information above is true and complete to the best of my knowledge and belief.

_____
Company Officer (Please Type)

_____ _____
Signature Date

NOTE: The penalty for making false statements in offers is prescribed in 18 U.S.C. 1001.

CERTIFICATE FROM SUBCONTRACTOR APPOINTING OFFICER OR EMPLOYEE TO SUPERVISE PAYMENT OF EMPLOYEES

Project Name:_____Date:_____

Location: _____Project No: _____

(I) (We) hereby certify that (I am) (we are) a Subcontractor for _____

_____
(specify type of job)

in connection with construction of the above-mentioned Project, and that (I) (we) have appointed _____, whose signature appears below, to supervise the payment of (my) (our) employees beginning _____, 20_____; that he/she is in a position to have full knowledge of the facts set forth in the payroll documents and in the statement of compliance required by the Copeland Act and the City of Houston, which he/she is to execute with (my) (our) full authority and approval until such time as (I) (we) submit to the City of Houston a new certificate appointing some other person for the purposes hereinabove stated.

_____ Phone: _____
(Identifying Signature of Appointee)

Attest:_____
(Name of Firm or Corporation)

By: _____ By:_____
(Signature) (Signature)

_____ _____
(Title) (Title)

NOTE: This certificate must be executed by an authorized officer of a corporation or by a member of a partnership, and shall be executed prior to and be submitted with the first payroll. Should the appointee be changed, a new certificate must accompany the first payroll for which the new appointee executes a statement of compliance required by the Copeland Act and the City of Houston.

END OF DOCUMENT

CERTIFICATION BY PROPOSED MATERIAL SUPPLIERS,
LESSORS, AND PROFESSIONAL SERVICE PROVIDERS
REGARDING EQUAL EMPLOYMENT OPPORTUNITY

Company Name: _____ $_____
(Supplier, Lessor, Professional Service Provider) (Amount of Contract)

Materials/Services Provided: _____

Company Address: _____

Company Telephone Number:_____ Fax:_____

E-mail Address: _____

Web Page/URL Address:_____

Company Tax Identification Number: ___
Race: ☐ White ☐ Black ☐ Hispanic ☐Pacific Islander, Asian ☐ American Indian, Aleut.
Gender ☐ Male ☐ Female

Project Name & WBS No.: _____

In accordance with the City of Houston Ordinance 78-1538, Supplier/Lessor/Professional Service Provider represents to be an equal opportunity employer and agrees to abide by the terms of the Ordinance. This certification is required of all Suppliers/Lessors/Professional Service Providers (herein Supplier) with contracts in the amount of $10,000.00 or more.

[ ] Yes [ ] No Supplier agrees not to discriminate against any employee or applicant for employment because of race, religion, color, sex, national origin, or age.

[ ] Yes [ ] No Supplier agrees that all qualified applicants will receive consideration for employment without regard to race, religion, color, sex, national origin, or age.

[ ] Yes [ ] No Supplier will comply with all provisions of Executive Order No. 11246 and rules, regulations and applicable orders of the Department of Labor or other Federal Agency responsible for enforcement of applicable equal opportunity and affirmative action provisions and will likewise furnish all information and reports required by the Mayor or Contract Compliance Officers for the purpose of investigation to ascertain and effect compliance with the City of Houston's Office of Business of Opportunity.

[ ] Yes [ ] No The Supplier shall file and cause their sub-tier contractors to file compliance reports with the City in the form and to the extent as may be prescribed by the Mayor or Contract Compliance Officers. Compliance reports filed at such times as directed shall contain information including, but not limited to, the practices, policies, programs, and employment policies.

I hereby certify that the above information is true and correct.

_____ _____
COMPANY OFFICER (Signature) DATE

_____
NAME AND TITLE (Print or type)

END OF DOCUMENT

Document 00808

BIDDER REQUIREMENTS FOR MINORITY AND WOMEN-OWNED BUSINESS ENTERPRISE (MWBE), PERSONS WITH DISABILITIES BUSINESS ENTERPRISE (PDBE) AND SMALL BUSINESS ENTERPRISE (SBE) PROGRAM

CONSTRUCTION CONTRACTS

I. GENERAL

A. CITY AUTHORITIES

1. The "Monitoring Authority" for this Project is:

Director, Office of Business Opportunity or his or her designee.
City of Houston
611 Walker Street, 7th Floor
Houston, Texas 77002

2. The "Contracting Department" for this Project is Department of Public Works and Engineering and the address is that which is specified for the City Engineer in Document 00520 – Agreement.

3. Project Manager is specified in Document 00550 – Contract Approval Notification.

II. REPORTS THAT MUST BE SUBMITTED DURING THE COURSE OF THE CONTRACT:

A. MWBE/PDBE/SBE MONTHLY REPORT PROCESS

1. Mail original of completed MWBE/PDBE/SBE Monthly Utilization Report to the Monitoring Authority.

2. and one copy each to the Project Manager and MWBE/PDBE/SBE Coordinator of the Contracting Department.

III. MWBE/PDBE/SBE REQUIREMENTS:

A. PURPOSE

To facilitate implementation of City of Houston, Tex. Code of Ordinances Chapter 15, Article V, '15-81 et seq., City of Houston, Tex. Ordinance 95-336 (March 29, 1995), Executive Order No. 1-2 (June 14, 1995) relating to MWBE contract participation and to facilitate implementation of City of Houston, Tex. Code of Ordinances Chapter 15, Article VI, relating to PDBE contract participation and Amended Article IX.

B. POLICY

It is the policy of the City to encourage the full participation of Minority and Women-owned Business Enterprises, Persons with Disabilities Business Enterprises and Small Business Enterprise in all phases of its procurement activities and to afford them a full and fair opportunity to compete for City contracts at all levels.

C. POLICY ELEMENTS

1. The Contractor agrees to ensure that MWBE/PDBE/SBE firms have a full and fair opportunity to participate in the performance of City contracts. In this regard the Contractor shall take all reasonable Good Faith Efforts to meet the MWBE/PDBE/SBE goals for this Contract.

2. The Contractor and any Subcontractor shall not discriminate on the basis of race, color, religion, national origin, or sex in the performance of City contracts.

3. Contractor's performance in meeting the MWBE/PDBE/SBE participation goals will be monitored during the construction phase of the Contract by the Monitoring Authority.

D. PERCENTAGE GOALS

The MWBE, PDBE and SBE goals for MWBE, PDBE and SBE participation in the Work are specified in Document 00800 – Supplementary Conditions Goals.

E. CONTRACTOR RESPONSIBILITIES

1. Prior to Award:

Low Bidder shall provide MWBE/PDBE/SBE documents in accordance with the requirements of Document 00495 – Post-bid Procedures.

a. Contractor shall be bound by the MWBE/PDBE/SBE Participation Plan-Document 0600A (the "Plan") submitted, unless a deviation request is approved from the Director of Office of Business Opportunity.

b. All MWBE/PDBE/SBE firms listed in the Plan must be certified prior to bid date. Non-certified firms may obtain priority certification if there are less than three certified firms with the same capability as the non-certified firm.

c. The Director of Office of Business Opportunity is authorized to suspend any Contractor who has failed to make Good Faith Efforts to meet the goals; and to suspend any firm that has failed to make Good Faith Efforts to meet all requirements necessary for participation as an MWBE/PDBE/SBE firm.

d. Contractor shall execute written contracts with all MWBE/PDBE/SBE Subcontractors and Suppliers; and shall include in all such contracts those provisions provided in Articles 3 and 5 of Document 00700 - General Conditions.

e. Contractor shall designate an MWBE/PDBE/SBE liaison officer who will administer the Contractor's MWBE/PDBE/SBE program and who shall be responsible for maintenance of records of Good Faith Efforts to subcontract with MWBE/PDBE/SBE Subcontractors and Suppliers.

2. After Award:

a. Contractor shall submit MWBE/PDBE/SBE Monthly Utilization Reports, requested in Article II above.

b. Contractor, upon approval of the Director of Office of Business Opportunity, shall make Good Faith Efforts to replace a certified MWBE/PDBE/SBE firm that is displaced, for any reason, with another certified MWBE/PDBE/SBE firm.

c. Contractor shall conform to the Plan unless the Director of Office of Business Opportunity approves otherwise. Approval shall not be unreasonably withheld.

d. Contractor shall submit all disputes with MWBE Subcontractors and Suppliers to binding arbitration as set out in the City's Office of Business Opportunity, MWBE, PDBE and SBE Procedures dated June 21, 2006.

F. ELIGIBILITY OF MWBE/PDBE/SBE FIRM

1. To ensure that the MWBE/PDBE/SBE program benefits only those firms that are owned and controlled by a minority person(s), a woman (women),a person(s) with a disability or a small business enterprise, the Office of Business Opportunity will certify the eligibility of MWBE/PDBE/SBE Subcontractors/Suppliers. Contact the Office of Business Opportunity Certification Section at (713) 837-9000 for information regarding certification.

2. The Office of Business Opportunity maintains a Certified Minority, Women and Disadvantaged Business Enterprise Directory on the City's website. This Directory also lists federally-designated Disadvantaged Business Enterprises (DBEs), Persons with Disabilities Business Enterprises (PDBEs) and Small Business Enterprises (SBEs).

NOTE: All MWBE/PDBE/SBE firms, even if certified by another agency, must be certified by the Office of Business Opportunity in order to qualify for attainment of the MWBE/PDBE/SBE goals.

G. DETERMINATION OF MWBE/PDBE/SBE PARTICIPATION

MWBE/PDBE/SBE participation shall be counted toward meeting the MWBE/PDBE/SBE goals in response to the following:

1. Once a firm is certified as a MWBE/PDBE/SBE, the total dollar value of the subcontract awarded to the MWBE/PDBE/SBE firm is counted toward the MWBE/PDBE/SBE participation goals (See Paragraphs III.G.4 and III.G.5 below). Safety and Participation goals do not count as a single goal concerning MWBE/PDBE/DBE/SBE requirements.

2. When Contractor or Subcontractor is in a joint venture with one or more MWBE/PDBE/SBE firms to satisfy those goals, the Director of Office of Business Opportunity shall determine the percent of participation resulting from such joint venture to be counted toward the goals.

3. Contractor may count toward its goals, those MWBE/PDBE/SBE Subcontractors/ Suppliers performing a Commercially Acceptable Function.

a. **COMMERCIALLY ACCEPTABLE FUNCTION** means a discrete task or group of tasks, the responsibility for performance of which shall be discharged by the MWBE/PDBE/SBE firm by using its own forces or by actively supervising on-site the execution of the tasks by another entity for whose work the MWBE/PDBE/SBE firm is responsible. Without limiting the generality of the foregoing, a MWBE/PDBE/SBE will not be considered to be performing a commercially acceptable function, if it subcontracts to non-MWBE/PDBE/SBE firms or to other

MWBE/PDBE/SBE firms, more than 50 percent of a contract being counted toward the applicable participation goals, unless such subcontracting in excess of 50 percent has been expressly permitted by the Director in a written waiver of this requirement. A waiver shall be granted upon demonstration that the industry standard for the type of work involved is to subcontract over 50 percent of the work.

4. A MWBE/PDBE/SBE firm cannot subcontract more than 50 percent of the work for which it is responsible to perform unless waived by the Director.

5. Contractor may count 100 percent of MWBE/PDBE/SBE Supplier's participation toward its goals and such MWBE/PDBE/SBE Supplier contracts shall not exceed 50 percent of Contract's goals.

H. CONTRACTOR COMPLIANCE

To ensure compliance with MWBE/PDBE/SBE requirements, the Monitoring Authority will monitor Contractor's efforts regarding MWBE/PDBE/SBE Subcontractors/Suppliers during the performance of this Contract. This may be accomplished through the following: job site visits, reviewing of records and reports, and interviews of randomly selected personnel.

I. RECORDS AND REPORTS

1. Contractor shall submit an initial report outlining MWBEPDBE/SBE participation, 40 days after the Notice to Proceed date, and on or before the 15th day of each month thereafter until all MWBE/PDBE/SBE subcontracting or material supply activity is completed. Each report shall cover the preceding month's activity. Use the MWBE/PDBE/SBE management and contract compliance system form to meet this requirement.

2. Contractor shall maintain the following records for review upon request by the Monitoring Authority:

a. Copies of executed Subcontractor agreements and purchase orders;
b. Documentation of payments and other transactions with MWBE/PDBE/SBE Subcontractors/ Suppliers;
c. Appropriate explanations of any changes or replacements of MWBE/PDBE/SBE Subcontractors/Suppliers;
NOTE: All replacement MWBE/PDBE/SBE Subcontractors/Suppliers must be certified by the Office of Business Opportunity.
d. Any other records required by the Monitoring Authority.

3. If the goals is not being met, the monthly report shall include a narrative description of the progress being made in MWBE/PDBE/SBE participation. If

sufficient MWBE/PDBE/SBE Subcontractors or Suppliers to meet the goals are being utilized, they should be identified by name and the dollar amount paid to date for work performed or materials furnished by each MWBE/PDBE/SBE during the monthly period. Reports are required when no activity has occurred in a monthly period.

4. All such records must be retained for a period of four years following completion of the Work and shall be available at reasonable times and places for inspection by authorized representatives of the City including the City Controller.

IV. SANCTIONS:

A. SUSPENSION PERIOD AND WAIVER

Pursuant to Section 15-86 of the Code of Ordinances, the Director of Office of Business Opportunity is authorized to suspend for a period of up to, but not to exceed, five years, any Contractor who has failed to make Good Faith Efforts. The Director is also authorized to suspend any MWBE/PDBE/SBE who has failed to make Good Faith Efforts from engaging in any Contract affected by Article V, Article VI or Article IX of Chapter 15 of the Code of Ordinances for a period of up to, but not to exceed, five years.

B. GUIDELINES FOR IMPOSITION OF SANCTIONS

1. General:

a. No suspension shall be imposed by the Director of Office of Business Opportunity except upon evidence of specific conduct on the part of a MWBE/PDBE/SBE or Contractor that is inconsistent with or in direct contravention of specific applicable requirements for Good Faith Efforts.

b. Imposition and enforcement of suspensions shall be consistent with applicable state law.

2. Severity of Sanctions:

a. In determining the length of any suspension, the Director shall consider the following factors:

(1) Whether the failure to comply with applicable requirements involved intentional conduct or, alternatively, may be reasonably concluded to have resulted from a misunderstanding on the part of the Contractor or MWBE/PDBE/SBE of the duties imposed on them by Article V, Article VI or IX of Chapter 15 of the Code of Ordinances and these procedures;

(2) The number of specific incidences of failure by Contractor or MWBE/PDBE/SBE to comply;

(3) Whether the Contractor or MWBE/PDBE/SBE has been previously suspended;

(4) Whether the Contractor or MWBE/PDBE/SBE has failed or refused to provide the Director with any information requested by the Director or required to be submitted to the Director pursuant to law or these procedures;

(5) Whether the Contractor or MWBE/PDBE/SBE has materially misrepresented any applicable facts in any filing or communication to the Director of Office of Business Opportunity; and

(6) Whether any subsequent restructuring of the subject business or other action has been undertaken to cure the deficiencies in meeting applicable requirements.

b. Suspensions may be for any length of time not to exceed five years. Suspensions in excess of one year shall be reserved for cases involving intentional or fraudulent misrepresentation or concealment of material facts, multiple acts in contravention of applicable requirements, cases where the Contractor or MWBE/PDBE/SBE has been previously suspended, or other similarly egregious conduct.

C. DELEGATION

A decision to implement a suspension may be taken after notice and an opportunity for a hearing by the Director of Office of Business Opportunity or by another impartial person designated by the Director of Office of Business Opportunity for that purpose. The Director of Office of Business Opportunity or other person conducting the hearing shall not have participated in the actions or investigations giving rise to the suspension hearing.

D. NOTICE

1. Prior to the imposition of any suspension, the Director of Office of Business Opportunity shall deliver written notice to the Contractor or MWBE/PDBE/SBE setting forth the grounds for the proposed suspension and setting a date, time, and place to appear before the hearing officer for a hearing on the matter.

2. Any notice required or permitted to be given hereunder to any Contractor or MWBE/PDBE/SBE may be given either by personal delivery or by certified United States mail, postage prepaid, return receipt requested, addressed to their most recent address as specified in the records of the Office of Business Opportunity or in the Contract if no address is on file with the Office of Business Opportunity.

E. HEARING PROCEDURES

Proceedings before the Director of Office of Business Opportunity or other hearing officer shall be conducted informally, provided that each party may be represented by counsel and may present evidence and cross-examine witnesses. The burden shall be upon the City by a preponderance of evidence. The decision shall be reduced to writing and notice provided to the Contractor or MWBE/PDBE/SBE.

F. APPEALS

Appeals authorized pursuant to Section 15-86(b) of the Code of Ordinances shall be conducted by an arbitrator who shall act as the hearing officer. Alternatively, an appeal may be taken to City Council, subject to the appellant's compliance with Rule 12 of the City Council Rules of Procedure. Appeals shall be initiated by filing a written notice of appeal with the Director of Office of Business Opportunity no later than 15 days following the mailing of notice of the decision of the Director of Office of Business Opportunity, and the appeal notice shall state whether the appeal is requested to City Council or to an arbitrator. If an arbitration appeal is requested, then the arbitrator shall be selected as provided in Section 9 of these procedures. The arbitrator's or City Council's decision, as applicable, shall be final. The Director of Office of Business Opportunity shall determine whether to suspend his or her order pending an appeal, taking into account the criteria set forth in Section 6(B)(2) of these procedures.

ATTACHMENT A

City of Houston

Office of Business Opportunity

Good Faith Efforts

"Good Faith Efforts" means those efforts required to be made and demonstrated by an apparently successful bidder or propose prior to award of a contract (whether a Goal Oriented Contract or a Regulated Contract) and at the conclusion of performance of the Contract in the event it has been unsuccessful in meeting the contract MWBE goal.

A. Prior to Award - Good Faith Efforts for non-MWBEs in construction, procurement and professional services shall mean at a minimum the following:
    1. Delivery of written notice to the following:
        a. All local certified MWBEs in the directory for the month prior to the month of the bid or proposal submission date and identified as performing work or services or providing commodities for all potential subcontracting or supply categories in the Contract; and
        b. All minority and women focused associations identified in the directory for the month prior to the month of the bid or proposal submission date; and
        c. All news media focused toward minority persons and women identified in the directory for the month prior to the month of the bid or proposal submission date; and
        d. All MWBEs, which request information on the Contract.
    2. The written Notice shall contain:
        a. Adequate information about plans, specifications, and relevant terms and conditions of the contract and about the work to be subcontract or the goods to be obtained from subcontractors and suppliers;
        b. A contact person within the apparent low bidder 's or proposer's office to answer questions;
        c. Information as to the apparent low bidder's or proposer's bonding requirements, the procedure for obtaining any needed bond, and the name and telephone number of one or more acceptable surety companies to contact;
        d. The last date for receipt by the bidder or proposer of MWBE bids or price quotations;
    3. Attendance at any special pre-bid meeting called to inform MWBEs of subcontracting or supply opportunities, if set forth in the bidding or proposal documents.

4. Division of the Contract, as recommended by the department head of the initiating City department and in accordance with normal industry practice, into small, economically feasible segments that could be performed by MWBEs.

5. Providing an explanation for rejection to any MWBE whose bid or price quotation is rejected, unless another MWBE is accepted for the same work, as follows:
    a. Where price competitiveness is not the reason for rejection, a written rejection notice including the reason for rejection will be sent to the rejected MWBE firm;
    b. Where price competitiveness is the reason for rejection, a meeting must be held, if rejected, with the price-rejected MWBE to discuss the rejection; and
6. Providing an explanation for rejection of any MWBE to the Office of Business Opportunity, unless another MWBE firm is accepted for the same work, including the name of he non-MWBE firm proposed to be awarded the subcontract or supply agreement, and if price competitiveness is the reason for rejection, the MWBE's price quotation and the successful non-MWBE price quotation.

B. After Award - Good Faith Efforts for MWBEs in construction, procurement and professional services shall mean at a minimum the following:

1. Designate an MWBE liaison officer who will administer the Contractor's MWBE programs and who shall be responsible for maintenance of records of Good Faith Efforts.
2. MWDBE/PDBE Reporting
    a. Furnishing prompt MWDBE/PDBE Utilization Reports in a timely and accurate manner through the online Contract Monitoring System or via hard copy.
    b. Respond to efforts to resolve disputes between prime and subcontractors, and genuinely attempt to resolve these issues.
    c. Clear online Contract Monitoring System discrepancies monthly.
    d. Contractor shall designate an MWBE liaison officer who will administer the Contractor's MWBE programs and who shall be responsible for maintenance of records of Good Faith Efforts.

3. Deviation Requests - The contractor shall comply with the submitted MWBE plan, unless it has received approval from the Office of Business Opportunity Director. Approval will not be unreasonably withheld. Upon approval, contractor will make a Good Faith Effort to replaced a removed MWBE with another certified firm.
4. Furnishing prompt written response to any written inquiry from the Director of any employee of the Office of Business Opportunity regarding the MWBE's performance or information germane to the MWBE's certification;
5. Ensuring that at all times during the performance of any contract or subcontract subject to the requirements of Chapter1 of the Code of Ordinance the MWBE firm is engaging in a commercially acceptable function as that term is defined herein; and
6. Ensuring that no application, response to a request for information, or other factual material submitted to the Director or any employee of the Office of Business Opportunity contains any material misrepresentation; and
7. Furnishing prompt responses to requests from the department administering the Contract, the City Attorney and the City Controller for information, books and record needed to verify compliance.
8. Attend all meetings, mediation and arbitration hearings as requested by the Director or his/her designee

END OF DOCUMENT

Document 00820

WAGE SCALE FOR ENGINEERING CONSTRUCTION

1.01 In accordance with the Prevailing Wage Law on Public Works (Chapter 2258 of the Texas Government Code), the public body awarding the Contract does hereby specify the following to be the general prevailing rates in the locality in which the Work is being performed.

1.02 This prevailing wage rate does not prohibit the payment of more than the rates stated.

1.03 The wage scale for engineering construction is to be applied to all site work greater than 5 feet from an exterior wall of new building under construction or from an exterior wall of an existing building.

1.04 If Contractor believes that an additional classification for a particular craft or type of worker is necessary to perform work under the Contract, it must submit with its bid a request to the Contract Compliance Division of the Mayor's Office Of Business Opportunity ("OBO") to use an additional labor classification not listed in Exhibit "A" and specify the proposed new classification. OBO shall determine whether a proposed classification is already covered in Exhibit "A", and, if it is, specify which classification is appropriate. OBO's decision is conclusive. If OBO decides that a new classification is necessary, it will determine the appropriate prevailing wage rate for any resurveyed, amended, new, or additional craft or type of worker not covered by Exhibit "A". Such determination must be decided in accordance with procedures established by OBO, and in compliance with Chapter 2258 of the Texas Government Code and City of Houston, Texas Ordinance Nos. 85-2070, 2000-1114, 2001-152, 2006-91, 2006-168 and 2009-247 subject to City Council approval.

REST OF PAGE INTENTIONALLY LEFT BLANK

LABOR CLASSIFICATIONS AND PREVAILING WAGE RATES
FOR
ENGINEERING CONSTRUCTION
2012

CLASSIFICATION	RATE	CLASSIFICATION	RATE
Asphalt Distributor Operator	$14.06	Milling Machine Operator - Fine Grade	$13.53
Asphalt Paving Machine Operator	$14.32	Mixer Operator	$10.33
Asphalt Raker	$12.36	Motor Grader Operator- Rough	$14.23
Asphalt. Shoveler	$11.68	Motor Grader Operator	$15.69
Broom or Sweeper Operator	$12.68	Oiler	$12.12
Bulldozer Operator	$11.81	Painter-Structures	$18.62
Carpenter- Rough	$12.49	Pavement Marking Machine Operator	$11.18
Concrete Finisher- Paving	$11.38	Pile Driverman.	$14.95
Concrete Finisher- Structures	$10.80	Pipe Layer	$12.12
Concrete Paving Curbing Machine Operator	$11.71	Reinforcing Steel Setter - Paving	$15.14
Concrete Paving Finishing Machine Operator	$13.07	Reinforcing Steel Setter - Structure	$13.87
Concrete Paving Joint Sealer Operator	$11.00	Roller Operator, Pneumatic - Self-propelled	$11.57
Concrete Paving. Saw Operator	$13.99	Roller Operator, Steel Wheel, Flat Wheel/Tamping	$11.57
Concrete Paving Spreader Operator.	$10.44	Roller Operator, Steel Wheel, Plant Mix Pavement	$11.92
Concrete Rubber . . .	$9.00	Scraper Operator	$13.47
Crane Clamshell Backhoe Derrick, Dragline, Shovel Operator	$12.71	Servicer	$13.97
Crusher and Screening Plant Operator	$11.29	Sign Installer - PGM	$8.54
Electrician * 3 Journeyman 2 Apprentice	$21.79	Slip Form Machine Operator	$11.07
Flagger	$10.33	Spreader Box Operator	$13.58
Form Builder/Setter- Structures	$10.50	Structural Steel Worker	$14.39
Form Liner- Paving and Curb	$11.75	Tractor Operator - Crawler Type	$13.68
Form Setter- Paving and Curb	$10.51	Tractor Operator- Pneumatic	$10.07
Foundation Drill Operator - Crawler Mounted	$17.43	Transit Mixer Truck Driver	$11.00
Foundation Drill Operator - Truck Mounted	$17.43	Truck Driver, Lowboy-float	$16.03
Front Loader Operator	$13.32	Truck Driver, Single-Axle - Heavy	$11.46
Laborer Common	$11.02	Truck Driver, Single-Axle - Light	$10.07
Laborer- Utility	$11.73	Truck Driver, Tandem Axle Semi-Trailer	$12.24
Manhole Builder	$9.00	Work Zone Barricade Servicer	$11.67
Mechanic	$16.96	Welders - Receive rate prescribed for craft performing operation to which welding is incidental	
* Apprentices- must be in an approved USDOL Program and cannot exceed ratios			

Ordinance No. 2009-247 passed March 25, 2009

Engineering Prevailing Wages
Classification Definitions

Adoption: March 1, 2012

Asphalt Distributor Operator
Drives distributor truck, sets spray bars and operates valves and levers to control distribution of bituminous material for highway surfacing. May oil, grease or otherwise service and make adjustments to equipment as needed. Performs other related duties.

Asphalt Paving Machine Operator
Operates paving machine that spreads and levels asphaltic concrete on highway subgrade. Controls movement of machine, raises and lowers screed, regulates width of screed. May, oil, grease, service and make adjustments to equipment as needed. Performs other related duties.

Asphalt Raker
Distributes asphaltic materials evenly over road surface by raking and brushing material to correct thickness; directs Laborers when to add or take away material to fill low spots or to reduce high spots. Performs other related duties.

Asphalt Shoveler
A general term used on construction work covering many unskilled classifications requiring work of a physical nature. A laborer works with all crews doing everything from pick and shovel work to cleaning up lumber with hammer, shoveling and placing concrete, uses air tools, cleans concrete joints and fills joints with sealing compound from bucket or with hose and nozzle from a central source, applies coating of oil to inside face of forms, may help set and strip forms, unloads and transports reinforcing steel, cures newly poured concrete, helps lower pipe into ditch for pipelayers, builds fences, works with dirt crew keeping construction layout stakes out of the way of dirt moving equipment.

Broom or Sweeper Operator
Operates a self-propelled machine to sweep and clean roadway surfaces. May oil grease, service and make adjustments to equipment as needed. Performs other related duties.

Bulldozer Operator
Operates a crawler tractor with a bulldozer mounted in front of chassis to level, distribute and push earth or other material. May operate a ripper attachment to break up rock or other hard material. May use a push block on front of tractor to push load scrapers. May oil grease, or otherwise service and make minor repairs to equipment as needed. Performs other related duties.

Carpenter, Rough
Works from plans to build, assemble, fit together, align, plum, and set in place forms for molding concrete structures. Forms may be wood, steel, aluminum, fiberglass or any other type of material. Checks form while concrete is placed. May install miscellaneous materials integral to concrete structures. May set precast concrete elements. Prepares for slipforming traffic rail and median barrier. May install permanent metal deck forms. May work with power tools Performs other related duties.

Concrete Finisher, Paving
Finishes the exposed surfaces of fresh concrete paving, median barrier and every element of concrete structures to the final grade and contour structures to the final grade and contour with the use of straight edges and steel trowels. Operates bridge deck finishing machine. Finishes concrete curbs and gutters. Finishes exposed surface of concrete after forms have been removed by patching imperfections with fresh concrete, rubbing surface with abrasive stone, and directing others in removing excess or defective concrete with power tools. Performs other related duties.

Concrete Finisher, Structures
A worker semi-skilled in concrete finishing who assists Concrete finisher by performing specific or general duties of lesser skill and keeping Concrete Finisher supplied with materials, tools, and supplies; cleaning working area an equipment; and holding materials and tools. Performs other related duties.

Concrete Paving Curbing Machine Operator
Operates self - propelled machine(s) which may or may not travel on concrete paving forms, spreading and leveling fresh concrete to grade by use of augers and screeds. May oil, grease or otherwise service and make adjustments to equipment as necessary. Performs other related duties.

Concrete Paving Finishing Machine Operator
Operates self - propelled machine(s) which may or may not travel on concrete paving forms, spreading and leveling fresh concrete to grade by use of augers and screeds. May oil, grease or otherwise service and make adjustments to equipment as necessary. Performs other related duties.

Concrete Paving Joint Sealer Operator
Cleans and seals joints requiring a hot or cold sealing compound in concrete paving, sidewalks, driveway and approach slabs. May oil, grease or make necessary repairs adjustments to equipment as needed. Performs other related duties.

Concrete Paving Saw Operator
Operates a water-cooled power saw with either or an abrasive blade to saw expansion and contraction joints in concrete paving. May also be used to saw asphaltic pavements. May oil grease or otherwise service and make necessary adjustments to equipment as needed. Performs other related duties.

Concrete Paving Spreader Operator
Operates self - propelled machine(s) which may or may not travel on concrete paving forms, spreading and leveling fresh concrete to grade by use of augers and screeds. May oil, grease or otherwise service and make adjustments to equipment as necessary. Performs other related duties.

Concrete Rubber
Finishes the exposed surface of concrete masonry after the forms have been removed by patching holes and broken corners with fresh concrete, rubbing surface with abrasive stone to remove rough spots, and removing high spots and defective concrete with hand chisel and hammer or pneumatic chisel and powered abrasive stone. Performs other related duties.

Crane, Clamshell, Backhoe, Derrick, Dragline, Shovel Operator
A worker who operates a lattice boom type crane can hoist and move materials, raise and lower heavy weights and perform other related operations. May be crawler type or rubber tired. May include placement of rock riprap, clamshell, dragline, pipe and pile driving operations. May oil, grease or otherwise service and make necessary adjustments to equipment as needed. Performs other related duties.

Crusher and Screed Plant Operator
Operates a crusher or screening plant through which rock is run to break it into crushed stone for construction or to control flow of materials not needed. May include minor repairs and may service and make necessary adjustments to equipment as needed. Performs other related duties.

Electrician *3 Journeyman 2 Apprentice
Plans and directs the layout of metal electrical conduit, installs wiring systems, switch-panels, buss bars, works on overhead distribution systems and underground distribution systems. Performs other related duties.

Flagger
A worker who directs traffic in or around a construction site. May use signs or devices to direct traffic. May help assemble, position and clean devices or equipment used to direct traffic. Must be able to effectively communicate with the public. May require certain level of training by TXDOT specifications. Performs other related duties.

Form Builder/Setter, Structures
Fits together, aligns and sets to grade metal and wooden forms for placement of concrete. Forms may be wood, steel, aluminum, fiberglass or any other type of material. Checks forms while concrete is placed. May install miscellaneous materials integral to concrete structures. May set precast concrete elements. Prepares for slipforming traffic rail and median barrier. May install permanent metal deck forms. May work with power tools. Performs other related duties.

Form Liner, Paving & Curb
Fits together, panels align and sets to grade metal and wooden forms for placement of concrete. Works with survey crew to set stringline for panels or moles. Performs other related duties.

Form Setter, Paving & Curb
Fits together, align and set to grade metal and wooden forms for placement of concrete paving and curbs. Works with survey crew to set stringline for paving, curb and gutter curb. Performs other related duties.

Foundation Drill Operator, Crawler Mounted
Operates a hole-drilling machine that is crawler mounted. May include geotechnical operations such as soils nails, rock nails, tiebacks, anchors and jet grouting. May oil, grease or otherwise service and make necessary adjustments to equipment as needed. Performs other related duties.

Foundation Drill Operator, Truck Mounted
Operates a hole drilling machine that is mounted on the rear of a rubber tired vehicle or truck. May include soils nails, rock nails, tiebacks, anchors and jet grouting. Drive truck from location to location or may have laborer who drives truck. May oil, grease or otherwise service and make necessary adjustments to equipment as needed. Performs other related duties.

Front End Loader Operator
Operates a rubber tired, skid steer or crawler type tractor with an attached scoop type bucket on front end. Machine is used to load materials from stockpiles, excavation, charging batch plants, loading and unloading trucks. May be used with attachments in lieu of the bucket. May oil, grease or otherwise service and make necessary adjustments to equipment as needed. Performs other related duties.

Laborer, Common
A general term used on construction work covering many unskilled classifications requiring work of a physical nature. A laborer works with all crews doing everything from pick and shovel work to cleaning up lumber with hammer, shoveling and placing concrete, uses air tools, cleans concrete joints and fills joints with sealing compound from bucket or with hose and nozzle from a central source, applies coating of oil to inside face of forms, may help set and strip forms, unloads and transports reinforcing steel, cures newly poured concrete, helps lower pipe into ditch for pipelayers, builds fences, works with dirt crew keeping construction layout stakes out of the way of dirt moving equipment.

Laborer, Utility
Performs a variety of manual duties, usually working in a utility capacity by working on multiple projects and tasks where demands require workmen with varied experience and ability to work without close direction. Unloads and transports reinforcing steel. May occasionally place and tie reinforcing steel. Directs common laborers in pouring concrete. Erects shoring and bracing. Assists in installation of pipe. Installs, operate and maintains dewatering systems. May assist equipment operators in positioning machines, verifying grades and signaling operators. Directs truck drivers and scraper operators to dumping positions to maintain grades as directed. Uses power tools and air tools. May work as lead man in a labor crew. His performance of a wide variety of construction jobs distinguishes him from a helper assigned to a specific craft. Installs and maintains erosion control. Is more or less a general utility construction worker. May be second step in learning a skill, and may later become a helper in a specific classification. Performs other related duties.

Manhole Builder
Constructs a means of permanent access to water and sewer lines for maintenance purposes. This work consists of laying brick or concrete slab at bottom of ditch up to an approximate grade line near the surface of the ground. Brick or block is normally laid to form a nearly circular manhole. Brick or block is laid in by eyesight and is normally to a plumb line. Chipped or culled brick can be used quite often is. No effort may be made to keep mortar off the face of the brick and joints are not pointed. May apply coating of concrete to interior and exterior surface. Performs other related duties.

Mechanic
Assembles, set up, adjusts and maintains and repairs all types of construction equipment and trucks. He may perform the duties of a welder in repair of equipment. Performs other related duties.

Milling Machine Operator, Fine Grade
Operates a power-driven milling machine that planes material of the to roadbed and discharges the material into a hauling unit or a windrow. May oil, grease or otherwise service and make necessary adjustments to equipment as needed. Performs other related duties.

Mixer Operator
Performs a variety of manual duties, usually working in a utility capacity by working on multiple projects and tasks where demands require workmen with varied experience and ability to work without close direction. Unloads and transports reinforcing steel. May occasionally place and tie reinforcing steel. Directs common laborers in pouring concrete. Erects shoring and bracing. Assists in installation of pipe. Installs, operate and maintains dewatering systems. May assist equipment operators in positioning machines, verifying grades and signaling operators. Directs truck drivers and scraper operators to dumping positions to maintain grades as directed. Uses power tools and air tools. May work as lead man in a labor crew. His performance of a wide variety of construction jobs distinguishes him from a helper assigned to a specific craft. Installs and maintains erosion control. Is more or less a general utility construction worker. May be second step in learning a skill, and may later become a helper in a specific classification. Performs other related duties.

Motor Grader Operator, Rough
Operates a motor grader. Equipment is used to grade excavation and embankment and to lay asphalt , base and other materials. May blade haul roads and do other general motor grader work, but does not perform finish grade work to close specification tolerances. This operator may be a learner in the first phase of learning the skills of motor grader work. May oil, grease or otherwise service and make necessary adjustments to equipment as needed. Performs other related duties.

Motor Grader Operator
Operates a motor grader. Equipment is used to grade excavation and embankment and to lay asphalt , base and other materials. May blade haul roads and do other general motor grader work, but does not perform finish grade work to close specification tolerances. This operator may be a learner in the first phase of learning the skills of motor grader work. May oil, grease or otherwise service and make necessary adjustments to equipment as needed. Performs other related duties.

Oiler
A learner or semi-skilled worker who under the direction of the watch engineer May oil and grease or otherwise service all engines and necessary equipment as needed. He may clean and paint engine room as needed. Performs other related duties.

Painter, Structures
Paints and stains structural steel and concrete surfaces of bridges, retaining walls, or other structures. Directs cleaning and abrasive blasting of surfaces prior to painting or staining. Performs other related duties.

Pavement Marking Machine Operator
Operates machine used in laying paint stripes or markers on all types of paving. Loads machine with appropriate materials and may walk or ride on machine. May oil, grease or otherwise service and make necessary adjustments to equipment as needed. Performs other related duties.

Piledriverman
Sets in place, aligns, plumbs directs driving of timber, concrete, steel, pipe and any other type of piling. Sets, drives and pulls steel, concrete and other types of sheet piling. Rigs pile and leads and bracing. Signals operator. Splices piles before and after driving. Directs pile cutoff. May direct jetting or drilling equipment in connection with installing piles to grade. Performs other related duties.

Pipelayer
Installs concrete, clay, steel, ductile iron, plastic, corrugated pipe and any other type of pipe for storm drainage, water lines, gas lines and sanitary sewer lines. Lays underground communication and electrical ducts. May install and set electrical ground boxes, hand holes, manholes, inlets and other structures. Caulks joints, make threaded and flanged connections. Installs valves and other accessories. Performs other related duties.

Reinforcing Steel Setter, Paving
Works from plans to lay out and install reinforcing steel within forms or in mats of concrete paving. May direct unloading of material. Determines rigging required to complete work. Gives direction to reinforcing steel worker (helper) or common or utility laborers. May install miscellaneous materials integral to concrete structure or paving. May work with power tools. Performs other related duties.

Reinforcing Steel Setter,Structure
Works from plans to lay out and install reinforcing steel within forms or in mats of concrete paving. May direct unloading of material. Determines rigging required to complete work. Gives direction to reinforcing steel worker (helper) or common or utility laborers. May install miscellaneous materials integral to concrete structure or paving. May work with power tools. Performs other related duties.

Roller Operator, Pneumatic, Self-Propelled
Operates a self-propelled machine with either steel wheels pneumatic tires, which is used to compact and smooth all bituminous materials. May oil, grease or otherwise service and make necessary adjustments to equipment as needed. Performs other related duties.

Roller Operator, Steel Wheel, Flat Wheel/Tamping
Operates a self-propelled machine with either steel wheels or pneumatic tires which is used to compact earth fills, subgrade, flexible base and all other types of materials except bituminous. May oil, grease or otherwise service and make necessary adjustments to equipment as needed. Performs other related duties.

Roller Operator, Steel Wheel, Plant Mix Pavement
Operates a self-propelled machine with either steel wheels pneumatic tires, which is used to compact and smooth all bituminous materials. May oil, grease or otherwise service and make necessary adjustments to equipment as needed. Performs other related duties.

Scraper Operator
Operates a self-contained wheeled tractor scraper both self loading or assisted by crawler tractors or other scrapers. Used to excavate and transport earth or other materials. May oil, grease or otherwise service and make necessary adjustments to equipment as needed. Performs other related duties.

Servicer
Drives a truck, which carries various fuels, oils, greases and filters. Must have knowledge of and is responsible for the correct oiling and greasing and changing of filters on equipment according to the manufacturers' specifications. Uses compressed air grease guns, wrenches and other tools. May make adjustments to clutches, brakes and other mechanical items. Keeps record of service preventive maintenance records. May have laborer assisting him. May require CDL if driving truck on public highways. Performs other related duties.

Sign Installer (PGM)
Sets forms, reinforcing steel, anchor bolts and pours concrete for Sign foundations. Fabricates and erects pipe and angle Frameworks by bolting, welding or other means prior to installation of signs that are normally prefabricated. Works from plans in location and drilling holes for proper location and alignment of signs. May direct hoisting of signs into place. Fastens signs to framework by bolting and other means. Locates and sets lighting brackets. May perform other work associated with signing projects. Supervises sign erector helper. Performs other related duties.

Slip Form Machine Operator
Cleans and seals joints requiring a hot or cold sealing compound in concrete paving, sidewalks, driveway and approach slabs. May oil, grease or make necessary repairs adjustments to equipment as needed. Performs other related duties.

Spreader Box operator
Operates spreader box by adjusting hopper and strike off blade so that the gravel, stone or other material may be spread to a specific depth on road surface during seal coat and surface treatment operations. May oil, grease or otherwise service and make necessary adjustments to equipment as needed. Performs other related duties.

Structural Steel Worker
Works from plans to lay out and install reinforcing steel within forms or in mats of concrete paving. May direct unloading of material. Determines rigging required to complete work. Gives direction to reinforcing steel worker (helper) or common or utility laborers. May install miscellaneous materials integral to concrete structure or paving. May work with power tools. Performs other related duties.

Tractor operator, Crawler Type
Operates a crawler tractor with a bulldozer mounted in front of chassis to level, distribute and push earth or other material. May operate a ripper attachment to break up rock or other hard material. May use a push block on front of tractor to push load scrapers. May oil grease, or otherwise service and make minor repairs to equipment as needed. Performs other related duties.

Tractor Operator, Pneumatic
Operates a gasoline or diesel powered agricultural tractor that tows compaction rollers, plow, disc. water tanks, scrapers and other similar operations. May use other miscellaneous attachments. May oil. Grease or otherwise service and make necessary adjustments to equipment as needed. Performs other related duties.

Traveling Mixer Operator
Drives a gasoline or diesel truck upon which is mounted a concrete mixer. Operates concrete mixer and dumps concrete on the grade, into forms or into concrete pumps or buckets. Cleans mixer drum. May require CDL license for on highway use. May service and make necessary adjustments for proper operation of equipment. Performs other related duties.

Truck driver, lowboy-Float
Drives a heavy-duty diesel powered truck to which is attached a trailer upon which heavy equipment is hauled. Driver is often required to operate heavy equipment to load or unload the lowboy. May require CDL license for on highway use. May service and make necessary adjustments for proper operation of equipment. Performs other related duties.

Truck driver, Single Axle, Heavy
Drive a light capacity truck for transporting loads of construction material. The truck is of single rear axle type, may have various kinds of beds attached, such as dump, flat bed, tank, etc. May require CDL license for driving on highway. May services and make necessary adjustments for proper operation equipment. Performs other related duties.

Truck driver, Single Axle-Light
Drive a light capacity truck for transporting loads of construction material. The truck is of single rear axle type, may have various kinds of beds attached, such as dump, flat bed, tank, etc. May require CDL license for driving on highway. May services and make necessary adjustments for proper operation equipment. Performs other related duties.

Truck Driver, Tandem Axle, Semi-Trailer
Drives a diesel-powered tractor pulling a semi trailer hauling materials. Hauls dirt, rock, aggregates or other material. May require CDL license for driving on highway. May service and make necessary adjustments for proper operation of equipment. Performs other related duties.

Work Zone Barricade Servicer
Fabricates, erects and maintains temporary traffic control devices, including arrow boards, signs, barricades, channelizing devices, barrels and all message boards. May operates a truck during traffic control operations.

WELDERS - Receives rate for craft being performed to which welding is incidental.

Document 00830

TRENCH SAFETY GEOTECHNICAL INFORMATION

1.0 DOCUMENT INCLUDES

A. Trench Safety Geotechnical Information: Geotechnical information obtained for use in design of the trench safety system is included as an attachment to this document.

2.0 RELATED DOCUMENTS

A. Section 02260 - Trench Safety Systems.

END OF DOCUMENT

CITY OF HOUSTON,
WHITE HEATHER DRAINAGE AND PAVING SUB-PROJECT IV
WBS NO. M-000262-0004-3,
WHITE HEATHER, HOUSTON, TEXAS

OSHA TRENCH SAFETY RECOMMENDATIONS

Prepared for:

SES Horizon Consulting Engineers, Inc.
10101 Southwest Freeway, Suite 400
Houston, Texas 77074

Prepared by:

ATSER LP
Engineering and Environmental
1150 Richcrest Drive
Houston, Texas 77060

January 27, 2012

Report No.: 02-06-22391

ATSER

ATSER

1150 Richcrest Drive
Houston, TX 77060
281.999.9961
Fax. 281.999.9962
Firm TBPE F-39

Building on Real-Time Information

January 27, 2012

Mr. Epifanio Salazar, Jr. P. E.
SES Horizon Consulting Engineers, Inc.
10101 Southwest Freeway, Suite 400
Houston, Texas 77074

Telephone: 713-988-5504
Facsimile: 713-988-1441

REFERENCE: **OSHA Trench Safety Recommendations**
City of Houston, Whiteheather Drainage And Paving Sub-Project IV
Houston, Texas
WBS NO. M-000262-0004-3
ATSER Project No. 02-06-22391

Dear Mr. Salazar:

We are pleased to submit the OSHA trench safety recommendations for both open excavations as well as braced excavations for the above-referenced project.

We appreciate the opportunity to provide professional engineering services for this project. If we can be of further assistance, please do not hesitate to contact us at your convenience.

Sincerely,

ATSER LP
Engineering and Environmental
TBPE Firm Registration F-39

Suresh Gudavalli, P.E.
Project Engineer

STATE OF TEXAS
SURESH GUDAVALLI
104991
LICENSED
PROFESSIONAL ENGINEER

Chuck Shih, Ph.D.,
Material Engineer

OSHA Trench Safety Recommendations
City of Houston
Whiteheather Drainage And Paving Sub-Project IV,
WBS NO. M-000262-0004-3,
White Heather, Houston, Texas

1.0 INTRODUCTION

This report outlines our Trench Safety Recommendations for both open excavations as well as braced excavations for use solely within this project.

2.0 OBJECTIVE

Excavation operations for water line installations should essentially fulfill the following requirements:

- Excavation of soils to a depth allowing for pipeline installation must be performed and/or provided without causing any undue disturbance to the soil below the final excavation level intended to support the proposed structure/facilities in the project;

- Stability of the sides of the excavation must be maintained, during and after excavation, to avoid detrimental movement of the side walls;

- Prevent injury to pedestrians and workers, and damage to adjacent streets, structures and facilities, and vehicular traffic;

- Incorporate an effective dewatering program (where necessary) that will maintain the water level at least 3 feet, below the lowest excavation level during construction. The dewatering operations should be monitored such that there are no areas of detrimental subsidence as a result of dewatering; and

- Include a condition assessment of adjacent structures and facilities in close proximity, especially in areas of deep excavations, before, during and after excavation operations. The condition assessment should include the use of monitoring devices (e.g., inclinometers, levels, etc.) based upon the specific site conditions, adjacent structures, installation techniques and perceived risk.

3.0 EXCAVATION STABILITY

Excavations should be shored, benched or cut back to a stable slope or some other approved means should be used to provide safety for workers, pedestrians, vehicles and adjacent structures. Assessment of the need for sloping, use of trench boxes, shoring or other measures, in order to provide a stable excavation, and the use of appropriate construction practices and equipment is the Contractor's responsibility.

The following recommendations are intended to outline solutions to potential stability problems encountered in soil conditions within the project area and are made with reference to ***OSHA's Construction Standard for Excavations, 29 CFR Part 1926.650 through 1926.652, Subpart P – Excavations***, effective date March 5, 1990, as amended, including rules published in the *Federal Register, Vol. 54, No. 209*, dated October 31, 1989. In addition, the provisions of legislation outlined by the Texas Legislature and City of Houston should be satisfied. It is the responsibility of the Contractor to carry out a detailed design of the stability system intended for the project.

3.1 Excavations Less than 5 feet Deep

Based on the soil conditions revealed by the exploratory borings, all excavations shallower than five feet deep may be excavated, where no space constraints exist, with side slopes of 1½:1 (H:V). If there are any indications of sloughing during excavation, the side slopes should be flattened further. This should be assessed by the designated Competent Person (refer to *Part 1926.650 (b)*) on site. Also, excavations should be adequately protected when an indication of hazardous ground movement is anticipated. The Contractor should be prepared to carry out dewatering operations, should seepage of water into the excavation be observed.

3.2 Excavations Greater than 5 feet but Limited to 20 feet Deep

Excavations that are deeper than five feet should be shored, benched or cut back to a designed stable slope or stabilized by some other approved means, to provide safety against moving ground or caving, for workers, pedestrians, vehicles and adjacent structures.

Daily inspections of excavations, adjacent areas, and protective systems, shall be made by the designated Competent Person at least at the beginning, at mid-day and at the end of each working day, and more often as deemed necessary.

The recommended maximum allowable slopes and benches for excavations are summarized in TABLE 1, below:

TABLE 1 MAXIMUM ALLOWABLE SLOPES (MAXIMUM EXCAVATION DEPTH OF 20 FEET AND MAXIMUM WIDTH OF 15 FEET)

SOIL TYPE	OSHA STANDARD FIGURE REFERRED	RECOMMENDED MAXIMUM ALLOWABLE SLOPE
A	A-1.1	3/4(H) : 1 (V)
B	B-1.2	1(H) : 1 (V)
C	B-1.3	1½ (H) : 1(V)
Layered Soils	B-1.4	Depends on Soil Type encountered at each layer

NOTE *– Member sizes at spacings, other than those listed above are to be determined as specified in Part 1926.652 (c).*

The OSHA recommended pre-engineered shoring systems (metal hydraulic, timber or mechanical) for excavations are summarized in TABLE 2, below:

TABLE 2 MINIMUM SHORING REQUIREMENTS (MAXIMUM EXCAVATION DEPTH OF 20 FEET AND MAXIMUM WIDTH OF 15 FEET)

SOIL TYPE	OSHA STANDARD TABLE REFERRED (TIMBER SHORING)	OSHA STANDARD TABLE REFERRED (ALUMINUM HYDRAULIC SHORING)
B	C-1.2, C-2.2	D-1.2, D-1.3
C	C-1.3, C-2.3	D-1.4

***NOTE** – For applications other than those listed above, refer to Part 1926.652 (c) (2) and for excavation depths in excess of 20 feet, refer to Part 1926.652 (c) (2) and (c) (3).*

TABLE 3 summarizes the designated OSHA Soil Type(s) encountered at various depth intervals for each boring location.

TABLE 3 SUMMARY OF OSHA SOIL TYPE(S) AND DEPTH INTERVALS AT EACH BORING LOCATION FOR WHITE HEATHER SEGMENT II

BOREHOLES	RECOMMENDED OSHA SOIL TYPE	
	B	C
B-79, B-80, B-81, B-82, B-83, B-84, B-85, B-86, B-87, B-88, B-89, B-90, B-91, B-99, and B-100	0 to 6 feet	6 to 14 feet
P-4, P-5	0 to 6 feet	6 to 15 feet

3.3 Excavations Greater than 20 feet Deep (Including Height of Berm or Equivalent Surcharge)

Excavations greater than 20 feet in depth, including the height of berm or equivalent surcharge, require site specific engineered (signed) safety plans signed by a Professional Engineer. If these design recommendations are required, please contact us so that we can provide an appropriate fee proposal.

4.0 References

These recommendations are provided as part of ATSER's Report of Whiteheather Drainage And Paving Sub-Project IV, Houston, Texas, WBS. No. M-000262-0004-3, ATSER Project No. 02-06-22391.

Document 00840
(POP-1)

PAY OR PLAY PROGRAM

I. Pay or Play Program Elements

A. Purpose
Authorized by Ordinance 2007-534 and Executive Order 1-7, the purpose of the Pay or Play Program is (1) to create a more level playing field among competing contractors so that those who provide health benefits to their employees are not disadvantaged in the bidding process; and 2) to recognize and account for the fact that there are costs associated with the health care of the uninsured.

B. Program Elements

1. Covered contracts: Contracts covered by the program are those that are advertised after July 1, 2007, which are valued at or above $100,000 and are not primarily for the procurement of property, goods, supplies or equipment.

2. Covered employees: This program applies to employees of a covered contractor or subcontractor, including contract labor, who are over age 18, work at least 30 hours per week <u>and</u> work any amount of time under a covered city contract or subcontract.

3. Compliance with the program means that the contractor either:
   - "Pays" by contributing $1.00 per covered employee per hour for work performed under the contract with the City; or
   - "Plays" by offering health benefits to covered employees. Health benefits must meet or exceed the following standards:
     - The employer will contribute no less than $150 per covered employee per month toward the total premium cost.
     - The employee contribution, if any amount, will be no greater than 50% of the total monthly premium cost.

4. Subcontracts: The prime contractor is responsible for compliance on behalf of covered employees, including contract labor, of subcontractors with subcontracts valued at or greater than $200,000, if the subcontract is not primarily for the procurement of property, goods, supplies or equipment. Subcontractor compliance includes submission of applicable reports and/or payments to the prime, as well as maintenance of records.

5. Exemptions/Waivers: The City of Houston will award a contract to a contractor that neither Pays nor Plays only if the contractor has received an approved waiver.

6. Administration: Contractor performance in meeting Pay or Play program requirements will be managed by the contracting department. The Office of Business Opportunity will have administrative oversight of the program, including audit

responsibilities. Questions about the program should be referred to the department POP Liaison or the Office of Business Opportunity.

II. Documentation and Reporting Requirements

A. Documents that must be signed and returned to administering department within a period designated by the department's Contract Administrator, upon notification of low bidder or successful proposer status:

1. Certification of Contractor's Intent to Comply with Pay or Play Program (Document 00630). Note - Contractors that opt to "play" must provide proof of coverage, including documentation from insurance provider, and names of covered employees.

2. List of Participating Subcontractors (Document 00631)

B. The contractor will comply with the following reporting requirements:

1. Contractors that opt to Play
   Provide periodic reports to the contract administrator showing proof of coverage. Reporting schedule will be determined by administering department based on length of contract. Reports shall be provided in a Microsoft Excel format on a CD-Rom.

2. Contractors that opt to Pay
   Provide monthly reports to administering department, detailing names of employees, hours worked, exemptions (if any) and amount owed. Reports shall be provided in a Microsoft Excel format on a CD-Rom.

Contractors shall submit an initial report with the second invoice to the department. Reports shall be provided in a Microsoft Excel format on a CD-Rom in the form attached as page 3 of this document. Payments based on monthly reports are due to the contracting department with submission of the following month's invoice. Payments may be made via wire transfer, provided that proof of transaction is submitted to administering department.

III. Compliance and Enforcement

The Office of Business Opportunity will audit program compliance. Contractors willfully violating or misrepresenting POP program compliance will be subject to corrective and/or punitive action, including but not limited to the assessment of fines and penalties and/or debarment.

Document 00931

REQUEST FOR INFORMATION

1. PROJECT No.: [*GFS/CIP/AIP/File No.*]_____

2. RFI No.: _____

3. PROJECT NAME: [*Legal Project Name*]_____

4. CONTRACTOR: [*Contractor's Company Name*]_____

5. CONTRACT No.: _____

6. SPECIFICATION Nos.: _____

7. DRAWING Nos.: _____

8. RESPONSE CODE: [_] CRITICAL [_] ROUTINE 9. DATE RESPONSE REQUIRED: _____

10. INFORMATION REQUIRED:

11. _____ _____
CONTRACTOR (Signature) TITLE DATE

12. RESPONSE:

13. _____ _____
PROJECT MANAGER (Signature) DATE

14. If Contractor believes the response given in Item 12 requires an adjustment in Contract Price or Contract Time, Contractor shall submit a timely proposal so as not to delay Contractor's Work in accordance with General Conditions, Article 7 - Changes in the Work.

END OF DOCUMENT

Section 01110

SUMMARY OF WORK

PART 1 G E N E RAL

1.01 SECTION INCLUDES

A. Summary of the Work includes work covered by contract documents, cash allowances, alternates, city-furnished products, work sequence, contractor use of premises, street cut ordinance, warranty and additional conditions for substantial completion.

1.02 WORK COVERED BY CONTRACT DOCUMENTS

A. Definitions

Work of the Contract is for the construction of Whiteheather Drainage And Paving Sub-Project IV project.

B. Project Scope

The project area is bounded by Wuthering Heights to the North, West Orem to the South, Landmark to the East and HCFCD C146-00-00 to the West.

The scope of work for this project includes the construction of a storm sewer trunk line system (size varies from 24" diameter reinforced concrete pipe to 48" diameter reinforced concrete pipe and the related 24" and 36" diameter outfalls, elliptical reinforced concrete pipe sizes of 38" X 24", 45" X 29", 60" X 38" and 68" X 43" are also utilized for this project). The proposed storm sewer system will include new manholes and inlets. The existing concrete pavement structure material and concrete curbs will be removed (back of curb to back of curb) and replaced with a concrete pavement type structure and new concrete curbs (same width as existing pavement). The existing 4", 6", 8" and 12" diameter water lines within the project area will be replaced and/or abandoned with new 6", 8" and 12" diameter water lines. The proposed water line system includes an 8" diameter aerial crossing and a 12" diameter aerial crossing over HCFCD C146-00-00. The proposed storm sewer installation will require water line and sanitary sewer line horizontal and vertical adjustments as required. The project also includes a driveway, sidewalk and sidewalk ramp construction. The existing traffic signal system at Whiteheather and West Orem will be removed and replaced.

The existing traffic signal strain poles for EB & WB Orem at White Heather are located outside of the proposed paving limits. Therefore, the existing traffic signal is to remain operational during construction and a temporary traffic signal is not expected as part of this project. The only conflict the existing traffic signal strain poles have with the proposed construction is the existing strain poles on north side of WB Orem at White Heather are located where proposed pedestrian curbs ramps are to be located. Due to this conflict, these curb ramps will need to be constructed after the existing traffic signal installation is removed, which will occur after the proposed traffic signal is operational. Install proposed traffic signal poles, pedestal poles, vehicle signal heads, accessible pedestrian signals, saw-cut loop detectors, signs, preemption, electrical service, traffic signal controller, ground boxes, conduit and traffic signal cable according to City of Houston Standards and Specifications. For traffic signal conduit beneath proposed pavement, install conduit prior to pouring the pavement in order to avoid boring. Once the proposed traffic signal is ready to be turned on, the existing traffic signal installation will be turned off and removed according to City of Houston Standards and Specifications.

New construction items also include: existing concrete slope paving and concrete low flow channel removal and replacement for outfall construction, storm water pollution prevention plan measures, traffic control measures, pavement stripes/buttons, open cut trench protection, tree protection and preservation, landscape and hardscape protection, landscape and hardscape preservation and/or replacement, sodding and seeding. The storm sewer and sanitary sewer post installation testing and television inspection requirements are incidental to all other storm sewer and sanitary sewer pay items.

All existing and/or proposed water meters and water valves that are situated within the existing and/or proposed sidewalks, will be relocated outside of the existing and/or proposed sidewalks.

Items from the water line to be abandoned such as valves and fire hydrants, that are being removed and salvaged shall be delivered by the contractor to the COH PWE Utility Maintenance Southwest Quadrant (7101 Renwick). The contractor is required to contact Mr. Hulisher Hornsby at 832-395-4619 for delivery and unloading arrangements.

Private landscaping features, conduits, or other facilities may be present between the back of curb and the right of way lines. Contractor shall coordinate with the property owner as to the location and operation of these facilities a minimum of 72-hours prior to construction. Contractor shall use caution while working in proximity of these facilities so as to avoid impacts.

Repair or replacement necessitated by construction activities will be the contractor's responsibility at no cost to the City of Houston.

The contractor must restore existing irrigation systems (including spray and rotary heads and related piping), within the right-of-way, made inoperable by construction activities, to a condition equal to or better than prior to initiating construction. There will be no separate pay item for this restoration - incidental to all other pay items. Verify operation of the irrigation system with the property owner prior to construction.

The installation of temporary mailboxes, or the removal, relocation and/or replacement of existing mailboxes is incidental to all other pay items.

The flexible base course for temporary driveways will be installed and paid for by using City of Houston Standard Specification Section 02714 – Flexible Base Course For Temporary Driveways. The temporary pavement material required at street intersections will be installed and paid for by using City of Houston Standard Specification Section 02741 – Asphaltic Concrete Pavement.

Pavement work does not include replacement of existing "decorative" or "specialty" sidewalks, walkways or driveways built with non-standard materials or finishes. Existing sidewalks, walkways and driveways shall be replaced with standard concrete materials and finishes within the existing City of Houston street right of way.

Driveway elevations on plans represent the elevation of the driveway at the right of way. Driveways reconstructed past the right-of-way will match existing driveway width and elevation to meet necessary driveway grade requirements. Refer to Street and Bridge Plan Detail Sheets and Driveway Schedule And Details Sheet for additional information.

Restore existing through-curb yard drains. Work includes connection of new PVC pipe to the existing drain pipe at the right-of-way (make watertight connection) and extending the new pipe through the proposed curb.

The contractor is required to preserve and protect all of the existing private fences within the project area, during all construction activities for this project. All private fence damage made by the contractor is to be repaired and/or replaced to existing or better condition as indicated by pre-construction photographs and final approval and acceptance made by the City of Houston Construction Project Manager. The costs related to this preservation and protection directive are at no cost to the City of Houston.

Existing private fences that are removed and replaced as directed in the construction documents for this project include chain link fences, wooden fences and wrought iron fences. There is a pay item in Document 00410-Bid Form, for these fence removal and replacements – final acceptance of the new fences will be made by the City of Houston Construction Project Manager.

The contractor is required to preserve and protect all of the existing private car ports and car port structures within the project area, during all construction activities for this project. All private car ports and car port structure damage made by the contractor is to be repaired and/or replaced to existing or better condition as indicated by pre-construction photographs and final approval and acceptance made by the City of Houston Construction Project Manager. The costs related to this preservation and protection directive are at no cost to the City of Houston.

The existing speed humps within the project limits will be removed and replaced with speed cushions. The proposed speed cushions will be installed by the contractor. The speed cushion material and installation requirements will be purchased by the contractor and materials provided by Roadkare (www.roadkare.com – Road Kop Type Cushion, 800-942-9305) or approved equal.

Low profile concrete barriers may be required at the outfall locations during the outfall installation and/or street removal and replacement.

HCFCD C146-00-00 will serve as the outfall facility for this project. HCFCD C146-00-00 is an existing concrete low flow channel with concrete slope paving. HCFCD C146-00-00 is operated and maintained by the City Of Houston and not the HCFCD, hence there are no HCFCD construction permits nor inspection procedures required for this project. HCFCD standard specifications and pay items will be utilized by the contractor for the removal and replacement of the existing concrete low flow channel and the existing concrete slope paving.

The contractor is required to comply with the following when working near (Whiteheather and West Orem) large diameter water lines (24-Inch and Larger):

1. Contact Sandeep Aggarwal at (832) 395-3858 at least 48 hours before construction. The work can only take place during the City's low water demand period (November to March) and requires extensive coordination with the Public Utility Division.

2. Perform critical locate of water line in accordance with COH Specification 02317 using a non-probing, non-water jetting method of vacuum excavation.
3. For utilities parallel to large diameter water lines provide a minimum horizontal clearance equal to one pipe diameter of the water line (four feet minimum) between the outside of the water line and the proposed utility.
4. For utilities crossing large diameter water lines bores shall be of dry-bore construction, with wet boring not allowed within one pipe diameter of the water line (four feet minimum).
5. When utilizing bore construction, provide a minimum of four feet vertical clearance between the outside of the water line and the proposed utility.
6. When utilizing open-cut construction, provide a minimum of two feet vertical clearance between the outside of the water line and the proposed utility. Contractor is limited to hand excavation within four feet vertically and horizontally of the water line.
7. No construction related activities including, but not limited to, loading of dump trucks and material staging or storage are to be performed on top of existing large diameter water lines.

Construction Phases:
The traffic control plan (TCP) and construction sequencing requirements for this project are that a 9.0' emergency lane be provided and maintained while working within the project area. The contractor is required to work in a 200' area for pavement removal and utility installation at one time. The contractor is required to initiate full width paving once 600' of pavement is disturbed (one location at a time within a TCP Phase). This project will be constructed in phases and the contractor is required to substantially complete (based on COH Inspectors approval) one entire TCP Phase before moving on to the next TCP Phase. The contractor is required to inform all parties (residents, HPD, HFD, HISD, METRO, etc..) impacted by planned construction, a construction memo notice and related traffic control planning information, a minimum of 48 hours prior to any planned construction activity. There are some locations within the project area that will require short term local street detours since a 9.0' emergency lane can not be provided due to existing street widths, existing street right of way and existing versus proposed utility locations.

The contractor is required to install the proposed water line system and related service connections, prior to all conflicts between the existing water line system and the proposed storm sewer system in an effort to avoid disruption of water service where the existing water line will be cut, plugged and abandoned, at conflicts with the proposed storm sewer trunk system and/or leads.

Water line service to Madison High School and Hobby Elementary is required at all times during normal school hours, unless approved for short term disruptions by the COH PWE Construction Project Manager.

The contractor is required to construct the West Orem, Whiteheather, Beran, Landmark and Wuthering Heights streets that are adjacent to HISD – Hobby Elementary School, HISD - Madison High School, COH PARDS Brentwood Park and Brentwood Church, in phases/quadrants at a time to insure that not more than one lane of traffic is closed at a time at each intersection. All street intersections related to the streets above, must be constructed with the use of an HPD off-duty police officer to assist in traffic control. This area will be constructed using high early strength concrete. The contractor is required to construct the streets referenced above during the Holiday (Thanksgiving, Christmas and Spring) and Summer Break sessions indicated in the HISD 2011-2012 and HISD 2012-2013 Academic Calendars (copies of HISD Academic Calendars are attached in this Project Manual).

The contractor is required to coordinate all planned construction activity with METRO in an effort to maintain the existing ingress/egress bus route stops on Whiteheather, West Orem and adjacent project streets.

The contractor is required to remove, preserve, relocate and/or replace all existing street name and all existing traffic signs within the project area if they are impacted by construction. The contractor will provide sign replacement, pole anchors and all related hardware for all signs. The costs related to this preservation and protection directive are at no cost to the City of Houston.

This project is considered a Large Construction Activity (5 or more acres disturbed) as defined in the City of Houston Standard General Requirement, Section 01410 – TPDES Requirements which requires documentation that is prepared and signed by the contractor before conducting construction operations, in accordance with the Texas Pollutant Discharge Elimination System (TPDES) Construction General Permit Number TXR 150000 issued March 5, 2003 (the Construction General Permit).

Existing Private Utilities: The existing utilities within this project area include; Centerpoint Energy - Gas, Centerpoint Energy - Electric, Centerpoint Energy – Street Light Conduit, Comcast, AT&T and SW Bell Telephone. Other utilities may exist that were installed after survey and plan completion of the above referenced project.

All existing utilities are shown in an approximate location only; the contractor should verify the location and depth prior to construction. The depth of

existing utilities were not probed, hence the depth of the existing utilities indicated on the plans are not field verified.

C. Construction

The auger construction method will be used for water line and wastewater line construction unless otherwise shown on the construction drawings, Project Manual and/or instructed by the City Engineer. Whenever possible, the contractor shall make an effort to locate auger pits away from existing concrete or asphalt pavement, sidewalks, driveways, fences, culverts, inlets, manholes, power poles, light poles, trees, lawns, landscapes and existing structures. No auger pits are allowed within driveways, canopy of 6-inch or larger trees or landscapes unless otherwise instructed by the City Engineer.

D. Coordination

Construction of any portion of this project on the streets adjacent to existing worship facilities, schools, businesses and parks, will require a minimum of 72 hour notification to inform and coordinate construction activity and ingress/egress logistics with each entity. Uniformed Peace Officer must be employed for traffic control for work on these streets.

The following entities are situated within the project area and will require coordination by the contractor as indicated above:

METRO
Tangee Mobley
Senior Director Of Transportation
(713) 615-7229

HISD, HOBBY ELEMENTARY SCHOOL
4021 Woodmont
Ivalyn C. Patterson, Principal
Roberto Lerma
(713) 434-5650

HISD, MADISON HIGH SCHOOL
13719 Whiteheather
Sonja Williams, Principal
Anthony Madry
(713) 433-9801

BRENTWOOD BAPTIST CHURCH
13033 Landmark Drive
Dr. Joe Samuel Ratliff
Kevin Williams
(713) 852-1400

ODY'S AUTOS
4030 West Orem
Fredi De La Paz
(713) 433-8960

E. Tree Protection

Contractor is responsible for obtaining all tree removal permits prior to any tree removals that are not included in the Tree Preservation and Tree Planting Plans, that are components of the construction documents for this project. The permit can be obtained by contacting Mr. Victor Cordova with the City of Houston Department of Parks and Recreation at (832) 395-8454 and/or Dale Temple at (832) 395-8459.

The tree removal permit provided to the contractor by the City of Houston prior to construction, will only be issued for the trees listed in the drawings.

Notify City of Houston Parks and Recreation Department representative Mr. Victor Cordova, City Forester, at (832) 395-8454, at least two (2) weeks in advance of clearing and cutting any tree.

Contractor shall adhere to the requirements of Document 01562 "Tree and Plant Protection" and Document 02915 "Tree Planting".

Contractor must refer to the "Tree Protection Plan" provided in the set of construction drawings.

F. Geotechnical Investigation/Categorical Exclusion for Soil Conditions

Bidder(s) must evaluate in it's entirety and take into account the soil conditions for the successful implementation of the work as per the Geotechnical Report. The Compact Discs (CD) of the Geotechnical and ESA Reports are provided with the bid documents at the first floor lobby of 611 Walker Street, Houston, TX 77002.

G. Field Office

1. Field Office is required in this project.

The field office and project identification signs will be considered incidental to mobilization.

H. General Notes

1. The flow lines and locations of all underground utilities must be located by whatever means may be required (metal detection equipment, probes, excavation, survey, coordination with utility companies) by the contractor prior to construction. All field verification work shall be completed prior to excavation for proposed utilities. No separate pay; include cost in unit price for work in appropriate sections.

2. Services are to be transferred between existing and proposed water lines with minimum disruption of service. Existing water lines must be maintained in service until service transfer is done.

3. Call the Traffic Management and Maintenance Division of the City of Houston Public Works and Engineering Department when work is scheduled near signal conduits within the City of Houston (713) 837-7280. Call at least five working days in advance. The Contractor shall be responsible for any damages to existing traffic signal cables as a result of construction activities for the project. No separate payment for repair to signal conduit. The contractor is required to coordinate all of the construction activity at existing traffic signals with the traffic control plans for this project.

4. Service line installation could be hindered by the cement stabilized sand backfill. Include cost of crossing cement stabilized backfill if encountered during service line installation in the unit price of services.

5. Contractor shall coordinate ahead of time with business owners and residents for installation of proposed utilities, proposed pavement, proposed driveways and all other planned improvements that are components of this project in encroached areas of the public right-of-way. No separate pay.

6. The contractor shall note that the Project ID Signs and all required saw cutting are incidental to the various bid items within Document Number 00410.

1.03 CASH ALLOWANCES

A. Include the following specific Cash Allowances in Contract Price under provision of General Conditions Paragraph 3.11:

1. Street Cut Permit. The contractor will be required to apply and receive all required street cut permits from the City of Houston. The fees associated with these permits will be reimbursed to the contractor as a cash allowance.

2. Street Light – The contractor will be responsible for installing street light conduit per included Centerpoint Energy (CNP) specifications in areas identified on the street lighting plans. Contractor is to provide conduits, conduit plugs, and all other materials not furnished by CNP. Additionally the contractor is to install conduit stub-up's at the proposed streetlight locations as well as conduit stub-up's at the wood poles where the streetlight sources are proposed. The pull boxes and warning tape can be provided by CNP when a 45 day noticed is received. The contractor is also responsible for the removal of any existing streetlight foundations. CNP will be responsible for removing existing street light poles. The contractor shall coordinate with Adrian Moreno (713-945-6274) of CNP Lighting Design Section including scheduling and removal and installation of street lights and inspection of the conduit and pull boxes. All materials and labor to perform and install this work, is to be paid on a linear foot basis, as shown in Document 00410-Bid Form, Parts A & B. In addition, a cash allowance is included for the removal of existing street light and installation of new street light as indicated in the plans. Pull box installation costs are considered incidental to street light conduit pay items.

1.04 ALTERNATES

A. Not Applicable.

1.05 CITY FURNISHED PRODUCTS

A. Items Furnished by City for Installation and Final Connection by Contractor: None

B. Contractor's Responsibilities:

1. Contractor will supply all new construction materials as outlined in Schedule of Unit Prices Work, Document 00410.

2. Arrange and pay for product delivery at site.

3. Receive and unload products at site, jointly with City, inspect for completeness and damage.

4. Handle, store, install and finish products

5. Repair or replace damaged items

6. A service connection tap shall be provided for each existing water meter. The contractor shall not install service leads for vacant lots. Call Substitute Services Coordinator at 713-837-0990 before installing service leads for abandoned structures with or without meters.

1.06 WORK SEQUENCE

A. Construct Work according to the work sequence phases provided in the construction drawings. The Construction Phase Layout includes Phase I, Phase II, Phase III, Phase IV, Phase V and Phase VI. Coordinate construction schedule and operations with Project Manager. Refer to Document 01325 – Construction Schedule for specific details.

B. In the absence of construction phases, Contractor to submit sequence of construction work for review and approval by Project Manager before commencing construction.

C. Coordination of the Work: Refer to Section 01312 - Coordination and Meetings.

1.07 CONTRACTOR USE OF PREMISES

A. Comply with procedures for access to the site and Contractor's use of right-of-way as specified in Section 01145 - Use of Premises.

B. Maintain local driveway access to residential and commercial properties adjacent to work areas. Provide temporary driveway access to driveways in accordance with section 01555 and section 01145. Coordinate with business owners and residents.

C. Construction Operations are limited to City's right-of-way provided by the City and areas shown or described in the Contract documents.

D. The City's Utility Maintenance Division is not bound to assist the contractor in locating existing water mains during construction.

Effort shall be given to locate proposed water valve and fire hydrants from flow lines of roadside ditches.

The existing utility lines with less then 4-inch in diameter are not shown on the profile of design drawings but they do exist as per plan and contractor shall prelocate as required.

E. Utility Outages and Shutdown: Provide notification to the City and private utility companies (when applicable) a minimum of 48 hours, excluding weekends and holidays, in advance of required utility shutdown. Coordinate all work with the City as required.

Contractor shall contact utility coordinating committee at (713) 223-4567 or 1-800-669-8344 a minimum of 48 hours prior to construction to field locate utilities.

1.08 STREET CUT ORDINANCE

A. Excavations on or under pavement in the City's right-of-way must have a permit. Comply with City of Houston, Texas Ordinance No. 2000-1115, an ordinance amending Chapter 40 of the Code of Ordinances, Houston, Texas, relating to excavating in the Public right-of-way and comply with amendments provided by Texas Ordinance No. 2006-0595.

B. Comply with the latest edition of street cut pavement repair and pavement replacement details.

C. Quantities are included for street cut pavement repair and replacement in applicable specification sections for unit price contracts.

D. Include payment for street cut pavement repair and replacement in lump sum bid for stipulated price contracts.

1.09 WARRANTY

A. Comply with warranty requirements in accordance with Document 00700 - General Conditions.

1.10 ADDITIONAL CONDITIONS FOR SUBSTANTIAL COMPLETION

A. In addition to requirements outlined in Document 00700 – General Conditions, for Contractor to be substantially complete with the Work and call for inspection by Project Manager to confirm, the following conditions must be met or completed.

1. All pay items complete report.

2. Contractor shall contact Construction Project Manger to complete Texas Department of Licensing and Regulation (TDLR) Post Construction Inspection of pedestrian elements for Texas Accessibility Standards. The TDLR inspection fee will be paid by the City of Houston's Design Consultant for this project.

3. All safety related work including pavement stripping, signing and signalization.

4. All testing shall be completed and accepted by the COH PWE Construction Project Manager.

5. All safety related systems and equipment shall be installed, accepted by the manufacturer's representative and approved for use.

B. No additional condition described in Paragraph 1.10 may be included in Contractor's punch list.

PART 2. P R O D U C T S - Not Used

PART 3. E X E C U T I O N - Not Used

END OF SECTION

2011-2012 Academic Calendar

Houston Independent School District

JULY 2011

S	M	T	W	T	F	S
					1	2
3	4	5	6	7	8	9
10	11	12	13	14	15	16
17	18	19	20	21	22	23
24	25	26	27	28	29	30
31						

AUGUST 2011

S	M	T	W	T	F	S
	1	2	3	4	5	6
7	8	9	10	11	12	13
14	15	16	17	18	19	20
21	22	23	24	25	26	27
28	29	30	31			

SEPTEMBER 2011

S	M	T	W	T	F	S
				1	2	3
4	5	6	7	8	9	10
11	12	13	14	15	16	17
18	19	20	21	22	23	24
25	26	27	28	29	30	

OCTOBER 2011

S	M	T	W	T	F	S
						1
2	3	4	5	6	7	8
9	10	11	12	13	14	15
16	17	18	19	20	21	22
23	24	25	26	27	28	29
30	31					

NOVEMBER 2011

S	M	T	W	T	F	S
		1	2	3	4	5
6	7	8	9	10	11	12
13	14	15	16	17	18	19
20	21	22	23	24	25	26
27	28	29	30			

DECEMBER 2011

S	M	T	W	T	F	S
				1	2	3
4	5	6	7	8	9	10
11	12	13	14	15	16	17
18	19	20	21	22	23	24
25	26	27	28	29	30	31

JANUARY 2012

S	M	T	W	T	F	S
1	2	3	4	5	6	7
8	9	10	11	12	13	14
15	16	17	18	19	20	21
22	23	24	25	26	27	28
29	30	31				

FEBRUARY 2012

S	M	T	W	T	F	S
			1	2	3	4
5	6	7	8	9	10	11
12	13	14	15	16	17	18
19	20	21	22	23	24	25
26	27	28	29			

MARCH 2012

S	M	T	W	T	F	S
				1	2	3
4	5	6	7	8	9	10
11	12	13	14	15	16	17
18	19	20	21	22	23	24
25	26	27	28	29	30	31

APRIL 2012

S	M	T	W	T	F	S
1	2	3	4	5	6	7
8	9	10	11	12	13	14
15	16	17	18	19	20	21
22	23	24	25	26	27	28
29	30					

MAY 2012

S	M	T	W	T	F	S
		1	2	3	4	5
6	7	8	9	10	11	12
13	14	15	16	17	18	19
20	21	22	23	24	25	26
27	28	29	30	31		

JUNE 2012

S	M	T	W	T	F	S
					1	2
3	4	5	6	7	8	9
10	11	12	13	14	15	16
17	18	19	20	21	22	23
24	25	26	27	28	29	30

Key

- Holidays
- Teacher Service Days
- Teacher Preparation Days
- Make-up Days (if needed)

Holidays

September 5, 2011	Labor Day
September 29, 2011	Fall Holiday
November 23-25, 2011	Thanksgiving
December 19, 2011-January 2, 2012	Winter Break
January 16, 2012	Martin Luther King Jr. Day
March 12-16, 2012	Spring Break
April 6, 2012	Spring Holiday
May 28, 2012	Memorial Day

Significant Dates

TBD	New teacher inservice
August 15, 2011	Teachers report to duty
August 22, 2011	First day of school
December 16, 2011	Last day of first semester
January 3, 2012	First day of second semester
May 31, 2012	Last day of school
June 1, 2012	Last day for teachers

April 6 and May 28, 2012 are make-up days

Prekindergarten Grading Periods

		Report Card Dates
Aug 22-Nov 4	53 Days	November 11 (Friday)
Nov 7 - Feb 17	60 Days	February 24 (Friday)
Feb 20 - May 31	67 Days	May 31 (Thursday)

Grading Periods

6 Cycles		Report Card Dates
Aug 22-Sep 30	28 Days	October 7 (Friday)
Oct 3 - Nov 4	25 Days	November 11 (Friday)
Nov 7 - Dec 16	27 Days	January 6 (Friday)
Jan 3 - Feb 17	33 Days	February 24 (Friday)
Feb 20 - Apr 5	29 Days	April 13 (Friday)
Apr 9 - May 31	38 Days	May 31 (Thursday) ES / MS June 8 (HS) Friday

4 Cycles		
Aug 22-Oct 14	38 Days	October 21 (Friday)
Oct 17 - Dec 16	42 Days	January 6 (Friday)
Jan 3 - Mar 9	48 Days	March 23 (Friday)
Mar 19 - May 31	52 Days	May 31 (Thursday) ES / MS June 8 (HS) Friday

2012-2013 Academic Calendar

Houston Independent School District

JULY 2012

S	M	T	W	T	F	S
1	2	3	4	5	6	7
8	9	10	11	12	13	14
15	16	17	18	19	20	21
22	23	24	25	26	27	28
29	30	31				

AUGUST 2012

S	M	T	W	T	F	S
			1	2	3	4
5	6	7	8	9	10	11
12	13	14	15	16	17	18
19	20	21	22	23	24	25
26	27	28	29	30	31	

SEPTEMBER 2012

S	M	T	W	T	F	S
						1
2	3	4	5	6	7	8
9	10	11	12	13	14	15
16	17	18	19	20	21	22
23	24	25	26	27	28	29
30						

OCTOBER 2012

S	M	T	W	T	F	S
	1	2	3	4	5	6
7	8	9	10	11	12	13
14	15	16	17	18	19	20
21	22	23	24	25	26	27
28	29	30	31			

NOVEMBER 2012

S	M	T	W	T	F	S
				1	2	3
4	5	6	7	8	9	10
11	12	13	14	15	16	17
18	19	20	21	22	23	24
25	26	27	28	29	30	

DECEMBER 2012

S	M	T	W	T	F	S
						1
2	3	4	5	6	7	8
9	10	11	12	13	14	15
16	17	18	19	20	21	22
23	24	25	26	27	28	29
30	31					

JANUARY 2013

S	M	T	W	T	F	S
		1	2	3	4	5
6	7	8	9	10	11	12
13	14	15	16	17	18	19
20	21	22	23	24	25	26
27	28	29	30	31		

FEBRUARY 2013

S	M	T	W	T	F	S
					1	2
3	4	5	6	7	8	9
10	11	12	13	14	15	16
17	18	19	20	21	22	23
24	25	26	27	28		

MARCH 2013

S	M	T	W	T	F	S
					1	2
3	4	5	6	7	8	9
10	11	12	13	14	15	16
17	18	19	20	21	22	23
24	25	26	27	28	29	30
31						

APRIL 2013

S	M	T	W	T	F	S
	1	2	3	4	5	6
7	8	9	10	11	12	13
14	15	16	17	18	19	20
21	22	23	24	25	26	27
28	29	30				

MAY 2013

S	M	T	W	T	F	S
			1	2	3	4
5	6	7	8	9	10	11
12	13	14	15	16	17	18
19	20	21	22	23	24	25
26	27	28	29	30	31	

JUNE 2013

S	M	T	W	T	F	S
						1
2	3	4	5	6	7	8
9	10	11	12	13	14	15
16	17	18	19	20	21	22
23	24	25	26	27	28	29
30						

Key

- Holidays
- Early Dismissal Days (2 1/2 hours early)
- Teacher Service Days
- Teacher Preparation Days
- Make-up Days (if needed)

Holidays

September 3, 2012	Labor Day
September 17, 2012	Fall Holiday
November 21-23, 2012	Thanksgiving
December 24, 2012-January 4, 2013	Winter Break
January 21, 2013	Martin Luther King, Jr. Day
March 11-15, 2013	Spring Break
March 29, 2013	Spring Holiday
May 27, 2013	Memorial Day

Significant Dates

TBD	New teacher inservice
August 20, 2012	Teachers report to work
August 27, 2012	First day of school
December 21, 2012	Last day of first semester
January 8, 2013	First day of second semester
June 6, 2013	Last day of school
June 7, 2013	Last day for teachers

March 29 and May 27 are make-up days

Prekindergarten Grading Periods

3 Cycles		Report Card Dates
Aug 22-Nov 9	53 days	November 16, 2012
Nov 12-Feb 22	60 days	March 1, 2013
Feb 25-Jun 6	67 days	June 6, 2013

Grading Periods

6 Cycles		Report Card Dates
Aug 27-Oct 5	28 days	October 12, 2012
Oct 8-Nov 9	25 days	November 16, 2012
Nov 12- Dec 21	27 days	January 11, 2013
Jan 8-Feb 22	33 days	March 1, 2013
Feb 25-Apr 12	29 days	April 19, 2013
Apr 15-Jun 6	38 days	June 6, 2013 ES/MS June 14, 2013 HS
4 Cycles		
Aug 27-Oct 19	38 days	October 26, 2012
Oct-22-Dec 21	42 days	January 11, 2013
Jan 8-Mar 22	48 days	March 28, 2013
Mar 25-Jun 6	52 days	June 6, 2013 ES/MS June 14, 2013 HS

TREE REMOVAL PERMIT

houston PARKS & recreation department

Permit #_____

Project #_____

City of Houston
Parks & Recreation Department
Urban Forestry
6501 Memorial Drive
Houston, Texas 77007
(713) 867-0379

White Heather Drainage and Paving
Sub Paving IV
M-000262-0004-4

Tree(s) requested for removal:

Species	Diameter	Quantity
Tree #1, 31, 51, 58-60, 63, 64, 223, 96, 97, 98, 123, 124, 139, 142, 145, 146, 150, 154, 159		
167, 168, 180, 191, 192, 195, 225, 235, 237, 238, 251, 252, 255, 259, 266, 268, 279,		
295, 296, 306, 308		

Address:_____

☑ Request **APPROVED**:

☐ Tree(s) is/are diseased, dead and/or dangerous

☑ Tree(s) will be removed to accommodate:
- ☐ Driveway
- ☐ Sidewalk
- ☐ Utility
- ☐ Other_____

☐ Request **DENIED**:

☐ Tree(s) is/are not diseased, dead and/or dangerous

☐ Construction plans can be modified to save tree(s)

☐ Tree(s) are arboriculturally significant

☐ Tree(s) is/are protected by ordinance (Chapter 33)

Mitigation:

Species	Diameter	Quantity
As per plans		

Notes:_____

Name: Issac Muniz

Company: PWE

Address:_____

Phone #:_____

Fax #:_____

Permit Expiration Date: 4-18-2013

APPROVED

City of Houston
Parks & Recreation Dept.
Urban Forestry Division
By: Dale Temple
Title: Superintendent Date: 4-18-12

Shelton Mitchell
Service Consultant
CenterPoint Energy

4700 S. Shaver St. #I
Houston, TX 77034
713 945 6231
Fax: 713 945 3773
Shelton.Mitchell@
CenterPointEnergy.com

April 4, 2012

Ms. Leaneice Brown
City of Houston
P.O, Box 1562
Houston, TX 77251

Subject: White Heather Drainage Project Phase 4 - Street Light Removal and Re-Installation
WBS No: M-000262-0003-4
Location: White Heather Drive and W Orem Drive

Dear Ms. Brown:

The *Streetlight Division* at CenterPoint Energy (CNP) has prepared a cost for the streetlights to be removed and re-installed at the subject location.

This cost is contingent upon the City of Houston's (COH) contractor installing approximately 7,990' of 2" PVC conduit and (12) pull boxes per CNP specifications. All conduit and pull boxes shall be installed using the conduit layout provided to you on 4/04/2012. Additionally the COH's contractor is to install conduit stub up's at the proposed streetlight locations as well as conduit stub up's at the wood poles where the streetlight power sources are proposed. The pull boxes and warning tape can be provided by CNP when a 45 day notice is received.

The total cost is **$37,886.00**

<u>The following is a breakdown of the above mentioned cost:</u>

Standard Removal Cost Only: $3,934.00
(20) – Removal of 13 – 100W HPS standard underground Streetlights
Removal of 6 – 250W HPS standard underground Streetlights
Removal of 1 – 150W HPS standard underground Streetlights
Removal of 4 street light terminal pole risers
***COH's contractor is responsible for the removal of any streetlight foundations.

Standard Installation Cost Only: $33,952.00
(36) – Installation of 13 Standard Streetlights 100W HPS that were removed and to be re-installed.
Installation of 7 Standard Streetlights 250W HPS that were removed and to be re-installed.
Installation of 13 Standard Streetlights 100W HPS, installed on COH's 6% allowance at no cost.
Installation of 3 Standard Streetlights 250W HPS, installed on COH's 6% allowance at no cost.
Installation cost for 4 streetlight terminal pole risers.

Please submit a separate check for the removal cost as that will be done prior to the installation.

Your signature below will be our acknowledgment of your acceptance to the above mentioned terms and conditions and associated charges. Also, a check for the above noted amount made payable to *CenterPoint Energy* will be required before CNP can proceed with the planned construction. Please send the check and the **original signed copy** of this agreement to my attention at: *CenterPoint Energy, 4700 S. Shaver – Bldg I. Houston, TX 77034.*

If there are any questions, please do not hesitate to contact me at (713) 945-6231. Please note this estimate is valid for a period of 180 days from the date of this agreement.

Thank You,

Shelton Mitchell

Shelton Mitchell
Senior Service Consultant
CenterPoint Energy

The above requirements are approved and accepted this

_____ Day of _____, 2012,

By _____ (Signature)

_____ (Printed name)

_____ (Title)

_____ (Company)

Digitally signed by Leaneice Brown, Project Manager
DN: cn=Leaneice Brown, Project Manager, o=City of Houston, ou=Street Lighting Section, email=leaneice.brown@houstontx.gob, c=US
Date: 2012.04.17 09:48:30 -05'00'

SPECIFICATION

FOR

INSTALLATION OF CONDUIT SYSTEM FOR THOROUGHFARE STREET LIGHTING

CenterPoint Energy
Distribution Engineering
P.O. Box 1700
Houston, Texas 77251

REFERENCE DRAWINGS:
004-237-16 Revision 4

REFERENCE STANDARDS:

NO.	DATE	ITEMS REVISED	BY	CH	APP
5	7-25-07	Revised for practical application	KTN	JCD	MMG
4	2-23-99	Added conduit run for high density area	KTN	JCD	LHH

CenterPoint Energy HOUSTON, TEXAS		
WRITTEN	9-13-90	N.T. Khanh
CHECKED	9-13-90	JCD / RKM
APPROVED	9-14-90	Robert Boucher
Sheet 1 of 16		

SPEC ID.		007	371	08

Table of Contents

Item No.	Title	Page No.
1.0	SCOPE	3
2.0	GENERAL	3
3.0	Material furnished by CNP	4
4.0	Pull-Box	5
5.0	Warning tape	5
6.0	Material furnished by the Customer	5
7.0	Conduits	6
8.0	Conduit install in bridge or elevated roadway	7
9.0	Conduit plugs	7
10.0	Liability	8
	Small Pull-Box	9
	Large Pull-Box	10
	Typical street light conduit layout	11
	Multiple conduit run street light foundation	12
	Street light conduit from manhole	13
	Typical terminal pole layout	14
	Conduits installed in bridge or elevation roadway	15
	Block-out for street light in concrete area	16

1.0 SCOPE

This Specification covers CenterPoint Energy (CNP) requirements concerning the installation of pull-boxes and conduits for underground electrical service to street lights. Number, size and direction of conduits to be specified on layout at CNP's discretion. Where there is a conflict between this specification and the CNP project drawing, the drawing will take precedence.

2.0 GENERAL

The following sub-articles state the general procedures to be followed for coordination of conduit system installation:

2.1 For City/County Contractor installed conduit: City/County Street Light Division shall approve proposed street light locations. City/County shall forward proposed locations to CNP. CNP shall design the conduit system and return design to City/County for contracting.

2.2 For Metro Contractor installed conduit: Metro shall forward construction drawings to COH Street Light Division for proposed street light locations. COH shall submit their approved locations to CNP. CNP shall design the conduit system and return design to COH. (For conduit to be located in utility or side lot easements, CNP will perform the work in conjunction with street light installation, with reimbursement from Metro).

2.3 CNP shall require, and note on drawings, when pull-boxes are required at the beginning and ending of each continuous conduit run, in addition to those areas where pull-boxes are currently required for crossings or distance.

2.4 CNP Street Light Engineering shall attend City/County/Metro utility coordinating meeting prior to the start of construction. The proposed conduit installation (as well as potential conflicts with existing CNP facilities) will be reviewed at that time.

2.5 In conjunction with the utility coordinating meeting, Contractor, CNP representative, Metro (if applicable) and City/County or other municipal representative shall review proposed light locations in the field.

2.6 Contractor will notify CNP Street Light Engineering, at least 2 (two) working days in advance, of Contractor's schedule for conduit installation. CNP Street Light Engineering will perform final inspections with Contractor present when all conduits had been installed.

2.7 Contractor shall attempt to determine if existing underground utilities or any other obstructions would prohibit CNP's installation of proposed new street lights. If such obstructions exist, Contractor may revise the proposed location of the light up to 5 feet in any direction within street right-of-way in order to avoid obstructions. For revised street light locations greater than 5 feet in any direction, Contractor must obtain prior approval as follows:

For projects being performed for City/County, Contractor shall notify the City Inspector, who will notify the City/County 's Public Works Department. Public Works will review the problem with the City's Street Light Division and CNP for approval of any changes. (In the case of municipalities other than City/County, Contractor shall notify City Inspector who shall notify appropriate Department of City. City shall consult with CNP for approval of any changes)

For projects being performed for Metro, Contractor must notify the Metro Inspector, who will in turn contact Metro's Utility Coordination Section. The Utility Coordination Section will review the problem with the COH's Street Light Division (or other municipality if applicable) and CNP for approval of any changes.

2.8 For <u>any</u> contractor-proposed changes to CNP's conduit system design, Contractor must obtain prior approval from CNP. Contractor shall first notify City/County or Metro Inspector of requested changes, who will in turn notify City/County Public Works, other municipality or Metro's Utility Coordination Section. City/County Public Works, other municipality or Metro Utility Coordination will review the requested changes with CNP for approval.

2.9 For proposed street lights on bridges or elevated roads, Contractor shall design and install foundations that meet the loading requirements of CNP Specification for Galvanized Street Light Standards 007-371-04. For information on pull-boxes and conduit, see Article 8.0.

3.0 MATERIAL FURNISHED BY CNP

CNP shall only furnish the pull-boxes (see Article 4.0) and the warning tape (see Article 5.0). Pull-boxes will not be furnished for installation on bridges or elevated roads.

3.1 The Customer's Contractor shall notify CNP Street Light Engineering when pull-boxes and warning tape are required, seven working days in advance of planned pick-up. Pull-boxes and tape can be obtained Tuesday through Friday, excluding holidays, from the South Houston Complex-Building D, located at 4500 South Shaver, Houston, Texas, 77034.

3.2 After Contractor's notification, CNP will provide Contractor with a work order number for reference when picking up materials at the South Houston Complex-Building D.

4.0 PULL-BOX

The following sub-articles state the general requirements for pull-boxes:

4.1 The pull-boxes shall be furnished by CNP and shall be installed by the Customer's Contractor as a part of the conduit system.

4.2 Pull-boxes shall be installed in accordance with sheet 9 & 10 of this specification. The conduit layout will specify the type of pull-box to be installed.

4.3 At the point of entrance to the pull-box, the conduits shall always have a minimum ground cover as noted on pull-box drawing. Conduit shall run up a maximum of 5 inches into the pull-box. The bends to be used with the pull-box shall have a minimum radius as shown on pull-box drawing.

5.0 WARNING TAPE

5.1 Warning tape shall be furnished by CNP and installed by the Customer's Contractor (see sheet 11).

5.2 Warning tape shall be installed approximately 12 inches above the street light conduit.

6.0 MATERIAL FURNISHED BY THE CUSTOMER

The Customer or Customer's Contractor shall furnish the conduits (see Article 7.0), the conduits and pull-boxes installed in bridges or elevated roadways (see Artical 8.0), the conduit plugs (see Article 9.0), and all other materials not furnished by CNP.

7.0 CONDUIT

The following sub-articles state the general requirements, unless specifically stated otherwise on the layout, for the number, size and installation of the conduit system from the pull-box to the street light or terminal pole.

7.1 Conduit shall be PVC Nema Tc2 Schedule 40 or Schedule 80, U.L. label, US trade size, and meet the standards of the National Electrical Code (NEC). Size to be determined by layout.

7.2 A No. 14 Aluminum or Copper wire, and a fiber pulling cord of at least 1200 pounds breaking strength shall be installed in the conduit.
Pulling cord shall be installed in such a manner as to provide adequate access and be free to pull without hindrance. Pulling cord shall not be glued or permanently attached to conduit in any manner. The pulling cord and wire shall beviewable from outside the end of conduit run.

7.3 The conduit runs shall be made "continuous" with all sections connected from beginning to end, including the conduit crossing the street. Stub-out will be required at all conduit end and street light locations (see drawing #004-237-16).

7.4 The conduit shall be placed 3 feet behind curb unless sidewalk is to be installed. Where sidewalks exist, conduit shall be placed up to 6 inches behind the sidewalk (or in grassy area between the curb and the start of sidewalk, where 12 inches or more of grassy area exists) (see sheet 12). Even though sidewalks exist, CNP will install street light approximately 3 feet back of curb. City/County/Metro Contractor shall design a block-out area for the street light installation in concrete area (see sheet 16).

7.5 The conduit shall have a minimum cover of 36 inches from final grade except as noted on pull-box and manhole drawing, or where city, county or state regulators require a greater depth, and shall consist of PVC conduit.

7.6 For the burial of street light conduits crossing under driveways or sidewalks, schedule 40 PVC or better is required. When crossing under streets, the conduit shall be PVC conduit schedule 80.

7.7 For terminal pole source locations specified on the layout, the bend of the conduits at the terminal pole shall be 90 degrees, 24 inch radius bend, schedule 40 PVC conduit. This bend shall be brought to the face of the pole and stubbed out approximately 12 inches above the final grade (see sheet 14).

7.8 For pad mounted transformer source locations specified on the layout, conduit shall be brought to within 1 foot of transformer pad, opposite the small notch "V" on the pad, stubbed out approximately 12 inches above the final grade.

7.9 For secondary pedestal source locations specified on the layout, conduit shall be brought to within 1 foot of pedestal and stubbed out approximately 12 inches above the final grade.

7.10 For manhole source location, the conduit shall enter the manhole a minimum of 12 inches from the inside ceiling or as specified on the layout. A ductbell terminator will be installed in the manhole wall for conduit termination. CNP shall be notified 48 hours prior to the actual coring of the manhole wall so that CNP can verify the location in each manhole to be penetrated. CNP will stand-by only during the actual coring. The contractor shall do the coring and installation of the ductbell terminator. The contractor shall seal around the ductbell terminator with packaged, dry, rapid hardening cementitious material conforming to ASTM C928-80 specifications, to ensure a water

tight seal.

8.0 CONDUIT INSTALLED IN BRIDGE OR ELEVATED ROADWAY

Customer or Customer's Contractor shall be responsible for designing, furnishing and installing the conduits and pull-boxes. The pull-boxes should be located to provide CNP personnel safe and reasonable access, without using ladders or other special equipment, for cable installation, inspection and maintenance. Where there are junction-boxes in addition to the pull-boxes, reasonable access shall also be provided.

8.1 The conduit shall be at least 2 inches, in diameter and meet all requirements of the latest National Electrical Code (NEC) and National Electrical Safety Code (NESC).

8.2 The conduits shall run to each street light location. The conduits shall be arranged to allow the source conductor to be pulled in and out of each street light location or Contractor shall provide junction-boxes on main conduit run at each street light location and run tap conduit to the street light location (see sheet 15 for examples of conduit runs).

8.3 A #14 Aluminium or Copper wire, and a fiber pulling cord of at least 1200 pound breaking strength shall be installed in the conduit.

A toning wire and pulling cord shall be installed in such a manner as to provide adequate access and be free to pull without hindrance. Pulling cord shall not be glued or permanently attached to conduit in any manner. The wire and pulling cord shall be attached and viewable outside the end of conduit run.

8.4 The pull-boxes used to pull the main circuit cable through the conduit system shall have a minimum opening of 15" x 15" x 12".

8.5 Junction boxes used as tap location shall meet all requirements of the latest NEC.

9.0 CONDUIT PLUGS

Plugs shall be installed on all conduit terminator points at the time the conduits are installed, to prevent blockage, until the cable is installed.

10.0 LIABILITY

10.1 Upon completion of the conduit installation, the Customer (or Customer's Contractor) shall forward to CNP Street Light Engineering notification in writing from a City or County Inspector that the installation meets CNP Specifications. In addition, Customer shall provide CNP with as-built drawings (showing conduits, pull-box, blockout, etc.).

10.2 The Customer shall be responsible for either: (1) correcting any violations of said Specifications and clearing any blockage or repairing any breaks within the street light conduits prior to street lights and circuit installation by CNP, or (2) reimbursing CNP for correcting violation.

10.3 Upon installation of street lights, with the exception of street lights on bridges or elevated roadways, CNP shall furnish, install, own, and at all times have complete control over said street light service conduit system and shall be responsible for the location and maintenance thereof. Maintenance of conduit systems on bridges or elevated roadways will be the Customer's responsibility.

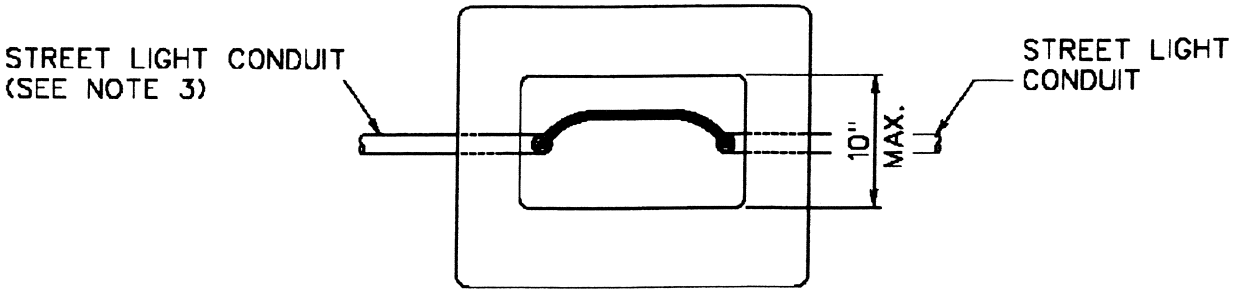

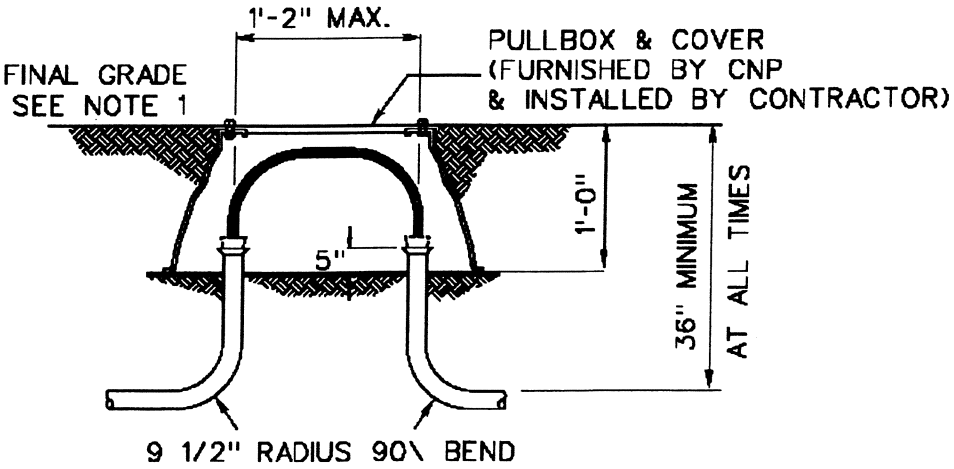

SMALL PULL BOX

NOTES:

1. GRADE AT TIME OF INSTALLATION SHALL BE CONSIDERD DEVELOPER'S FINAL GRADE.
2. THE SMALL CONCRETE PULL-BOX CAN BE INSTALLED IN DRIVEWAYS AND PARKING LOTS BUT NOT IN STREET.
3. THE NUMBER, SIZE AND DIRECTION OF CONDUITS TO BE SPECIFIED ON CNP CONDUIT LAYOUT.

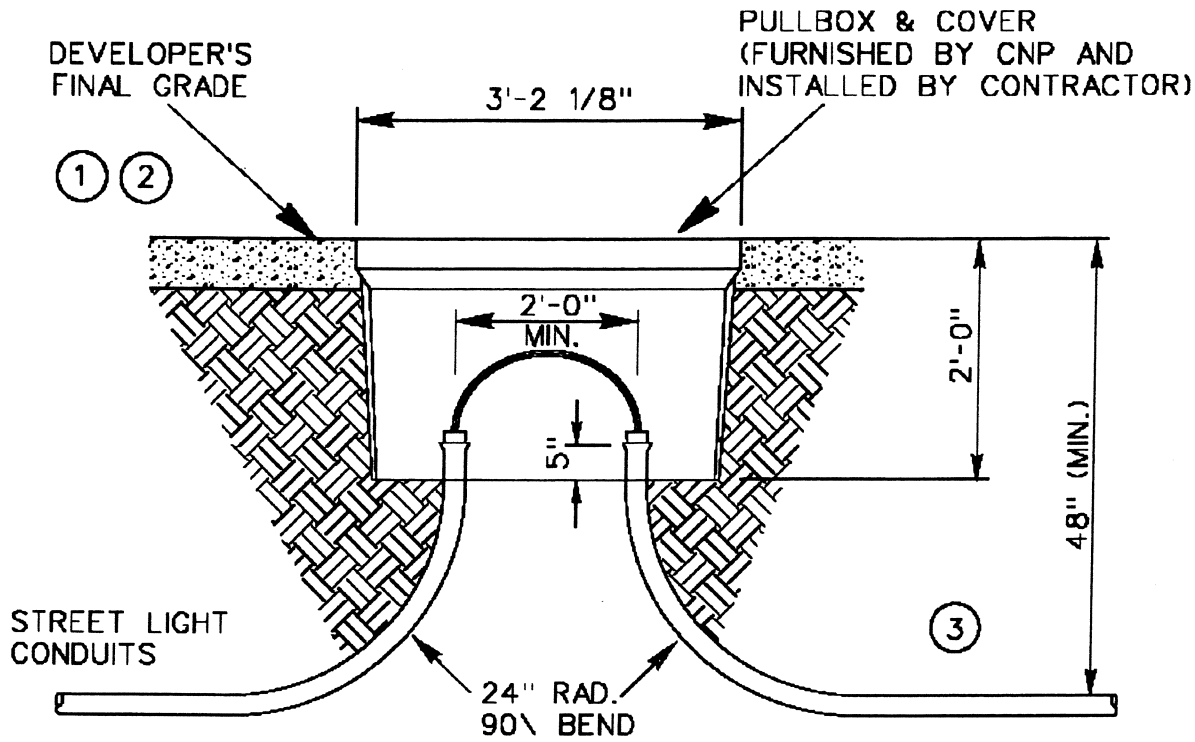

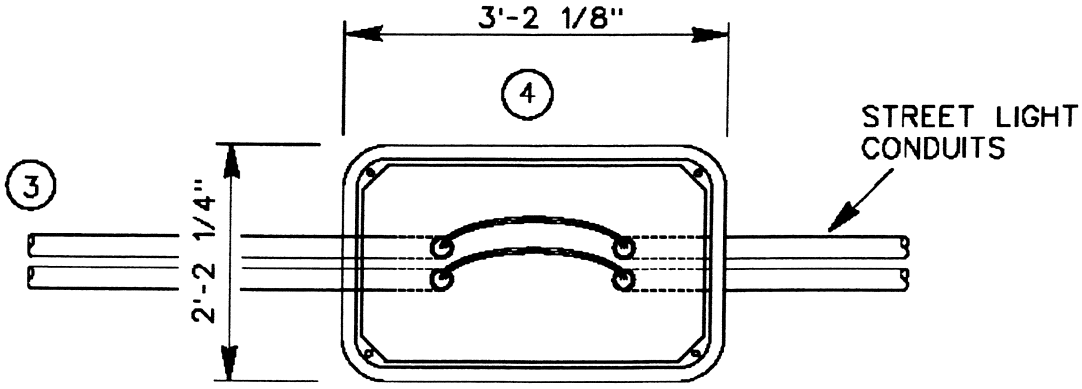

LARGE PULL BOX

1. GRADE AT TIME OF INSTALLATION SHALL BE CONSIDERED DEVELOPER'S FINAL GRADE.
2. WHEN INSTALLING PULL BOXES IN INCIDENTAL TRAFFIC LOADING AREA, DEVELOPER'S FINAL GRADE REFERS TO THE SURFACE OF THE PAVEMENT.
3. THE NUMBER, SIZE AND DIRECTION OF CONDUITS TO BE SPECIFIED ON CNP CONDUIT LAYOUT.
4. THIS PULL-BOX CAN BE INSTALLED IN DRIVEWAYS AND PARKING LOTS BUT NOT IN STREET.

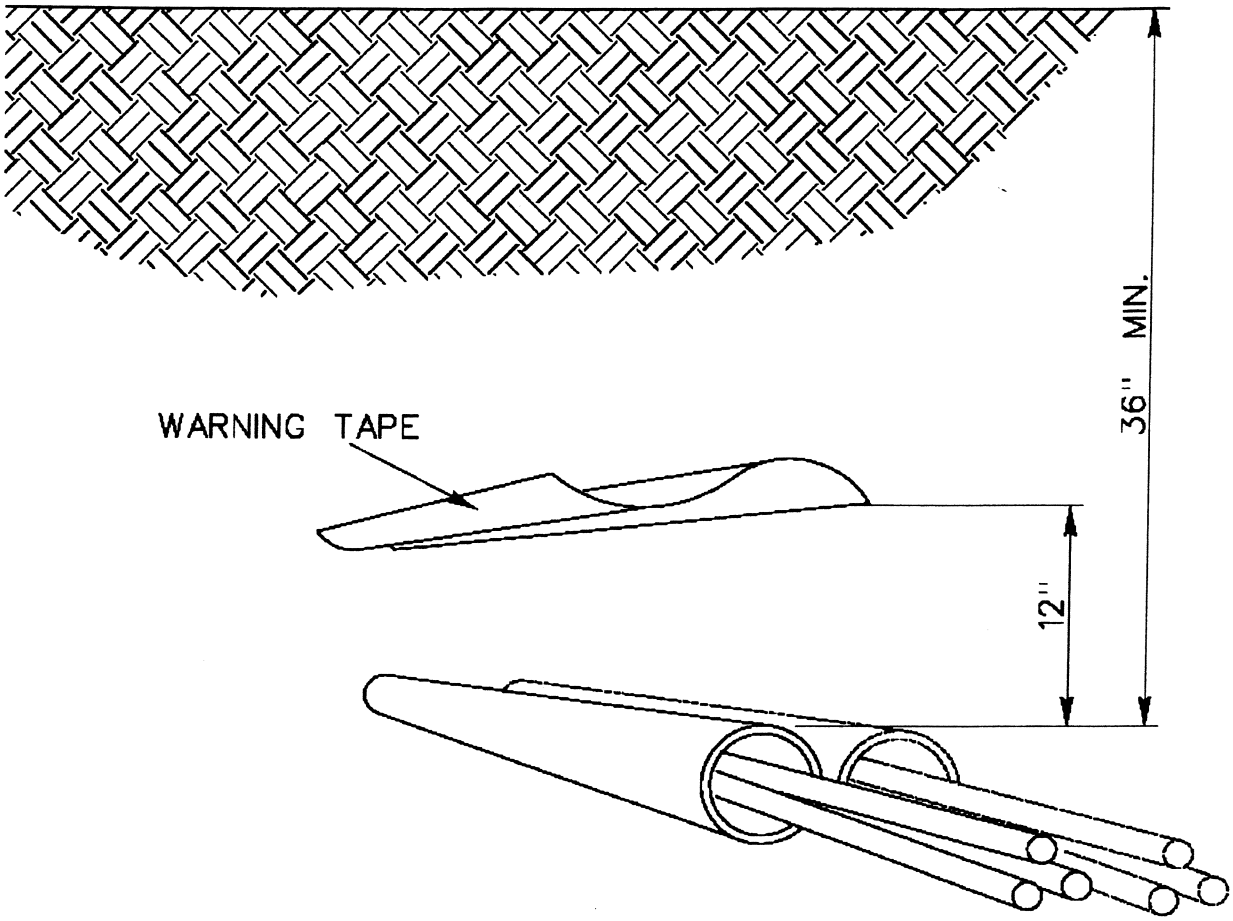

TYPICAL STREET LIGHT CONDUIT LAYOUT

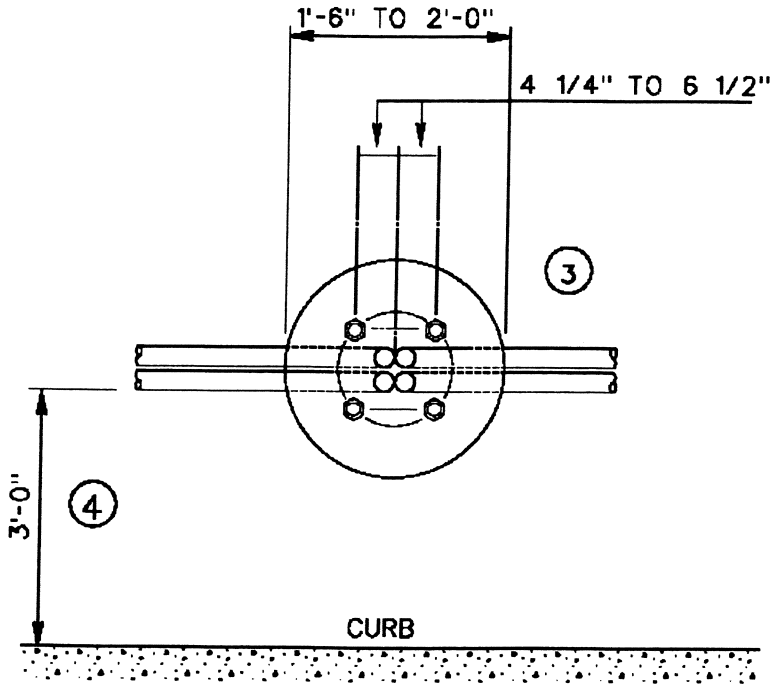

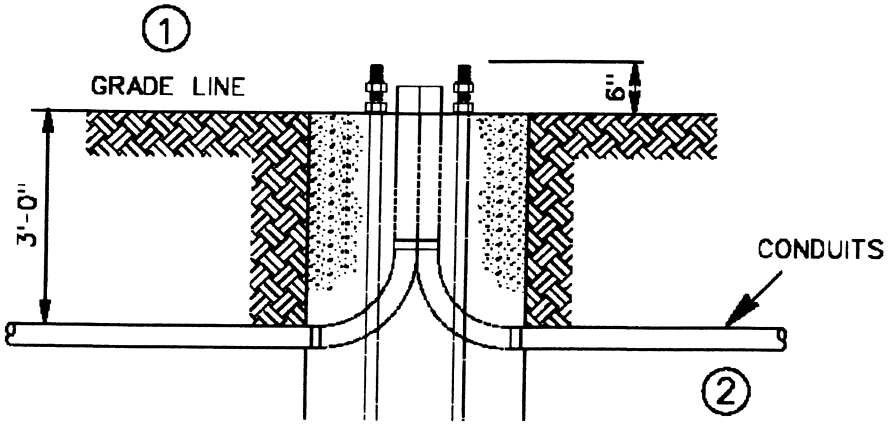

MULTIPLE CONDUIT RUN IN STREET LIGHT FOUNDATION

1. GRADE AT TIME OF INSTALLATION SHALL BE CONSIDERED DEVELOPER'S FINAL GRADE.
2. THE QUANTITY, SIZE AND DIRECTION OF CONDUITS TO BE SPECIFIED BY ENGINEERING DEPARTMENT.
3. SEE ACCOMPANING CNP STANDARDS FOUNDATION FOR ACTUAL SIZE AND ANCHOR BOLT POSITION.
4. CNP STANDARD LOCATION OF STREET LIGHT IS 3' BEHIND THE 6" CURB, UNLESS SPECIFIED DIFFERENTLY BY CITY / COUNTY / METRO.

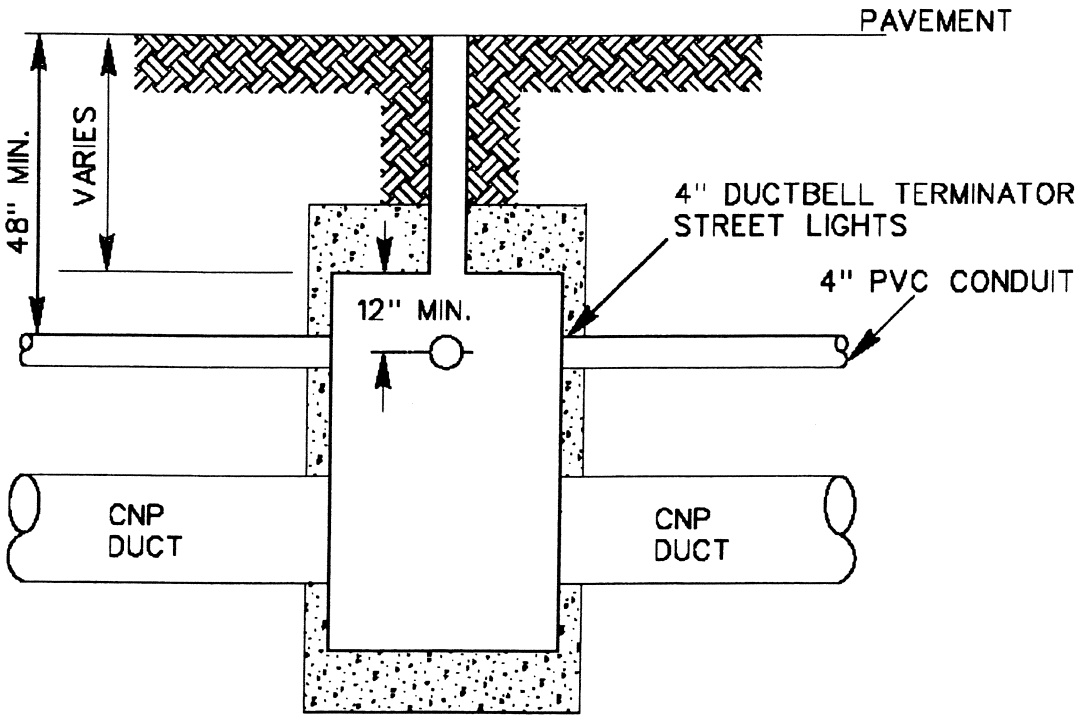

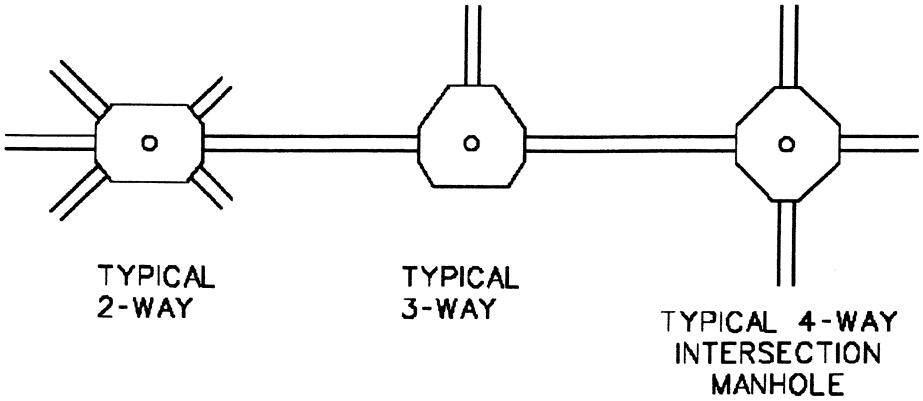

STREET LIGHT CONDUIT RUN FROM MANHOLE

1. CONDUITS SHALL TYPICALLY ENTER THE MANHOLE THROUGH THE SHORT WALLS. CNP MUST APPROVE ENTRY THROUGH OTHER WALLS.
2. THE NUMBER, SIZE AND DIRECTION OF CONDUITS TO BE SPECIFIED BY ENGINEERING DEPARTMENT.
3. CNP TO BE NOTIFIED 48 HOURS PRIOR TO THE ACTUAL CORING TO THE MANHOLE WALL.

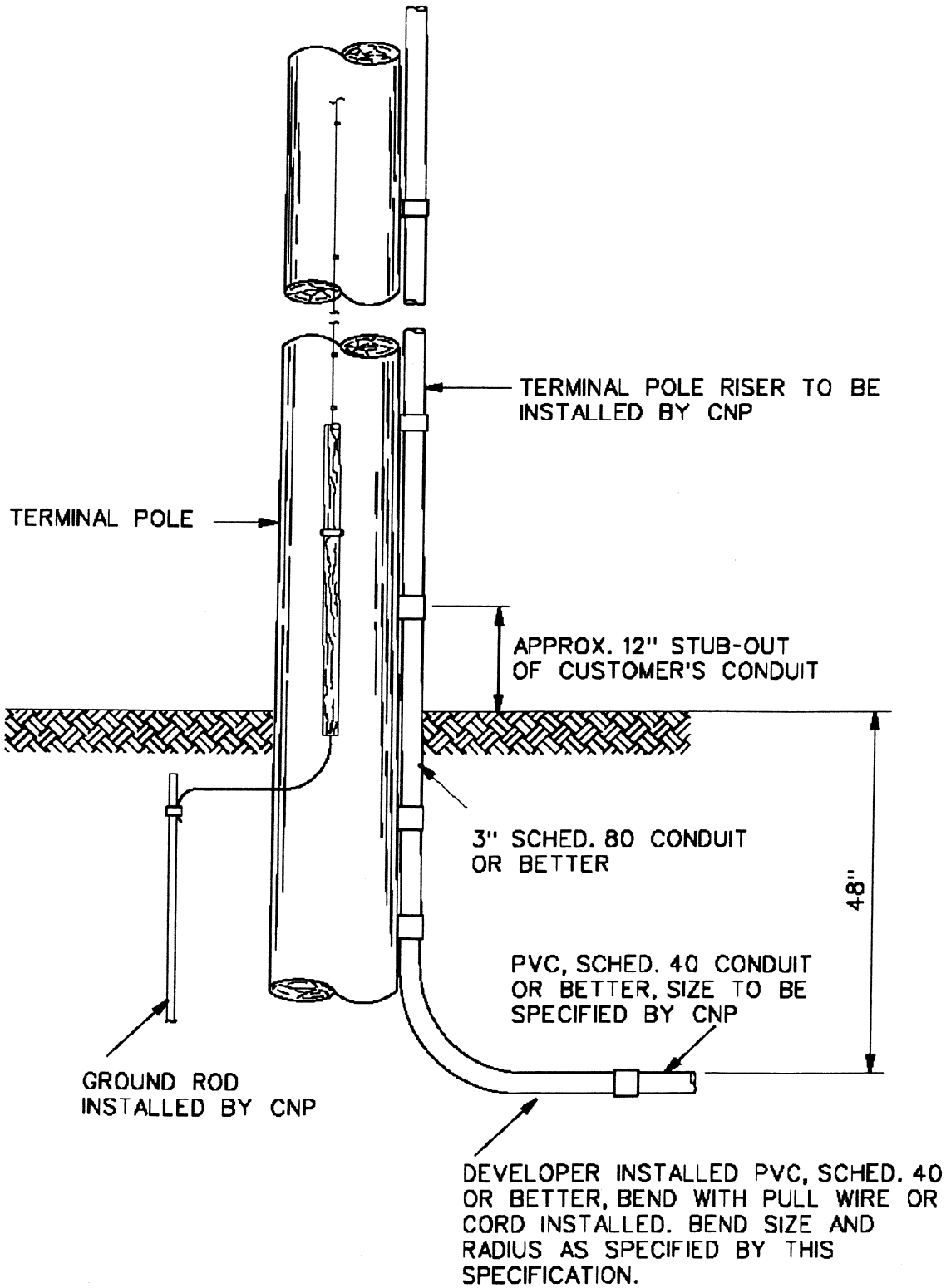

TYPICAL TERMINAL POLE LAYOUT

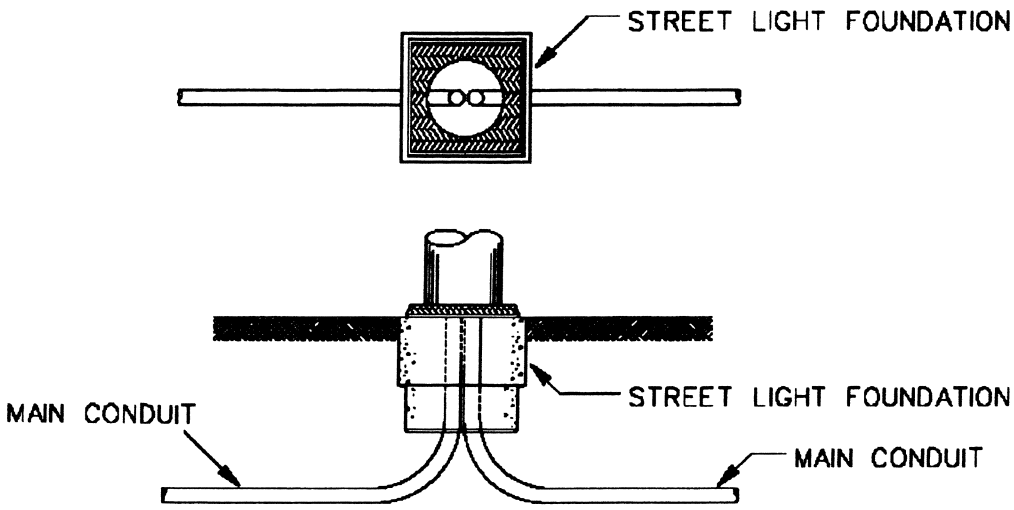

MAIN CONDUIT INSTALLED TO EACH STREET LIGHT
(SOURCE WIRE PULLED TO EACH LOCATION)

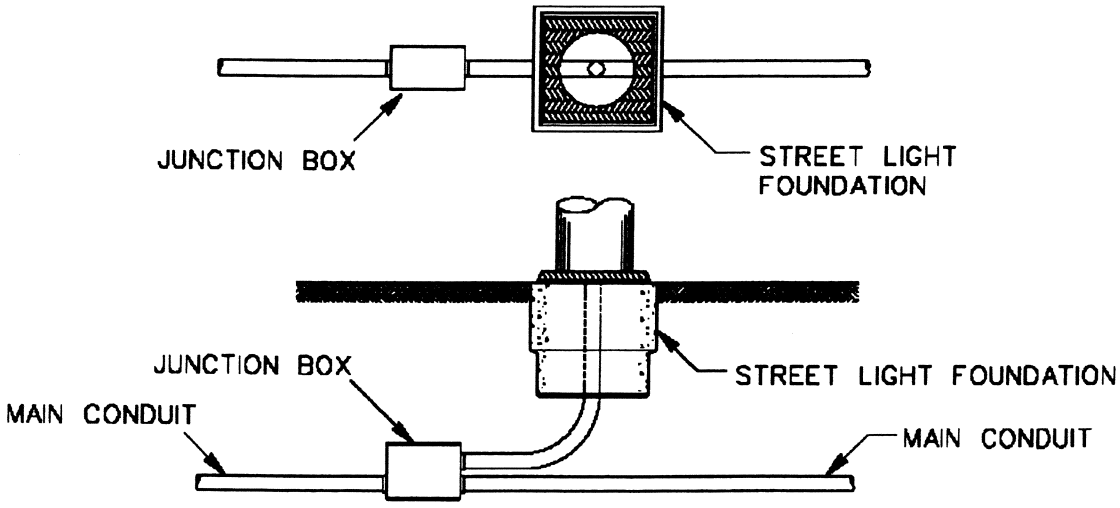

MAIN CONDUIT WITH TAPS FEEDING EACH LOCATION

NOTE:
ALL MATERIAL INSTALLED IN BRIDGE OR ELEVATED ROADWAY CONSTRUCTION SHALL BE FURNISHED BY CUSTOMER.

CONDUIT INSTALLED IN BRIDGE OR ELEVATED ROADWAY

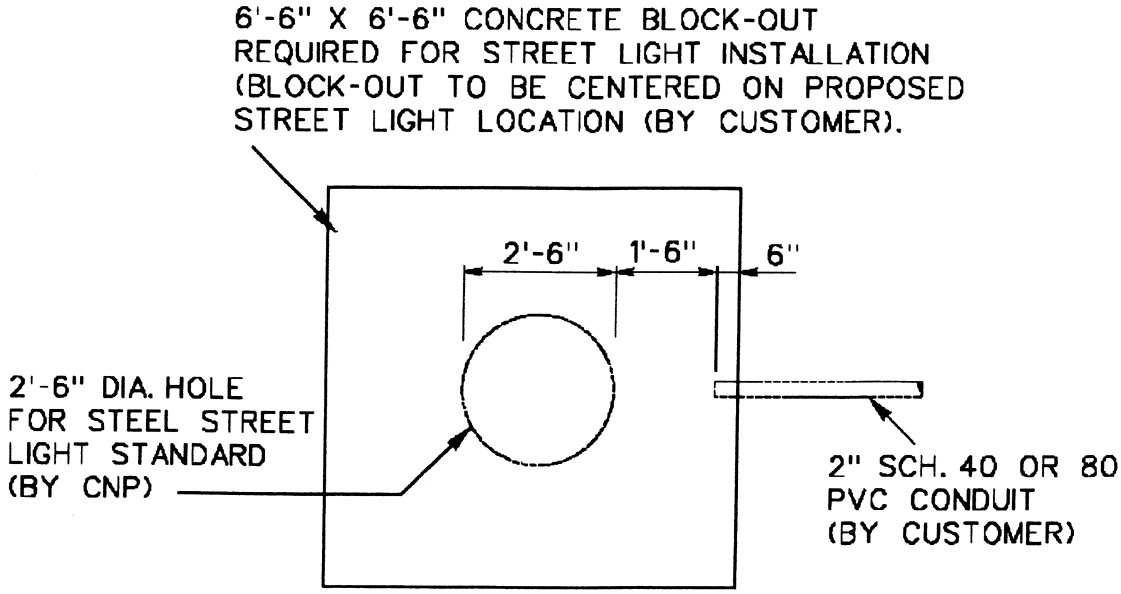

STREET LIGHT @ END OF CIRCUIT

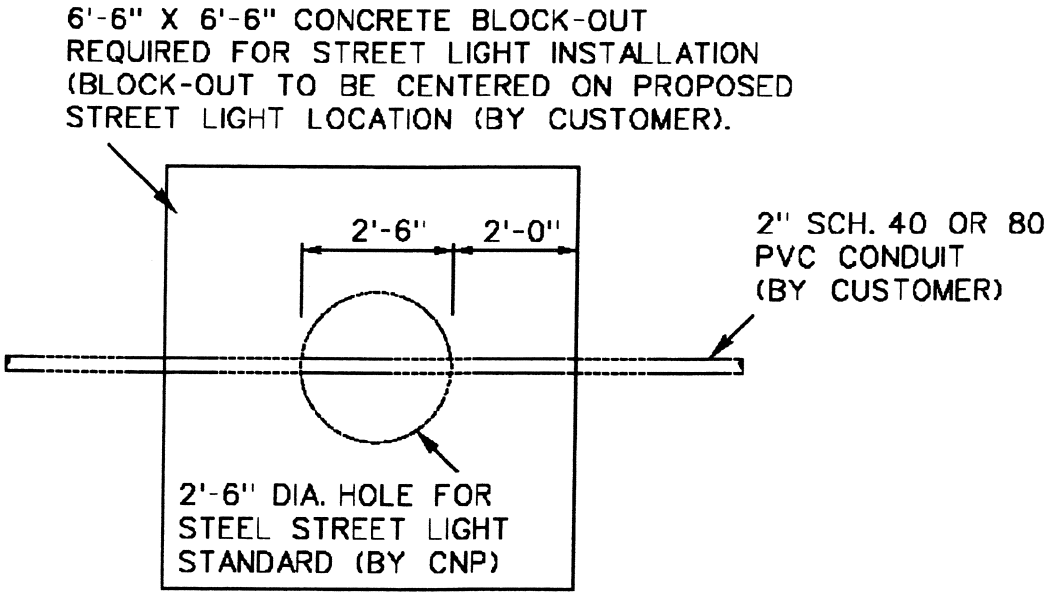

STREET LIGHT @ CONTINUOUS CIRCUIT

BLOCK-OUT DETAIL FOR STREET LIGHTS LOCATED IN CONCRETE AREAS

Section 01145

USE OF PREMISES

1.01 SECTION INCLUDES

A. General use of the site including properties inside and outside of rights-of-way, work affecting road, ramps, streets and driveways and notification to adjacent occupants.

1.02 RIGHTS-OF-WAY

A. Confine access, and operations and storage areas to rights-of-way provided by the City as stipulated in Document 00700 - General Conditions; trespassing on abutting lands or other lands in the area is not allowed.

B. Make arrangements, at no cost to the City, for temporary use of private properties. Contractor and Surety shall indemnify and hold harmless the City against claims or demands arising from such use of properties outside of rights-of-way. Submit a copy of agreements between private property owners and Contractor prior to use of the area. Agreements between private property owners and Contractor shall be notarized or bear the signatures of two witnesses.

C. Obtain written permission from City of Houston Parks and Recreation Department for storage of materials on esplanades and other areas within rights-of-way under that department's jurisdiction. Submit copies of written permission prior to use of the area.

D. Restrict total length of distributed materials along the route of construction to 1,000 linear feet unless otherwise approved in writing by City Engineer.

1.03 PROPERTIES OUTSIDE OF RIGHTS-OF-WAY

A. Do not alter the condition of properties adjacent to and along rights-of-way.

B. Do not use ways, means, methods, techniques, sequences, or procedures that result in damage to properties or improvements.

C. Restore damaged properties outside of rights-of-ways at no cost to the city

1.04 USE OF SITE

A. Obtain approvals from governing authorities prior to impeding or closing public roads and streets. Do not close more than two consecutive intersections at one time.

B. Notify Project Manager and Public Works and Engineering Traffic Management Branch at least five working days prior to closing a street or street crossing. Obtain permits for street closures in advance.

C. Maintain 10-foot-wide minimum access lanes for emergency vehicles including access to fire hydrants.

D. Avoid obstructing drainage ditches or inlets. When obstruction is unavoidable due to requirements of the Work, provide grading and temporary drainage structures to maintain unimpeded flow.

E. Locate and protect private lawn sprinkler systems that may exist within the site. Repair or replace damaged systems to condition existing at start of the Work, or better. Test irrigation system prior to construction.

F. Conform to daily clean-up requirements of Article 3 of Document 00700 - General Conditions.

G. Beware of overhead power lines existing in area and in close proximity of the Project. When 10 feet of clearance between energized overhead power line and construction-related activity cannot be maintained, request Center Point Energy (CPE) de-energize or move conflicting overhead power line. Contact CPE representatives at (713) 207-2222. Schedule, coordinate and pay costs associated with de-energizing or moving conflicting overhead power lines. When there is no separate pay item for this effort, include these costs in various items of bid that make such work necessary.

1.05 NOTIFICATION TO ADJACENT OCCUPANTS

A. Notify individual occupants in areas to be effected by the Work of proposed construction and time schedule. Notify not less than 72 hours or more than two weeks prior to work performed within 200 feet of homes or businesses. Follow form and content of sample door hanger provided by Project Manager.

B. Include in notification nature of the Work, and names and telephone numbers of two company representatives for resident contact available on 24-hour call.

C. Submit proposed notification to Project Manager for approval. Consider ethnicity of the neighborhood where English is not the dominant language. Provide notice in an understandable language.

1.06 PUBLIC, TEMPORARY, AND CONSTRUCTION ROADS AND RAMPS

A. Construct and maintain temporary detours, ramps, and roads to provide for normal public traffic flow when it is necessary to close public roads or streets.

B. Provide mats or other means to prevent overloading or damage to existing roadways from tracked equipment, large tandem axle trucks or equipment that will damage the existing roadway surfaces.

C. Construct and maintain access roads and parking areas as specified in Section 01504 - Temporary Facilities and Controls.

1.07 EXCAVATION IN STREETS AND DRIVEWAYS

A. Avoid hindering or inconveniencing public travel on streets or intersecting alleys for more than two blocks at any one time, except by permission of City Engineer.

B. Obtain Traffic Management Branch and City Engineer's approval when nature of the Work requires closure of an entire street. Permits required for street closure are Contractor's responsibility. Avoid unnecessary inconvenience to abutting property owners.

C. Remove surplus materials and debris and open each block for public use, as work in that block is complete.

D. Acceptance of any portion of the Work will not be based on return of street to public use.

E. Avoid obstructing driveways or entrances to private property.

F. Provide temporary crossings or complete excavation and backfill in one continuous operation to minimize duration of obstruction when excavation is required across drives or entrances.

G. Provide barricades and signs in accordance with Section VI of the State of Texas Manual on Uniform Traffic Control Devices.

1.08 TRAFFIC CONTROL

A. Comply with traffic regulation as specified in Section 01555 - Traffic Control and Regulation.

1.09 SURFACE RESTORATION

A. Restore the site including landscaping to the condition existing before construction, or better.

B. Repair paved areas per the requirements of Section 02951 - Pavement Repair and restoration.

C. Repair damaged turf areas, level with bank run sand conforming to Section 02317 - Excavation and Backfill for Utilities, or topsoil conforming to Section 02911 - Topsoil, and re-sod in accordance with Section 02922 - Sodding. Water and level newly sodded areas with adjoining turf using appropriate steel wheel rollers for sodding. Do not use spot sodding or sprigging.

1.10 LIMITS OF CONSTRUCTION

A. Confine operations to lands within construction work limits shown on Drawings. Unless otherwise noted on Drawings adhere to the following:

1. Where utility alignment is within esplanade, and construction limits are shown on Drawings to extend to edge of esplanade, keep equipment, materials, stockpiles a minimum of five feet from back of curb.

2. Where construction limits shown on Drawings extend to property line, keep sidewalks free of equipment, materials, and stockpiles.

1.11 EQUIPMENT AND MATERIAL SALVAGE

A. Upon completion of the Work, carefully remove salvageable equipment and material. Deliver them to City of Houston as directed by Project Manager. Dispose of equipment offsite at no additional cost to the City when Project Manager deems equipment unfit for further use.

PART 2 P R O D U C T S - Not Used

PART 3 E X E C U T I O N - Not Used

END OF SECTION

Section 01255

CHANGE ORDER PROCEDURES

PART 1 G E N E R A L

1.01 SECTION INCLUDES

A. Procedures for processing Change Orders, including:

1. Assignment of a responsible individual for approval and communication of changes in the Work;

2. Documentation of change in Contract Price and Contract Time;

3. Change procedures, using proposals and Modifications;

4. Execution of Change Orders;

5. Correlation of Contractor submittals.

1.02 REFERENCES

A. Blue Book is defined as the Rental Rate Blue Book for Construction Equipment (a.k.a. Data Quest Blue Book).

B. Rental Rate is defined as the full-unadjusted base rental rate for the appropriate item of construction equipment.

1.03 RESPONSIBLE INDIVIDUAL

A. Provide a letter indicating the name and address of the individual authorized to execute Modifications, and who will be responsible for informing others in Contractor's employ and Subcontractors of changes to the Work. Provide this information at the pre-construction meeting.

1.04 DOCUMENTATION OF CHANGE IN CONTRACT PRICE AND CONTRACT TIME

A. Maintain detailed records of changes in the Work. Provide full information required for identification and evaluation of proposed changes, and substantiate costs of changes in the Work.

B. Document each proposal for change in Contract Price or Contract Time with sufficient data to allow evaluation of proposal.

C. Include the following minimum information on proposals:

1. Quantities of items in original Document 00410 – Bid Form with additions, reductions, deletions, and substitutions.

2. Quantities and cost of items in original Schedule of Values with additions, reductions, deletions and substitutions.

3. Provide Unit Prices for new items, with supporting information, for inclusion in Schedule of Unit Price Work.

4. Justification for changes in Contract Time.

5. Additional data upon request.

D. For changes in the Work performed on a time-and-material basis, provide the following additional information:

1. Quantities and description of Products.

2. Taxes, insurance and Bonds.

3. Overhead and profit as noted in Document 00700 - General Conditions.

4. Dates, times and by who work was performed.

5. Time records and certified copies of applicable payrolls.

6. Invoices and receipts for Products, rental equipment, and subcontracts, similarly documented.

E. For changes in the Work performed on a time-and-materials basis, rental equipment is paid as follows:

1. Actual invoice cost for duration of time required to complete extra work without markup for overhead and profit. When extra work comprises only a portion of a rental invoice where equipment would otherwise be on site, compute hourly equipment rate by dividing the actual monthly invoice by 176. One day equals eight hours and one week equals 40 hours.

2. Do not exceed estimated operating costs given in Blue Book for items of equipment. Overhead and profit will be allowed on the operating cost.

F. For changes in the Work performed on a time-and-materials basis using Contractor-owned equipment, use Blue Book rates as follows:

1. Contractor-owned equipment will be paid at the Blue Book Rental Rate for the duration of time required to complete extra work without markup for overhead and profit. Utilize lowest cost combination of hourly, daily, weekly or monthly rates. Use 150 percent of Rental Rate for double shifts, one extra shift per day, and 200 percent of Rental Rate for more than two shifts per day. Standby rates shall be 50 percent of the appropriate Rental Rate shown in Blue Book. No other rate adjustments apply.

2. Do not exceed estimated operating costs given in Blue Book. Overhead and profit will be allowed on operating costs. Operating costs will not be allowed for equipment on standby.

1.05 CHANGE PROCEDURES

A. Changes to Contract Price or Contract Time can only be made by issuance of Document 00941 - Change Order. Issuance of Document 00940 - Work Change Directive will be formalized into a Change Order. Changes will be in accordance with requirements of Document 00700 - General Conditions.

B. City Engineer will advise of Minor Changes in the Work as authorized by the Document 00700 - General Conditions by issuing Document 00942 – Minor Change.

C. Request clarification of Drawings, Specifications, Contract documents or other information by using Document 00931- Request for Information. Response by Project Manager to Requests for Information does not authorize Contractor to perform tasks outside scope of the Work. Changes must be authorized as described in this Section.

1.06 PROPOSALS AND CONTRACT MODIFICATIONS

A. Project Manager may issue Document 00932- Request for Proposal, which includes a detailed description of the proposed change with supplementary or revised Drawings and Specifications. Project Manager may also request a proposal in response to a Request for Information. Prepare and submit the proposal within seven days or as specified in request.

B. Submit requests for Contract changes to City Engineer describing proposed change and its full effect on the Work, with a statement describing reason for change and effect on Contract Price and Contract Time including full documentation.

C. Design Consultant may review Change Orders.

1.07 WORK CHANGE DIRECTIVE

A. City Engineer may issue a signed Work Change Directive instructing Contractor to proceed with a change in the Work. Work Change Directive will subsequently be incorporated into a Change Order.

B. Work Change Directives will describe changes in the Work and designate the method of determining change in Contract Price or Contract Time.

C. Proceed promptly to execute changes in the Work in accordance with the Work Change Directive.

1.08 STIPULATED PRICE CHANGE ORDER

A. A Stipulated Price Change Order will be based on an accepted proposal.

1.09 UNIT PRICE CHANGE ORDER

A. Where Unit Prices for affected items of the Work are included in Document 00410 – Bid Form, the Change Order will be based on Unit Prices, subject to Articles 7 and 9 of Document 00700 - General Conditions.

B. Where Unit Prices of the Work are not pre-determined in Document 00410-Bid Form, the Work Change Directive or accepted proposal will specify the Unit Prices to be used.

1.10 TIME-AND-MATERIAL CHANGE ORDER

A. Provide itemized account and supporting data after completion of change, within time limits indicated for claims in Document 00700 - General Conditions.

B. City Engineer will determine the change allowable in Contract Price and Contract Time as provided in Document 00700 - General Conditions.

C. Maintain detailed records for work done on time-and-material basis as specified in Paragraph 1.04 above.

D. Provide full information required for evaluation of changes and substantiate costs for changes in the Work.

1.11 EXECUTION OF CHANGE DOCUMENTATION

A. City Engineer will issue Change Orders, Work Change Directives, or Minor Change in the Work for signatures of Parties as described in Document 00700 - General Conditions.

1.12 CORRELATION OF CONTRACTOR SUBMITTALS

A. For Stipulated Price Contracts, promptly revise Schedule of Values and Application for Payment forms to record authorized Change Orders as separate line item.

B. For Unit Price Contracts, the next monthly estimate of the Work after acceptance of a Change Order will be revised to include new items not previously included with appropriate Unit Prices.

C. Promptly revise progress schedules to reflect change in Contract Time, and to adjust time for other items of work affected by the change, and resubmit for review.

D. Promptly enter changes to on-site and record copies of Drawings, Specifications or Contract documents as required in Section 01785 - Project Record Documents.

PART 2 P R O D U C T S - Not Used

PART 3 E X E C U T I O N - Not Used

END OF SECTION

Section 01270

MEASUREMENT AND PAYMENT

PART 1 G E N E R A L

1.01 SECTION INCLUDES

A. Procedures for measurement and payment plus conditions for nonconformance assessment and nonpayment for rejected Products.

1.02 AUTHORITY

A. Measurement methods delineated in Specification sections are intended to complement criteria of this Section. In event of conflict, requirements of the Specification section shall govern.

B. Project Manager will take all measurements and compute quantities accordingly.

C. Assist by providing necessary equipment, workers, and survey personnel.

D. Measurement and Payment paragraphs are included only in those Specification sections of Division 01 where direct payment will be made. Include costs in the total bid price for those Specification sections in Division 01 that do not contain Measurement and Payment paragraphs,

1.03 UNIT QUANTITIES SPECIFIED

A. Quantity and measurement estimates stated in the Agreement are for contract purposes only. Quantities and measurements supplied or placed in the Work and verified by Project Manager will determine payment as stated in Article 9 of Document 00700 - General Conditions.

B. When actual work requires greater or lesser quantities than those quantities indicated in Document 00410 – Bid Form, provide required quantities at Unit Prices contracted, except as otherwise stated in Article 9 of Document 00700 - General Conditions.

1.04 MEASUREMENT OF QUANTITIES

A. Measurement by Weight: Reinforcing steel, rolled or formed steel or other metal shapes are measured by CRSI or AISC Manual of Steel Construction weights. Welded assemblies are measured by CRSI or AISC Manual of Steel Construction or scale weights.

B. Measurement by Volume:

1. Stockpiles: Measured by cubic dimension using mean length, width, and height or thickness.

2. Excavation and Embankment Materials: Measured by cubic dimension using average end area method.

C. Measurement by Area: Measured by square dimension using mean length and width or radius.

D. Linear Measurement: Measured by linear dimension, at item centerline or mean chord.

E. Stipulated Price Measurement: By unit designated in the Agreement.

F. Other: Items measured by weight, volume, area, or linear means or combination, as appropriate, as completed item or unit of the Work.

G. Measurement by Each: Measured by each instance or item provided.

H. Measurement by Lump Sum: Measure includes all associated work.

1.05 PAYMENT

A. Payment includes full compensation for all required supervision, labor, Products, tools, equipment, plant, transportation, services, and incidentals; and erection, application or Installation of an item of the Work; and Contractor's overhead and profit.

B. Total compensation for required Unit Price work shall be included in Unit Price bid in Document 00410 – Bid Form. Claims for payment as Unit Price work, but not specifically covered in the list of Unit Prices contained in Document 00410 – Bid Form, will not be accepted.

C. Interim payments for stored materials will be made only for materials to be incorporated under items covered in Unit Prices, unless disallowed in Document 00800 - Supplementary Conditions.

D. Progress payments will be based on Project Manager's observations and evaluations of quantities incorporated in the Work multiplied by Unit Price.

E. Final payment for work governed by Unit Prices will be made on the basis of actual measurements and quantities determined by Project Manager multiplied by the Unit Price for work which is incorporated in or made necessary by the Work.

1.06 NONCONFORMANCE ASSESSMENT

A. Remove and replace work, or portions of the Work, not conforming to the Contract documents.

B. When not practical to remove and replace work, City Engineer will direct one of the following remedies:

1. Nonconforming work will remain as is, but Unit Price will be adjusted lower at discretion of City Engineer.

2. Nonconforming work will be modified as authorized by City Engineer, and the Unit Price will be adjusted lower at the discretion of City Engineer, when modified work is deemed less suitable than specified.

C. Specification sections may modify the above remedies or may identify a specific formula or percentage price reduction.

D. Authority of City Engineer to assess nonconforming work and identify payment adjustment is final.

1.07 NONPAYMENT FOR REJECTED PRODUCTS

A. Payment will not be made for any of the following:

1. Products wasted or disposed of in an unacceptable manner.

2. Products determined as nonconforming before or after placement.

3. Products not completely unloaded from transporting vehicles.

4. Products placed beyond lines and levels of required work.

5. Products remaining on hand after completion of the Work, unless specified otherwise.

6. Loading, hauling, and disposing of rejected Products.

PART 2 P R O D U C T S - Not Used

PART 3 E X E C U T I O N - Not Used

END OF SECTION

Section 01292

SCHEDULE OF VALUES

PART 1 G E N E R A L

1.01 SECTION INCLUDES

A. Preparation and submittal of Schedule of Values for Stipulated Price Contracts or for Major Unit Price Work on Unit Price Contracts.

1.02 PREPARATION

A. For Stipulated Price Contracts, subdivide the Schedule of Values into logical portions of the Work, such as major work items or work in contiguous construction areas. Use Section 01325 - Construction Schedule as a guide to subdivision of work items. Directly correlate Items in the Schedule of Values with tasks in the Construction Schedule. Organize each portion using the Project Manual Table of Contents as an outline for listing value of the Work by Sections. A pro rata share of mobilization, Bonds, and insurance may be listed as separate items for each portion of the Work.

B. For Unit Price Contracts, items should include a proportional share of Contractor's overhead and profit so that total of all items will equal Contract Price.

C. For lump sum equipment items, where submittal of operation and maintenance data and testing are required, include separate items for equipment operation and maintenance data where:

1. submittal of maintenance data is valued at five percent of the lump sum amount for each equipment item and

2. submittal for testing and adjusting is valued at five percent of the lump sum amount for each equipment item.

Round off figures for each item listed to the nearest $100. Set the value of one item, when necessary, to make total of all values equal the Contract Price for Stipulated Price Contracts or the lump sum amount for Unit Price Work.

1.03 SUBMITTAL

A. Submit the Schedule of Values, in accordance with requirements of Section 01330 - Submittal Procedures, at least 10 days prior to processing of the first Certificate for Payment.

B Submit the Schedule of Values in an approved electronic spreadsheet file and an 81/2-inch by 11-inch print on white bond paper.

C. Revise Schedule of Values for items affected by Contract Modifications. After City Engineer has reviewed changes, resubmit at least 10 days prior to the next scheduled Certificate for Payment date.

PART 2 P R O D U C T S - Not Used

PART 3 E X E C U T I O N - Not Used

END OF SECTION

Section 01312

COORDINATION AND MEETINGS

PART 1 G E N E R A L

1.01 SECTION INCLUDES

A. General coordination including pre-construction meeting, site mobilization conference, and progress meetings.

1.02 COORDINATION OF DOCUMENTS

A. Coordination is required throughout documents. Refer to Contract documents and coordinate as necessary.

1.03 CONTRACTOR COORDINATION

A. Coordinate scheduling, submittals, and work of various Specification sections to assure efficient and orderly sequence of Installation of interdependent construction elements.

B. Coordinate completion and clean up of the Work prior to the Date of Substantial Completion and for portions of the Work designated for City's partial occupancy.

C. Coordinate access to the site for correction of nonconforming work to minimize disruption of the City's activities where the City is in partial occupancy.

1.04 PRE-CONSTRUCTION MEETING

A. Project Manager will schedule pre-construction meeting.

B. Attendance Required: City representatives, Design Consultant, special consultants as required by Project Manager, Contractor, and major Subcontractors and Suppliers.

C. Agenda:

1. Distribution of Contract documents.

2. Designation of personnel representing the Parties and Design Consultant.

3. Review of insurance.

4. Discussion of formats for Schedule of Values and Construction Schedule.

5. Procedures and processing of Shop Drawings, substitutions, pay estimates or Applications for Payment, Requests for Information, Requests for Proposal, Modifications, and the Contract closeout, other submittals.

6. Scheduling of the Work and coordination with other contractors.

7. Review of Subcontractors and Suppliers.

8. Appropriate agenda items listed for the site mobilization conference, Paragraph 1.05.C, when pre-construction meeting and site mobilization conference are combined.

9. Procedures for testing.

10. Procedures for maintaining record documents.

1.05 SITE MOBILIZATION CONFERENCE

A. When required by Contract documents, Project Manager will schedule a conference at the Project site prior to Contractor mobilization.

B. Attendance Required: City representatives, Design Consultant, special consultants, Superintendent, and major Subcontractors.

C. Agenda:

1. Use of premises by the City and Contractor.

2. Safety and first aid procedures.

3. Construction controls provided by the City.

4. Temporary utilities.

5. Survey and layout.

6. Security and housekeeping procedures.

7. Field office requirements.

1.06 PROGRESS MEETINGS

A. Hold meetings at Project field office or other location designated by Project Manager. Hold meetings at monthly intervals, or more frequently when directed by Project Manager.

B. Attendance Required: Superintendent, major Subcontractors and Suppliers, City representatives, Design Consultant and its subconsultants as appropriate for agenda topics for each meeting.

C. Project Manager will make arrangements for meetings, and for recording minutes.

D. Project Manager will prepare the agenda and preside at meetings.

E. Provide required information and be prepared to discuss each agenda item.

F. Agenda:

1. Review minutes of previous meetings.

2. Review of construction schedule, pay estimates, cash flow curve, payroll and compliance submittals.

3. Field observations, problems, and necessary decisions.

4. Identification of problems that impede planned progress.

5. Review of submittal schedule and status of submittals.

6. Review of RFI and RFP status.

7. Modification status.

8. Review of off-site fabrication and delivery schedules.

9. Maintenance of Construction Schedule.

10. Corrective measures to regain Construction Schedule.

11. Planned progress during the succeeding work period.

12. Coordination of projected progress.

13. Maintenance of quality and work standards.

14. Effect of proposed Modifications on Construction Schedule and coordination.

15. Review Project Record Contract Drawings.

16. Other item relating to the Work.

PART 2 P R O D U C T S - Not Used

PART 3 E X E C U T I O N - Not Used

END OF SECTION

Section 01321

CONSTRUCTION PHOTOGRAPHS

PART 1 G E N E R A L

1.01 SECTION INCLUDES

A. Photographic requirements for construction photographs and submittals.

1.02 DEFINITIONS

A. Pre-construction Photographs: Photographs taken, in sufficient numbers and detail, prior to Date of Commencement of the Work, to show original construction site conditions.

B. Progress Photographs: Photographs, taken throughout the duration of construction at regular intervals and from fixed vantage points, pre-approved by the City, that document progress of the Work.

C. Finished Photographs: Photographs, taken by a professional photographer near Date of Substantial Completion and before City Council's acceptance of the Work, that are suitable for framing and for use in brochures or on the Internet

1.03 SUBMITTALS

A. Refer to Section 01330, Submittal Procedures, for submittal requirements.

B. Format and Media. Film or digital photography may be used. Submit color photographs, unless otherwise specified.

1. Prints. Submit each Progress or Pre-construction Photograph print in a three-hole plastic pocket or sleeve, bound in a three-ring notebook. Produce prints on photographic-quality paper approved by Project Manager. Minimum size for Pre-construction Photograph prints shall be 3-inches by 5-inches. Progress Photograph prints shall be 8-inches by 10-inches.

2. Film. Use 35mm or larger color film. Submit negatives used to make submitted photographs, in 3-hole 8-1/2 inch by 11-inch plastic sheets with sleeves for negatives.

3. Digital Photography. Use 2.1 megapixel density or greater for photographs. Scanned photographs must equal or exceed 400 dots

per inch when scanned from 8-inch by 10-inch prints. Submit digital photographic files on computer disks. Format disks for MS-DOS (Microsoft Disk Operating System) filing system and in JPEG (Joint Photographic Experts Group) format.

C. Submittal Quantities and Frequencies.

1. Pre-construction Photographs:
   a. For Stipulated Price Contracts, submit two sets of Pre-construction Photographs, if required, prior to first Application for Payment.
   b. For Unit Price Contracts, submit two sets of Pre-construction Photographs prior to start of construction operations.

2. Progress Photographs:
   a. For Stipulated Price Contracts, submit three sets of Progress Photographs with each Application for Payment at the times established for submittal of Applications for Payment. Monthly Applications for Payment shall be deemed incomplete if not accompanied by the required Progress Photographs. Contractor's failure or election to not submit a monthly Application for Payment shall not affect the requirement for monthly Progress Photographs.
   b. Progress Photographs are not required for Unit Price Contracts unless otherwise specified.

3. Finished Photographs: For Stipulated Price Contracts submit two sets of Finished Photographs, if required, after Date of Substantial Completion and prior to final payment. Each set shall contain one 11-inch by 14-inch matte finish color photographic print from each of the two vantage points pre-approved by the City. Vantage points for Finished Photographs will be approved separately from vantage points approved for Progress Photographs. Finished Photographs are not required for Unit Price Contracts unless otherwise specified.

D. Labeling. Place a label on the back of each photographic print, applied so as to not to show through on the front. Labels shall contain the following information:

1. Name of Project, address of Project and GFS Number.

2. Name and address of Contractor.

3. Date photograph was taken.

4. Location photo was taken from and short description of photo subject.

5. Name and address of professional photographer who took the photograph, if applicable.

E. Hand-deliver or transmit prints in standard photographic mailers marked "Photographs - Do Not Bend".

F. Photographic prints, negatives, photographic files and disks become the property of the City. Do not be publish photographs without written consent by the City.

1.04 QUALITY ASSURANCE

A. Contractor shall be responsible for the quality of and timely execution and submittal of photographs.

B. For Finished Photographs, Contractor shall use a professional photographer, with five years minimum professional experience in the Houston area. Contractor shall submit name, address and credentials of professional photographer for Project Manager's review and approval.

PART 2 PRODUCTS - Not Used

PART 3 EXECUTION

3.01 PRE-CONSTRUCTION PHOTOGRAPHS

A. Prior to commencement of construction operations, photograph the site to include initial construction corridor, detour routes, and staging or storage areas.

1. For Stipulated Price Contracts, unless specified as a requirement in other Sections, these photographs are optional for Contractor, but are highly recommended for areas bounded by other property owners.

2. Pre-construction photographs are required for Unit Price Contracts. For line projects with scheduled construction segments, take Pre-construction Photographs prior to commencement of work on each segment.

B. Prepare Pre-construction Photographs as follows:

1. Show the following information on a non-reflective chalkboard placed within the picture frame:
   a. Job number.
   b. Project Number.
   c. Date and time photographs were taken (Automatic date/time in negative is acceptable).
   d. Baseline station, direction of view (i.e. N, S, NW, etc.) and house number or street address and street name.

2. Pre-construction Photographs shall indicate condition of the following:
   a. Esplanades and boulevards.
   b. Yards (near side and far side of street).
   c. House walks and sidewalks.
   d. Curbs.
   e. Areas between walks and curbs.
   f. Particular features (e.g. yard lights, shrubs, fences, trees).

3. Show date photographs were taken on negatives.

C. Show the location of vantage points and direction of shots on a key plan of the site.

3.02 PROGRESS PHOTOGRAPHS

A. Progress Photographs document monthly advancement of the Work. Select vantage points for each shot so as to best show status of construction and progress since last photograph submittal. Select camera stations that will require little or no movement or adjustment over the duration of construction.

B. Take monthly Progress Photographs at regular intervals to coincide with cutoff dates associated with each Application for Payment.

3.03 FINISHED PHOTOGRAPHS

A. Finished Photographs shall be “staged” and taken by a professional photographer to depict the most flattering images of a finished facility. Two vantage points, from which Finished Photographs will be taken, shall be agreed to in advance by the City. Photographer shall consider lighting, time of day, height of eye, landscaping and placement of vehicles, people and other props in each picture. Filters and post-photography processing may be utilized to achieve a finished product acceptable to the City.

3.04 LOCATION

A. Vantage points, times and conditions for camera stations and photography for Progress and Finished Photographs shall be mutually agreed upon by the City, Contractor and Photographer. Progress Photograph vantage points may be changed by mutual agreement as the Work progresses, at no additional cost to the City.

END OF SECTION

Section 01325

CONSTRUCTION SCHEDULE

PART 1 G E N E R A L

1.01 GENERAL

A. Provide Construction Schedules for the Work included in this Contract in accordance with requirements in this Section. Create Construction Schedule using Critical Path Method (CPM) computer software capable of mathematical analysis of Precedence Diagramming Method (PDM) plan. Provide printed activity listings and bar charts in formats described in this Section.

B. Combine activity listings and bar charts with narrative report to form Construction Schedule submittal for Project Manager.

1.02 SCHEDULING STAFF

A. Employ or retain services of individual experienced in CPM scheduling for duration of the Contract. Individual shall cooperate with Project Manager and update schedule monthly as required to indicate current status of the Work.

1.03 SUBMITTALS

A. Conform to requirements of Section 01330 - Submittal Procedures.

B. During preconstruction meeting, as described in Section 01312 - Coordination and Meetings, provide sample bar charts and activity listings produced from scheduling software proposed. Scheduling software is subject to review by Project Manager and must meet requirements provided in this Section. Project Manager will provide review of samples within seven days of submittal.

C. Within 21 days of receipt of approval of Contractor's format, or 30 days of Notice to Proceed, whichever is later, submit proposed Construction Schedule for review. Base Construction Schedule submittal on the following:

1. Level of detail and number of activities required in schedule are dependent on project type.
   a. For wastewater projects, categorize work type and area code in schedule.
      1) For wastewater rehabilitation projects, there are six work-type categories. An area code will be assigned for each

Meter Service Area or Basin. Include at least one activity for each unique combination of work type and area code. Normal schedules of wastewater rehabilitation projects contain between 35 and 100 activities, depending on number of basins and work types involved in each basin.

2) For wastewater relief projects (line work), area codes will be assigned geographically.

3) For wastewater plant or facility work, other criteria may apply to assignment of area codes, such as a combination of geographical and craft categories.

b. For projects with multiple types of tasks within scope, indicate types of work separately within schedule.

c. For projects with work at different physical locations or service areas, or different facilities within a site, indicate each location or facility separately within schedule. Show work on each floor of multi-story building as separate tasks.

d. For projects with multiple crafts or significant Subcontractor components, indicate elements separately within schedule. Unless permitted by Project Manager, tasks shall consist of work covered by only one division of Project Manual.

2. Unless permitted by Project Manager, each scheduled task shall be same as Schedule of Values line item, and vice versa.

3. For projects with Major Unit Price Work, indicate Shop Drawing submittal and review, purchase, delivery, and Installation dates on Project schedule. Include activities for testing, adjustment, and delivering O&M manuals.

4. No task except the acquisition of Major Unit Price Work shall represent more than one percent of Original Contract Price for facility projects and three percent of Original Contract Price for other projects. Duration of tasks may not exceed 40 calendar days.

5. For projects where operating facilities are involved, identify each period of work that will impact any process or operation in the schedule and that must be agreed to by Project Manager and facility operator prior to starting work in the area.

D. Construction Schedule submittals shall include:

1. printed bar charts that meet criteria outlined in this Section and are produced by Contractor's approved scheduling software;

2. activity listings that meet criteria outlined in this Section and are produced by Contractor's approved scheduling software; and

3. a predecessor/successor listing sorted by Activity ID that meets criteria outlined in this Section and is produced by Contractor's scheduling software.

4. A logic network diagram is required with the first Construction Schedule submittal for facilities projects.

5. Prepare and submit graphic or tabular display of estimated monthly billings (i.e. a cash flow curve for the Work) with the first schedule submittal. This information is not required in monthly updates, unless significant changes in work require re-submittal of schedule for review. Display shall allocate units indicated in bid schedule or Schedule of Values to Construction Schedule activities. Weighted allocations are acceptable, where appropriate. Dollar value associated with each allocated unit will be spread across the duration of that activity on a monthly basis. Total for each month and cumulative total will be indicated. These monthly forecasts are only for Project Manager's planning purposes. Monthly payments for actual work completed will be made in accordance with Document 00700 - General Conditions.

6. Narrative Report that provides the information outlined in this Section.

E. No payment will be made until Project Manager approves Construction Schedule and billing forecast.

F. If Contractor desires to make changes in its method of operating and scheduling, after Project Manager has reviewed original schedule, notify Project Manager in writing, stating reasons for changes. When Project Manager considers these changes to be significant, Contractor may be required to revise and resubmit for review all or affected portion of Contractor's Construction Schedule to show effect on the Work.

G. Upon written request from Project Manager, revise and submit for review all or any part of Construction Schedule submittal to reflect changed conditions in the Work or deviations made from original schedule.

H. Updated Construction Schedule with actual start and actual finish dates, percent complete, and remaining duration of each activity shall be submitted monthly. Data date used in updating monthly Construction Schedule shall be the same date as used in monthly Payment Application. Monthly update of Construction Schedule is required for monthly Payment Application to be processed for payment.

1.04 SCHEDULING COMPUTER SOFTWARE REQUIREMENTS

A. Contractor's scheduling software shall be capable of creating bar charts and activity listings, which can be sorted by various fields (i.e. Activity ID, Early Start, Total Float, Area Code, Specification Section number, and Subcontractor). Use software capable of producing logic network diagram.

B. Use scheduling software capable of producing activity listings and bar charts with the following information for each activity in the schedule:

1. Activity ID
2. Activity Description
3. Estimated (Original) Duration
4. Remaining Duration
5. Actual Duration
6. Early Start Date
7. Late Start Date
8. Early Finish Date
9. Late Finish Date
10. Free Float
11. Total Float
12. Activity Codes (such as Area Code, Work Type, Specification Section, Subcontractor)

C. Use scheduling software capable of printing calendars using mathematical analysis of schedule, indicating standard workdays of week and scheduled holidays.

D. Use scheduling software capable of printing activity listing that indicates predecessors and successors, lag factors and lag relationships used in creating logic of the schedule.

E. Use scheduling software to provide monthly time in Bar Chart format and scale with 12-month scale not to exceed one page width. Bar charts may be

printed or plotted on 8-1/2 by 11-inch, 8-1/2 by 14-inch or 11 by 17-inch sheet sizes. Over-size plots are not acceptable.

1.05 NARRATIVE SCHEDULE REPORT

A. Narrative schedule report shall list activities started this month, activities completed this month, activities continued this month, activities scheduled to start or complete next month, problems encountered this month, and actions taken to solve these problems.

B. Narrative schedule report shall describe changes made to Construction Schedule logic (i.e. changes in predecessors and lags), activities added to schedule, activities deleted from schedule, any other changes made to the schedule other than addition of actual start dates and actual finish dates and changes of data date and remaining durations for re-calculation of mathematical analysis.

PART 2 P R O D U C T S - Not Used

PART 3 E X E C U T I O N - Not Used

END OF SECTION

Section 01326

CONSTRUCTION SCHEDULE (BAR CHART)

PART 1 G E N E R A L

1.01 SECTION INCLUDES

A. Provide an initial Construction Schedule as required by this section for the Work. Do not start construction until Project Manager reviews the schedule.

1.02 FORM AND CONTENT OF INITIAL CONSTRUCTION SCHEDULE

A. Bar Chart:

1. Show major construction activities such as pipe laying, by traffic control phases or other approved key areas; tunnel construction, pavement removal, pavement replacement, pressure testing, chlorination, clean up and punch list as separate activities on the schedule.

2. Show week duration for each activity.

3. Show separate activities for each Shop Drawing and Product Data submittal critical to timely completion. Show submittal dates and dates Project Manager needs to provide approved submittals.

4. Provide separate horizontal bar for each activity. List start and finish date for each activity at left side of diagram.

5. Horizontal Time Scale: Identify first work day of each week.

6. Scale and Spacing: Notes must be legible. Allow space for notations and future revisions.

7. Order of Listings: Order bar chart listings by phases or other approved groups of activities that are contiguous. List activities in chronological order within each phase or group.

B. Narrative Description:

1. Submit narrative descriptions of anticipated work sequences as indicated by the sequence of activities presented in the schedule.

2. Discuss any activity that affects the public (such as phases of traffic control), interaction with specific forces of the City (such as valve operation, chlorination and testing) or other associated contractors.

1.03 PROGRESS REVISIONS

A. Submit progress revisions or necessary information to complete and process Payment Applications. When required, re-submittals for rejected revisions must be submitted and reviewed prior to the following month's processing of a Payment Application. The following month's Payment Application will not be processed until the re-submittal is reviewed and required progress revisions are received.

B. Provide a narrative report to describe:

1. Major changes in scope.

2. Revised projections in progress, completion, or changes in activity duration.

3. Other identifiable changes.

4. Problem areas, anticipated delays, and the impact on schedule.

5. Corrective action recommended and its effect.

6. Effect of changes on schedules or other contractors.

7. Product delivery lead times.

C. Include additional data with Bar Chart described in Paragraph 1.03A of this Section:

1. Show original dates for each activity in the approved initial progress schedule by narrow bar next to a wider bar for the current schedule.

2. Show date each activity actually started or finished when an event has occurred. Clearly identify actual dates in two right-most columns in left portion of an 11 by 17-inch chart.

3. Indicate the percentage progress to the date of submittal for each activity.

1.04 SUBMITTALS

A. Submit the initial progress schedule within 15 days after award of contract. Project Manager will review the schedule and return a reviewed copy within 21 days after receipt.

B. Cut-off dates for progress revisions may be as early as the 20th of the month to avoid delaying processing of Payment Applications. Use the cut-off date for the first approved revision for further revisions.

C. When required, re-submit within seven days after return of review copy.

D. Include connecting lines between bars in the schedule to indicate the sequence that activities will be accomplished. Connecting lines when the activity's start or finish is modified will identify impact of preceding or succeeding activities. Submit a minimum of six copies of the bar chart on 11 by 17-inch opaque reproductions. Project Manager will retain five copies and return the remaining copy.

PART 2 P R O D U C T S - Not Used

PART 3 E X E C U T I O N - Not Used

END OF SECTION

Section 01330

SUBMITTAL PROCEDURES

PART 1 G E N E R A L

1.01 SECTION INCLUDES

A. Submittal procedures for:

1. Schedule of Values
2. Construction Schedules and Cash Flow Curve (billing forecast).
3. Shop Drawings, Product Data and Samples
4. Operations and Maintenance (O&M) Data
5. Manufacturer's Certificates
6. Construction Photographs
7. Project Record Documents and monthly certification.
8. Video Tapes
9. Design Mixes

1.02 SUBMITTAL PROCEDURES

A. Scheduling and Handling:

1. Submit Shop Drawings, data and Samples for related components as required by Specifications and Project Manager.
2. Schedule submittals well in advance of need for construction Products. Allow time for delivery of Products after submittal approval.
3. Develop submittal schedule that allows sufficient time for initial review, correction, resubmission and final review of all submittals. Allow a minimum of 30 days for initial review. Project Manager will review and return submittals to Contractor as expeditiously as possible but time required for review will vary depending on complexity and quantity of data submitted.

4. Project Manager's review of submittals covers only general conformity to Drawings, Specifications and dimensions that affect layout. Contractor is responsible for quantity determination. No quantities will be verified by Project Manager. Contractor is responsible for errors, omissions or deviations from Contract requirements; review of submittals does not relieve Contractor from the obligation to furnish required items in accordance with Drawings and Specifications.

5. Submit five copies of documents unless otherwise specified.

6. Revise and resubmit submittals as required. Identify all changes made since previous submittal.

7. Assume risk for fabricated Products delivered prior to approval. Do not incorporate Products into the Work, or include payment for Products in periodic progress payments, until approved by Project Manager.

B. Transmittal Form and Numbering:

1. Transmit each submittal to Project Manager with Transmittal letter which includes:
   a. Date and submittal number
   b. Project title and number
   c. Names of Contractor, Subcontractor, Supplier and manufacturer
   d. Identification of Product being supplied
   e. Location of where Product is to be Installed
   f. Applicable Specification section number

2. Identify deviations from Contract documents clouding submittal drawings. Itemize and detail on separate 8-1/2 by 11-inch sheets entitled "DEVIATIONS FOR _____." When no deviations exist, submit a sheet stating no deviations exist.

3. Have design deviations signed and sealed by an appropriate design professional, registered in the State of Texas.

4. Sequentially number transmittal letters beginning with number one. Use original number for resubmittals with an alphabetic suffix (i.e., 2A for the first resubmittal of submittal 2, or 15C for third resubmittal of submittal 15, etc.). Show only one type of work or Product on each submittal. Mixed submittals will not be accepted.

C. Contractor's Stamp:

1. Apply Contractor's Stamp certifying that the items have been reviewed in detail by Contractor and that they comply with Contract requirements, except as noted by requested variances.

2. As a minimum, Contractor's Stamp shall include:
   a. Contractor's name
   b. Job number
   c. Submittal number
   d. Certification statement Contractor has reviewed submittal and it is in compliance with the Contract
   e. Signature line for Contractor

D. Submittals will be returned with one of the following Responses:

1. "ACKNOWLEDGE RECEIPT" when no response and resubmittal is required.

2. "NO EXCEPTION" when sufficient information has supplied to determine that item described is accepted and that no resubmittal is required.

3. "EXCEPTIONS AS NOTED" when sufficient information has been supplied to determine that item will be acceptable subject to changes, or exceptions, which will be clearly stated. When exceptions require additional changes, the changes must be submitted for approval. Resubmittal is not required when exceptions require no further changes.

4. "REJECTED-RESUBMIT" when submittal does not contain sufficient information, or when information provided does not meet Contract requirements. Additional data or details requested by Project Manager must be submitted to obtain approval.

1.03 MANUFACTURER'S CERTIFICATES

A. When required by Specification sections, submit manufacturers' certificate of compliance for review by Project Manager.

B. Place Contractor's Stamp on front of certification.

C. Submit supporting reference data, affidavits, and certifications as appropriate.

D. Product certificates may be recent or from previous test results, but must be acceptable to Project Manager.

1.04 DESIGN MIXES

A. When required by Specification sections, submit design mixes for review.

B. Place Contractor's Stamp, as specified in this section, on the front of each design mix.

C. Mark each mix to identify proportions, gradations, and additives for each class and type of mix submitted. Include applicable test results from samples for each mix. Perform tests and certifications within 12 months of the date of the submittal.

D. Maintain copies of approved mixes at mixing plant.

1.05 CHANGES TO CONTRACT

A. Changes to Contract may be initiated by completing a Request for Information form. Project Manager will provide a response to Contractor by completing the form and returning it to Contractor.

1. If Contractor agrees that the response will result in no increase in cost or time, a Minor Change in the Work will be issued by City Engineer.

2. If Contractor and Project Manager agree that an increase in time or cost is warranted, Project Manager will forward the Request for Proposal for negotiation of a Change Order.

PART 2 P R O D U C T S - Not Used

PART 3 E X E C U T I O N - Not Used

END OF SECTION

Section 01340

SHOP DRAWINGS, PRODUCT DATA, AND SAMPLES

PART 1 G E N E R A L

1.01 SECTION INCLUDES

A. Methods, schedules, and processes to be followed for Shop Drawings, Product Data and Sample submittals.

1.02 REQUIREMENT

A. Submit Shop Drawings, Product Data and Samples as required by Document 00700 - General Conditions and Specification sections, using procedures specified in Section 01330 - Submittal Procedures and the requirements of this Section.

B. Shop Drawings, Product Data and Samples are not considered Contract documents.

1.03 SHOP DRAWING/SUBMITTAL SCHEDULE

A. Submit a separate Shop Drawing submittal schedule at same time the Construction Schedule is submitted. List Products for which Shop Drawings and other submittals are required in the order that they appear in Specifications. Include Product Data and Sample submittals in the schedule. Payment Applications or Certificates for Payment will not be processed until Project Manager has approved the Shop Drawing submittal schedule.

1.04 SHOP DRAWINGS

A. Submit a minimum of seven sets of Shop Drawings and Product Data in a form and quality suitable for microfilming. Review and sign Shop Drawings indicating compliance with the Contract.

B. Place Contractor's Stamp on each drawing as described in Section 01330 - Submittal Procedures.

C. Show the following accurately and distinctly:

1. Field and erection dimensions;

2. Arrangement and section views;

3. Relation to adjacent materials or structure, including complete information for making connections between the Work and work under other contracts;

4. Types of Products and finishes;

5. Parts list and descriptions;

6. Assembly drawings of equipment components and accessories showing respective positions and relationships to the complete equipment package;

7. Identify details by referencing drawing sheet and detail numbers, schedule or room numbers as shown on the Contract drawings, where necessary for clarity.

D. Scale drawings to provide a true representation of the specific equipment or item Furnished.

E. Coordinate and submit components, necessary for Project Manager to adequately review submittal, as a complete package. Reproduction of the Drawings for use in Shop Drawings is not allowed.

F. For major changes to original documents, submit Computer-Aided Design (CAD) drawings on a media acceptable to Project Manager.

1.05 PRODUCT DATA

A. Submit Product Data for review as required in Specifications.

B. Place Contractor's stamp, on each data item submitted, as described in Section 01330 - Submittal Procedures.

C. Mark each copy to identify applicable Products, models, and options to be used in the Work. Where required by Specifications, supplement manufacturers' standard data to provide information unique to the Work.

D. Give manufacturers, trade name, model or catalog designation and applicable reference standard for Products specified only by reference standards.

E. Pre-approved and Pre-qualified Products.

1. For "pre-approved", "pre-qualified" and "approved" Products named in the City standard products list, provide an appropriate list designation,

as described in Section 01630 - Product Substitution Procedures, within 30 days after Notice to Proceed.

2. For Products proposed as alternates to "approved" products, provide information required to demonstrate that the proposed Products meet the level of quality and performance criteria of the "approved" product.

1.06 SAMPLES

A. Submit Samples for review as required by Specifications. Have Samples reviewed and signed by a Registered Professional.

B. Place Contractor's stamp on each Sample or firmly attach a sheet of paper with Contractor's stamp, as described in Section 01330 - Submittal Procedures.

C. Submit the number of Samples specified in Specifications; Project Manager will retain one.

D. Reviewed Samples that may be used in the Work are identified in Specifications.

PART 2 P R O D U C T S - Not Used

PART 3 E X E C U T I O N - Not Used

END OF SECTION

SECTION 01351

ENVIRONMENTAL SAFETY AND WORKER PROTECTION

PART 1 GENERAL

1.01 SECTION INCLUDES

Environmental Safety and Worker Protection including monitoring emissions and exposure to workers and providing an appropriate response. The role of the Certified Industrial Hygienist (CIH) is also defined.

1.02 MEASUREMENT AND PAYMENT

No separate measurement and payment for work performed under this Section. The Contractor shall include the cost for this work in the contract bid price for work of which this is a component part.

1.03 REFERENCES

The following is a list of applicable requirements to this project. It is not intended to be a complete listing of all laws and regulations to which the Contractor must comply.

A. Code of Federal Regulations

1. 29 CFR 1910, "Occupational Safety and Health Standards".

   a. 29 CFR 1910.146 "Permit-required confined spaces".

2. 29 CFR 1926, "Safety and Health Regulations for Construction" (Construction Industry Standards).

   a. 29 CFR 1926.33 "Access to Employee Exposure and Medical Records".

   b. 29 CFR 1926.51, "Sanitation Standard".

   c. 29 CFR 1926.59, "Hazard Communication".

   d. 29 CFR 1926.62, "Lead".

   e. 29 CFR 1926.103 "Respiratory Protection".

3. 40 CFR 50, "National Primary and Secondary Ambient Air Quality

Standards"

a. 40 CFR 50 Appendix B, "Reference Method for the Determination of Suspended Particulate Matter in the Atmosphere (High Volume Method)".

b. 40 CFR 50 Appendix G, "Reference Method for the Determination of Lead in Suspended Particulate Matter Collected from Ambient Air".

4. 40 CFR 58, "Ambient Air Quality Surveillance".

5. 40 CFR 60 Appendix A, "Visual Determination of Fugitive Emissions from Material Sources and Smoke Emissions from Fires".

6. 40 CFR 117, "Determination of Reportable Quantities for Hazardous Substances".

7. 40 CFR 122, "Administered Permit Program: The National Pollutant Discharge Elimination System".

B. National Institute for Occupational Health and Safety

NIOSH Method 7082, "Lead" (or equivalent).

C. American Society for Testing and Materials

ASTM D3335, "Test Method for Low Concentrations for Lead, Cadmium, and Cobalt in Paint by Atomic Absorption Spectroscopy."

D. EPA (Environmental Protection Agency) Publications

1. SW-846, "Test Methods for Evaluating Solid Waste - Physical/Chemical Methods".

2. EPA Method 3050, "Acid Digestion of Sediments, Sludges, and Soils".

E. SSPC Guide 6, "Guide for Containing Debris Generated During Paint Removal Operations".

F. SSPC Guide 7, "Guide for the Disposal of Lead Contaminated Surface Preparation Debris".

G. SSPC Publication 91-18, "Industrial Lead Paint Removal Handbook".

H. Texas Commission on Environmental Quality

1. Texas Administrative Code (TAC) 30, Chapter 101, "General Rules".

2. Texas Administrative Code (TAC) 30, Chapter 111, "Control of Air Pollution from Visible Emissions and Particulate Matter".

3. Texas Administrative Code (TAC) 30, Chapter 290, "Water Hygiene".

4. Texas Administrative Code (TAC) 30, Chapter 307, "Surface Water Quality Standards".

5. Texas Administrative Code (TAC) 30, Chapter 309, "Effluent Limitations".

6. Texas Administrative Code (TAC) 30, Chapter 335, "Industrial Solid Waste and Municipal Hazardous Waste".

1.04 SUBMITTALS

A. Submittals shall conform to requirements of Section 01330 – Submittal Procedures.

B. Submittals shall conform to appropriate codes for regulatory requirements.

1.05 DEFINITION

A. Acceptance Criteria: Minimum standards for the content of programs, plans, procedures, and designs required by this specification for the performance of this project. Acceptance criteria will be the basis for judging the responsiveness of Contractors' programs and will also be used as a basis for suspending work, if necessary.

B. Action Level: Employee exposure, without regard to the use of respirators, to an airborne concentration of lead of 30 micrograms per cubic meter of air (µg/m3) calculated as an eight hour time-weighted average (TWA).

C. CERCLA: Comprehensive Environmental Response, Compensation, and Liability Act; commonly called Superfund. Federal laws addressing the clean up of hazardous waste sites. Amended in 1986 by Superfund Amendments and Re-Authorization Act (SARA). EPA implementing regulations are contained in 40 CFR 300-373.

D. Competent Person: One who is capable of identifying existing and predictable lead hazards in the surroundings or working conditions and who has authorization to take prompt corrective measures to eliminate them.

E. Containment System: An enclosure built around lead paint removal areas designed to contain lead paint debris and prevent emissions to the environment.

F. Dust Collection: Mechanical ventilation system designed specifically for the containment, capture, and removal of airborne particulate from the containment. Dust collection systems shall include ductwork, plenums and/or hoppers, and dust collector(s) for the removal of leaded paint dust from the air stream prior to discharging to the atmosphere.

G. Emission: A release of material to the air, water, or ground.

H. Entry/Exit Airlock: An isolated enclosure located at the entrance of the containment in which the workers remove contaminated dust and debris from their work clothes.

I. EPA: The US. Environmental Protection Agency. Regulations are contained in Title 40 of the Code of Federal Regulations (40 CFR).

J. Hazardous Waste (lead paint debris): Waste that is classified as hazardous due to its concentrations of regulated hazardous substances. Paint debris is classified as hazardous waste if, after testing by the Toxicity Characteristic Leaching Procedure (TCLP), the leachate contains any of the 8 metals or other substances in concentrations at or above limits established in 40 CFR 261.

K. HEPA: A high efficiency particulate filter (HEPA) that is 99.97% efficient against particles of 0.3 microns in size or larger.

L. Lead Containing Dust and Debris: Dust and debris generated during the project which contains lead in any amount, including but not limited to pulverized paint, spent abrasive, filters (wet and dry), and containment materials upon which lead is still present.

M. NIOSH: National Institute of Occupational Safety and Health.

N. OSHA: Occupational Safety and Health Administration. Standards are contained in Title 29 of the Code of Federal Regulations, Parts 1910 and 1926 (29 CFR 1910 and 29 CFR 1926).

O. Owner: The City of Houston

P. PEL: Permissible Exposure Limit. An employee exposure, without regard to the use of respirators, to an airborne concentration of lead of 50 µg/m3 over an 8 hour TWA.

Q. POTW: Publicly Owned Treatment Works

R. RCRA: Resource Conservation and Recovery Act. Federal law pertaining to hazardous waste management. EPA implementing regulations are contained in 40 CFR 240-280.

S. Regulated Area: Area established by the Contractor to demarcate the zone(s) beyond which airborne concentrations of lead do not exceed the Action Level.

T. SSPC: Society for Protective Coatings. An independent, non-profit organization of engineers, technical specialists, and Contractors whose goal is research and development of new coatings and methods for removal, application, and disposal of existing coatings on industrial structures.

U. Tarpaulins: Flexible fabric, vinyl, plastic or canvas cover sheets, impenetrable to dust, wind, and water, used to enclose the cable and/or scaffold support system comprising the containment enclosure.

V. TCLP: Toxicity Characteristic Leaching Procedure. Laboratory tests conducted on wastes that determine the amount of hazardous materials that leach out into a test solution. The test is intended to simulate the properties of water as it leaches through a solid waste landfill. TCLP testing is defined in 40 CFR 261, Appendix II.

W. TSP: Total Suspended Particulate

PART 2 PRODUCTS

2.01 MATERIAL AND EQUIPMENT

A. The Contractor is to supply materials and equipment to insure the safety and protection of workers and the environment in accordance with these specifications.

PART 3 EXECUTION

3.01 ENVIRONMENTAL PROTECTION AND MONITORING

NOTE: Section 09971 "Painting and Protective Coatings", 2.04 "Containment System" specifically identifies containment system requirements.

A. Protection of Ambient Air: Visible emissions are to be controlled to meet, as a minimum, TAC 30 Chapter 111," Control of Air Pollution from Visible Emissions and Particulate Matter" requirements and SSPC-Guide 6I (CON), Level 1 Emissions. Air monitoring and analysis may be performed by the City during abrasive blast cleaning operations. Such monitoring will be in accordance with 40

CFR 50, Appendix B, "Reference Method for the Determination of Suspended Particulate Matter in the Atmosphere" and/or 40 CFR 50, Appendix G, "Reference Method for the Determination of Lead in Suspended Particulate Matter Collected from Ambient Air". The limits for down wind pollutant concentrations allowed during blasting operations are as follows:

PM-10: 450 micrograms/cubic meter/ 8 hr.. (40 CFR 50.6)

Lead (Pb): 13.5 micrograms/cubic meter/8 hr.. (40 CFR 50.12)

Visible emissions and/or monitored emissions for PM-10 and TSP lead in excess of the above levels shall be cause for shut down of the project until corrections to control/ containment system or paint removal/ surface preparation operations are made to comply with these requirements.

B. Protection of Surface and Storm Water: The Contractor shall take all necessary precautions to ensure lead contaminants do not enter surface waters or storm water drainage systems.

1. The Contractor shall protect the area around ditches and drainage inlets. Daily verification of proper protection to minimize the potential contaminants reaching the drainage system shall be performed.

2. The Contractor shall collect all potentially contaminated process waters for testing and, as appropriate, treatment. Process water from pressure washing, wet abrasive blast cleaning or hygiene facilities shall not be discharged to drainage systems or surface waters.

3. The Contractor may remove lead or other heavy metals from such waters through filtration, ion exchange or other approved means. Following treatment, water samples must be tested prior to disposal. Discharge to sanitary sewer lines requires authorization, in writing, from a POTW.

C. Protection of Soil and Grounds: The Contractor shall protect the soil around the structure to ensure that the soil does not become contaminated. Where lead is present in the coatings to be removed, as indicated in Section 02136 "Waste Material Handling and Disposal", the Contractor shall provide for the sampling and analysis of soil samples for total lead content.

1. Sampling and analysis shall be performed prior to commencement of paint removal operations to establish a background "base level". Soil samples shall be taken 3 feet from the base of the tank(s), at a distance of 6-10 feet beyond the proposed containment structure and at the property line.

2. Samples from each area shall be taken in a minimum of four directions, at

circular increments of 90^0, one of which shall include the direction of prevailing wind. Samples shall also be obtained, at the direction of the engineer, at the closest points of public access (i.e. housing, park, school).

3. The soil sampling procedure shall be as outlined in SSPC Guide 6 Section 5.5.5. Each sampling point shall be sufficiently identified on a site map to allow return to the exact location upon project completion.

4. Each sample shall be split in two portions, one for immediate analysis and the other sealed, preserved and furnished to the Engineer. The samples shall be analyzed in accordance with EPA Method 3050, "Acid Digestion of Sediments, Sludges and Soils", and shall be performed by a qualified laboratory approved by the Engineer.

5. Samples shall be obtained at the completion of work (post-construction samples) from all locations from which pre-construction samples were obtained. Samples shall be collected, handled and tested in the same manner as described above.

6. Upon completion of the work, soils found to be contaminated with lead in greater quantity than found in the background "base level", established at the start of the work, shall be removed by the Contractor to the depth necessary to achieve a lead content equivalent to, or below, the pre-construction back ground levels. Disposal shall be in accordance with applicable regulations.

7. The Contractor shall replace in-kind (i.e., topsoil, structural fill, etc.) with an equivalent amount of non-contaminated soil, compact in place and grade to pre-existing conditions. The Contractor shall also replace in-kind any surface improvements, such as grass, shrubs, etc. that were damaged or destroyed by the work. The soil removal, replacement and related work is to be performed by the Contractor at no additional cost to the Owner.

3.02 WORKER PROTECTION

A. The Contractor shall develop a written Compliance Program to establish and implement practices and procedures for assuring that no employee is exposed to lead at concentrations greater than 50 micrograms per cubic meter of air ($\mu g/m^3$), the OSHA permissible exposure limit (PEL). This program is in addition to other OSHA hazard communication and safety and health requirements of the project, and shall be revised and updated at least every six months.

1. The program shall establish methods for complying with this specification and the OSHA Construction Industry Lead Standard, 29 CFR 1926.62(e)(2)(ii). The Federal regulation is referred to as the "Lead

Standard" for the purpose of this specification.

2. The program shall apply to all Contractor employees associated with lead on the project, and to subcontractors working under the direct control of the Contractor who are associated with lead on the project.

3. The program shall assign the specific responsibility for implementation and enforcement of the program to the Contractors' company management. The Contractor's Competent Person(s) shall be identified, by name, and qualifications submitted. The Competent Person shall be on-site during any operations which involve the removal, handling or disturbing of lead containing materials.

4. The program shall contain a description of each activity in which lead is emitted (e.g. equipment used, material involved, controls in place, crew size, employee job responsibilities, operating procedures and maintenance practices).

5. The program shall contain a report of the technology considered in meeting the PEL and air monitoring data which documents the source of lead emissions.

6. The program shall contain a work practice program which includes items required in the lead standard such as protective clothing and equipment, housekeeping, and hygiene facilities and practices.

B. Exposure Monitoring: The Contractor shall be responsible for conducting and reporting worker exposure assessments in accordance with 29 CFR 1926.62.

1. Representative personal air samples shall be collected at the beginning of the lead removal work to determine employee lead exposures. Tasks involving potential lead exposure include, but are not limited to, paint removal operations, clean-up, and debris handling operations. Full shift (at least 7 hours) air samples shall be collected for each job classification in the exposure area. The range of exposures for lead removal and cleanup activities shall be determined.

2. During the initial monitoring, workers performing the following activities (or equivalent) shall be protected to the anticipated exposure levels which are dictated by the lead standard:

   a. 500 $\mu g/m^3$: Manual demolition of structures containing lead-containing coatings or paint (e.g., dry wall), manual scraping, manual sanding, heat gun applications, power tool cleaning with dust collection systems, and spray painting with lead paint.

b. 2,500 $\mu g/m^3$: Using lead-containing mortar, lead burning, or conducting the following activities where lead-containing coatings or paint are present: rivet busting, power tool cleaning without dust collection systems, clean-up activities where dry expendable abrasives are used, and the movement and removal of abrasive blasting enclosures.

c. More than 2,500 $\mu g/m^3$: Activities involving lead containing coatings or paint on structures disturbed by abrasive blasting, welding, cutting, and torch burning.

3. Protection requires compliance with the necessary respiratory protection, personal protective clothing and equipment, change areas and washing facilities, blood lead and zinc protoporphyrin monitoring, and employee training. The protection measures shall be modified, as necessary, after the exposure results are received.

4. Where initial monitoring indicates that lead exposures are below the Action Level, and where work activities and conditions remain the same as at the time of initial sampling, additional monitoring need not be repeated for that work activity.

5. Where the initial monitoring of a given work activity indicates that lead exposures are at or above the Action Level, additional exposure monitoring shall be conducted monthly. The monthly monitoring is more frequent than frequencies established in the lead standard which are at least every 6 months if above the Action Level, but below the PEL, or every 3 months if above the PEL.

6. All air samples shall be collected and analyzed according to NIOSH Method 7082, or equivalent. All samples shall be analyzed by laboratories accredited by the American Industrial Hygiene Association for metals analysis.

7. All exposed employees shall be notified in writing of the monitoring results within five (5) days after receiving the results.

8. The Action Level for airborne lead exposure is 30 $\mu g/m^3$, as an 8-hour time weighted average (TWA) concentration, without regard to the use of respirators. Whenever workers' airborne lead exposures exceed the Action Level, the Contractor shall implement the following:

   a. Periodic Exposure Monitoring
   b. Employee Information and Training

c. Employee Medical Surveillance and Medical Removal Protection
d. Housekeeping
e. Record keeping
f. Signs and Regulated Areas

9. The Permissible Exposure Limit (PEL) for airborne lead exposure is 50 $\mu g/m^3$, as an 8-hour TWA concentration. When the work area contains airborne lead levels above the PEL the Contractor shall implement the following in addition to those items listed in 3.02.B.8 of this section:

a. Compliance Program
b. Respiratory Protection
c. Protective Clothing and Equipment
d. Hygiene Facilities and Practices

C. Respiratory Protection: After feasible engineering controls and work practices have been implemented, respiratory protection shall be used to maintain employees' lead exposures below the PEL.

1. Respirators shall be worn by all employees, other Contractors, inspectors, or observers who enter regulated areas.

2. The Contractor shall develop a written Respiratory Protection Program in compliance with 29 CFR 1910.134, paragraphs (b), (d), (e), and (f), and the lead standard. The program shall address the selection, use, maintenance, and inspection of respirators, and qualifications for respirator users.

D. Protective Clothing and Equipment: The Contractor shall provide protective clothing and equipment and ensure they are worn by all employees whose lead exposures exceed the PEL, or who enter regulated areas.

1. Protective clothing shall include washable and/or disposable full body coveralls, gloves, foot coverings, and hoods. Other protective equipment shall include face shields, hard hats, eye protection, and hearing protection as appropriate.

2. Disposable protective clothing shall be used for no more than one work day. Such clothing may have to be disposed of as hazardous waste.

3. Reusable protective equipment shall be cleaned or replaced weekly if exposure levels are less than 200 $\mu g/m^3$, or daily if the exposure levels are greater than or equal to 200 $\mu g/m^3$.

4. Clothing shall not be removed or "cleaned" by any means which could reintroduce the lead dust into the ambient air. This includes brushing,

shaking, and blowing. Vacuums equipped with HEPA filters shall be used for this purpose.

5. Reusable coveralls shall be collected at the end of each work day in closed containers. The containers shall be labeled in accordance with the requirements of 29 CFR 1926.62(g)(2)(vii). Contaminated clothing shall be cleaned in accordance with all applicable Federal, State, or local regulations pertaining to lead-contaminated laundry and water discharge. Laundries shall be informed that the clothing contains lead. If the clothing is washed on site, the discharge water shall be filtered, containerized, and arrangements made with the local POTW or other approved means of proper disposal.

6. Protective clothing and equipment shall be removed in the contaminated section of the change area and shall not be worn into any clean areas.

7. The Contractor shall provide the necessary clothing and equipment for use by the Owner and its designated representatives.

E. Housekeeping: Accumulations of lead-containing dust and debris generated by work activities shall be removed and cleaned daily.

1. All persons doing the cleanup shall be trained in performing lead activities, respirator qualified, and participate in the medical surveillance program. Respirators and protective clothing shall be worn by all persons doing the cleanup.

2. Compressed air may be used for housekeeping if used within containment and in conjunction with a ventilation system designed to capture the dust. Otherwise, HEPA-filtered vacuum cleaners shall be employed.

3. All lead-containing dust and debris shall be collected in sealed containers. The waste shall be tested to determine whether it will be disposed of as hazardous waste.

F. Personal Hygiene Facilities and Practices

1. Clean change areas shall be provided when employees' lead exposures exceed the PEL. The change areas shall be equipped with storage facilities for street clothing and a separate area for the removal and storage of lead-contaminated clothing and equipment. They shall be designed and used so that contamination of street clothing does not occur. Employees shall not leave the project site wearing any clothing worn while performing lead activities. Airborne lead exposures in the change area shall be maintained below the Action Level.

2. Shower facilities shall be provided whenever employees' lead exposures exceed the PEL. Shower facilities shall comply with OSHA Sanitation Standard, 29 CFR 1929.51. All employees whose lead exposures exceed the PEL shall shower at the end of each work shift or before leaving the project area. The shower facilities shall be made available for use by the Owner and its representatives, such as inspectors or observers.

3. Arrangements shall be made with the local POTW for the proper disposal of the shower and wash water after filtration (e.g., through a three stage 100, 50, and 5 micron filtering system), ion exchange, or other approved treatment technology.

4. Clean lunch areas shall be provided for all employees whose lead exposures exceed the PEL. Employees shall remove or clean (by vacuuming) their protective clothing and wash their hands and face before entering the lunch area. Lead exposures in the lunch area shall be maintained as free as practicable from lead contamination.

5. An adequate number of clean lavatory and hand washing facilities shall be provided. These shall comply with the OSHA Sanitation Standard, 29 CFR 1929.51.

6. Eating, drinking, smoking, chewing of food or tobacco products, or the application of cosmetics shall not be permitted in any areas where the lead exposures exceed the PEL. Thorough washing of hands and face is required prior to undertaking any of these activities.

G. Medical Surveillance and Medical Removal Protection

1. All employees who are exposed to lead above the Action Level in a single day during this project shall be provided with initial and periodic medical examinations and blood lead tests as required by the lead standard. A final blood lead test shall be provided for each worker upon completion of the project, or at any time a worker's employment at the project ceases.

2. When blood lead levels over 50 µg/dl are encountered, the Contractor shall provide for the temporary removal of employees from lead exposure above the Action Level. The required medical surveillance and periodic blood lead tests shall be provided in strict accordance with the lead standard throughout the removal.

3. Employees who will be required to wear a respirator or who request one shall be provided with a respirator and the necessary medical examinations to determine their ability to wear a respirator.

4. All examinations shall be provided by the Contractor and shall be performed by or under the direct supervision of a licensed physician.

H. Employee Information and Training

1. The Contractor shall provide lead training for all employees who are exposed to lead above the Action Level for this project.

2. The content of lead training shall include, as a minimum, those items listed in the lead standard.

3. Training shall also include hazard communication in accordance with 29 CFR 1926.59.

4. The Contractor shall notify other employers at the project site of the nature of the lead exposure work, the need to remain out of exposure areas, the warning sign and labeling system in effect, and the potential need for them to take measures to protect their employees.

I. Signs and Regulated Areas

1. The Contractor shall establish a regulated area surrounding activities where lead exposures exceed the Action Level. This includes locations where lead-containing debris is handled or transferred to storage containers.

2. The regulated area shall be demarcated by ropes, tape, walls, or containment's with caution signs posted at all accessible sides. Signs shall contain the legend:

WARNING
LEAD WORK AREA
POISON
NO SMOKING OR EATING

3. The Contractor shall control access of persons into regulated areas. Access shall be limited to individuals with proper training and personal protective equipment, and medical surveillance testing.

4. All persons entering regulated areas shall wear protective clothing and respirators.

5. Eating, drinking, smoking, and chewing of food or tobacco products shall be prohibited in regulated areas and in any area where lead exposures exceed the Action Level.

J. Record keeping: All records relating to training, medical examinations, blood lead monitoring, and exposure monitoring shall be maintained by the Contractor as required by the lead standard. All records shall be available for review by the Owner or its representative upon request.

3.03 CERTIFIED INDUSTRIAL HYGIENIST (CIH)

A. The Contractor shall provide for the services of a Certified Industrial Hygienist (CIH) who must be certified by the American Board of Industrial Hygiene in comprehensive practice.

B. Duties of the CIH shall be as follows:

1. Conduct and/or verify training for contractor employees in accordance with 29 CFR 1926.62 (l).

2. Review and approve Contractor's Written Compliance Plan for conformance to 29 CFR 1926.62(e)(2)(ii) and this Specification.

3. Monitor and evaluate work weekly to assure conformance with the approved plan and that hazardous exposure is adequately controlled in accordance with worker safety and health requirements of these specifications

4. Provide monthly reports of work compliance with control requirements in regards to working in a lead environment.

C. Activities of the CIH shall include:

1. Meet with City to discuss details of Contractor's Written Compliance Plan for lead paint removal.

2. Ensure worker and area air monitoring, testing and reporting are conducted by or under the direction of the CIH.

3. Furnish a detailed worker and area air monitoring schedule coordinated with Contractor's proposed production schedule.

4. Directing, monitoring and inspecting lead paint removal work to ensure that the requirements of the Contract have been satisfied during the entire lead paint removal operation.

5. Report results of air monitoring samples to the Engineer, signed by the CIH within 48 hours after the air samples are taken.

6. The CIH shall review sampling data, collected on a day when lead paint

removal operations occur, to determine if conditions require any change in work methods. Removal work shall not continue until approval is given by the CIH.

7. The CIH shall verify in writing and submit monitoring data to verify that:

   a. Air borne lead levels at and beyond the lead control (regulated) area were and remained less than 30 mg/m^3 of air

   b. Contractor conformance to 29 CFR 1926.62 and Item 3.02, above

   c. There were no visible accumulations of lead contaminated paint, dust or debris on the work site. Adjacent areas that may have become contaminated were properly cleaned and inspected.

   d. The CIH shall verify that the work area and contractor's equipment have been adequately cleaned of lead contamination prior to demobilization from the work site.

3.04 DEMOBILIZATION

The Contractor shall not remove the lead control area, boundaries, warning signs, etc. prior to proper removal of all hazardous wastes, debris and materials from the site and the City's receipt and acceptance of the CIH's verification.

END OF SECTION

Section 01410

TPDES REQUIREMENTS

1.01 SECTION INCLUDES

A. Documentation to be prepared and signed by Contractor/Operator before conducting construction operations, in accordance with the Texas Pollutant Discharge Elimination System (TPDES) Construction General Permit Number TXR 150000 issued February 15, 2008 (the Construction General Permit).

B. Implementation, maintenance inspection, and termination of storm water pollution prevention control measures including, but not limited to, erosion and sediment controls, storm water management plans, waste collection and disposal, off-site vehicle tracking, and other appropriate practices shown on the Drawings or specified elsewhere in the Contract.

C. Review of the Storm Water Pollution Prevention Plan (SWP3) implementation in a meeting with Project Manager prior to start of construction.

1.02 DEFINITIONS

A. Commencement of Construction Activities: The exposure of soil resulting from activities such as clearing, grading, and excavation activities, as well as other construction related activities (e.g., stock piling of fill material, demolition).

B. Large Construction Activity: Project that:o

1. disturbs five acres or more, or

2. disturbs less than five acres but is part of a larger common plan of development that will disturb five acres or more of land.

C. Small Construction Activity: Project that:

1. disturbs one or more acres but less than five acres, or

2. disturbs less than one acre but is part of a larger common plan of development that will ultimately disturb one or more acres but less than five acres.

D. TPDES Operator:

Operator - The person or persons associated with a large or small construction activity that is either a primary or secondary as defined below:

Primary Operator – the person or persons associated with a large or small construction activity that meets either of the following two criteria:

(a) the persons have operational control over construction plans and specifications, including the ability to make modifications to those plans and specifications; or

(b) the person or persons have day-to-day operational control of those activities at a construction site that are necessary to ensure compliance with a storm water pollution prevention plan (SWP3) for the site or other permit conditions (e.g., they are authorized to direct workers at a site to carry out activities required by the SWP3 or comply with other permit conditions).

Secondary Operator – The person whose operational control is limited to the employment of other operators or to the ability to approve or disapprove changes to plans and specifications. A secondary operator is also defined as a primary operators if there are no other operators if there are no other operators at the construction site.

PART 2 P R O D U C T S - Not Used

PART 3 E X E C U T I O N

3.01 SITE SPECIFIC STORM WATER POLLUTION PREVENTION PLAN (SWP3)

A. Prepare a SWP3 following Part III of the Construction General Permit and the Storm Water Management Handbook for Construction Activities issued under City Ordinance Section 47-695(b). If conflicts exist between the Construction General Permit and the handbook, the more stringent requirements will apply.

B. Update or revise the SWP3 as needed during the construction following Part III, Section E of the Construction General Permit.

C. Submit the SWP3 and any updates or revisions to Project Manager for review and address comments prior to commencing, or continuing, construction activities.

3.02 NOTICE OF INTENT For Large Construction Activity

A. Fill out, sign, and date TCEQ Form 20022 (03/05/2008) Notice of Intent (NOI) for Storm Water Discharges Associated with Construction Activity under the TPDES Construction General Permit (TXR 150000), **ATTACHMENT 1** of this Section 01410.

B. Transmit the signed Contractor's copy of TCEQ Form 20022 (03/05/2008), along with a $325.00 check, made out to Texas Commission on Environmental Quality, and the completed Payment Submittal Form to Project Manager.

C. Project Manager will complete a separate TCEQ Form 20022 (03/05/2008) for City's Notice of Intent, and will submit both Notices, along with checks for application fees, to the TCEQ.

D. Submission of the Notice of Intent form by both the City and Contractor to TCEQ if mailing is required a minimum of seven days before Commencement of Construction Activities.

3.03 CONSTRUCTION SITE NOTICE FOR SMALL CONSTRUCTION ACTIVITY

A. Fill out, sign, and date the Construction Site Notice, Attachment 2 to TPDES General Permit TXR 150000, "Construction Site Notice", **ATTACHMENT 2** of this Section 01410.

B. Transmit the signed Construction Site Notice to Project Manager at least seven days prior to Commencement of Construction Activity.

3.04 CERTIFICATION REQUIREMENTS

A. Fill out TPDES Operator's Information form, **ATTACHMENT 3** of this Section 01410, including Contractor's name, address, and telephone number, and the names of persons or firms responsible for maintenance and inspection of erosion and sediment control measures. Use multiple copies as required to document full information.

B. Contractor and Subcontractors shall sign and date the Contractor's / Subcontractor's Certification for TPDES Permitting, **ATTACHMENT 4** of this Section 01410. Include this certification with other Project certification forms.

C. Submit properly completed certification forms to Project Manager for review before beginning construction operations.

D. Conduct inspections in accordance with TCEQ requirements. Ensure persons or firms responsible for maintenance and inspection of erosion and sediment control measures read, fill out, sign, and date the Erosion Control Contractor's Certification for Inspection and Maintenance. Use the City of Houston Storm Water Pollution Prevention Plan, Construction Site Inspection Report, **ATTACHMENT 5** of this Section 01410 to record maintenance inspections and repairs.

3.05 RETENTION OF RECORDS

A. Keep a copy of this document and the SWP3 in a readily accessible location at the construction site from Commencement of Construction Activity until submission of the Notice of Termination (NOT) for Storm Water Discharges Associated with Construction Activity under TPDES Construction General Permit (TXR 150000). Contractors with day-to-day operational control over SWP3 implementation shall have a copy of the SWP3 available at a central location, on-site, for the use of all operators and those identified as having responsibilities under the SWP3. Upon submission of the NOT, submit all required forms and a copy of the SWP3 with all revisions to Project Manager.

3.06 REQUIRED NOTICES

A. Post the following notices from effective date of the SWP3 until date of final site stabilization as defined in the Construction General Permit:

1. Post the TPDES permit number for Large Construction Activity, with a signed TCEQ Construction Site Notice for large or Small Construction Activity. Signed copies of the City's and Contractor's NOI must also be posted.

2. Post notices near the main entrance of the construction site in a prominent place where it is safely and readily available for viewing by General Public, Local, State, and Federal Authorities. Post name and telephone number of Contractor's local contact person, brief project description and location of the SWP3.

   a. If posting near a main entrance is not feasible due to safety concerns, coordinate posting of notice with Project Manager to conform to requirements of the Construction General Permit.

   b. If Project is a linear construction project (e.g.: road, utilities, etc.), post notice in a publicly accessible location near active construction. Move notice as necessary.

3. Post a notice to equipment and vehicles operators, instructing them to stop, check, and clean tires of debris and mud before driving onto traffic lanes. Post at each stabilized construction access area.

4. Post a notice of waste disposal procedures in a readily visible location on site.

3.07 ON-SITE WASTE MATERIAL STORAGE

A. On-site waste material storage shall be self-contained and shall satisfy appropriate local, state, and federal rules and regulations.

B. Prepare list of waste material to be stored on-site. Update list as necessary to include up-to-date information. Keep a copy of updated list with the SWP3.

C. Prepare description of controls to reduce pollutants generated from on-site storage. Include storage practices necessary to minimize exposure of materials to storm water, and spill prevention and response measures consistent with best management practices. Keep a copy of the description with the SWP3.

3.08 NOTICE OF TERMINATION

A. Submit a NOT, **ATTACHMENT 7** of this Section 01410, to Project Manager within 30 days after:

1. Final stabilization has been achieved on all portions of the site that are the responsibility of the Contractor; or

2. Another operator has assumed control over all areas of the site that have not been stabilized; and

3. All silt fences and other temporary erosion controls have either been removed, scheduled to be removed as defined in the SWP3, or transferred to a new operator if the new operator has sought permit coverage.

B. Project Manager will complete City's NOT and submit Contractor and City's notices to the TCEQ and MS4 entities.

END OF SECTION

PAGE LEFT INTENTIONALLY BLANK

ATTACHMENT 1

Notice of Intent (NOI) for Storm Water Discharges Associated with Construction Activity under the TPDES Construction General Permit (TXR150000)

TCEQ

For help completing this application, read the TXR150000 NOI Instructions (TCEQ-20022-Instructions).

TCEQ Office Use Only
TPDES Permit Number: TXR15|__|__|__|__| - NO
GIN Number: |__|__|__|__|__|__|__|

A. Construction Site Operator ☐New ☐No Change Customer Reference Number: CN_____
Name:_____
Mailing Address:_____ City:_____ State:____ Zip Code:_____
Country Mailing Information (*if outside USA*) Territory:_____ Country Code:_____ Postal Code:_____
Phone Number:_____ Extension:_____ Fax Number:_____
E-mail Address:_____
Type of Operator: ☐ Individual ☐ Sole Proprietorship - D.B.A. ☐ Partnership ☐ Corporation ☐ Federal Government
☐ State Government ☐ County Government ☐ City Government ☐ Other:_____
Independent Operator? ☐ Yes ☐ No Number of Employees: ☐ 0-20 ☐ 21-100 ☐ 101-250 ☐ 251-500 ☐ 501 or higher
Federal Tax ID:_____ State Franchise Tax ID Number:_____ DUNS Number:_____

B. Billing Address
Name:_____
Mailing Address:_____ City:_____ State:____ Zip Code:_____
Country Mailing Information (*if outside USA*) Territory:_____ Country Code:_____ Postal Code:_____

C. Project / Site Information ☐New ☐No Change Regulated Entity Reference Number: RN_____
Name:_____
Mailing Address:_____ City:_____ State:____ Zip Code:_____
Physical Address:_____ City:_____ County:_____ Zip Code:_____
Location Access Description:_____
Latitude:___°___'___" N Longitude:___°___'___" W Degrees (°), Minutes ('), and Seconds (")
Latitude:_____ Longitude: -_____ Decimal Form
Standard Industrial Classification (SIC) code:_____ Also, describe the construction activity at this site (*do not repeat the SIC code*):
_____
Has a storm water pollution prevention plan been prepared as specified in the general permit (TXR150000)? ☐Yes ☐No
Estimated area of land disturbed (to the nearest acre):_____ Is the project / site located on Indian Country Lands? ☐ Yes ☐ No
Does this project / site discharge storm water into a municipal separate storm sewer system (MS4)? ☐Yes ☐No
If yes, provide the name of the MS4 operator:_____
Provide the name or segment number of the water body that receives storm water from this project / site:_____

D. Contact - If the TCEQ needs additional information regarding this application, who should be contacted?
Name:_____ Title:_____
Phone Number:_____ Extension:_____ Fax Number:_____
E-mail Address:_____

E. Payment Information - Check / Money Order Number:_____ Name on Check / Money Order:_____

F. Certification
I certify under penalty of law that this document was prepared under my direction or supervision in accordance with a system designed to assure that qualified personnel properly gather and evaluate the information submitted. Based on my inquiry of the person or persons who manage the system, or those persons directly responsible for gathering the information, the information submitted is, to the best of my knowledge and belief, true, accurate, and complete. I am aware there are significant penalties for submitting false information, including the possibility of fine and imprisonment for knowing violations.

Construction Site Operator:
Prefix:_____ First:_____ Middle:_____
Last:_____ Suffix:_____ Title:_____
Signature:_____ Date:_____

If you have questions on how to fill out this form or about the storm water program, please contact us at (512) 239-4671.
Individuals are entitled to request and review their personal information that the agency gathers on its forms. They may also have any errors in their information corrected. To review such information, contact us at (512) 239-3282.

The completed NOI must be mailed to the following address. Use the attached document to submit the $100 application fee. Please note that the NOI and application fee are submitted separately to different addresses.

Texas Commission on Environmental Quality
Storm Water & General Permits Team; MC - 228
P.O. Box 13087
Austin, Texas 78711-3087

TCEQ-20022 (05/03) **Page 1 of 2**

ATTACHMENT 1

Texas Commission on Environmental Quality
Payment Submittal Form

The storm water application fee shall be sent under separate cover to the Texas Commission on Environmental Quality.

This form must be used to submit your Storm Water Application Fee. Please complete the following information, staple your check in the space provided at the bottom of this document, and mail it to:

BY REGULAR U.S. MAIL

Texas Commission on Environmental Quality
Financial Administration Division
Cashier's Office, MC-214
P.O. Box 13088
Austin, TX 78711-3088

BY OVERNIGHT/EXPRESS MAIL

Texas Commission on Environmental Quality
Financial Administration Division
Cashier's Office, MC-214
12100 Park 35 Circle
Austin, TX 78753

Fee Code: GPA

Storm Water General Permit: TXR150000

Check / Money Order No: _____

Amount of Check/Money Order: _____

Date of Check or Money Order: _____

Name on Check or Money Order: _____

Facility / Site Name: _____

Facility / Site Physical Address: _____

City: _____ Zip Code: _____

Staple Check In This Space

ATTACHMENT 1

Completing the Notice of Intent for Storm Water Discharges Associated with Construction Activity under the TPDES Construction General Permit (TXR150000)

A. Construction Site Operator Information

Check boxes and Customer Reference Number
These boxes designate the operator's status as a TCEQ "customer"—in other words, an individual or business that is involved in an activity that we regulate. We assign each customer a number that begins with "CN," followed by nine digits. ***This is not a permit number, registration number, or license number.*** In the remainder of this section, we will use "this customer" to mean the operator for Part A of the form.

- If this customer has not been assigned a Customer Reference Number or if this number is unknown, check "New" and leave the space for the Customer Reference Number blank.
- If this customer has already been assigned this number, enter the operator's Customer Reference Number and:
  - Check "No Change" if all the remaining customer information is the same as previously reported. However, you must still complete most blanks in this form for this notice of intent to be valid.
  - If this customer's information has changed since the last time it was reported to the TCEQ, check neither box and complete the remainder of this notice of intent.
- ***Do not enter a permit number, registration number, or license number in place of the Customer Reference Number.***

Name
Enter the legal name of this customer as authorized to do business in Texas. Include any abbreviations (LLC, Inc., etc.).

Mailing Address
Enter a central and general mailing address for this customer to receive mail from the TCEQ. For example, if this customer is a large company, this address might be the corporate or regional headquarters. On the other hand, for a smaller business, this address could be the same as the site address.

If this is a street address, please follow US Postal Service standards. In brief, these standards require this information in this order:

- the "house" number—for example, the 1401 in 1401 Main St
- if there is a direction before the street name, the one- or two-letter abbreviation of that direction (N, S, E, W, NE, SE, SW, or NW)
- the street name (if a numbered street, do not spell out the number—for example, 6th St, not Sixth St)
- an appropriate abbreviation of the type of street—for example, St, Ave, Blvd, Fwy, Exwy, Hwy, Cr, Ct, Ln
- if there is a direction after the street name, the one- or two-letter abbreviation of that direction (N, S, E, W, NE, SE, SW, or NW)
- if there is a room number, suite number, or company mail code

City, State, *and* ZIP Code
Enter the name of the city, the two-letter USPS abbreviation for the state (for example, TX), and the ZIP Code. (Enter the full ZIP+4 if you know it.)

Country Mailing Information
If this address is ***outside*** the United States, enter the territory name, country code, and any non-ZIP mailing codes or other non–U.S. Postal Service features here. If this address is ***inside*** the United States, leave these spaces blank.

Phone Number *and* Extension
This number should correspond to this customer's mailing address given earlier. Enter the area code and phone number here. Leave "Extension" blank if this customer's phone system lacks this feature.

Fax Number
This number should correspond to this customer's mailing address given earlier. Enter the area code and fax number here.

E-mail Address
As with the mailing address, this should be a general address that is appropriate for e-mail to this customer's central or regional headquarters, if applicable.

If "No Change" was checked for this customer, you may skip the rest of the fields in this part of the form and continue to the next part of the NOI.

Type of Operator
Check ***only one*** box.

Check ...	*if this customer* .
Individual	is a person and has not established a business to do whatever causes them to be regulated by us.
Sole Proprietorship—D.B.A.	is a business that is owned by only one person and has not been incorporated. This business may: • be under the person's name • have its own name ("doing business as" or d.b.a.) • have any number of employees
Partnership	is a business that is established as a partnership as defined by the Texas Secretary of State's Office.
Corporation	meets all of these conditions: • is a legally incorporated entity under the laws of any state or country • is recognized as a corporation by the Texas Secretary of State • has proper operating authority to operate in Texas
Federal, state, county, or city government (as appropriate)	is either an agency of one of these levels of government or the governmental body itself (If a utility district, water district, tribal government, college district, council of governments, or river authority, check "Other" and write in the specific type of government.)
Other	fits none of the above descriptions. Enter a short description of the type of customer in the blank provided.

Independent Operator?
Check "No" if this customer is a subsidiary or part of a larger company. Otherwise, check "Yes."

Number of Employees
Check one box to show the number of employees for this customer's entire company, at all locations. ***This is not necessarily the number of employees at the site named in this NOI.***

Federal Tax ID
All businesses, except for some small sole proprietors, should have a federal taxpayer identification number (TIN). Enter this number here. Use no prefixes, dashes, or hyphens. Individuals and sole proprietors do not need to provide a federal tax ID.

State Franchise Tax ID
Corporations and limited liability companies that operate in Texas are issued a franchise tax identification number. If this customer is a corporation or limited liability company, enter this number here.

DUNS Number
Most businesses have a DUNS (Data Universal Numbering System) number issued by Dun and Bradstreet Corp. If this customer has one, enter it here.

B. Billing Address

We will mail the annual fee invoice for this site to the address entered in this section.

Name
Enter the legal name of the person or business to which we should mail this site's fee invoice each year.

Mailing Address
Enter the specific mailing address to which we should mail this site's fee invoice each year. If this is a street address, please follow the US Postal Service standards as described under "A. Construction Site Operator Information" on page 1 of these instructions.

City, State, *and* ZIP Code
Enter the name of the city, the two-letter USPS abbreviation for the state (for example, TX), and the ZIP Code. (Enter the full ZIP+4 if you know it.)

Country Mailing Information
If this address is ***outside*** the United States, enter the territory name, country code, and any non-ZIP mailing codes or other non–U.S. Postal

ATTACHMENT 1

Service features here. If this address is ***inside*** the United States, leave these spaces blank.

C. Project / Site Information

Check boxes *and* Regulated Entity Reference Number
These boxes designate this site's status as a TCEQ "regulated entity"—in other words, a location where an activity that we regulate occurs. We assign each regulated entity a number that begins with "RN," followed by nine digits. ***This is not a permit number, registration number, or license number.***

- If this site has not been assigned a Regulated Entity Reference Number or if this number is unknown, check "New" and leave the space for the Regulated Entity Reference Number blank.
- If this site has already been assigned this number, enter the Regulated Entity Reference Number and:
  - Check "No Change" if all the remaining information is the same as previously reported. However, even if there has been no change, you must complete this section at least through "E-mail Address" for this NOI to be valid.
  - If this site's information has changed since the last time it was reported to the TCEQ, check neither box and complete the remainder of this notice of intent.
- ***Do not enter a permit number, registration number, or license number in place of the Regulated Entity Reference Number.***

Name
Enter the name by which you want this site to be known to the TCEQ.

Mailing Address
Enter the specific mailing address for this site. If this is a street address, please follow the US Postal Service standards as described under "A. Construction Site Operator Information" on page 1 of these instructions. If the project / site's mailing address is the same as what is provided in Section A, you may enter "Same as Section A".

City, State, *and* ZIP Code
Enter the name of the city, the two-letter USPS abbreviation for the state (for example, TX), and the ZIP Code. (Enter the full ZIP+4 if you know it.)

Physical Address
Enter the physical address of the site itself. TCEQ staff should be able to use this address to find the site. Please follow the US Postal Service standards as described under "A. Construction Site Operator Information" on page 1 of these instructions. If the project / site does not have a physical address, enter "No Address".

City, County, *and* ZIP Code
Enter the name of the city, the county, and the ZIP Code. (Enter the full ZIP+4 if you know it.) This information must be provided even if you have entered "No Address" in the previous field.

Location Access Description
Enter a physical description of the location of the site based on highway intersections and/or permanent landmarks.

Latitude *and* Longitude
Enter the latitude and longitude of the site in ***either*** degrees, minutes, and seconds ***or*** decimal form.

For help obtaining the latitude and longitude, go to:
http://www.tnrcc.state.tx.us/gis/drgview.html

Standard Industrial Classification (SIC) Code and Activity Description

Provide the SIC code that best describes the construction activity being conducted at the site.

For help with SIC codes, go to:
http://www.osha.gov/oshstats/sicser.html

In addition to the SIC code, you must also provide a description of the construction activity being conducted at the site. This may include such descriptions as: "Apartment Building Construction" or "Shopping Center Construction."

Storm Water Pollution Prevention Plan
This plan identifies the areas and activities that could produce contaminated runoff at your site and then tells how you will ensure that this contamination is mitigated. For example, in describing your mitigation measures, your site's plan might identify the devices that collect and filter storm water, tell how those devices are to be maintained, and tell how frequently that maintenance is to be carried out. ***You must develop this plan before you complete this NOI.*** This plan must be available for a TCEQ investigator to review on request. Specific requirements for the development of the plan can be found in the *Texas Pollutant Discharge Elimination System Construction General Permit (TXR150000)*.

Estimated Area of Land Disturbed
Provide the approximate number of acres that the construction site will disturb. It is appropriate to enter a value less than 5, only if the project is part of a larger common plan that disturbs five or more acres. If the acreage is less than 1, enter 1. "Disturb" means any clearing, grading, excavating, or other similar activities.

Is the site located on Indian Country Lands?
Check "Yes" only if the site is on a reservation or other areas designated by the federal government as Indian Country Lands. If not, check "No."

Destination of Storm Water Discharge
The storm water from your site eventually reaches a receiving water body such as a local stream or lake, possibly via a drainage ditch. The discharge may initially be into a municipal separate storm sewer system (MS4). Check the appropriate boxes for whether storm water is discharged into an MS4. If you checked "Yes" to "An MS4?", then enter the name of the entity that operates the storm sewer—often a city, town, or utility district, but possibly another form of government.

You must also provide the name of the water body that receives the discharge from the construction site (a local stream or lake). Storm water may be discharged directly to a receiving stream or via a storm sewer system. If known, please include the segment number if the discharge is to a classified water body.

For a map that includes segment numbers, go to:
http://www.tnrcc.state.tx.us/water/quality/data/index.html

D. Contact

Give all the relevant information for the person whom TCEQ can contact if there are questions about any of the information on this form—perhaps the same person who completed the form.

E. Payment Information

Provide the number and account holder name from the check or money order used to pay the $100 application fee.

F. Certification

The operator must sign and date this statement to validate this NOI. Be sure to enter the full legal name of the person signing the form and the relevant title—for example, "Operator," "Vice-President," or "Partner." Use the "Prefix" blank for such titles as Dr., Mr., or Ms., as desired. Use the "Suffix" blank for such designations as Ph.D., Jr., Sr., III, or J.D., if applicable.

For a corporation, the application shall be signed by a responsible corporate officer. A responsible corporate officer means a president, secretary, treasurer, or vice-president of the corporation in charge of a principal business function, or any other person who performs similar policy or decision-making functions for the corporation; or the manager of one or more manufacturing, production, or operating facilities employing more than 250 persons or having gross annual sales or expenditures exceeding $25 million (in second-quarter 1980 dollars), if authority to sign documents has been assigned or delegated to the manager in accordance with corporate procedures. Corporate procedures governing authority to sign permit applications may provide for assignment or delegation to applicable corporate positions rather than to specific individuals.

For a partnership or sole proprietorship, the application shall be signed by a general partner or the proprietor, respectively.

For a municipality, state, federal, or other public agency, the application shall be signed by either a principal executive officer or a ranking elected official. For purposes of this application, a principal executive officer of a federal agency includes the chief executive officer of the agency, or a senior executive officer having responsibility for the overall operations of a principal geographic unit of the agency (e.g. regional administrator of the United States Environmental Protection Agency).

Questions?

If you have questions about any of the information on this form, contact our Storm Water Program at 512/239-4671 or look for "Storm Water" on our Web site:

www.tceq.state.tx.us

ATTACHMENT 2

CONSTRUCTION SITE NOTICE

FOR THE
Texas Commission on Environmental Quality (TCEQ)
Storm Water Program

TPDES GENERAL PERMIT TXR150000

The following information is posted in compliance with **Part II.D.2.** of the TCEQ General Permit Number TXR150000 for discharges of storm water runoff from construction sites. Additional information regarding the TCEQ storm water permit program may be found on the internet at:
www.tnrcc.state.tx.us/permitting/waterperm/wwperm/tpdestorm

Contact Name and Phone Number:	
Project Description: (Physical address or description of the site's location, estimated start date and projected end date, or date that disturbed soils will be stabilized)	
Location of Storm Water Pollution Prevention Plan :	

For Construction Sites Authorized Under Part II.D.2. (Obtaining Authorization to Discharge) the following certification must be completed:

I _____ (Typed or Printed Name Person Completing This Certification) certify under penalty of law that I have read and understand the eligibility requirements for claiming an authorization under Part II.D.2. of TPDES General Permit TXR150000 and agree to comply with the terms of this permit. A storm water pollution prevention plan has been developed and implemented according to permit requirements. A copy of this signed notice is supplied to the operator of the MS4 if discharges enter an MS4 system. I am aware there are significant penalties for providing false information or for conducting unauthorized discharges, including the possibility of fine and imprisonment for knowing violations.

_____ _____
Signature and Title Date

PAGE LEFT INTENTIONALLY BLANK

ATTACHMENT 3

TPDES OPERATOR'S INFORMATION

Owner's Name and Address: City of Houston

Mr. _____
(City Official)

_____
(Department)
P. O. Box 1562
Houston, Texas 77251-1562
(713) 247-1000

Contractors' Names and Addresses:

General Contractor: _____
_____
_____
_____
Telephone: _____

Site Superintendent: _____
_____
_____
_____
Telephone: _____

Erosion Control and
Maintenance Inspection: _____
_____
_____
_____
Telephone: _____

Subcontractors' Names and Addresses:

_____ _____
_____ _____
_____ _____
_____ _____
Phone: _____ Phone: _____

Note: Insert name, address, and telephone number of person or firms

PAGE LEFT INTENTIONALLY BLANK

ATTACHMENT 4

CONTRACTOR'S / SUBCONTRACTOR'S

CERTIFICATION FOR TPDES PERMITTING

I certify under penalty of law that I understand the terms and conditions of TPDES General Permit No. TXR150000 and the Storm Water Pollution Prevention Plan for the construction site identified as part of this certification.

Signature: _____

Name: (printed or typed) _____

Title: _____

Company: _____

Address: _____

Date: _____

Signature: _____

Name: (printed or typed) _____

Title: _____

Company: _____

Address: _____

Date: _____

Signature: _____

Name: (printed or typed) _____

Title: _____

Company: _____

Address: _____

Date: _____

PAGE LEFT INTENTIONALLY BLANK

ATTACHMENT 5

EPA NPDES Construction Inspection Form

The following inspection is being performed in compliance with Part IV.D.4. of the NPDES Region 6 Storm Water Construction General Permit [63 Fed. Reg. 36502] and being retained in accordance with Part V of the Permit. Qualified personnel (provided by the permittee or cooperatively by multiple permittees) shall inspect disturbed areas of the construction site that have not been finally stabilized, areas used for storage of materials that are exposed to precipitation, placement and effectiveness of structural control measures, and locations where vehicles enter or exit the site. Inspections shall be performed at least once every 14 days and within 24 hours of the end of a storm event of 0.5 inches or greater. Where sites have been temporarily stabilized, runoff is unlikely due to winter conditions, or during seasonal arid periods in arid areas (0-10 inches of rainfall annually) and semi-arid areas (10-20 inches annually) such inspections shall be conducted at least once every month. This form is primarily intended for use with construction projects in Texas and New Mexico. Permittees on Indian Country lands in Oklahoma, Louisiana and Arkansas and some oil and gas facilities in Oklahoma may use this form if they are eligible for this permit. Other facilities need to check with their NPDES authority before using this form.

If you do not know your NPDES Permit Number, contact the NOI Processing Center at (301)495-4145. This form was prepared as an example and it is not a required form for use with the permit. Alternative forms may be used if they contain all of the required information as set forth in the permit. This form and additional information regarding the NPDES Region 6 storm water program may be found on the Internet at http://www.epa.gov/region6/sw/. Any person with a complaint about the operation of this facility in regards to this permit should contact EPA Region 6 at (214)665-7112.

Permit Number(s) covered by this inspection (e.g. owners, developers, general contractor, builders)	
Signature and Certification in accordance with Part VI.G of the permit:	I certify under penalty of law that this document and all attachments were prepared under my direction or supervision in accordance with a system designed to assure that qualified personnel properly gathered and evaluated the information submitted. Based on my inquiry of the person or persons who manage the system, or those persons directly responsible for gathering the information, the information submitted is, to the best of my knowledge and belief, true, accurate, and complete. I am aware that there are significant penalties for submitting false information, including the possibility of fine and imprisonment for knowing violations. Signature_____Date_____
Date of Inspection	
Inspector Name	
Is there a copy of the permit language with the SWPPP?	❒ YES ❒ NO
Is the inspector qualified and are the qualifications documented in the SWPPP?	❒ YES ❒ NO
Is an NPDES storm water construction sign posted at the entrance for all permittees?	❒ YES ❒ NO

You may want to use EPA Region 6 construction checklist to assure components of the SWPPP are complete. This form, the construction sign, and the checklist are available on the Region 6 NPDES Storm Water Forms and Documents web page which may be found on the internet at http://www.epa.gov/earth1r6/6en/w/formsw.htm In addition to the checklist, you should provide a narrative (see next page) on the existing Best Management Practices and Structural Controls found during each inspection. Any problems identified in an inspection should be corrected within 7 days. The inspection should cover all components of the SWPPP and all potential pollutants. While eroded soil is the primary pollutant of concern, do not forget to inspect for other pollutant sources such as fuel tanks, paints, solvents, stabilization materials, concrete hardner, batch plants, and construction debris. The inspector will need to update the SWPPP to reflect findings of the inspection. The site map should be updated after an inspection to show controls that have been added or removed, to ensure the site map is kept current in accordance with Part IV.C. of the permit.

Revision 4, March 1, 2000

ATTACHMENT 5

Narrative Findings of the inspection:

Observations should include any findings of Best Management Practices or controls that are not in accordance with the SWPPP. If a control is not in place or failed, observe the reason why. A control removed temporarily for work is not necessarily a violation if properly recorded in the SWPPP. If it has been removed, record why it was removed and, if applicable, when it will be reinstalled. If the control has failed, observe the conditions so a conclusion may be made as to wether the control failed for improper maintenance or improper design. The qualified inspector will know when a failed control is inadequate and should be replaced by an improved control mechanism. Qualified inspectors are to have authority to make changes to the SWPPP to assure compliance. Controls that have not been installed should be given a reason why they are not installed and/or a scheduled date for installation if they are designed for a later phase of construction. After the inspection, the SWPPP and its site map should be updated to reflect current conditions of controls and Best Management Practices at the time of the inspection. This includes removing uninstalled controls from the site map or otherwise denoting on the site map if they are no longer installed if the controls have been removed because they are no longer necessary (e.g. stabilization has been achieved in that area).

ATTACHMENT 6

City of Houston

Storm Water Pollution Prevention Plan
Construction Site Inspection Report

TPDES/EPA Permit Number _____

COH Storm Water Quality Permit Number _____

DATE _____

No exceptions noted.

The following must be corrected prior to continuing work:

Public Notice improperly posted

Initial Construction Site Inspection Report information requires updating

Copy of NOI not on site

Storm water pollution prevention plan not on site

Erosion and sediment controls improperly installed

Erosion and sediment control devices improperly maintained

Fueling or washout areas not properly protected

Portocan or other sanitary facilities not properly protected

Self-inspection and maintenance records incomplete

Sediment from site outside area of construction

Other (see description below)

_____

_____

Please contact the Storm Water Quality Engineer at
611 Walker, RA-257, Houston TX 77002
713-837-7383 fax 713-837-0570

Once the above items have been corrected, call to arrange for reinspection. No further inspections for any construction related activity shall be made until the above items have been corrected.

Inspector's Signature	Contractor's Signature
Inspector's Name	Contractor's Name

not present

Distribution Stormwater Quality Engineer, Code Enforcement, Inspector, Operator
(Operator is Contractor)

Form _____ (10-01-01)

PAGE LEFT INTENTIONALLY BLANK

ATTACHMENT 7

Notice of Termination (NOT) for Storm Water Discharges Associated with Construction Activity under the TPDES Construction General Permit (TXR150000)

TCEQ Office Use Only
TPDES Permit Number: TXR15|__|__|__|__|__| - NO
GIN Number: __|__ __|__ __|__|__|

For help completing this application, read the TXR150000 NOI Instructions (TCEQ-20023-Instructions).

A. TPDES Permit Number: TXR15_____

B. Construction Site Operator Customer Reference Number: CN_____
Name:_____
Mailing Address:_____
City:_____ State:_____ Zip Code:_____
Country Mailing Information (*if outside USA*) Territory:_____ Country Code:_____ Postal Code:_____
Phone Number:_____ Extension:_____ Fax Number:_____
E-mail Address:_____

C. Project / Site Information Regulated Entity Reference Number: RN_____
Name:_____
Physical Address:_____
Location Access Description:_____
City:_____ County:_____ Zip Code:_____

D. Contact - If the TCEQ needs additional information regarding this termination, who should be contacted?
Name:_____ Title:_____
Phone Number:_____ Extension:_____ Fax Number:_____
E-mail Address:_____

E. Certification
I certify under penalty of law that authorization under the TPDES Construction General Permit (TXR150000) is no longer necessary based on the provisions of the general permit. I understand that by submitting this Notice of Termination, I am no longer authorized to discharge storm water associated with construction activity under the general permit TXR150000, and that discharging pollutants in storm water associated with construction activity to waters of the U.S. is unlawful under the Clean Water Act where the discharge is not authorized by a TPDES permit. I also understand that the submittal of this Notice of Termination does not release an operator from liability for any violations of this permit or the Clean Water Act.

Construction Site Operator Representative:

Prefix:_____ First:_____ Middle:_____
Last:_____ Suffix:_____
Title:_____
Signature:_____ Date:_____

If you have questions on how to fill out this form or about the storm water program, please contact us at (512) 239-4671. Individuals are entitled to request and review their personal information that the agency gathers on its forms. They may also have any errors in their information corrected. To review such information, contact us at (512) 239-3282.

The completed NOT must be mailed to the following address:

Texas Commission on Environmental Quality
Storm Water & General Permits Team; MC - 228
P.O. Box 13087
Austin, Texas 78711-3087

TCEQ - 20023 (02/03) **Page 1 of 1**

PAGE LEFT INTENTIONALLY BLANK

ATTACHMENT 7

Completing the Notice of Termination for Storm Water Discharges Associated with Construction Activity under the TPDES Construction General Permit (TXR150000)

Who May File a Notice of Termination (NOT) Form
Permittees disturbing 5 acres or more (or part of a larger common plan of development or sale disturbing 5 acres or more) who are presently covered under the Texas Pollutant Discharge Elimination System (TPDES) Construction General Permit must submit a Notice of Termination (NOT) when final stabilization has been achieved on all portions of the site that is the responsibility of the permittee; or another permitted operator has assumed control over all areas of the site that have not been finally stabilized and all silt fences and other temporary erosion controls have either been removed, scheduled for removal as defined in the SWP3, or transferred to a new operator if the new operator has sought permit coverage. Erosion controls that are designed to remain in place for an indefinite period, such as mulches and fiber mats, are not required to be removed or scheduled for removal.

Final Stabilization occurs when either of the following conditions are met:

(a) All soil disturbing activities at the site have been completed and a uniform (e.g, evenly distributed, without large bare areas) perennial vegetative cover with a density of 70% of the native background vegetative cover for the area has been established on all unpaved areas and areas not covered by permanent structures, or equivalent permanent stabilization measures (such as the use of riprap, gabions, or goetextiles) have been employed.

(b) For individual lots in a residential construction site by either:

(1) the homebuilder completing final stabilization as specified in condition (a) above; or

(2) the homebuilder establishing temporary stabilization for an individual lot prior to the time of transfer of the ownership of the home to the buyer and after informing the homeowner of the need for, and benefits of, final stabilization.

(c) For construction activities on land used for agricultural purposes (e.g. pipelines across crop or range land), final stabilization may be accomplished by returning the disturbed land to its preconstruction agricultural use. Areas disturbed that were not previously used for agricultural activities, such as buffer strips immediately adjacent to a surface water and areas which are not being returned to their preconstruction agricultural use must meet the final stabilization conditions of condition (a) above.

A. TPDES Permit Number
Provide the TPDES permit number assigned to the operator of the construction site.

B. Construction Site Operator Information
Customer Reference Number
This number designates the operator's status as a TCEQ "customer"—in other words, an individual or business that is involved in an activity that we regulate. We assign each customer a number that begins with "CN," followed by nine digits. ***This is not a permit number, registration number, or license number.*** In the remainder of this section, we will use "this customer" to mean the operator for Part B of the form.

- If this customer has not been assigned a Customer Reference Number, leave the space for the Customer Reference Number blank.
- If this customer has already been assigned this number, enter the operator's Customer Reference Number.
- ***Do not enter a permit number, registration number, or license number in place of the Customer Reference Number.***

Name
Enter the legal name of this customer as authorized to do business in Texas. Include any abbreviations (LLC, Inc., etc.).

Mailing Address
Enter a central and general mailing address for this customer to receive mail from the TCEQ. For example, if this customer is a large company, this address might be the corporate or regional headquarters. On the other hand, for a smaller business, this address could be the same as the site address.

If this is a street address, please follow US Postal Service standards. In brief, these standards require this information in this order:

- the "house" number—for example, the 1401 in 1401 Main St
- if there is a direction before the street name, the one- or two-letter abbreviation of that direction (N, S, E, W, NE, SE, SW, or NW)
- the street name (if a numbered street, do not spell out the number—for example, 6th St, not Sixth St)
- an appropriate abbreviation of the type of street—for example, St, Ave, Blvd, Fwy, Exwy, Hwy, Cr, Ct, Ln
- if there is a direction after the street name, the one- or two-letter abbreviation of that direction (N, S, E, W, NE, SE, SW, or NW)
- if there is a room number, suite number, or company mail code

City, State, *and* ZIP Code
Enter the name of the city, the two-letter USPS abbreviation for the state (for example, TX), and the ZIP Code. (Enter the full ZIP+4 if you know it.)

ATTACHMENT 7

Country Mailing Information
If this address is ***outside*** the United States, enter the territory name, country code, and any non-ZIP mailing codes or other non–U.S. Postal Service features here. If this address is ***inside*** the United States, leave these spaces blank.

Phone Number *and* Extension
This number should correspond to this customer's mailing address given earlier. Enter the area code and phone number here. Leave "Extension" blank if this customer's phone system lacks this feature.

Fax Number
This number should correspond to this customer's mailing address given earlier. Enter the area code and fax number here.

E-mail Address
As with the mailing address, this should be a general address that is appropriate for e-mail to this customer's central or regional headquarters, if applicable.

C. Project / Site Information

Regulated Entity Reference Number
This number designates this site's status as a TCEQ "regulated entity"—in other words, a location where an activity that we regulate occurs. We assign each regulated entity a number that begins with "RN," followed by nine digits. ***This is not a permit number, registration number, or license number.***

- If this site has not been assigned a Regulated Entity Reference Number, leave the space for the Regulated Entity Reference Number blank.
- If this site has already been assigned this number, enter the Regulated Entity Reference Number.
- ***Do not enter a permit number, registration number, or license number in place of the Regulated Entity Reference Number.***

Name
Enter the name by which you want this site to be known to the TCEQ.

Physical Address
Enter the physical address of the site itself. TCEQ staff should be able to use this address to find the site.

Location Description
Enter a physical description of the location of the site based on highway intersections and/or permanent landmarks.

City, County, *and* ZIP Code
Enter the name of the city, the county, and the ZIP Code. (Enter the full ZIP+4 if you know it.)

D. Contact

Give all the relevant information for the person whom TCEQ can contact if there are questions about any of the information on this form—perhaps the same person who completed the form.

E. Certification

The operator must sign and date this statement to validate this NOI. Be sure to enter the full legal name of the person signing the form and the relevant title—for example, "Operator," "Operator's attorney," or "Senior Site Manager." Use the "Prefix" blank for such titles as Dr., Mr., or Ms., as desired. Use the "Suffix" blank for such designations as Ph.D., Jr., Sr., III, or J.D., if applicable.

For a corporation, the application shall be signed by a responsible corporate officer. A responsible corporate officer means a president, secretary, treasurer, or vice-president of the corporation in charge of a principal business function, or any other person who performs similar policy or decision-making functions for the corporation; or the manager of one or more manufacturing, production, or operating facilities employing more than 250 persons or having gross annual sales or expenditures exceeding $25 million (in second-quarter 1980 dollars), if authority to sign documents has been assigned or delegated to the manager in accordance with corporate procedures. Corporate procedures governing authority to sign permit applications may provide for assignment or delegation to applicable corporate positions rather than to specific individuals.

For a partnership or sole proprietorship, the application shall be signed by a general partner or the proprietor, respectively.

For a municipality, state, federal, or other public agency, the application shall be signed by either a principal executive officer or a ranking elected official. For purposes of this application, a principal executive officer of a federal agency includes the chief executive officer of the agency, or a senior executive officer having responsibility for the overall operations of a principal geographic unit of the agency (e.g. regional administrator of the United States Environmental Protection Agency).

Questions?

If you have questions about any of the information on this form, contact our Storm Water Program at 512/239-4671 or look for "Storm Water" on our Web site:
www.tceq.state.tx.us

Section 01422

REFERENCE STANDARDS

PART 1 G E N E R A L

1.01 SECTION INCLUDES

A. Section includes general quality assurance as related to Reference Standards and a list of references.

1.02 QUALITY ASSURANCE

A. For Products or workmanship specified by association, trade, or Federal Standards, comply with requirements of the standard, except when more rigid requirements are specified or are required by applicable codes.

B. Conform to reference standard by date of issue current on the date as stated in the General Conditions.

C. Request clarification from Project Manager before proceeding should specified reference standards conflict with Contract documents.

1.03 SCHEDULE OF REFERENCES

AASHTO	American Association of State Highway and Transportation Officials 444 North Capitol Street, N.W. Washington, DC 20001
ACI	American Concrete Institute P.O. Box 9094 Farmington Hills, MI 48333-9094
AGC	Associated General Contractors of America 333 John Carlyle Street Alexandria, VA 22314
AI	Asphalt Institute Research Park Drive P.O. Box 14052 Lexington, KY 40512

AITC	American Institute of Timber Construction 7012 S. Revere Parkway, Suite 140 Englewood, CO 80112
AISC	American Institute of Steel Construction One East Wacker Dr. Chicago, IL 60601
AISI	American Iron and Steel Institute 1101 17th Street NW, Suite 1300 Washington, DC 20036
ASME	American Society of Mechanical Engineers Three Park Avenue New York, NY 10016
ANSI	American National Standards Institute 1819 L Street NW Sixth Floor Washington, D.C. 20036
APA	American Plywood Association Box 11700 Tacoma, WA 98411
API	American Petroleum Institute 1220 L Street, N.W. Washington, DC 20005
AREA	American Railway Engineering and Maintenance-of-Way-Association 8201 Corporate Drive, Suite 1125 Landover, Maryland 20785
ASTM	American Society for Testing and Materials 100 Barr Harbor Drive West Conshohocken, PA 19428
AWPA	American Wood-Preservers' Association P.O. Box 5690 Granbury, TX 76049
AWS	American Welding Society 550 NW 42nd Avenue Miami, FL 33126

AWWA	American Water Works Association 6666 West Quincy Avenue Denver, CO 80235
COH	City of Houston P.O. Box 1562 Houston, TX 77251-1562
CLFMI	Chain Link Fence Manufacturers Institute 9891 Broken Land Parkway, Suite 300 Columbia, MD 21046
CRSI	Concrete Reinforcing Steel Institute 933 Plum Grove Road Schaumburg, IL 60173-4758
EJMA	Expansion Joint Manufacturers Association 25 North Broadway Tarrytown, NY 10591
FS	Federal Standardization Documents General Services Administration Specifications Unit (WFSIS) 7th and D Streets, S.W. Washington, DC 20406
ICEA	Insulated Cable Engineer Association P.O. Box 440 S. Yarmouth, MA 02664
IEEE	Institute of Electrical and Electronics Engineers 445 Hoes Lane P.O. Box 440 Piscataway, NJ 08855-459
ISA	International Society of Arboriculture P.O. Box 3129 Champaign, IL 61826-3129
MIL	Military Specifications General Services Administration Specifications Unit (WFSIS) 7th and D Streets, S.W. Washington, DC 20406

NACE	National Association of Corrosion Engineers 1440 South Creek Drive Houston, TX 77084-4906
NEMA	National Electrical Manufacturers' Association 1300 North 17th Street, Suite 1847 Rosslyn, VA 22209
NFPA	National Fire Protection Association 1 Batterymarch Park P.O. Box 9101 Quincy, MA 02269-9101
OSHA	Occupational Safety Health Administration U.S. Department of Labor Office of Public Affairs – Room N3647 Washington, DC 20210
PCA	Portland Cement Association 5420 Old Orchard Road Skokie, IL 60077-1083
PCI	Prestressed Concrete Institute 209 W. Jackson Blvd. Chicago, IL 60606
SDI	Steel Deck Institute P.O. Box 25 Fox River Grove, IL 60021
SSPC	Society for Protective Coatings (Steel Structures Painting Council) 40 24th Street, Sixth Floor Pittsburgh, PA 15222
TAC	Texas Administrative Code Texas Water Resources Conservation Commission P. O. Box 13087 Library MC-196 Austin, TX 78711-3087
TxDOT	Texas Department of Transportation 125 East 11th Street Austin, TX 78701-2483

UL	Underwriters' Laboratories, Inc. 333 Pfingston Road Northbrook, IL 60062
UNI-BELL	UNI-BELL Pipe Association 2655 Villa Creek Drive, Suite 155 Dallas, TX 75234

PART 2 P R O D U C T S - Not Used

PART 3 E X E C U T I O N - Not Used

END OF SECTION

Section 01450

CONTRACTOR'S QUALITY CONTROL

PART 1 G E N E R A L

1.01 SECTION INCLUDES

A. Quality assurance and control of Installation and manufacturers' field services and reports.

1.02 QUALITY ASSURANCE AND CONTROL OF INSTALLATION

A. Monitor quality control over Suppliers, manufacturers, Products, services, site conditions and workmanship, to produce work of specified quality at no additional cost to the City.

B. Comply fully with manufacturers' Installation instructions, including each step in sequence.

C. Request clarification from Project Manager before proceeding when manufacturers' instructions conflict with the Contract.

D. Comply with specified standards as minimum requirements for the Work except when more stringent tolerances, codes, or specified requirements indicate higher standards or more precise workmanship.

E. Perform the Work by persons qualified to produce a specified level of workmanship.

1.03 REFERENCES

A. Obtain copies of standards and maintain at job site when required by individual Specification sections.

1.04 MANUFACTURERS' FIELD SERVICES AND REPORTS

A. When specified in individual Specification sections, or as required by Project Manager, provide Product suppliers' or manufacturers' technical representative to observe site conditions, conditions of surfaces and Installation, quality of workmanship, start-up of equipment, operator training, testing, adjusting and balancing of equipment as applicable and to initiate required operation. Conform to minimum time requirements for start-up operations and operator training when provided in Specification sections.

B. At Project Manager's request, submit qualifications of manufacturers' representative to Project Manager 15 days in advance of required representatives' services. Representative is subject to approval by Project Manager.

C. Manufacturer's representatives shall report observations and site decisions or instructions given to applicators or installers that are supplemental or contrary to a manufacturer's written instructions. Submit report within 14 days of observation to Project Manager for review.

PART 2 P R O D U C T S - Not Used

PART 3 E X E C U T I O N - Not Used

END OF SECTION

Section 01452

INSPECTION SERVICES

PART 1 G E N E R A L

1.01 SECTION INCLUDES

A. Inspection services and references

1.02 INSPECTION

A. City Engineer will appoint an Inspector to represent the City and perform inspections, tests, and other services specified in individual Specification sections.

B. City Engineer may also appoint, employ, and pay an independent firm to provide additional inspection or construction management services as indicated in Section 01454 - Testing Laboratory Services.

C. The independent firm will submit reports to Project Manager, indicating observations and results of tests and indicating compliance or noncompliance with Contract requirements.

D. Contractor shall assist and cooperate with the Inspector; furnish samples of materials, design mix, equipment, tools, and storage.

E. Contractor shall notify Project Manager 24 hours prior to expected time for operations requiring services.

F. Contractor shall sign and acknowledge reports for Inspector.

PART 2 P R O D U C T S - Not Used

PART 3 E X E C U T I O N - Not Used

END OF SECTION

Section 01454

TESTING LABORATORY SERVICES

PART 1 G E N E R A L

1.01 SECTION INCLUDES

A. Testing laboratory services and Contractor responsibilities related to those services.

1.02 REFERENCES

A. ASTM C 1077 - Standard Practice for Laboratories Testing Concrete and Concrete Aggregates for Use in Construction and Criteria for Laboratory Evaluation.

B. ASTM D 3666 - Standard Specification for Minimum Requirements for Agencies Testing and Inspecting Bituminous Paving Materials.

C. ASTM D 3740 - Standard Practice for Minimum Requirements for Agencies Engaged in the Testing and/or Inspection of Soil and Rock as Used in Engineering Design and Construction.

D. ASTM E 329 - Standard Specification for Minimum Requirements for Agencies Engaged in the Testing and/or Inspection of Materials Used in Construction.

E. ISO/TEC Guide 25 - General Requirements for the Competence of Calibration and Testing Laboratories.

1.03 SELECTION AND PAYMENT

A. The City will select, employ, and pay for services of an independent testing laboratory to perform inspection and testing identified in Part 3 of individual Specification sections.

B. Contractor shall employ and pay for services of an independent testing laboratory or laboratories to perform inspection and testing identified in Part 2 of individual Specification sections.

C. Employment of a testing laboratory by the City shall not relieve Contractor of its obligation to perform work in accordance with requirements of Contract documents.

D. The City will deduct a minimum two-hour charge for testing laboratory time from periodic progress payment when operations requiring testing or inspection are canceled without prior notification.

E. The City will deduct cost of retesting from periodic progress payment whenever failed work is removed, replaced and retested.

1.04 QUALIFICATION OF LABORATORY

A. Meet laboratory requirements of ASTM E 329 and applicable requirements of ASTM C 1077, ASTM D 3666, and ASTM D 3740.

B. Meet ISO/TEC Guide 17025 conditions for accreditation by the American Association for Laboratory Accreditation (A2LA) in specific fields of testing required in individual Specification sections.

C. If laboratory subcontracts are part of the testing services, such work will be placed with a laboratory complying with the requirements of this Section.

1.05 LABORATORY REPORTS

A. Testing laboratory shall provide and distribute copies of laboratory reports to the distribution list Project Manager provides at the pre-construction conference.

B. Keep one copy of each laboratory report distributed or faxed at the site field office for duration of the Work.

C. Laboratory will fax material supplier, Contractor and Project Manager reports that indicate failing test results by no later than close of business on the working day following test completion and review.

1.06 LIMITS ON TESTING LABORATORY AUTHORITY

A. Laboratory may not release, revoke, alter, or enlarge requirements of the Contract.

B. Laboratory may not approve or accept any portion of the Work.

C. Laboratory may not assume Contractor duties.

D. Laboratory has no authority to stop the Work.

1.07 CONTRACTOR RESPONSIBILITIES

A. Provide safe access to the Work and to manufacturer's facilities for Project Manager and for testing laboratory personnel.

B. Provide testing laboratory with a copy of the Construction Schedule and a copy of each update to Construction Schedule.

C. Notify Project Manager and testing laboratory during normal working hours of the day previous to expected time for operations requiring inspection and testing services. When Contractor fails to make timely prior notification, do not proceed with the operations requiring inspection and testing services.

D. Notify Design Consultant 24 hours in advance when Specification requires presence of Design Consultant for sampling or testing.

E. Request and monitor testing as required to provide timely results and to avoid delays to the Work. Provide samples to laboratory in sufficient time to allow required test to be performed in accordance with specified test methods before intended use of the Product.

F. Cooperate with laboratory personnel in collecting samples on site. Provide incidental labor and facilities for safe access to the Work to be tested, to obtain and handle samples at site or at source of Products to be tested, and to facilitate tests and inspections including storage and curing of test samples.

G. Make arrangements with laboratory through Project Manager. Payment for additional testing will be made in accordance with Document 00700 - General Conditions:

1. Re-testing required for failed tests.

2. Re-testing for nonconforming work.

3. Additional sampling and tests requested beyond specified requirements.

4. Insufficient notification of cancellation of tests for work scheduled but not performed.

PART 2 P R O D U C T S - Not Used

PART 3 E X E C U T I O N

3.01 CONDUCTING TESTING

A Conform to laboratory sampling and testing methods specified in individual Specification sections to the latest issues of ASTM standards, TxDOT methods, or other recognized test standards as approved by Project Manager.

B Requirements of this Section shall also apply to those tests for approval of materials, for mix designs, and for quality control of materials as performed by employed testing laboratories.

END OF SECTION

Section 01502

MOBILIZATION

PART 1 GENERAL

1.01 SECTION INCLUDES

A. Mobilization of construction equipment and facilities onto the site.

1.02 MEASUREMENT AND PAYMENT

A. Unit Price Contracts. If Contract is Unit Price Contract, measurement for mobilization is on a lump sum basis.

B. Stipulated Price (Lump Sum) Contract. If Contract is Stipulated Price Contract, payment for Work in this Section is included in total Stipulated Price.

C. Mobilization payments will be included in monthly payment estimates upon written application by Contractor subject to the following provisions:

1. Authorization for payment of 50 percent of that portion of Contract Price designated for mobilization will be made upon receipt and approval by Project Manager of the following items, as applicable:

   a. Safety Program (Document 00700, Paragraph 10.1.1).

   b. Site Utilization Plan (Section 01145).

   c. Schedule of Values (Section 01292), if any.

   d. Initial Construction Photographs (Section 01321), if needed.

   e. Preliminary Construction Schedule and Billing Forecast (Section 01325).

   f. Construction Schedule (Section 01325 or Section 01326, as applicable).

   g. Submittal Schedule (Section 01330).

   h. Site specific Storm Water Pollution Prevention Plan (SWPPP) and Notice of Intent (NOI) along with storm water application fee (Section 01410), if required.

   i. Contractor's Quality Control Plan (Section 01450), if required.

j. Establishment of a Field Office for Project Manager meeting requirements of Section 01520 - Temporary Field Office.

k. Traffic Control Plan (Section 01555), if required.

l. Plan for Control of Ground and Surface Water (Section 01578), if required.

m. Project Signs Submittal (Section 01580).

n. Trench Safety Program (Section 02260), if required.

o. Dewatering plan, when required.

2. Authorization for payment of the balance of that portion of Contract Price designated for mobilization will be made upon completion of the Work amounting to five percent of Original Contract Price. The amount of Contract Price designated for mobilization may not be applied in computing whether or not five percent of the Original Contract Price has been obtained.

3. Mobilization payments will be subject to retainage amounts stipulated in Document 00700 – General Conditions.

PART 2 P R O D U C T S -Not Used

PART 3 E X E C U T I O N -Not Used

END OF SECTION

Section 01504

TEMPORARY FACILITIES AND CONTROLS

PART 1 G E N E R A L

1.01 SECTION INCLUDES

A. Temporary facilities and necessary controls for the Project, including utilities, telephone, sanitary facilities, storage sheds and building, safety requirements, first aid equipment, fire protection, security measures, protection of the Work and property, access roads and parking, environmental controls, pest and rodent control and disposal of trash, debris and excavated material.

B. Facilities and controls specified in this section are considered minimum for the Project. Provide additional facilities and controls for proper execution of the Work and to meet Contractor's responsibilities for protection of persons and property.

1.02 MEASUREMENT AND PAYMENT

A. UNIT PRICES

1. No separate payment will be made for any temporary facilities and controls required under this section. Include cost of such work in contract price listed for mobilization.

1.03 CONTRACTOR'S RESPONSIBILITY

A. Comply with applicable requirements specified in other sections of Specifications.

1. Maintain and operate temporary facilities and systems to assure continuous service.

2. Modify and extend systems as the Work progress requires.

3. Completely remove temporary materials and equipment when no longer required.

4. Restore existing facilities used for temporary services to specified or original condition.

PART 2 P R O D U C T S - NOT USED

PART 3 EXECUTION

3.01 TEMPORARY UTILITIES

A. Obtaining Temporary Service:

1. Make arrangements with utility service companies for temporary services.

2. Abide by rules and regulations of the utility service companies or authorities having jurisdiction.

3. Be responsible for utility service costs until Date of Substantial Completion. Included are fuel, power, light, heat, and other utility services necessary for execution, completion, testing, and initial operation of work.

B. Water:

1. Provide water required for and in connection with work to be performed and for specified tests of piping, equipment, devices, or for other use as required for proper completion of the Work.

2. Water to be drawn from public fire hydrants. Obtain transit meter from City of Houston, Department of Public Works and Engineering, Taps and Meters Section. Pay required deposit based on rates established by latest ordinance.

3. Provide and maintain an adequate supply of potable water for domestic consumption by Contractor personnel, Project Manager and representatives of the City.

C. Electricity and lighting:

1. Provide electric power service required for the Work including required testing, lighting, operation of equipment, and other Contractor use.

2. Electric power service includes temporary power or generators required to maintain plant operations during scheduled shutdowns.

3. Minimum lighting level shall be 10 foot-candles for open areas; 20-foot-candles for stairs and shops. Provide a minimum of one 300-watt lamp for each 200 square feet of work area.

D. Temporary Heat and Ventilation:

1. Provide temporary heat necessary for protection or completion of the Work.

2. Provide temporary heat and ventilation to assure safe working conditions; maintain enclosed areas at a minimum of 50 degrees F.

E. Telephone:

1. Provide emergency telephone service at Project site for use by Contractor personnel and others performing work or furnishing services at the site.

2. Provide Houston-Metro lines, allowing unlimited calls, without charge in Greater Houston Metropolitan area with "call waiting" and "call forwarding" options. Provide one telephone answering machine with beeperless remote message retrieval capability.

F. Sanitary Facilities:

1. Provide and maintain sanitary facilities for persons on the site; comply with regulations of State and local departments of health.

2. Enforce use of sanitary facilities by construction personnel at site. Enclose sanitary facilities. Pit-type toilets are not permitted. No discharge will be allowed from these facilities. Collect and store sewage and waste so as not to cause nuisance or health problems. Haul sewage and waste off-site and properly dispose in accordance with applicable regulations.

3. Locate toilets near the Work site and secluded from view insofar as possible. Keep toilets clean and supplied throughout the course of the Work.

3.02 STORAGE SHEDS AND BUILDINGS

A. Provide adequately ventilated, watertight storage facilities with floor above ground level for Products susceptible to weather damage.

B. Storage of Products not susceptible to weather damage may be on blocks off the ground.

C. Store Products in a neat and orderly manner. Place Products to permit easy access for identification, inspection and inventory.

D. Fill and grade site for temporary structures to provide drainage away from temporary and existing buildings.

3.03 SAFETY REQUIREMENTS

A. Submit a safety program at the pre-construction meeting and follow the program in accordance with Document 00700 – General Conditions. Include documented response to trench safety requirements of Section 02260 - Trench Safety System.

B. Conduct operations in strict accordance with applicable Federal, State and local safety codes and statutes and with good construction practice. Establish and maintain procedures for safety of all work, personnel and equipment involved in the Work.

C. Observe and comply with Texas Occupational Safety Act (Art. 5182a, V.C.S.) and with all safety and health standards promulgated by Secretary of Labor under Section 107 of Contract Work Hours and Standards Act, published in 29 CFR Part 1926 and adopted by Secretary of Labor as occupational safety and health standards under Williams-Steiger Occupational Safety and Health Act of 1970, and to other legislation enacted for safety and health of Contractor employees. Safety and health standards apply to Subcontractors and Suppliers as well as to the Contractor.

D. Observance of and compliance with safety regulations is Contractor's responsibility without reliance or superintendence of or direction by Project Manager. Immediately advise Project Manager of investigation or inspection by Federal Safety and Health inspectors of Contractor's or Subcontractor's work or place of work on site under the Contract, and after investigation or inspection, advise Project Manager of results. Submit one copy of accident reports to Project Manager within 10 days of occurrence.

E. Protect areas occupied by workmen using the best available devices for detection of lethal and combustible gases. Test devices frequently to assure functional capability. Constantly observe infiltration of liquids into the Work area for visual or odor evidence of contamination, and immediately take appropriate steps to seal off entry of contaminated liquids to the Work area.

F. Implement safety measures, including but not limited to safety personnel, first-aid equipment, ventilating equipment and other safety equipment specified or detailed on Drawings.

G. Maintain required coordination with City Police and Fire Departments during entire period covered by the Contract.

H. Include Project safety analysis in safety plan. Itemize major tasks and potential safety hazards. Plan to eliminate hazards or protect workers and public from each hazard.

3.04 FIRST AID EQUIPMENT

A. Provide a first aid kit throughout the construction period. List telephone numbers for physicians, hospitals, and ambulance services in each first aid kit.

B. Have at least one person thoroughly trained in first aid and CPR procedures present on the site when work is in progress. Contractor to conform to protocols and requirements for training and protection against "blood borne pathogens".

3.05 FIRE PROTECTION

A. Conform to specified fire protection and prevention requirements established by Federal, State, or local governmental agencies and as provided in Safety Program.

3.06 SECURITY MEASURES

A. Protect the Work, materials, equipment, and property from loss, theft, damage, or vandalism. Protect City property used in performance of the Contract.

B. If existing fencing or barriers are breached or removed for purposes of construction, provide and maintain temporary security fencing equal to existing.

3.07 PROTECTION OF UTILITIES AND PIPELINES

A. Prevent damage to existing public utilities during construction. Approximate locations of known utilities are shown on Drawings, but all lines may not be shown. Excavate with caution and repair lines damaged by construction operations.

B. Use the Utility Coordinating Committee One Call System, telephone number, (713) 223-4567, which must be called 48 hours in advance. The toll free telephone number is 1-800-669-8344, Texas One Call System.

C. Before excavating, locate underground utilities by appropriate means including the use of metal detection equipment, and probes, or by excavation or surveys. Repair damage caused by investigative work and by failure to locate or to preserve underground utilities.

D. Give utility owners a minimum five days notice before commencing excavation to allow time to locate utilities and make adjustments or

relocations when they conflict with the Work. Include cost for temporary relocation of water, wastewater, and storm drainage lines, necessary to accommodate construction, in unit prices for utility construction unless otherwise noted. Bypassing of sanitary waste to storm drainage facilities is not allowed.

E. Prior to excavation near pipelines, request a representative of the pipeline company to meet with Contractor and Project Manager at the site to discuss procedures to be used. Request pipeline company's representative to locate the pipelines in at least three locations: at each side and at centerline of proposed excavation of proposed utility. Also request representative and Project Manager to be present to observe Contractor operations when excavation is conducted within 15 feet of pipeline.

F. Utility service lines are not shown on the construction document drawings. Contractor should anticipate that such service lines exit and should exercise extreme caution during construction. The utility service lines should be repaired and restored immediately as per the specification, if damaged due to any construction activities. No separate payment will be made for this repair and restoration work. Include payment in unit price for work in appropriate sections.

G. Prior to abandonment of utility, make appropriate arrangements with City and owner of utility to terminate service, remove meters, tranformers, and poles as may be required by site conditions.

3.08 PROTECTION OF THE WORK AND PROPERTY

A. Preventive Actions

1. Take necessary precautions and actions to prevent damage, injury, or loss to the Work or public and private property, including:

a. Storage of apparatus, supplies, and Products in an orderly, safe manner to limit interference with progress of the Work or work of other contractors, utility service companies, or the City's operations.

b. Suitable storage for Products subject to damage by exposure to weather, theft, breakage, etc.

c. Limitation of loading pressures imposed upon portions of the Work.

d. Frequent clean up of refuse, scrap materials, and debris from construction operations, necessary to maintain the site in a safe and orderly condition.

e. Provision of barricades and guard rails to protect pedestrian and traffic around openings, scaffolding, temporary stairs and ramps, excavations, elevated walkways, and other hazardous areas.

2. Protect public and private property adjacent to the site. Obtain written consent before entering or occupying privately-owned land except on easements provided for construction. Restore property damaged by construction operations to condition equal to or better than that existing before the damage.

B. Barricades and Warning Systems

1. Where work is performed on or adjacent to roadways, rights-of-ways, or public land, provide barricades, fences, lights, warning signs, danger signals, and other precautionary measures necessary for protection of persons or property and for protection of the Work.

a. Erect sufficient barricades to keep vehicles and pedestrians from entering the Work. Paint barricades to be visible at night. From sunset to sunrise, provide at least one light at each barricade.

b. Maintain barricades, signs, lights, and provide watchmen until Project Manager approves removal. Whenever work creates encroachment onto public roadways, station flagmen to manage traffic flow in accordance with approved traffic control plan.

c. Conform to requirements of section 01555 – Traffic Control and regulation.

C. PROTECTION OF EXISTING STRUCTURES

1. Underground Facilities

a. Known Underground Facilities are shown on the Drawings but all Facilities may not be shown. Explore sufficiently ahead of trenching and excavation work to locate Underground Facilities in order to prevent damage to them and to prevent interruption of utility services. Restore damage to Underground Facilities to original condition at no additional cost to the City.

b. If necessary to avoid unanticipated Underground Facilities, Project Manager may make changes in location of the Work.

c. If permanent relocation of an Underground Facility is required

and not provided for in the Contract documents, City Engineer will direct Contractor in writing to perform the Work under Modification provisions in Document 00700 - General Conditions.

2. Surface Structures include buildings, tanks, walls, bridges, roads, dams, channels, open drainage, piping, poles, wires, posts, signs, markers, curbs, walks, guard cables, fencing, and other facilities that are visible above the ground level.

3. Protection of Underground Facilities and Surface Structures:

   a. Support in place and protect Underground Facilities and Surface Structures located within or adjacent to the limits of the Work from damage. Install supports as required by the owner of the structure. Satisfy Project Manager that the owner of the facility or structure has approved methods and procedures before installing structure supports.

   b. Avoid moving or changing public utility or private corporation property without prior written consent of a responsible official of the facility or structure. Allow representatives of utilities to enter the construction site for maintenance and repair purposes or to make necessary changes.

   c. Notify utility and pipeline owners and operators of the nature of construction operations and dates when operations will be performed. When construction operations are required in immediate vicinity of existing structures, pipelines, or utilities, give a minimum of five working days advance notice. Probe and flag location of Underground Facilities prior to commencement of excavation. Keep flags in place until construction operations uncover the facility.

   d. Assume risk for damages and expenses to Underground Facilities and Surface Structures within or adjacent to the Work.

D. Employ a structural engineer to ensure protection measures are adequate for the safety and integrity of structures and facilities.

E. PROTECTION OF INSTALLED PRODUCTS:

1. Provide protection of Installed Products to prevent damage from subsequent operations. Remove protection facilities when no longer needed, prior to completion of the Work.

2. Control traffic to prevent damage to Products and surfaces.

3. Provide coverings to protect Products from damage. Cover projections, wall corners, jambs, sills, and exposed sides of openings in areas used for traffic and passage of materials in subsequent work.

3.09 ROADS AND PARKING

A. Prevent interference with traffic and operations of the City on existing roads.

B. Designate temporary parking areas to accommodate construction and City personnel. When site space is not adequate, provide additional off-site parking. Locate as approved by Project Manager.

C. Minimize use by construction traffic on existing streets and driveways.

D. Do not allow heavy vehicles or construction equipment in existing parking areas.

3.10 ENVIRONMENTAL CONTROLS

A. Use methods, equipment, and temporary construction necessary for control of environmental conditions at the site and adjacent areas.

B. Comply with statutes, regulations, and ordinances relating to prevention of environmental pollution and preservation of natural resources including National Environmental Policy Act of 1969, PL 91-190, Executive Order 11514.

C. Minimize impact to the surrounding environment. Do not use construction procedures that cause unnecessary excavation and filling of terrain, indiscriminate destruction of vegetation, air or stream pollution, or harassment or destruction of wildlife.

D. Limit disturbed areas to boundaries established by the Contract. Do not pollute on-site streams, sewers, wells, or other water sources.

E. Do not burn rubbish, debris or waste materials.

3.11 POLLUTION CONTROL

A. Provide methods, means, and facilities necessary to prevent contamination of soil, water or the atmosphere by discharge of Pollutants from construction operations.

B. Provide equipment and personnel to perform emergency measures to contain spillage, and to remove contaminated soils or liquids. Excavate and dispose of contaminated earth off-site in accordance with laws and regulations, and

replace with suitable compacted fill and topsoil.

C. Provide systems necessary for control of Pollutants.

1. Prevent toxic concentrations of chemicals.

2. Prevent harmful dispersal of Pollutants into the environment.

D. Use equipment that conforms to current Federal, State, and local laws and regulations.

3.12 PEST AND RODENT CONTROL

A. Provide rodent and pest control as necessary to prevent infestation of construction or storage areas.

B. Employ methods and use materials that will not adversely affect conditions at site or on adjoining properties.

3.13 NOISE CONTROL

A. Provide vehicles, equipment, and use construction activities that minimize noise to the greatest degree practicable. Conform to noise levels of Chapter 30 –Noise and Sound Level Regulation, City Code of Ordinances, and latest OSHA standards. Do not permit noise levels to interfere with the Work or create a nuisance to surrounding areas.

B. Conduct construction operations during daylight hours except as approved by Project Manager.

C. Select construction equipment that operates with minimum noise and vibration. When directed by Project Manager, correct objectionable noise or vibration produced by operation of equipment at no additional cost to the City. Sound Power Level (PWL) of equipment shall not exceed 85 dbA (re: 10^{-12} watts) measured five feet from the equipment, or at a lower level if prescribed by City Ordinances. Equipment noise requirements are contained in equipment specifications.

3.14 DUST CONTROL

A. Use water or other methods approved by Project Manager to control amount of dust generated by vehicle and equipment operations.

3.15 WATER RUNOFF AND EROSION CONTROL

A. Comply with requirements of section 01410 – TPDES Requirements.

B. Conduct fill, grading and ditching operations and provide adequate methods necessary to control surface water, runoff, subsurface water, and water from excavations and structures in order to prevent damage to the Work, the site, or adjoining properties.

1. Plan and execute construction and earthwork by methods that control surface drainage from cuts and fills, and from borrow and waste disposal areas.

2. Minimize area of bare soil exposed at one time.

3. Provide temporary control measures, such as berms, dikes, and drains.

4. Provide, operate, and maintain equipment and facilities of adequate size to control surface water.

5. Construct fill and waste areas by selective placement of materials to eliminate erosion of surface silts or clays that may erode.

6. Direct water away from excavations, pits, tunnels, and other construction areas to prevent erosion, sedimentation or damage.

7. Maintain existing drainage patterns adjacent to the site by constructing temporary earth berms, sedimentation basins, retaining areas, and temporary ground cover.

8. Dispose of drainage water in a manner to prevent flooding, erosion, or other damage to the site or adjoining areas, in conformance with environmental requirements.

9. Inspect earthwork periodically to detect any evidence of erosion. Take corrective measures as required to control erosion.

END OF SECTION

Section 01506

DIVERSION PUMPING

PART 1 G E N E R A L

1.01 DEFINITIONS

A. Diversion-pumping: Installation and operation of bulkheads, plugs, hoses, piping, and pumps required to maintain sewer flow and prevent backups and overflows.

1.02 SYSTEM DESCRIPTION

A. Provides continuous sewer service to users of sewer systems while maintenance or construction operations are in progress, by diverting flow around construction locations. Maintain sewer flow to prevent backup or overflow onto streets, yards and unpaved areas or into buildings, adjacent ditches, storm sewers, and waterways. Do not divert sewage outside of sanitary sewer system.

B When pumps are operating, have an experienced operator on site to monitor operation, adjust pumps, make minor repairs to system, and report problems.

1.03 SUBMITTALS

A. Conform to requirements of Section 01330 - Submittals Procedures.

B. For systems that bypass sanitary sewer line segments of 42-inch diameter or larger, submit a Diversion Pumping Plan prior to installation. Show location, number and size of pumps, number, location, size and type of hoses or rigid piping, and location of downstream discharge; and special features where pipes or hoses cross roadways, temporary trenches, support bridges.

1.04 SCHEDULING

A. When the City operates or maintains diversion pumping in construction areas, coordinate construction activities with Project Manager.

B. Cease operation of diversion pumping when approved by Project Manager.

PART 2 PRODUCTS

2.01 MATERIALS

A. Design piping, joints and accessories to withstand at least twice maximum system pressure or 50 psi, whichever is greater.

B. Use self-priming type or submersible electric pumps, with a working pressure gauge on the discharge. Pumps shall meet requirements of City of Houston Noise and Sound Level Regulations.

PART 3 EXECUTION

3.01 FIELD QUALITY CONTROL

A. During diversion pumping, do not allow sewage to leak, dump, or spill into or onto areas outside of existing sanitary sewer systems.

B. In the event of an accidental spill or overflow, immediately stop discharge and take action to clean up and disinfect spill. Promptly notify Project Manager so required reporting can be made to the Texas Commission on Environmental Quality (TCEQ) and the Environmental Protection Agency (EPA).

3.02 CLEANING

A. When diversion-pumping operations are complete, drain sewage within piping into sanitary sewers prior to disassembly.

END OF SECTION

Section 01520

TEMPORARY FIELD OFFICE

PART 1 GENERAL

1.01 SECTION INCLUDES

A Temporary field office building and associated parking area.

1.02 FACILITY DESCRIPTION

A Temporary field office to be utilized by authorized representatives of the City to coordinate and monitor daily construction activities performed by Contractor.

B. Field office shall be a non-smoking facility.

PART 2 PRODUCTS

2.01 FIELD OFFICE

A General:

1. Locate office in vicinity of the Work at a location approved by Project Manager or where indicated on Drawings.

2. Furnish, Install and maintain field office for exclusive use of authorized representatives of the City. Provide sufficient room for Project meetings and Inspector's office.

3. Provide office within 10 days of Date of Commencement of the Work.

4. Construct two all-weather, hard surfaced parking spaces for exclusive use of authorized representatives of the City. Provide all-weather surfaced walk between parking spaces and field office.

B. Minimum Construction:

1 Structurally sound foundation and superstructure.

Weather tight with insulated roof, walls and 7-foot ceiling (minimum).

3. Stairs or walkway with handrail and covered entrance platform (minimum 4 feet by 4 feet) with mud scraper at door.

4. Resilient floor covering.

5. Screened windows with area equal to approximately 10 percent of floor area sufficient for light, view of the site, and ventilation. Provide each window with operable sash and burglar bars.

6. Secure exterior doors with dead-bolt cylinder locks and burglar bars.

C. Minimum Services:

1. Exterior entrance light.

2. Interior lighting of 75 foot-candles minimum at desktop height

3. Automatic heating to maintain 65 degrees F in winter.

4. Automatic cooling to maintain 75 degrees F in summer.

5. Electric power service.

6. Three telephone service lines one for voice, one for data, and one for fax, for exclusive use of authorized representatives of the City.

7. Sanitary facilities in field office with one water closet, one lavatory, and one medicine cabinet for exclusive use of authorized representatives of the City.

D. Minimum Furnishings:

1. One 5-drawer desk

2. Two swivel desk chairs with casters.

3. One plan table.

4. One drawing plan rack.

5. One 4-drawer legal file cabinet complete with fifty legal-size hanging folders and two full-sized carriers.

6. One marker board with cleaner and markers.

7. Two waste baskets.

8. One 30-inch by 36-inch tack board.

9. One all-purpose fire extinguisher.

10. Six protective helmets (hard hats) with ratchet adjustment for exclusive use of authorized representatives of the City.

11. Conference table and chairs to accommodate 10 persons.

12. All in one printer, copier, plain paper fax machine.

13. Telephone instrument separate from fax machine.

E. Provide adequate space for one set of Contract documents for ready reference.

PART 3 EXECUTION

3.01 MAINTENANCE

A Maintain all-weather surface driveway and parking areas, buildings, walkways, stairs and required furnishings and equipment for duration of the Contract.

B. Provide janitorial services for duration of the Contract consisting of twice weekly sweeping and mopping floors, trash removal, weekly restroom cleaning, and weekly dusting of furniture and equipment.

C. Provide soap, paper towels, toilet paper, cleansers and other necessary consumables.

D. Immediately repair damage, leaks or defective service.

3.02 PROJECT CLOSEOUT

A Remove temporary field office and signs and restore site as specified in Section 01770 - Closeout Procedures.

END OF SECTION

Section 01554S

TRAFFIC CONTROL AND STREET SIGNS

The following supplement replaces Section 01554 Traffic Control and Street Signs in its entirety.

PART 1 GENERAL

1.01 SECTION INCLUDES

A. Materials, hardware and installation of Traffic Signs.

1.02 SUBMITTALS

A. Contractor shall submit a list of intended suppliers and products to be used for all signs, posts and associated hardware. City reserves the right to request actual product samples prior to approval.

1.03 UNIT PRICES

A. Payment for installation of traffic signs is on a square foot basis of each sign installed. Cost of associated posts, footings, and miscellaneous mounting hardware will not be paid for directly, but is to be included in the unit price bid for installation of traffic signs.

PART 2 PRODUCTS

2.01 MATERIALS

A. Traffic Signs:

1. Sign Blanks

a. Manufactured of 0.080 inch thick 6061-T6 aluminum.

b. Each sign blank shall be clearly stamped or engraved with the words "CITY OF HOUSTON" in at least two separate locations on the back of the sign blank. Letters shall be at least 0.3 inches in height and penetrate the surface to a depth that makes removal by filing or grinding difficult, but not so deep as to deform the face of the sign.

c. Each finished sign shall have the following sticker affixed to the back in a location where it will be visible when the sign is installed:

CITY OF HOUSTON

VERNON CIVIL STATUTES
ART 6701d / ARTICLE III, SEC. 37
Unlawful to Deface, Remove, Knockdown, or Alter Any Traffic Control Device
MAXIMUM FINE $200.00
Date of Sign Manufacture: 00/04
Sheeting Manufacturer: XYZ, Inc.
Sheeting Lot No.: 12345-678

The sticker shall be Zebra Technologies Z-Ultimate 3000 White or approved equal. Finished product shall be weather and fade resistant for the expected life of the sign.

d. The face of the sign blank shall be prepared and finished to accept sheeting materials in accordance with the sheeting material manufacturer's specifications and current industry standards.

e. Bolt holes shall be drilled or punched prior to the placement of the sheeting.

f. The size and shape of the sign blank shall conform to details shown below.

g. Aluminum shall be of the 3000, 5000 or 6000 series, and have minimum ultimate and yield strength of 3003-H14 alloy. All aluminum alloy utilized in sign blanks furnished shall be produced in accordance with appropriate ASTM production standards.

h. Aluminum sign blanks shall be cut to standard sizes according to specified reference drawings. Blanks should be cleaned, degreased and chemical conversion coated before reflective sheeting is applied.

i. All holes shall be punched with a 3/8" by 1/2" oval punch and die. Edges and holes shall be free of ragged edges or sharp projections. Corner radii shall be uniform and appropriate dimension as specified in reference drawings.

2. Sign Sheeting

All sign blanks shall be covered with appropriate reflective sheeting.

a. Super Engineer Grade Sheeting on Regulatory type signs including but not limited to Parking Restrictions, One Way, Corner Mount Street Name Sign, etc.

b. Hi-Intensity Grade Sheeting on Stop Signs and Warning Signs.

c. Diamond Grade Sheeting on Overhead Street Name Signs.

Sheeting specifications

Sheeting material shall be the following ASTM standards:

1. B-1187 method of salt spray (fog) testing.
2. B-209 specifications for Aluminum and Aluminum Alloy Sheet and Plate
3. D-523 standard method for test for specular gloss
4. E-284 standard definition of terms relating to appearance of materials
5. E-308 computing the colors of objects by using the CIE system
6. E-810 standard test method for coefficient of retro reflection of retro reflective sheeting
7. E-1164 standard practice for obtaining spectrophotometer data for object-color evaluation

3. Poles and Hardware

a. Poles:

Sign poles supplied shall be 14 gauge, circular galvanized steel pipe, 2.375" O.D., of sufficient height so that the bottom of the sign the pole supports will be at least 7 feet above the surrounding ground elevation (which typically indicates a pole length of at 10 feet) and equal to Northwest pipe item 3315. Pole anchor for 2.375" circular sign poles shall be Northwest Pipe item 208 (POZ LOC 27" socket and wedge) or approved equal.

b. Hardware:

All bolts, nuts, washers, brackets, clips, banding matreial, and other related hardware shall be finished so as to inhibit corrosion.

PART 3 EXECUTION

3.01 INSTALLATION

1. Signs shall be attached to round pipes using either bolts that pass through the pipe or U-bolts with die cast-mounting saddles. All nuts shall be self-locking. Flat washers are required under all bolt heads and nuts.

2. Install sign bases using driving caps as recommended by the manufacturer to prevent deformation of the top of the base. Care shall be taken when installing bases to avoid underground utilities, including lawn sprinkler systems.

3. All signs associated with a particular roadway segment that is to receive speed humps shall be installed the same day the roadway is first milled to accept speed humps.

4. Signs shall be protected from damage and weathering prior to installation. Damaged signs, to include dents, scratches, gouges, and scrapes, will not be accepted for payment.

3.02 RESPONSIBILITIES

1. The contractor is responsible for providing and supplying aluminum traffic signs covered with retro-reflective sheeting, applying standard legends (or special legends if shown in the plans) to the covered sign blanks, galvanized steel sign poles, pole anchors, all hardware for installing the signs and poles, and for installing traffic signs, poles and anchors as shown in the plans or called for in the contract documents, complete and ready for field installation.

2. Steve Uren (Steve.Uren@cityofhouston.net, 713.803.3043). The contractor may contact Mr. Uren at the above e-mail address if he/she has questions about materials.

Approved by:

for Harish Jajoo, P.E.
Managing Engineer
Engineering and Construction Division

11-2-09
Date

END OF SECTION

Section 01554

TRAFFIC CONTROL AND STREET SIGNS

PART 1 GENERAL

1.01 SECTION INCLUDES

A. Materials, hardware and installation of Traffic Signs.

1.02 SUBMITTALS

A. Contractor shall submit a list of intended suppliers and products to be used for all signs, posts and associated hardware. City reserves the right to request actual product samples prior to approval.

1.03 UNIT PRICES

A. Payment for installation of traffic signs is on a square foot basis of each sign installed. Cost of associated posts, footings, and miscellaneous mounting hardware will not be paid for directly, but is to be included in the unit price bid for installation of traffic signs.

PART 2 PRODUCTS

2.01 MATERIALS

A. Traffic Signs:

1. Sign Blanks

a. Manufactured of 0.080 inch thick 6061-T6 aluminum.

b. Each sign blank shall be clearly stamped or engraved with the words "CITY OF HOUSTON" in at least two separate locations on the back of the sign blank. Letters shall be at least 0.3 inches in height and penetrate the surface to a depth that makes removal by filing or grinding difficult, but not so deep as to deform the face of the sign.

c. Each finished sign shall have the following sticker affixed to the back in a location where it will be visible when the sign is installed:

CITY OF HOUSTON

VERNON CIVIL STATUTES
ART 6701d / ARTICLE III, SEC. 37
Unlawful to Deface, Remove, Knockdown, or Alter Any Traffic Control Device
MAXIMUM FINE $200.00
Date of Sign Manufacture: 00/04
Sheeting Manufacturer: XYZ, Inc.
Sheeting Lot No.: 12345-678

The sticker shall be Zebra Technologies Z-Ultimate 3000 White or approved equal. Finished product shall be weather and fade resistant for the expected life of the sign.

d. The face of the sign blank shall be prepared and finished to accept sheeting materials in accordance with the sheeting material manufacturer's specifications and current industry standards.

e. Bolt holes shall be drilled or punched prior to the placement of the sheeting.

f. The size and shape of the sign blank shall conform to details shown below.

g. Aluminum shall be of the 3000, 5000 or 6000 series, and have minimum ultimate and yield strength of 3003-H14 alloy. All aluminum alloy utilized in sign blanks furnished shall be produced in accordance with appropriate ASTM production standards.

h. Aluminum sign blanks shall be cut to standard sizes according to specified reference drawings. Blanks should be cleaned, degreased and chemical conversion coated before reflective sheeting is applied.

i. All holes shall be punched with a 3/8" by 1/2" oval punch and die. Edges and holes shall be free of ragged edges or sharp projections. Corner radii shall be uniform and appropriate dimension as specified in reference drawings.

2. Sign Sheeting (Provided by City)

All sign blanks shall be covered with appropriate reflective sheeting.

a. Super Engineer Grade Sheeting on Regulatory type signs including but not limited to Parking Restrictions, One Way, Corner Mount Street Name Sign, etc.

b. Hi-Intensity Grade Sheeting on Stop Signs and Warning Signs.

c. Diamond Grade Sheeting on Overhead Street Name Signs.

Sheeting specifications

Sheeting material shall be the following ASTM standards:

1. B-1187 method of salt spray (fog) testing.
2. B-209 specifications for Aluminum and Aluminum Alloy Sheet and Plate
3. D-523 standard method for test for specular gloss
4. E-284 standard definition of terms relating to appearance of materials
5. E-308 computing the colors of objects by using the CIE system
6. E-810 standard test method for coefficient of retro reflection of retro reflective sheeting
7. E-1164 standard practice for obtaining spectrophotometer data for object-color evaluation

3. Poles and Hardware

a. Poles:

Sign poles supplied shall be 14 gauge, circular galvanized steel pipe, 2.375" O.D., of sufficient height so that the bottom of the sign the pole supports will be at least 7 feet above the surrounding ground elevation (which typically indicates a pole length of at 10 feet) and equal to Northwest pipe item 3315. Pole anchor for 2.375" circular sign poles shall be Northwest Pipe item 208 (POZ LOC 27" socket and wedge) or approved equal.

b. Hardware:

All bolts, nuts, washers, brackets, clips, banding matreial, and other related hardware shall be finished so as to ingibit corrosion.

PART 3 EXECUTION

3.01 INSTALLATION

1. Signs shall be attached to round pipes using either bolts that pass through the pipe or U-bolts with die cast-mounting saddles. All nuts shall be self-locking. Flat washers are required under all bolt heads and nuts.

2. Install sign bases using driving caps as recommended by the manufacturer to prevent deformation of the top of the base. Care shall be taken when installing bases to avoid underground utilities, including lawn sprinkler systems.

3. All signs associated with a particular roadway segment that is to receive speed humps shall be installed the same day the roadway is first milled to accept speed humps.

4. Signs shall be protected from damage and weathering prior to installation. Damaged signs, to include dents, scratches, gouges, and scrapes, will not be accepted for payment.

3.02 RESPONSIBILITIES

1. The contractor is responsible for providing aluminum traffic sign blanks covered with retro-reflective sheeting as indicated below, galvanized steel sign poles, pole anchors, all hardware for installing the signs and poles, for delivering the covered sign blanks for sign fabrication by the City, for picking up the completed signs and for installing traffic signs, poles and anchors as shown in the plans or called for in the contract documents. The City's traffic sign fabrication shop will apply standard legends (or special legends if shown in the plans) to the covered sign blanks provided by the contractor.

2. No less than 60 days before the contractor is ready to install the permanent signing, he shall deliver the correct number of sign blanks covered with reflective sheeting (as described below) to the City's sign fabrication shop at 2200 Patterson Street, Houston, Texas 77007 after first giving a minimum of 3 days notice to Sidney So (Sidney.So@cityofhouston.net, 713.803.3054) and to Steve Oren (Steve.Uren@cityofhouston.net, 713.803.3043) of when the sign blanks will be delivered. Signs shall be securely stacked on wooden palates and secured with plastic strapping of wrapped with plastic shrink-wrap sheeting, with no more than 250 blanks per pallet. The City will notify the indicated individual when the signs are ready to be picked up and installed. The signs must be picked up and either installed or safely stored within 3 (three) days after being notified. The contractor may contact Mr. Uren at the above e-mail address if he/she has questions about materials.

END OF SECTION

Section 01555

TRAFFIC CONTROL AND REGULATION

PART 1 GENERAL

1.01 SECTION INCLUDES

A. Requirements for signs, signals, control devices, traffic barriers, flares, lights and traffic signals; construction parking control, designated haul routes, and bridging of trenches and excavations.

B. Qualifications and requirements for use of flagmen.

1.02 MEASUREMENT AND PAYMENT

A. Unit Price Contracts.

1. Traffic control and regulation. Payment for traffic control and regulation is on a lump sum basis. Include preparation and submittal of traffic control plan if different than shown on Drawings, and provision of traffic control devices, equipment, and personnel necessary to protect the Work and public. Payment will be based on Contractor's Schedule of Values for traffic control and regulation.

2. Payment for traffic control will be authorized by Project Manager in three (3) parts. Partial payment will be made according to following schedule:

   a. Payment of 25 percent of traffic control amount will be authorized when permanent control devices and necessary temporary markings, sufficiently deployed along job site as required to maintain progress of work, are installed at job site and approved. This limiting percentage will be prorated based upon extent of Contractor's setup.

   b. A payment of 50 percent of traffic control amount will be authorized when pavement replacement commences. This limiting percentage will be prorated based upon linear footage, as measured along centerline axis of water main, of pavement replaced.

   c. A payment of 25 percent of traffic control amount will be authorized when permanent pavement markings are restored and all unnecessary permanent and temporary control devices removed. This limiting percentage will be prorated based upon the extent of restoration.

3. Flagmen: Measurement is on a lump sum basis for flagmen as required for the project. The amount invoiced shall be determined based on the schedule of value submitted for flagmen.

4. New Portable Concrete Low Profile Traffic Barrier Provided. Payment is on a unit price basis for each linear foot of low profile traffic barrier provided, installed with hardware assemblies and connected together in accordance with the approved traffic control plan.

5. Portable Concrete Low Profile Traffic Barrier picked up from City of Houston Stockpile. Payment is on a unit price basis for each linear foot of low profile traffic barrier picked up from designated stockpile, moved onto the project, set at location and connected together.

6. Portable Concrete Low Profile Traffic Barrier Installed. Payment is on a unit price basis for each linear foot of low profile traffic barrier delivered to the project location, installed with hardware assemblies and connected together in accordance with the approved traffic control plan.

7. Portable Concrete Low Profile Traffic Barrier Moved and Reset. Payment is on a unit price basis for each linear foot of low profile traffic barrier disassembled, moved on the project, reset at the new locations and connected together. Include cost to repair roadway in the unit price.

8. Portable Concrete Low Profile Traffic Barrier Removed. Payment is on a unit price basis for each linear foot of low profile traffic barrier removed from the project, including hardware assemblies, and stockpiling at location listed in Section 01110 – Summary of Work. Include cost to repair roadway in the unit price.

9. Refer to Section 01270 - Measurement and Payment for unit price procedures.

B. Stipulated Price Contracts. Include payment for work under this section in the total Stipulated Price.

1.03 REFERENCES

A. Texas Manual on Uniform Traffic Control Devices (TMUTCD)

B. Article 4413 (29bb), commonly referred to as Private Investigators and Private Security Agencies Act, and Article 2.12, Texas Code of Criminal Procedure.

C. Code of Ordinances, City of Houston, Texas.

1. Chapter 10 Buildings And Neighborhood Protection, Article X Cleanup After Demolition Or Removal Of Structures

2. Chapter 40 Streets and Sidewalks, Article XVII Pedestrian Way Impairments

1.04 SUBMITTALS

A. Conform to requirements of Section 01330 - Submittal Procedures.

B. Traffic control plan:

1. If using traffic control plan contained in the Contract without modification, submit a letter confirming use of the plan.

2. If using a different traffic control plan, submit the plan for approval. The plan must conform to TMUTCD requirements and be sealed by a Registered Texas Professional Engineer.

C. Submit copies of approved lane closure permits issued by City Traffic Engineering Branch.

D. Submit Schedules of Values for traffic control plan and flagmen within 30 days following Notice to Proceed.

E. Submit records verifying qualifications of Uniformed Peace Officers and Certified Flagmen proposed for use on the Work.

F. When working in the central business district, submit copies of approved Pedestrian Way permits issued by the City's Traffic Engineering Branch.

1.05 FLAGMEN

A. Use Uniformed Peace Officers and Certified Flagmen to control movement of vehicular and pedestrian traffic when construction operations encroach on public traffic lanes. Unless otherwise approved by Project Manager, use Uniformed Peace Officer for work along major thoroughfares, schools, churches, hospitals and Work at signalized intersections.

B. Uniformed Peace Officer: Individual employed full-time as a peace officer who receives separate compensation as a privately employed flagman. Private employment may be an employee-employer relationship or on an individual basis. Flagman may not be in the employ of another peace officer nor be a reserve peace officer.

1. Uniformed Peace Officers may be:

   a. sheriffs and their deputies;

   b. constables and deputy constables;

   c. marshals or police officers of an incorporated city, town or village; or

   d. as otherwise provided by Article 2.12, Code of Criminal Procedure.

2. The Uniformed Peace Officer must be a full-time peace officer, must work a minimum average of 32 paid hours per week, and must be paid a rate not less than the prevailing minimum hourly wage rate set by the federal Wage and Hour Act. The individual must be entitled to vacation, holidays, and insurance and retirement benefits.

C. Certified Flagman: Individual who receives compensation as a flagman and meets the following qualifications:

1. Formally trained and certified in traffic control procedures by the City s E. B. Cape Center.

2. Speaks English. Ability to speak Spanish is desirable but not required.

3. Paid for flagman duty at an hourly rate not less than the wage rate set for Rough Carpenter under the City's Wage Scale for Engineering Construction.

D. Certified Flagmen must wear a distinctive uniform, bright-colored vest, and be equipped with appropriate flagging and communication devices while at the Work site. They must also have in their possession while on duty, a proof of training identification card issued by the appropriate training institute.

PART 2 P R O D U C T S

2.01 SIGNS, SIGNALS, AND DEVICES

A. Comply with TMUTCD requirements.

B. Traffic cones and drums, flares and lights: Conform to local jurisdictions' requirements.

C. When working in the Central business district, provide pedestrian pathway

signage approved by the City's Traffic Engineering Branch.

2.02 PORTABLE LOW PROFILE CONCRETE BARRIERS

A. The low profile concrete barrier is a patented design. Information concerning this barrier may be obtained from Texas Transportation Institute, Texas A&M University System, College Station, Texas 77843-3135, (409) 845-1712.

PART 3 E X E C U T I O N

3.01 PUBLIC ROADS

A. Submit requests forms for lane closure and sidewalk closure to the City's Traffic Engineering Branch at least three working days prior to need for blocking vehicular lanes or sidewalks. Do not block lanes or sidewalks without approved permits. Obtain application from the City's Traffic Engineering Branch at 611 Walker, 5th floor or at the following internet address: http://www.ci.houston.tx.us/pwe/mrow/laneclosure.htm.

B. Follow laws and regulations of governing jurisdictions when using public roads. Pay for and obtain permits from jurisdiction before impeding traffic or closing lanes. Coordinate activities with Project Manager.

C. Give Project Manager one-week notice before implementing approved traffic control phases. Inform local businesses of impending traffic control activities.

D. Notified police department, fire department, METRO, and local schools, churches, and businesses in writing a minimum of five business days prior to beginning work.

E. Maintain 10-foot wide all-weather lanes adjacent to the Work for emergency vehicle use. Keep all-weather lanes free of construction equipment and debris.

F. Do not to obstruct normal flow of traffic from 7:00 a.m. to 9:00 a.m. and 4:00 p.m. to 6:00 p.m. on designated major arterials or as directed by Project Manager.

G. Maintain local driveway access to residential and commercial properties adjacent to work areas at all times. Use all-weather materials approved by Project Manager to maintain temporary driveway access to commercial and residential driveways.

H. Keep streets entering and leaving job site free of excavated material, debris, and foreign material resulting from construction operations in compliance with

applicable ordinances.

I. Remove existing signage and striping that conflict with construction activities or that may cause driver confusion.

J. Provide safe access for pedestrians along major cross streets.

K. Alternate closures of cross streets so that two adjacent cross streets are not closed simultaneously.

L. Do not close more than two consecutive esplanade openings at a time without prior approval from Project Manager.

3.02 CONSTRUCTION PARKING CONTROL

A. Control vehicular parking to prevent interference with public traffic and parking, access by emergency vehicles, and the City's operations.

B. Monitor parking of construction personnel's vehicles in existing facilities. Maintain vehicular access to and through parking areas.

C. Prevent parking on or adjacent to access roads or in non-designated areas.

3.03 FLARES AND LIGHTS

A. Provide flares and lights during hours of low visibility to delineate traffic lanes and to guide traffic.

3.04 HAUL ROUTS

A. Utilize haul routes designated by authorities or shown on drawings for construction traffic.

B. Confine construction traffic to designated haul routes.

C. Provide traffic control at critical areas of haul routes to regulate traffic and minimize interference with public traffic.

3.05 TRAFFIC SIGNS AND SIGNALS

A. Construct necessary traffic control devices for temporary signals required to complete the Work including loop detectors, traffic signal conduits, traffic signal wiring and crosswalk signals. Notify the City's Traffic Engineering Branch a minimum of 60 days in advance of need for control boxes and switchgear. The City will perform necessary service, programming or adjustments, to signal boxes and switchgear if required during construction.

B. Install and operate traffic control signals to direct and maintain orderly traffic flow in areas under Contractor's control affected by Contractor's operations. Post notices, signs and traffic controls before moving into next phase of traffic control.

C. Relocate traffic signs and signals as the Work progresses to maintain effective traffic control.

D. Unless otherwise approved by Project Manager, provide driveway signs with name of business that can be accessed from each crossover. Use two signs for each crossover.

E. Replace existing traffic control devices in Project area.

F. Project Manager may direct Contractor to make minor adjustments to traffic control signage to eliminate driver confusion and maintain orderly traffic flow during construction at no additional cost to the City.

3.06 BRIDGING TRENCHES AND EXCAVATIONS

A. When necessary, construct bridges over trenches and excavation to permit an unobstructed flow of traffic across construction areas and major drives. Use steel plates of sufficient thickness to support H-20 loading and install to operate with minimum noise.

B. Shore trench or excavation to support bridge and traffic.

C. Secure bridging against displacement with adjustable cleats, angles, bolts or other devices when:

1. bridging is placed over existing bus routes,

2. more than five percent of daily traffic is comprised of commercial or truck traffic,

3. more than two separate plates are used for bridging, and

4. when bridge is to be used for more than five consecutive days.

D. Extend steel plates used for bridging a minimum of 1 foot beyond edges of trench or excavation. Use temporary paving materials such as premix to feather edges of plates to minimize wheel impact on secured bridging.

3.07 REMOVAL

A. Remove equipment and devices when no longer required.

B. Repair damage caused by installation.

C. Remove post settings to a depth of 2 feet.

3.08 TRAFFIC CONTROL, REGULATION AND DIRECTION

A. Use Flagmen to control, regulate and direct an even flow and movement of vehicular and pedestrian traffic, for periods of time as may be required to provide for public safety and convenience, where:

1. multi-lane vehicular traffic must be diverted into single lane vehicular traffic,

2. vehicular traffic must change lanes abruptly,

3. construction equipment must enter or cross vehicular traffic lanes and walks,

4. construction equipment may intermittently encroach on vehicular traffic lanes and unprotected walks and crosswalk,

5. traffic regulation is needed due to rerouting of vehicular traffic around the Work site, and

6. where construction activities might affect public safety and convenience.

B. Use of Flagmen to assist in the regulation of traffic flow and movement does not relieve Contractor of responsibility to take other means necessary to protect the Work and public.

3.09 INSTALLATION STANDARDS

A. Place temporary pavement for single lane closures, in accordance with TMUTCD.

B. Reinstall temporary and permanent pavement markings as approved by Project Manager. When weather conditions do not allow application according to manufacturer's requirements, alternate markings may be considered. Submit proposed alternate to Project Manager for approval prior to installation. No additional payment will be made for use of alternate markings.

3.10 MAINTENANCE OF EQUIPMENT AND MATERIAL

A. Submit name, address and telephone number of individual designated to be

responsible for maintenance of traffic handling at construction site to Project Manager. Individual must be accessible at all times to immediately correct deficiencies in equipment and materials used to handle traffic including missing, damaged, or obscured signs, drums, barricades, or pavement markings.

B. Inspect signs, barricades, drums, lamps and temporary pavement markings daily to verify that they are visible, in good working order, and conform with traffic handling plans as approved by Project Manager. Immediately repair, clean, relocate, realign, or replace equipment or materials that are not in compliance.

C. Keep equipment and materials, signs and pavement markings, clean and free of dust, dirt, grime, oil, mud, or debris.

D. Obtain approval of Project Manager to reuse damaged or vandalized signs, drums, and barricades.

END OF SECTION

Section 01562

TREE AND PLANT PROTECTION

PART 1 GENERAL

1.01 SECTION INCLUDES

A. Tree and plant protection.

B. Minimum qualifications of Arborist and Urban Forester.

1.02 MEASUREMENT AND PAYMENT

A. Payment for Tree Protection, including tree pruning or tree removal, shall be paid as a Lump Sum basis that shall include all items specified in this section unless payment is specified otherwise in this section

B Payment for Zero Curb Cutback will be on a per linear foot basis.

C. Payment for Checker Plate will be on a square foot basis.

D. Refer to Section 01270-Measurement and Payment for unit price procedures.

1.03 SUBMITTALS

A. Conform to requirements of Section 01330 – Submittal Procedures.

B. Submit name and experience of qualified Arborist, proposed for use on the Work, to Project Manager.

1.04 PROJECT CONDITIONS

A. Preserve and protect existing trees and plants to remain from foliage, branch, trunk, or root damage that could result from construction operations.

B. Prevent following types of damage:

1. Compaction of root zone by foot or vehicular traffic, or material storage.

2. Trunk damage from equipment operations, material storage, or from nailing or bolting.

3. Trunk and branch damage caused by ropes or guy wires.

4. Root or soil contamination from spilled solvents, gasoline, paint, lime slurry, and other noxious materials.

5. Branch damage due to improper pruning or trimming.

6. Damage from lack of water due to:

   a. Cutting or altering natural water migration patterns near root zones.

   b. Failure to provide adequate watering

7. Damage from alteration of soil pH factor caused by depositing lime, concrete, plaster, or other base materials near roots zones.

8. Cutting of roots larger than one inch in diameter.

1.05 DAMAGE ASSESSMENT

A. When trees other than those designated for removal are destroyed or damaged as result of construction operations, remove and replace with same size, species, and variety up to and including 8 inches in trunk diameter. Trees larger than 8 inches in diameter shall be replaced with an 8 inch diameter tree of the same species and variety and total contract amount will be reduced by an amount determined from the following formula and paid to Tree Fund 0.7854 x D2 x $13.25 where D is diameter in inches of tree or shrub trunk measured 12 inches above grade for that portion of the tree which is greater than 8 inches in diameter. A permit must be applied for and approved by the City of Houston, Urban Forestry Division prior to removal of any tree not scheduled for removal in the tree treatment schedule. Contractor shall contact City of Houston, Urban Forestry, at 832-395-8459 to apply for tree removal permit when needed.

PART 2 PRODUCTS

2.01 MATERIALS

A. Pruning Paint: Black latex, water based paint, free of all petroleum products.

B. Fertilizer: Fertilizer shall be a root stimulant that contains at a minimum the following ingredients: Ectomycorrhizal Fungi, VA Mycorrhizal (VAM) Fungi, Rhizosphere Bacillus spp., Kelp Meal Humic Acid, and Soluble Yucca.

C. Tree Protection Fencing: Orange, plastic mesh fenching, 4 feet in height with 6 feet high "t" bar posts installed 10 feet on centers as per drawings.

D. Plastic Root/Soil Protection: Clear polyethylene sheeting, minimum 6 mil, thickness.

PART 3 EXECUTION

3.01 PROTECTION OF EXISTING TREES AND SHRUBS

A. Site preparation work and/or construction work shall not begin in any area where tree preservation measures have not been completed and approved.

B. Protect exposed roots and root zone areas from contamination from stabilization materials and concrete using polyethylene.

C. Cover exposed roots within 4 hours to reduce damage caused by desiccation. Roots may be covered with soil, mulch, polyethylene, or wet burlap to help protect them from drying.

D. Designate limited areas as concrete washout areas. Locate concrete washout areas away from root zones.

E. Install root pruning trenching where designated in tree treatment schedule and shown on the tree protection drawings. Trees scheduled for root pruning are called out specifically in the treatment schedule. Trench shall be located 2 ft. from the edge of proposed waterline or sanitary sewer for trees called out for root pruning for water or fittings, or sanitary sewer in the treatment schedule, 2 ft. from edge of proposed storm sewer pipe for trees called out for root pruning for storm in the treatment schedule, 30" back of proposed curb for trees called out for root pruning for street, and at edge of sidewalk for trees called out for root pruning for sidewalk. Root pruning shall not be performed where there is not adequate space to be located sufficiently away from tree to prevent damage. All pruning must be evaluated by Contractor's Certified Arborist and reviewed and approved by City Forester before being performed. Trench locations shown on tree preservation plan are drawn to scale and should be located in field as drawn on plan. Exact locations shall be approved in the field by engineer and/or project urban forester prior to installation. Trenching depth shall be a minimum of 2 ft. deep and a maximum of 6 inches wide for water, fittings, sanitary sewer, storm, and street. Trenching depth shall be to the anticipated bottom of sidewalk and base material for sidewalk root pruning, roots lower than sidewalk shall not be pruned. All roots shall be cut by trencher, chainsaw, or handsaw to the specified depth. Roots shall be cut cleanly, and or not ripped, torn, or chopped. Trench shall be backfilled and compacted immediately after trenching. Trench shall be installed prior to any clearing and grubbing, excavation for underground, or any other site work.

F. Install tree protection fencing around each tree to be preserved as indicated in the tree treatment schedule and on the tree protection plan.

1. Each tree to be preserved shall be protected with a tree protection fence. The fencing shall be continuous between posts, shall be pulled taut prior to securing to posts, and shall be firmly attached to the posts with a minimum of 4 wire ties.

2. All tree protection fencing shall be installed prior to site work or construction activity. The fence shall be placed in a continuous alignment as shown on the tree protection plan. Fences shown on tree protection plan are drawn to scale and shall be installed as drawn, in the field. In general fences shall be placed 30" back of existing curb or edge of pavement where root pruning or zero curb cutback is not specified, and 6" back of root pruning trench where root pruning is specified and immediately back of curb where zero curb cutback is specified. Exact locations shall be approved by the project urban forester and/or engineer in the field. The Fences shall be placed to protect roots, trunks, and foliage. The contractor shall not remove or relocate tree protection fencing and shall not operate within the limits shown without direct approval of the project urban forester. In areas where the proposed waterline is located in the existing road side ditch and where tree protection fencing can not be installed across the ditch, the fencing shall be installed at the top of outside ditch bank and no bore pits, peep holes, service taps, or any excavation should occur in the area immediately in front of the tree protection fencing for trees called out with "bore" in the Tree Treatment Schedule. The "bore" limits shall be the same as the limits of the tree protection fencing.

3. Storage of equipment or materials will not be allowed inside a fence. Entryways and access into a protected area shall not be provided unless approved by the project urban forester.

4. Damage to tree fences occurring during the progress of the work shall be repaired immediately at no additional cost to owner. Workmen shall be clearly instructed to exercise caution in performance of work near trees being preserved.

5. Tree protection fencing shall be removed by contractor, at no additional costs, upon completion of all construction activity in each work zone area. Tree protection fencing materials used in the first two work zone areas shall be removed and utilized in subsequent work zone areas. Materials and labor shall be paid for each linear foot of fencing installed in first two work areas. All fencing installed in subsequent work zone areas shall be paid for labor only.

G. Boring/Auguring of water lines or sanitary sewer lines

1. Water line or sanitary sewer line shall be bored/augured/ horizontally drilled under

critical root zones areas of trees designated with auger or bore in the tree treatment schedule. The entire area protected with tree protection fencing shall be bored. No bore pits, come through holes, peep holes, push pits, or long or short side service taps shall be allowed in the areas protected by tree protection fencing. The tree protection plan takes into consideration the limits of augering equipment, there should be room for adequately spaced bore pits, peep holes, come through holes, and push pits. Any changes to the location of the tree protection fencing shall be authorized by the project Urban Forester and City Engineer.

H. Hand digging of Service taps and leads

1. Trees called out for Hand dig short side service tap are located in very close proximity to existing short side water meters. Excavating the service tap with machinery would significantly impact the tree and be in violation of the City of Houston's Street Tree Ordinance. These short side service taps shall be excavated with manual labor to expose any roots 1" in diameter and larger. The first 24" of excavation shall be completed manually to expose the roots. Any root 1" in diameter and larger shall remain undamaged, the roots shall not be cut , nor shall the bark and cambium layer be scraped or damaged. Once the roots are exposed, if there is adequate room to utilize a mini-excavator without damaging the roots, the mini-excavator can be utilized to complete the excavation down to the water line. 1" plywood shall be placed on grade to provide root protection in the area of access of the mini-excavator. If roots 1" diameter or larger are cut or damaged, responsible party will be subject to a citation under the Street Tree Ordinance, and may also be required to incur the cost of tree removal and replacement of damaged tree on an inch for inch basis, if required by City of Houston Urban Forestry Division.

2. Trees called out for Hand dig short side or long side service lead are located in very close proximity to existing water meters. Excavating the service lead with machinery would significantly impact the tree and be in violation of the City of Houston's Street Tree Ordinance. Short side leads shall be excavated with manual labor to expose any roots 1" in diameter and larger from the service tap of the meter. Come out hole and excavation required for long service leads shall be excavated with manual labor to expose roots 1" in diameter and larger, from the come out hole to the meter. In each case, all roots 1" in diameter and larger shall remain undamaged, the roots shall not be cut, nor shall the bark and cambium layer be scraped or damaged. If roots 1" diameter or larger are cut or damaged, responsible party will be subject to a citation under the cost of tree removal and replacement of damaged tree on an inch by inch basis, if required by City of Houston Urban Forestry Division.

3. Trees called out for Hand dig sanitary stub up are located in very close proximity to proposed service lead. Excavating the service lead with machinery would significantly impact the tree and be in violation of the City of Houston's Street Tree

Ordinance. Excavation for sanitary stub up shall be completed with manual labor to expose any roots 1" in diameter and larger. The lead shall be bored from face of curb to stub up hole when called out in the tree treatment schedule. Come out and stub up holes shall be excavated with manual labor to expose roots 1" in diameter and larger. In case, all roots 1" in diameter and larger shall remain undamaged, the roots shall not be cut, nor shall the bark and cambium layer be scraped or damaged. If roots 1" diameter or larger are cut or damaged, responsible party will be subject to a citation under the Street Tree Ordinance, and may be required to incur the cost of tree removal and replacement of damaged tree on an inch by inch basis, if required by City of Houston Urban Forestry Division.

4. Long side service taps shall not be located in an area specified to be bored in the tree treatment schedule. Should it be absolutely necessary to locate a long side service tap in an area specified to be bored, the excavation shall be completed as specified in paragraph 1 of this section-Hand digging short side service taps.
5. All water meters and sanitary service leads called out on P&P drawings and visible in the field have been addressed in the Tree Protection Plan. Should any additional meters or lead be found during construction, or in any new meters or leads installed beneath the canopy of any tree, fenced for tree protection, the excavation shall be completed as specified in paragraph 1 and/or 2 of this section and paid for at the unit cost for each included in contract.

I. Pruning of Trees

1. Trees shall be pruned in accordance with the American National Standard for tree pruning, ANSI A300 (Part 1) – 2001 Pruning Revision of ANSI A300-1995 Tree, Shrub and Other Woody Plant Maintenance – Standard Practices. Pruning shall be completed by professional arborists who has received training in proper pruning techniques.

2. Clearance prune designated trees for public streets, sidewalks, and construction areas. Provide minimum 14 feet and maximum of 18 feet of vertical clearance over proposed water trunk lines. Provide minimum of 14 feet and maximum of 16 feet of vertical clearance over proposed street construction, from 24" back of curb on one side to 24" back of curb on the other side. Provide 20' of vertical clearance over proposed storm sewer up to 38" in size, and 30' of vertical clearance for storm sewer larger than 38" in size. Pruning to be installed prior to any construction activity. Contractor shall notify property owner prior to trimming or pruning any trees with trunks located on private property. Exceptions will be made for trees determined to be arboriculturally significant by City of Houston Urban Forestry. Pruning of trees identified will be completed with approval and supervision of City of Houston Urban Forestry.

3. All cuts should be made sufficiently close to the parent limb or trunk without cutting into the branch collar or leaving a protruding stub, so that closure can readily start under normal conditions. All lateral cuts shall be made to a lateral that is least 1/3 the diameter of the parent limb. Clean cuts shall be made at all times.

4. Trees shall be pruned in a manner that will not destroy or alter the natural shape and character of the tree. Apply black latex paint to all fresh wounds on Oak (Quercus) species immediately after each cut is made.

5. Crown cleaning prune designated trees shall include selective removal of dead, diseased, and/or broken limbs.

J. Tree Removal

1. Trees scheduled for removal shall be sawed down and debris hauled from the site the same day. The stump shall be ground to 6" below grade and excess grindings shall be hauled from the site the same day, so that a pile of grindings is not left where the stump was ground. Enough grindings should be left so that an open hole does not remain.

2. Only those trees called out for removal in the Tree Treatment Schedule shall be removed, or otherwise damaged. Should it be determined that any additional trees must be removed, a permit must be applied for and approved from the City of Houston Urban Forestry Division prior to removal. Contractor shall contact Urban Forestry at 832-395-8459.

K. Root Stimulation

1. Deep root stimulate designated trees. Mix fertilizer with wetting agent per label instructions.

2. Stimulate entire root zone area within the dripline of the tree and continue 10 feet beyond the dripline, leaving out areas of anticipated root loss (construction areas).

3. Mixture shall be injected into the top 10 inches of soil under pressure of 150 to 200 psi as soil conditions warrant.

4. Mix in a tank with agitation capability per label instructions. Inject the mixture on a 2.5 ft. square grid at 4 lbs, actual nitrogen per 1,000 sq. ft.

L. Regularly water trees which have received root damage, to eliminate additional stress caused by lack of moisture. Water during periods without adequate rainfall. For example, should 1.0" of rain not be received within a week period, the trees should be thoroughly watered.

March through September, water once every two weeks. October through February, water every three weeks. Water thoroughly to saturate the entire root zone area.

M. Chemically treat tree trunks with evidence of borer activity with the appropriate approved insecticide mixed and applied per the manufacturer's product application recommendations. Trees shall be sprayed within 24 hours after observance of borer activity.

N. Grading and filling around trees.

1. Maintain existing grade within the dripline of trees, unless otherwise indicated.

2. Where existing grade around trees is above new finish grade, under supervision of project urban forester, carefully hand excavate within the dripline to make transition to new finish grade.

3. Where existing grade is below new finish grade, place clean bank sand in a single layer to make the transition to new grade. Do not compact; hand grade to required elevation. Specifically to areas where proposed curb is higher than existing and backfill will be required.

O. Demolition, Forming and Pouring Sidewalks (Sidewalk on Grade)

1. Demolition of existing sidewalks, located in or adjacent to the limits of tree protection fencing, shall be completed without disturbing, cutting, or otherwise damaging tree roots and soil located beneath them.

2. The new sidewalk shall be formed at or above the elevation of the existing sidewalk, without disturbing, cutting or otherwise damaging tree roots. Every effort has been made to address tree root and sidewalk elevation issues with information available in the field and on plan and profile sheets. The elevation of every tree root was not available, if tree roots are found to be in conflict with proposed sidewalk, project engineer and urban forester shall be consulted as to how to install sidewalks with minimal impacts to adjacent trees.

3. Checkerplate shall be installed in areas called out only if tree root elevations prohibit construction of ADA compliant sloped concrete sidewalks. Checkerplate shall be installed per detail.

P. Zero curb cutback

1. Disturbance of tree roots or soil behind the existing and/or proposed curb within root zones of trees designated for zero curb cutback shall be prohibited. If the curb can not be removed without disturbing soil or damaging roots back of curb when using

equipment for demolition, the curb shall be broken using a hand held jackhammer and removed by hand.

2. The exposed roots and soil shall be covered immediately after demolition with 6 mil polyethylene in order to avoid desiccation, and contamination by the lime used for road bed stabilization. The polyethylene shall be placed so that it covers the vertical face of soil back of curb and laid back onto the grade 12 inches back of curb. The polyethylene should remain in place, across the entire area specified for zero curb cutback, from the time the existing curb is demolished until the time when the new curb is formed and backfilled. The polyethylene can be pulled up from the vertical face while the road bed is being graded or mixed, to avoid catching the plastic with machinery, but shall be replaced immediately after equipment has completed. The vertical face shall not be exposed for more than 8 hours in any 24 hour period.

3. There shall be no stabilization back of curb in the zero curb cutback areas, or forming with steel forms. The existing grade and roots back of existing curb shall not be disturbed. This may require forming of the new street with wooden forms with stakes inside forms, which may require leaving the forms in place after the street is poured. Should wooden forms be utilized, the wood shall be at minimum a 2x6. The new curb may require hand finishing, as a slip curb machine may not have adequate clearance without disturbing the roots that are to be protected with the zero curb cutback.

4. Roots extending into the street, or on top of the existing curb, in areas to paved shall be cut and removed by hand prior to disturbance or removal with equipment. Roots shall be pruned flush with the proposed back of curb. Roots one inch in diameter and larger shall be cut in a manner to provide a smooth, clean cut surface. Cuts shall be made with the appropriate pruning shears or pruning saws. Roots shall not be chopped or broken.

5. In areas where proposed curb will be may be lower than existing top of curb and tree roots 2" diameter or larger are present, the soil and roots shall not be graded or laid back. The existing elevation shall be maintained and the curb formed to meet elevation or a short elevation difference roots and top of curb maintained.

Q. Demolition, Forming and Pouring of Drive Way Approaches

1. Demolition of existing driveway approaches located beneath the dripline of any tree shall be completed without disturbing, cutting, or otherwise damaging tree roots and soil located beneath them.

2. The new approach shall be formed at or above the elevation of the existing approach where tree roots 2" diameter or larger are present, without disturbing, cutting or

otherwise damaging tree roots. Maximum drive slopes may be needed at bottom of apron to allow forming of drive over tree roots at top of drive. As with sidewalks, the elevation of every tree roots was not available in design. If tree roots are found to be in conflict with proposed approach, project engineer and urban forester shall be consulted as to how to install drive way with minimal impacts to adjacent trees.

R. Replacement Trees for Tree Removals under Ordinance

1. Location, species, and size of replacement trees are indicated on the drawings. Contractor shall layout individual trees at locations shown on drawings. Contractor shall layout individual trees at locations shown on drawings and be responsible for utility locate requirements. In case of conflicts, notify City Engineer and City Urban Forestry before proceeding with work. Trees shall be laid out and locations approved by City Engineer prior to planting.

2. Trees shall meet and be planted according to City of Houston Standard Specification 02915.

S. Arborist and Urban Forester Qualifications

1. Arborist – Employ qualified arborist acceptable to City's Parks and Recreation Department to complete all tree treatments. Arborist shall be normally engaged in the field and have a minimum of 5 years experience. Qualifications of the selected arborist shall be submitted for review and approval by the project engineer and City of Houston.

2. Urban Forester – An Urban forester shall be hired to monitor and assist with field layout (exact locations of fencing, root pruning, and zero curb cutback) of the tree preservation program during demolition and construction to ensure tree protection procedures and techniques are practiced as specified to address concerns and conditions which occur in the field. At a minimum, the individual responsible for monitoring and field layout of the tree protection shall have a minimum of 5 years of experience as a consultant, and shall not be affiliated with a tree care contractor in the Houston area. Qualifications of the selected urban forester shall be submitted for review and approval by the project engineer and City of Houston Urban Forestry Department.

END OF SECTION

Section 01570

STORM WATER POLLUTION PREVENTION CONTROL

PART 1 GENERAL

1.01 SECTION INCLUDES

A. Implementation of Storm Water Pollution Prevention Plans (SWP3) described in Section 01410 – TPDES Requirement.

B. Installation, maintenance and removal, of storm water pollution prevention structures: diversion dikes, interceptor dikes, diversion swales, interceptor swales, down spout extenders, pipe slope drains, paved flumes and level spreaders. Structures are used during construction and prior to final development of the site.

C. Filter Fabric Barriers:

1. Type 1: Temporary filter fabric barrier for erosion and sediment control in non-channelized flow areas.

2. Type 2: Temporary reinforced filter fabric barrier for erosion and sediment control in channelized flow areas.

D. Hay Bale Fence.

E. Drop Inlet Basket

F. Inlet Sediment Traps

G. Brush Berm

H. Sand Bag Barrier

I. Bagged Gravel Barrier

J. Sediment Basin

K. Inlet Protection Barrier

1.02 MEASUREMENT AND PAYMENT

A. UNIT PRICES

1. Payment for filter fabric barrier is on a linear foot basis measured between limits of beginning and ending of stakes.

2. Payment for reinforced filter fabric barrier is on a linear foot basis measured between limits of beginning and ending of stakes.

3. Payment for drop inlet baskets is on a unit price basis for each drop inlet basket.

4. Payment for storm inlet sediment traps is on a unit price basis for each storm inlet sediment trap.

5. Payment for storm water pollution prevention structures is on a lump sum basis for the project. Earthen structures with outlet and piping include diversion dikes, interceptor dikes, diversion swales, interceptor swales, and excavated earth-outlet sediment trap, embankment earth-outlet sediment trap, down spout extenders, pipe slope drains, paved flumes, stone outlet sediment trap, and level spreaders.

6. Payment for hay bale barrier, if included in Document 00410 - Bid Form, is on a linear foot of accepted bale barriers, if not include in cost of storm water pollution prevention structures.

7. Payment for brush berm, if included in Document 00410 - Bid Form, is on a linear foot of accepted brush berm, if not include in cost of storm water pollution prevention structures.

8. Payment for sandbag barrier, if included in Document 00410 - Bid Form, is on a linear foot basis measured between limits of beginning and ending of sandbags, if not include in cost of storm water pollution prevention structures.

9. Payment for sediment basin with pipe outlet or stone outlet, if included in Document 00410 - Bid Form, is on a square yard basis, if not include in cost of storm water pollution prevention structures.

10. Payment for inlet protection barriers, if included in Document 00410 - Bid Form, is on a linear foot basis measured along outside face of inlet protection barrier, if not include in cost of storm water pollution prevention structures.

11. Refer to Section 01270 - Measurement and Payment for unit price procedures.

B. Stipulated Price (Lump Sum) Contract. If Contract is Stipulated Price Contract, payment for Work in this Section is included in total Stipulated

1.03 REFERENCE STANDARDS

A. ASTM

1. A 36 – Standard Specification for Carbon Structural Steel.

2. D698 – Standard Test Methods for Laboratory Compaction Characteristics of Soil Using Standard Effort (12,400 ft-lbf/ft3 (600kN-m/m3)).

3. D3786 – Standard Test Method for Hydraulic Bursting Strength for knitted Goods and Nonwoven Fabrics.

4. D 4355 - Standard Test Method for Deterioration of Geotextiles from Exposure to Ultraviolet Light and Water (Xenon-Arc Type Apparatus).

5. D 4491 - Standard Test Methods for Water Permeability of Geotextiles by Permittivity.

6. D 4632 - Standard Test Method for Grab Breaking Load and Elongation of Geotextiles.

7. D 4833 - Standard Test Method for Index Puncture Resistance of Geotextiles, Geomembranes, and Related Products.

8. D 6382 - Standard Practice for Dynamic Mechanical Analysis and Thermogravimetry of Roofing and Waterproofing Membrane Material.

B. Storm Water Management Handbook for Construction Activities prepared by City of Houston, Harris County and Harris County Flood Control District.

1.04 SYSTEM DESCRIPTIONS

A. Filter Fabric Barrier Type 1 and Type 2: Install to allow surface or channel runoff percolation through fabric in sheet-flow manner and to retain and accumulate sediment. Maintain Filter Fabric Barriers to remain in proper position and configuration at all times.

B. Hay Bale Fence: Install to allow surface runoff percolation through hay in sheet-flow manner and to retain and accumulate sediment. Maintain Hay Bale Fence to remain in proper position and configuration at all times.

C. Interceptor Dikes and Swales: Construct to direct surface or channel runoff around the project area or runoff from project area into sediment traps.

D. Drop Inlet Baskets: Install to allow runoff percolation through the basket and to retain and accumulate sediment. Clean accumulation of sediment to prevent clogging and backups.

E. Sediment Traps: Construct to pool surface runoff from construction area to allow sediment to settle onto the bottom of trap.

F. Sand Bags: Are used during construction activities in unstabilized minor swales, ditches, or streambeds when the contributing drainage area is no greater than 2 acres. It is also sediment barrier for stage one Inlet.

G. Bassel Gravel Barrier: Are used during construction activities in unstabilized minor swales, ditches, or streambeds when the contributing drainage area is no greater than 2 acres. It is also sediment barrier for stage two Inlet.

H. Drop Inlet Insert Basket: Is a temporary barrier placed within a storm drain inlet (Lower Portion of Stage I and Upper Portion of Stage II Inlets) consisting of a filter fabric supported by a metal frame work to prevent sediment and other pollutants from entering convey system.

I. Brush Berm: Brush Berm is constructed at the perimeter of a distribute site within the developing area.

1.05 SUBMITTALS

A. Conform to requirements of Section 01330 - Submittal Procedures.

B. Submit manufacturer's literature for product specifications and installation instructions.

C. Submit manufacturer-s catalog sheets and other product data on geotextile or filter fabrics, outlet pipe, perforated riser and connectors.

D. Submit proposed methods, equipment, materials, and sequence of operations for storm-water pollution prevention structures.

E. Submit shop drawings for Drop Inlet Baskets.

PART 2 P R O D U C T S

2.01 CONCRETE

A. Concrete: Class B in accordance with Section 03315 – Concrete for Utility Construction or as shown on the Drawings.

2.02 AGREGATE MATERIALS

A. Use poorly graded cobbles with diameter greater than 3 inches and less than 5 inches.

B. Provide gravel lining in accordance with Section 2320 – Utility Backfill Materials or as shown on the drawings.

C. Provide clean cobbles and gravel consisting of crushed concrete or stone. Use clean, hard crushed concrete or stone free from adherent coatings, salt, alkali, dirt, clay, loam, shale, soft or flaky materials, or organic matter.

D. Sediment Pump Pit Aggregate: Use nominal 2-inch diameter river gravel.

2.03 PIPE

A. Polyethylene culvert pipe or PVC sewer pipe in accordance with Section 02505- High Density Polyethylene (HDPE) Solid and Profile Wall Pipe and Section 02506 Polyvinyl Chloride Pipe or as shown on the Drawings.

B. Inlet Pipes: Galvanized steel pipe in accordance with Section 02642 Corrugated Metal Pipe or as shown on the Drawings.

C. Standpipe for Sediment Pump Pits: Galvanized round culvert pipe or round PVC pipe, minimum of 12-inch and a maximum of 24-inch diameter, perforate at 6 to 12 inch centers around circumference.

2.04 GEOTEXTILE FILTER FABRIC

A. Woven or nonwoven geotextile filter fabric made of either polypropylene, polyethylene, ethylene, or polyamide material, in continuous rolls of longest practical length.

B. Grab Strength: 200 lbs in any principal direction (ASTM D-4632), and equivalent opening size between 50 and 140.

C. Furnish ultraviolet inhibitors and stabilizers for minimum 6 months of expected usable construction life at temperature range of 0 degrees F to 120 degrees F.

D. Mirafi, Inc., Synthetic Industries, or equivalent

2.05 BARRIER

A. Wire Barrier: Woven galvanized steel wire, 14 gauge by 6-inch square mesh spacing, minimum 24 inch roll or sheet width of longest practical length.

B. Barrier Stakes: Nominal 2 by 2 inch moisture-resistant treated wood or steel posts (min. of 1.25 lbs. per linear foot and Brinell Hardness greater than 140) with safety caps on top; length as required for minimum 8 inch bury and full height of filter fabric.

2.06 SANDBAGS

A. Provide woven material made of polypropylene, polyethylene, or polyamide material.

1. Minimum unit weight of four ounces per square yard.

2. Minimum grab strength of 100 lbs in any principal direction (ASTM D4632)

3. Mullen burst strength exceeding 300 lbs (ASTM D4833).

4. Ultraviolet stability exceeding 70 percent. After 500 hours of exposure (ASTM 4355).

5. Size: Length:18 to 24 inches. Width: 12 to 18 inches. Thickness: 6 to 8 inches. Weight: Approximately 40 to 50 pounds not to exceed 75 pounds.

2.07 Bagged gravel Barrier

1. Minimum unit weight of four ounces per square yard.

2. Minimum grab strength of 100 lbs in any principal direction (ASTM D4632)

3. Mullen burst strength exceeding 300 lbs (ASTM D4833).

4. Ultraviolet stability exceeding 70 percent. After 500 hours of exposure (ASTM 4355).

5. Size: Length:18 to 24 inches. Width: 12 to 18 inches. Thickness: 6 to 8 inches. Weight: Approximately 40 to 50 pounds not to exceed 75 pounds.

2.08 DROP INLET BASKET

A. Provide steel frame members in accordance with ASTM A36.

B. Construct top frame of basket with two short sides of 2 inch by 2 inch and single long side of 1 inch by 1 inch, 1/8 inch angle iron. Construct basket hangers of 2 inch by 1/4 inch iron bars. Construct bottom frame of 1 inch by 1/4 inch iron bar or 1/4 inch plate with center 3 inches removed. Use minimum 1/4 inch diameter iron rods or equivalent for sides of inlet basket. Weld minimum of 14 rods in place between top frame/basket hanger and bottom frame. Exact dimensions for top frame and insert basket will be determined based on dimensions of type of inlet being protected.

2.09 HAY BALE

A. Hay: Standard-baled agricultural hay bound by wire, nylon, or polypropylene rope. Do not use jute or cotton binding.

B. Hay Bale Stakes (applicable where bales are on soil): No. 3 (3/8 diameter) reinforcing bars, deformed or smooth at Contractor's option, length as required for minimum 18 inch bury and full height bales.

PART 3 E X E C U T I O N

3.01 PREPARATION, INSTALLATION AND MAINTEINANCE

A. Provide erosion and sediment control structures at locations shown on the Drawings.

B. Do not clear, grub or rough cut until erosion and sediment control systems are in place unless approved by Project Manger to allow installation of erosion and sediment control systems, soil testing and surveying.

C. Maintain existing erosion and sediment control systems located within project site until acceptance of Project or until directed by Project Manger to remove and discard existing system.

D. Regularly inspect and repair or replace damaged components of erosion and sediment control structures. Unless otherwise directed, maintain erosion and sediment control structure until project area stabilization is accepted. . Redress and replace granular fill at outlets as needed to replenish depleted granular fill. Remove erosion and sediment control structures promptly when directed by Project Manger. Dispose of materials in accordance with Section 01576 - Waste Material Disposal.

E. Remove and dispose sediment deposits at the designated spoil site for the Project. If a project spoil site is not designated on Drawings, dispose of sediment off site at approved location in accordance with Section 01576 - Waste Material Disposal.

F. Unless otherwise shown on the Drawings, compact embankments, excavations, and trenches in accordance with Section 02315 Roadway Excavation or Section 2317 Excavation and Backfill for Utilities.

G. Prohibit equipment and vehicles from maneuvering on areas outside of dedicated right of way and easements for construction. Immediately repair

damage caused by construction traffic to erosion and sediment control structures.

H. Protect existing trees and plants in accordance with Section 1562 – Tree and Plant Protection.

3.02 SEDIMENT TRAPS

A. Install sediment traps so that surface runoff shall percolate through system in sheet flow fashion and allow retention and accumulation of sediment.

B. Inspect sediment traps after each rainfall, daily during periods of prolonged rainfall, and at a minimum once each week. Repair or replace damaged sections immediately.

C. Use fill material for embankment in accordance with Section 02320 – Utility Backfill Materials.

D. Excavation length and height shall be as specified on Drawings. Use side slopes of 2:1 or flatter.

E. Stone outlet sediment traps:

1. Maintain minimum of 6 inches between top of core material and top of stone outlet, minimum of 4 inches between bottom of core material and existing ground and minimum of 1 foot between top of stone outlet and top of embankment.

2. Embed cobbles minimum of 4 inches into existing ground for stone outlet. Core shall be minimum of 1 foot in height and in width and wrapped in triple layer of geotextile filter fabric.

F. Sediment Basin with Pipe Outlet Construction Methods: Install outlet pipe and riser as shown on the Drawings.

G. Remove sediment deposits when design basin volume is reduced by one-third or sediment level is one foot below principal spillway crest, whichever is less.

3.03 FILTER FABRIC BARRIER CONSTRUCTION METHODS

A. Fence Type 1: Filter Fabric: Barrier

1. Install stakes 3 feet on center maximum and firmly embed minimum 8 inches in soil. If filter fabric is factory preassembled with support netting, then maximum support spacing is 8 feet. Install wood stakes at a slight angle toward the source of anticipated runoff.

2. Trench in the toe of the fence lines so the downward face of the trenches is flat and perpendicular to direction of flow. V-trench configuration as shown on Drawings may also be used.

3. Lay fabric along edges of trenches in longest practical continuous runs to minimize joints. Make joints only at a support post. Splice with minimum 6-inch overlap and seal securely.

4. Staple filter fabric to stakes at maximum 3 inches on center. Extend fabric minimum 18 inches and maximum 36 inches above natural ground.

5. Backfill and compact trench.

B. Barrier Type 2: Reinforced Filter Fabric Barrier

1. Layout barrier same as for Type 1.

2. Install stakes at 6 feet on center maximum and at each joint in wire fence, firmly embedded 1-foot minimum, and inclined it as for Type 1.

3. Tie wire fence to stakes with wire at 6 inches on center maximum. Overlap joints minimum one bay of mesh.

4. Install trench same as for Type 1.

5. Fasten filter fabric wire fence with tie wires at 3 inches on center maximum.

6. Layout fabric same as for Type 1. Fasten to wire fence with wire ties at 3 inches on center maximum and, if applicable, to stakes above top of wire fence it as for Type 1.

7. Backfill and compact trench.

8. Attach filter fabric to wooden fence stakes spaced a maximum of 6 feet apart or steel fence stakes spaced a maximum of 8 feet apart and embedded a minimum of 12 inches. Install stakes at a slight angle toward source of anticipated runoff.

9. Trench in toe of filter fabric barrier with spade or mechanical trencher so that downward face of trench is flat and perpendicular to direction of flow. A V-trench configuration may also be used. Lay filter fabric along edges of trench. Backfill and compact trench upon completion of Construction.

10. Filter fabric fence shall have a minimum height of 18 inches and a maximum height of 36 inches above natural ground.

11. Cut length of fence to minimize use of joints. When joints are necessary,

splice fabric together only at support post with minimum 6 inch overlap and seal securely.

12. When used in swales, ditches or diversions, elevation of barrier at top of filter fabric at flow line location in channel shall be lower than bottom elevation of filter fabric at ends of barrier or top of bank, whichever is less, in order to keep storm water discharge in channel from overtopping bank.

C. Triangular Filter Fabric Barrier Construction Methods

1. Attach filter fabric to wire fencing, 18 inches on each side. Provide a fabric cover and skirt with continuous wrapping of fabric. Skirt should form continuous extension of fabric on upstream side of fence.

2. Secure triangular fabric filter barrier in place using one of the following methods:
   a. Toe-in skirt 6 inches with mechanically compacted material;
   b. Weight down skirt with continuous layer of 3-inch to 5-inch graded rock; or
   c. Trench-in entire structure 4 inches.

3. Anchor triangular fabric filter barrier structure and skirt securely in place using 6-inch wire staples on 2-foot centers on both edges and on skirt, or staked using 18-inch by 3/8-inch diameter re-bar with tee ends.

4. Lap fabric filter material by 6 inches to cover segment joints. Fasten joints with galvanized shoat rings.

3.04 DIKE AND SWALE

A. Unless otherwise indicated, maintain minimum dike height of 18 inches, measured from cleared ground at up slope toe to top of dike. Maintain side slopes of 2:1 or flatter.

B. Dike and Swale Stabilization: When shown on the Drawings, place gravel lining 3 inches thick and compacted into the soil or 6 inches thick if truck crossing is expected. Extend gravel lining across bottom and up both sides of swale minimum height of 8 inches vertically, above bottom. Gravel lining on dike side shall extend up the up slope side of dike a minimum height of 8 inches, measured vertically from interface of existing or graded ground and up slope toe of dike, as shown on Drawings.

C. Divert flow from dikes and swales to sediment basins, stabilized outlets, or sediment trapping devices of types and at locations shown on Drawings. Grade dikes and swales as shown on Drawings, or, if not specified, provide positive drainage with maximum grade of 1 percent to outlet or basin.

D. Clear in accordance with Section 2233 – Clearing and Grubbing Compact embankments in accordance with Section 2315 – Roadway Excavation.

E. Carry out excavation for swale construction so that erosion and water pollution is minimal. Minimum depth shall be 1 foot and bottom width shall be 4 feet, with level swale bottom. Excavation slopes shall be 2:1 or flatter. Clear, grub and strip excavation area of vegetation and root material.

3.05 DOWN SPOUT EXTENDER

A. Down spout extender shall have slope of approximately 1 percent. Use pipe diameter of 4 inches or as shown on the Drawings. Place pipe in accordance with Section 2317 - Bedding and Backfill for Utilities.

3.06 PIPE SLOPE DRAIN

A. Compact soil around and under drain entrance section to top of embankment in lifts appropriately sized for method of compaction utilized.

B. Inlet pipe shall have slope of 1 percent or greater. Use pipe diameter as shown on the Drawings.

C. Top of embankment over inlet pipe and embankments directing water to pipe shall be at least 1 foot higher at all points than top of inlet pipe.

D. Pipe shall be secured with hold-down grommets spaced 10 feet on centers.

E. Place riprap apron with a depth equal to pipe diameter with 2:1 side slopes.

3.07 PAVED FLUME

A. Compact soil around and under the entrance section to top of the embankment in lifts appropriately sized for method of compaction utilized.

B. Construct subgrade to required elevations. Remove and replace soft sections and unsuitable material. Compact subgrade thoroughly and shape to a smooth, uniform surface.

C. Construct permanent paved flumes in accordance with Drawings.

D. Remove sediment from riprap apron when sediment has accumulated to depth of one foot.

3.08 LEVEL SPREADER

A. Construct level spreader on undisturbed soil and not on fill. Ensure that spreader lip is level for uniform spreading of storm runoff.

B. Maintain at required depth, grade, and cross section as specified on Drawings. Remove sediment deposits as well as projections or other irregularities which will impede normal flow.

3.09 INLET PROTECTION BARRIER

A. Place sandbags for Stage I, Bagged gravel for Stage II and filter fabric barriers at locations shown on the SWP3. Maintain to allow minimal inlet in flow restrictions / blockage during storm event.

3.10 DROP INLET BASKET CONSTRUCTION METHODS

A. Fit inlet insert basket into inlet without gaps around insert at locations shown on the SWP3.

B. Support for inlet insert basket shall consist of fabricated metal as shown on Drawings.

C. Push down and form filter fabric to shape of basket. Use sheet of fabric large enough to be supported by basket frame when holding sediment and extend at least 6 inches past frame. Place inlet grates over basket/frame to serve as fabric anchor.

D. Remove sediment deposit after each storm event and whenever accumulation exceeds 1-inch depth during weekly inspections.

3.11 HAY BALE FENCE CONSTRUCTION METHODS

A. Place bales in row with ends tightly abutting adjacent bales. Place bales with bindings parallel to ground surface.

B. Embed bale in soil a minimum of 4 inches.

C. Securely anchor bales in place with Hay Bale Stakes driven through bales a minimum of 18-inches into ground. Angle first stake in each bale toward previously laid bale to force bales together.

D. Fill gaps between bales with straw to prevent water from channeling between bales. Wedge carefully in order not to separate bales.

E. Replace with new hay bale fence every two months or as required by Project Manager.

3.12 BRUSH BERM CONSTRUCTION METHODS

A. Construct brush berm along contour lines by hand placing method. Do not use machine placement of brush berm.

B. Use woody brush and branches having diameter less than 2-inches with 6-inches overlap. Avoid incorporation of annual weeds and soil into brush berm.

C. Use minimum height of 18-inches measured from top of existing ground at upslope toe to top of berm. Top width shall be 24 inches minimum and side slopes shall be 2:1 or flatter.

D. Embed brush berm into soil a minimum of 4-inches and anchor using wire, nylon or polypropylene rope across berm with a minimum tension of 50 pounds. Tie rope securely to 18-inch x 3/8-inch diameter rebar stakes driven into ground on 4-foot centers on both sides of berm.

3.13 STREET AND SIDEWALK CLEANING

A. Keep areas clean of construction debris and mud carried by construction vehicles and equipment. If necessary, install stabilized construction exits at construction, staging, storage, and disposal areas, following Section 01575-Stabilized Construction Exit.

B. In lieu of or in addition to stabilized construction exits, shovel or sweep pavements as required to keep areas clean. Do not waterhose or sweep debris and mud off street into adjacent areas, except, hose sidewalks during off-peak hours, after sweeping.

3.14 WASTE COLLECTION AREAS

A. Prevent water runoff from passing through waste collection areas, and prevent water runoff from waste collection areas migrating outside collection areas.

3.15 EQUIPMENT MAINTENANCE AND REPAIR

A. Confine maintenance and repair of construction machinery and equipment to areas specifically designated for that purpose, so fuels, lubricants, solvents, and other potential pollutants are not washed directly into receiving streams or storm water conveyance systems. Provide these areas with adequate waste disposal receptacles for liquid and solid waste. Clean and inspect maintenance areas daily.

B. Where designated equipment maintenance areas are not feasible, take precautions during each individual repair or maintenance operation to prevent potential pollutants from washing into streams or conveyance systems. Provide temporary waste disposal receptacles.

3.16 VEHICLE/ EQUIPMENT WASHING AREAS

A. Install wash area (stabilized with coarse aggregate) adjacent to stabilized construction exit(s), as required to prevent mud and dirt run-off. Release wash water into drainage swales or inlets protected by erosion and sediment controls. Build wash areas following Section 01575- Stabilized Construction Exit. Install gravel or rock base beneath wash areas.

B. Wash vehicles only at designated wash areas. Do not wash vehicles such as concrete delivery trucks or dump trucks and other construction equipment at locations where runoff flows directly into waterways or storm water conveyance systems.

C. Locate wash areas to spread out and evaporate or infiltrate wash water directly into ground, or collect runoff in temporary holding or seepage basins.

3.17 WATER RUNOFF AND EROSION CONTROL

A. Control surface water, runoff, subsurface water, and water from excavations and structures to prevent damage to the Work, the site, or adjoining properties. Follow environment requirements.

B. Control fill, grading and ditching to direct water away from excavations, pits, tunnels, and other construction areas, and to direct drainage to proper runoff courses to prevent erosion, sedimentation or damage.

C. Provide, operate, and maintain equipment and facilities of adequate size to control surface water.

D. Retain existing drainage patterns external to the site by constructing temporary earth berms, sedimentation basins, retaining areas, and temporary ground cover as required to control conditions.

E. Plan and execute construction and earth work to control surface drainage from cuts and fills, and from borrow and waste disposal areas, to prevent erosion and sedimentation.

1. Hold area of bare soil exposed at one time to a minimum.

2. Provide temporary controls such as berms, dikes, and drains.

F. Construct fill and waste areas by selective placement to eliminate surface silts or clays which will erode.

G. Inspect earthwork periodically to detect start of erosion. Immediately apply corrective measures as required to control erosion.

H. Dispose of sediments offsite, not in or adjacent to waterways or floodplains, nor allow sediments to flush into streams or drainage ways. Assume

responsibility for offsite disposal location.

I. Unless otherwise indicated, compact embankments, excavations, and trenches by mechanically blading, tamping, and rolling soil in maximum of 8-inch layers. Provide compaction density at minimum 90 percent Standard Proctor ASTM D-698-78 density. Make at least one test per 500 cubic yards of embankment.

J. Prohibit equipment and vehicles from maneuver on areas outside of dedicated rights-of-way and easements for construction. Immediately repair damage to erosion and sedimentation control systems caused by construction traffic.

K. Do not damage existing trees intended to remain.

3.18 REMOVAL OF CONTROLS

A. Remove erosion and sediment controls when the site is finally stabilized or as directed by Project Manager.

B. Dispose of sediments and waste products following Section 01505-Temporary Facilities.

END OF SECTION

Section 01575

STABILIZED CONSTRUCTION ACCESS

PART 1 G E N E R A L

1.01 SECTION INCLUDES

A. Installation and removal of erosion and sediment control for stabilized construction access used during construction and prior to final development of site, as shown in City of Houston Standard Construction details, DWG No. 01571-01.

1.02 MEASUREMENT AND PAYMENT

A. Unit Price Contracts. If Contract is Unit Price Contract, payment for work in this Section will be based on the following:

1. Stabilized construction roads, parking areas, access and wash areas: per square yard of aggregate/recycled concrete without reinforcing placed in 8-inch layers. No separate payment will be made for street cleaning necessary to meet TPDES requirements. Include cost of work for street cleaning under related Specification section.

B. Stipulated Price (Lump Sum) Contracts. If the Contract is a Stipulated Price Contract, include payment for work under this Section in the total Stipulated Price.

1.03 SUBMITTALS

A. Conform to requirements of Section 01330 - Submittal Procedures.

B. Submit manufacturer's catalog sheets and other Product Data on geotextile fabric.

C. Submit sieve analysis of aggregates conforming to requirements of this Specification.

1.04 REFERENCES

A. ASTM D 4632 - Standard Test Method for Grab Breaking Load and Elongation of Geotextiles.

B. Storm Water Quality Management Handbook For Construction Activities prepared by the City of Houston, Harris County and Harris County Flood Control District.

PART 2 PRODUCTS

2.01 GEOTEXTILE FABRIC

A. Provide woven or non-woven geotextile fabric made of polypropylene, polyethylene, ethylene, or polyamide material.

B. Geotextile fabric: Minimum grab strength of 200 lbs in any principal direction (ASTM D-4632) and equivalent opening size between 50 and 140.

C. Geotextile and threads: Resistant to chemical attack, mildew, and rot and contain ultraviolet ray inhibitors and stabilizers to provide minimum of six months of expected usable life at temperature range of 0 to 120 degrees F.

D. Representative Manufacturers: Mirafi, Inc. or equal.

2.02 COARSE AGGREGATES

A. Coarse aggregate: Crushed stone, gravel, crushed blast furnace slag, or combination of these materials. Aggregate shall be composed of clean, hard, durable materials free from adherent coatings of, salt, alkali, dirt, clay, loam, shale, soft or flaky materials, or organic and injurious matter.

B. Coarse aggregates to consist of open graded rock 2" to 8" in size.

PART 3 EXECUTION

3.01 PREPARATION AND INSTALLATION

A. Provide stabilized construction roads and access at construction, staging, parking, storage,
and disposal areas to keep street clean of mud carried by construction vehicles and equipment. Construct erosion and sediment controls in accordance with Drawings and Specification requirements.

B. Do not clear grub or rough cut until erosion and sediment control systems are in place, unless approved by Project Manager to allow soil testing and surveying.

C. Maintain existing construction site erosion and sediment control systems until acceptance of the Work or until removal of existing systems is approved by Project Manager.

D. Regularly inspect, repair or replace components of stabilized construction access. Unless otherwise directed, maintain stabilized construction roads and

access until the City accepts the Work. Remove stabilized construction roads and access promptly when directed by Project Manager. Discard removed materials off-site.

E. Remove and dispose of sediment deposits at designated spoil site for Project. If a spoil site is not designated on Drawings, dispose of sediment off-site at a location not in or adjacent to stream or flood plain. Assume responsibility for off-site disposal.

F. Spread compacted and stabilized sediment evenly throughout site. Do not allow sediment to flush into streams or drainage ways. Dispose of contaminated sediment in accordance with existing federal, state, and local rules and regulations.

G. Prohibit equipment and vehicles from maneuvering on areas outside of dedicated rights-of-way and easements for construction. Immediately repair damage to erosion and sediment control systems caused by construction traffic.

H. Conduct construction operations in conformance with erosion control requirements of Specification 01570 – Storm Water Pollution Control.

3.02 CONSTRUCTION MAINTENANCE

A. Provide stabilized access roads, subdivision roads, parking areas, and other on-site vehicle transportation routes where shown on Drawings.

B. Provide stabilized construction access and vehicle washing areas, when approved by Project Manager, of sizes and at locations shown on Drawings or as specified in this Section.

C. Clean tires to remove sediment on vehicles leaving construction areas prior to entering public right-of-ways. Construct wash areas needed to remove sediment. Release wash water into drainage swales or inlets protected by erosion and sediment control measures.

D. Details for stabilized construction access are shown on Drawings. Construct other stabilized areas to same requirements. Maintain minimum roadway widths of 14 feet for one-way traffic and 20 feet for two-way traffic and of sufficient width to allow ingress and egress. Place geotextile fabric as a permeable separator to prevent mixing of coarse aggregate with underlaying soil. Limit exposure of geotextile fabric to elements between laydown and cover to a maximum 14 days to minimize potential damage.

E. Grade roads and parking areas to provide sufficient drainage away from stabilized areas. Use sandbags, gravel, boards, or similar materials to prevent sediment from entering public right-of-ways, waterways or

storm water conveyance systems.

F. Inspect and maintain stabilized areas daily. Provide periodic top dressing with additional coarse aggregates to maintain required depth. Repair and clean out damaged control systems used to trap sediment. Immediately remove spilled, dropped, washed, or tracked sediment from public right-of-ways.

G. Maintain lengths of stabilized areas as shown on Drawings or a minimum of 50 feet. Maintain a minimum thickness of 8 inches. Maintain minimum widths at all points of ingress or egress.

H. Stabilize other areas with the same thickness, and width of coarse aggregate required for stabilized construction access, except where shown otherwise on Drawings.

I. Stabilized areas may be widened or lengthened to accommodate truck washing areas when authorized by Project Manager.

J. Clean street daily before end of workday. When excess sediments have tracked onto streets, Project Manager may direct Contractor to clean street as often as necessary. Remove and legally dispose of sediments.

K. Use other erosion and sediment control measures to prevent sediment runoff during rain periods and non-working hours and when storm discharges are expected.

END OF SECTION

Section 01576

WASTE MATERIAL DISPOSAL

PART 1 G E N E R A L

1.01 SECTION INCLUDES

A. Disposal of waste material and salvageable material.

1.02 SUBMITTALS

A. Conform to requirements of Section 01330 - Submittal Procedures.

B. Submit copy of approved "Development Permit", as defined in Chapter 19 of Flood Plain Ordinance (City Ordinance Number 81-914 and Number 85-1705), prior to disposal of excess material in areas designated as being in "100-year Flood Hazard Area" within the City. Contact the City of Houston Flood Plain Manager, 3300 Main Street, at (713) 525-7605 for flood plain information.

C. Obtain and submit disposal permits for proposed disposal sites, if required by local ordinances.

D. Submit copy of written permission from property owner, with description of property, prior to disposal of excess material adjacent to Project. Submit written and signed release from property owner upon completion of disposal work.

E. Describe waste materials expected to be stored on-site and a description of controls to reduce Pollutants from these materials, including storage practices to minimize exposure of materials to storm water; and spill prevention and response measures in the Project's Storm Water Pollution Prevention Plan (SWPPP). Refer to Section 01410 – TPDES Requirements.

PART 2 P R O D U C T S - Not Used

PART 3 E X E C U T I O N

3.01 SALVAGEABLE MATERIAL

A. Excavated Material: When indicated on Drawings, load, haul, and deposit excavated material at location or locations shown on Drawings outside limits of Project.

B. Base, Surface, and Bedding Material: Load shell, gravel, bituminous, or other base and surfacing material designated for salvage into City trucks.

C. Pipe Culvert: Load culverts designated for salvage into City trucks.

D. Other Salvageable Materials: Conform to requirements of individual Specification Sections.

E. Coordinate loading of salvageable material on City trucks with Project Manager.

3.02 EXCESS MATERIAL

A. Remove and legally dispose of vegetation, rubble, broken concrete, debris, asphaltic concrete pavement, excess soil, and other materials not designated for salvage from job site.

B. Excess soil may be deposited on private property adjacent to Project when written permission is obtained from property owner. See Paragraph 1.02 D above.

C. Verify flood plain status of any proposed disposal site. Do not dispose of excavated materials in area designated as within 100-year Flood Hazard Area unless “Development Permit” has been obtained. Remove excess material placed in "100-year Flood Hazard Area" within the City, without “Development Permit", at no additional cost to the City.

D. Remove waste materials from site daily, in order to maintain site in neat and orderly condition.

END OF SECTION

Section 01578

CONTROL OF GROUND AND SURFACE WATER

PART 1 GENERAL

1.01 SECTION INCLUDES

A. Dewatering, depressurizing, draining, and maintaining trenches, shaft excavations, structural excavations and foundation beds in stable condition, and controlling ground water conditions for tunnel excavations.

B. Protecting work against surface runoff and rising floodwaters.

C. Trapping suspended sediment in the discharge form the surface and ground water control systems.

1.02 MEASUREMENT AND PAYMENT

A. UNIT PRICES

1. When noted, dewatering of trench or excavation during course of project shall be measured per linear foot and paid for at contract unit prices for dewatering, when directed to perform such work by Project Manager. Dewatering must be fully detailed in submittal and submittal must be approved prior to performing dewatering work before payment will be made for dewatering. No payment will be made for work unless directed to perform work by Project Manager.

2. Presence of a pump on project does not constitute dewatering for payment under bid item "Ground Water Control for Open Cut Construction."

3. Dewatering required during course of project to lower water table for other utility installation less than 24 inches in diameter, construction of structures, removal of standing water, surface drainage seepage, or to protect against rising waters or floods shall be considered incidental to Work unless otherwise noted.

4. No separate payment will be made for groundwater control associated with augering, tunnels or casing. Include cost in unit price for augering.

5. Refer to Section 01270 - Measurement and Payment for unit price procedures.

B. Stipulated Price (Lump Sum) Contract. If the Contract is a Stipulated Price Contract, include payment for work under this section in the total Stipulated

Price.

1.03 REFERENCES

A. ASTM D 698 - Standard Test Methods for Laboratory Compaction of Soils Using Standard Effort (12,400 ft-lbf/ft3 (600kN-m/m3)

B. Federal Regulations, 29 CFR Part 1926, Standards-Excavation, Occupational Safety and Health Administration (OSHA)

C. Storm Water Management Handbook for Construction Activities prepared by City of Houston, Harris County and Harris County Flood Control District.

1.04 DEFINITIONS

A. Ground water control system: system used to dewater and depressurize water-bearing soil layers.

1. Dewatering: lowering the water table and intercepting seepage that would otherwise emerge from slopes or bottoms of excavations, or into tunnels and shafts; and disposing of removed water. Intent of dewatering is to increase stability of tunnel excavations and excavated slopes, prevent dislocation of material from slopes or bottoms of excavations, reduce lateral loads on sheeting and bracing, improve excavating and hauling characteristics of excavated material, prevent failure or heaving of bottom of excavations, and to provide suitable conditions for placement of backfill materials and construction of structures and other installations.

2. Depressurization: includes reduction in piezometric pressure within strata not controlled by dewatering alone, necessary to prevent failure or heaving of excavation bottom or instability of tunnel excavations.

B. Excavation drainage: includes keeping excavations free of surface and seepage water.

C. Surface drainage: includes use of temporary drainage ditches and dikes and installation of temporary culverts and sump pumps with discharge lines necessary to protect Work from any source of surface water.

D. Monitoring facilities for ground water control system: includes piezometers, monitoring wells and flow meters for observing and recording flow rates.

1.05 PERFORMANCE REQUIREMENTS

A. Conduct subsurface investigations to identify groundwater conditions and to

provide parameters for design, installation, and operation of groundwater control systems. Submit proposed method and spacing of readings for review prior to obtaining water level readings.

B. Design ground water control system, compatible with requirements of Federal Regulations 29 CFR Part 1926 and Section 02260 - Trench Safety Systems, to produce following results:

1. Effectively reduce hydrostatic pressure affecting:

   a. Excavations

   b. Tunnel excavation, face stability or seepage into tunnels

2. Develop substantially dry and stable subgrade for subsequent construction operations

3. Preclude damage to adjacent properties, buildings, structures, utilities, installed facilities and other work

4. Prevent loss of fines, seepage, boils, quick condition, or softening of foundation strata

5. Maintain stability of sides and bottom of excavations

C. Provide ground water control systems that include single-stage or multiple-stage well point systems, eductor and ejector-type systems, deep wells, or combinations of these equipment types.

D. Provide drainage of seepage water and surface water, as well as water from other sources entering excavation. Excavation drainage may include placement of drainage materials, crushed stone and filter fabric, together with sump pumping.

E. Provide ditches, berms, pumps and other methods necessary to divert and drain surface water from excavation and other work areas.

F. Locate ground water control and drainage systems so as not to interfere with utilities, construction operations, adjacent properties, or adjacent water wells.

G. Assume sole responsibility for ground water control systems and for any loss or damage resulting from partial or complete failure of protective measures and settlement or resultant damage caused by ground water control operations. Modify ground water control systems or operations if they cause or threaten to cause damage to new construction, existing site improvements, adjacent property, adjacent water wells, or potentially contaminated areas. Repair damage caused by ground water control systems or resulting from

failure of system to protect property as required.

H. Install an adequate number of piezometers installed at proper locations and depths, necessary to provide meaningful observations of conditions affecting excavation, adjacent structures and water wells.

I. Install environmental monitoring wells at proper locations and depths necessary to provide adequate observations of hydrostatic conditions and possible contaminant transport from contamination sources into work area or ground water control system.

1.06 SUBMITTALS

A. Conform to requirements of Section 01330 - Submittals Procedures.

B. Submit Ground Water and Surface Water Control Plan for review by Project Manager prior to start of excavation work. Include the following:

1. Results of subsurface investigations and description of extent and characteristics of water bearing layers subject to ground water control

2. Names of equipment Suppliers and installation Subcontractors

3. Description of proposed ground water control systems indicating arrangement, location, depth and capacities of system components, installation details and criteria and operation and maintenance procedures

4. Description of proposed monitoring facilities indicating depths and locations of piezometers and monitoring wells, monitoring installation details and criteria, type of equipment and instrumentation with pertinent data and characteristics

5. Description of proposed filters including types, sizes, capacities and manufacturer's application recommendations

6. Design calculations demonstrating adequacy of proposed systems for intended applications. Define potential area of influence of ground water control operation near contaminated areas.

7. Operating requirements, including piezometric control elevations for dewatering and depressurization

8. Excavation drainage methods including typical drainage layers, sump pump application and other means

9. Surface water control and drainage installations

10. Proposed methods and locations for disposing of removed water

C. Submit following records upon completion of initial installation:

1. Installation and development reports for well points, eductors, and deep wells

2. Installation reports and baseline readings for piezometers and monitoring wells

3. Baseline analytical test data of water from monitoring wells

4. Initial flow rates

D. Submit the following records weekly during control of ground and surface water operations:

1. Records of flow rates and piezometric elevations obtained during monitoring of dewatering and depressurization. Refer to Paragraph 3.02, Requirements for Eductor, Well Points, or Deep Wells.

2. Maintenance records for ground water control installations, piezometers and monitoring wells

1.07 ENVIRONMENTAL REQUIREMENTS

A. Comply with requirements of agencies having jurisdiction.

B. Comply with Texas Commission on Environmental Quality regulations and Texas Water Well Drillers Association for development, drilling, and abandonment of wells used in dewatering system.

C. Obtain necessary permits from agencies with jurisdiction over use of groundwater and matters affecting well installation, water discharge, and use of existing storm drains and natural water sources. Since review and permitting process may be lengthy, take early action to obtain required approvals.

D. Monitor ground water discharge for contamination while performing pumping in vicinity of potentially contaminated sites.

PART 2 P R O D U C T S

2.01 EQUIPMENT AND MATERIALS

A. Select equipment and materials necessary to achieve desired results for dewatering. Selected equipment and materials are subject to review by Project Manager through submittals required in Paragraph 1.06, Submittals.

B. Use experienced contractors, regularly engaged in ground water control system design, installation, and operation, to furnish and install and operate educators, well points, or deep wells, when needed

C. Maintain equipment in good repair and operating condition.

D. Keep sufficient standby equipment and materials available to ensure continuous operation, where required.

E. Portable Sediment Tank System: Standard 55-gallon steel or plastic drums, free of hazardous material contamination.

1. Shop or field fabricate tanks in series with main inlet pipe, inter-tank pipes and discharge pipes, using quantities sufficient to collect sediments from discharge water.

PART 3 E X E C U T I O N

3.01 GROUND WATER CONTROL

A. Perform necessary subsurface investigation to identify water bearing layers, piezometric pressures and soil parameters for design and installation of ground water control systems. Perform pump tests, if necessary to determine draw down characteristics. Present results in the Ground Water and Surface Water Control Plan. submittal

B. Provide labor, material, equipment, techniques and methods to lower, control and handle ground water in manner compatible with construction methods and site conditions. Monitor effectiveness of installed system and its effect on adjacent property.

C. Install, operate, and maintain ground water control systems in accordance with the Ground Water and Surface Water Control Plan. Notify Project Manager in writing of changes made to accommodate field conditions and changes to Work. Provide revised drawings and calculations with notification.

D. Provide continuous system operation, including nights, weekends, and holidays. Arrange appropriate backup if electrical power is primary energy source for dewatering system.

E. Monitor operations to verify systems lower ground water piezometric levels at rate required to maintain dry excavation resulting in stable subgrade for

subsequent construction operations.

F. Depressurize zones where hydrostatic pressures in confined water bearing layers exist below excavations to eliminate risk of uplift or other instability of excavation or installed works. Define allowable piezometric elevations in the Ground Water and Surface Water Control Plan.

G. Removal of ground water control installations.

1. Remove pumping system components and piping when ground water control is no longer required.

2. Remove piezometers, including piezometers installed during design phase investigations and left for Contractor's use, upon completion of testing, as required in accordance with Part 3 of applicable specification.

3. Remove monitoring wells when directed by Project Manager.

4. Grout abandoned well and piezometer holes. Fill piping that is not removed with cement-bentonite grout or cement-sand grout.

H. During backfilling, maintain water level a minimum of 5 feet below prevailing level of backfill. Do not allow the water level to cause uplift pressures in excess of 80 percent of downward pressure produced by weight of structure or backfill in place. Do not allow water levels to rise into cement-stabilized sand until at least 48 hour after placement.

I. Provide uniform pipe diameter for each pipe drain run constructed for dewatering. Remove pipe drains when no longer required. If pipe removal is impractical, grout connections at 50-foot intervals and fill pipe with cement-bentonite grout or cement-sand grout after removal from service.

J. The extent of ground water control for structures with permanent perforated underground drainage systems may be reduced, for units designed to withstand hydrostatic uplift pressure. Provide a means to drain affected portions of underground systems, including standby equipment. Maintain drainage systems during construction operations.

K. Remove systems upon completion of construction or when dewatering and control of surface or ground water is no longer required.

L. Compact backfill to not less than 95 percent of maximum dry density in accordance with ASTM D 698.

M. Foundation Slab: Maintain saturation line at least 3 feet below lowest elevations where concrete is to be placed. Drain foundations in areas where

concrete is to be placed before placing reinforcing steel. Keep free from water for 3 days after concrete is placed.

3.02 REQUIREMENTS FOR EDUCTOR, WELL POINTS, OR DEEP WELLS

A. For aboveground piping in ground water control system, include a 12-inch minimum length of clear, transparent piping between each eductor well or well point and discharge header to allow visual monitoring of discharge from each installation.

B. Install sufficient piezometers or monitoring wells to show that trench or shaft excavations in water bearing materials are pre-drained prior to excavation. Provide separate piezometers for monitoring of dewatering and for monitoring of depressurization. Install piezometers and monitoring wells for tunneling as appropriate for selected method of work.

C. Install piezometers or monitoring wells at least one week in advance of the start of associated excavation.

D. Dewatering may be omitted for portions of under drains or other excavations, where auger borings and piezometers or monitoring wells show that soil is pre-drained by existing systems and that ground water control plan criteria are satisfied.

E. Replace installations that produce noticeable amounts of sediments after development.

F. Provide additional ground water control installations, or change method of control if, ground water control plan does not provide satisfactory results based on performance criteria defined by plan and by specifications. Submit revised plan according to Paragraph 1.06B.

3.03 SEDIMENT TRAPS

A. Install sediment tank as shown on approved plan.

B. Inspect daily and clean out tank when one-third of sediment tank is filled with sediment.

3.04 SEDIMENT SUMP PIT

A. Install sediment sump pits as shown on approved plan.

B. Construct standpipe by perforating 12 inch to 24-inch diameter corrugated metal or PVC pipe.

C. Extend standpipe 12 inches to 18 inches above lip of pit.

D. Convey discharge of water pumped from standpipe to sediment trapping device.

E. Fill sites of sump pits, compact to density of surrounding soil and stabilize surface when construction is complete.

3.05 EXCAVATION DRAINAGE

A. Use excavation drainage methods if well-drained conditions can be achieved. Excavation drainage may consist of layers of crushed stone and filter fabric, and sump pumping, in combination with sufficient ground water control wells to maintain stable excavation and backfill conditions.

3.06 MAINTENANCE AND OBSERVATION

A. Conduct daily maintenance and observation of piezometers or monitoring wells while ground water control installations or excavation drainage is operating at the site, or water is seeping into tunnels, and maintain systems in good operating condition.

B. Replace damaged and destroyed piezometers or monitoring wells with new piezometers or wells as necessary to meet observation schedules.

C. Cut off piezometers or monitoring wells in excavation areas where piping is exposed, only as necessary to perform observation as excavation proceeds. Continue to maintain and make specified observations

D. Remove and grout piezometers inside or outside of excavation area when ground water control operations are complete. Remove and grout monitoring wells when directed by Project Manager.

3.07 MONITORING AND RECORDING

A. Monitor and record average flow rate of operation for each deep well, or for each wellpoint or eductor header used in dewatering system. Also, monitor and record water level and ground water recovery. Record observations daily until steady conditions are achieved and twice weekly thereafter.

B. Observe and record elevation of water level daily as long as ground water control system is in operation, and weekly thereafter until Work is completed or piezometers or wells are removed, except when Project Manager determines more frequent monitoring and recording are required. Comply with Project Manager's direction for increased monitoring and recording and

take measures necessary to ensure effective dewatering for intended purpose.

3.08 SURFACE WATER CONTROL

A. Intercept surface water and divert it away from excavations through use of dikes, ditches, curb walls, pipes, sumps or other approved means. Requirement includes temporary works required to protect adjoining properties from surface drainage caused by construction operations.

B. Divert surface water and seepage water into sumps and pump it into drainage channels or storm drains, when approved by agencies having jurisdiction. Provide settling basins when required by agencies.

END OF SECTION

Section 01580

PROJECT IDENTIFICATION SIGNS

PART 1 G E N E R A L

1.01 SECTION INCLUDES

A. Project identification sign description.

B. Project sign installation.

C. Maintenance and removal of Project sign.

1.02 SYSTEM DESCRIPTION

A. Sign Construction: Construct signs of new materials in accordance with Standard Detail provided at the Pre-construction Conference.

B. Appearance: Maintain signs to present a clean and neat look throughout Contract duration.

C. Sign Manufacturer: Experienced professional sign company.

D. Sign Placement: At locations shown in Drawings unless otherwise specified by Project Manager at pre-construction meeting.

1. Provide one sign at each end of a linear Project involving paving, overlay, sewer line, storm drainage, or water main construction located in rights-of-ways.

2. Provide one sign for site or building construction Contracts

3. Provide one sign at each site for Contracts with multiple sites.

4. Sign Relocation: As work progresses, relocate signs if directed by Project Manager in writing. Include cost for one relocation of post-mounted signs in Contract Price. Subsequent relocations, if directed by Project Manager in writing, will be subject to Change Order.

E. Skid-mounted signs: Use for projects with noncontiguous locations where work progresses from one location to another. Design skid structure to withstand a 60 mile-per-hour wind load to the face or back of sign using stakes, straps, or ballast. Contractor shall be responsible for security of signs at each site.

1.03 SUBMITTALS

A. Submit Shop Drawings under provisions of Section 01330 - Submittal Procedures.

B. Show content, layout, lettering style, lettering size, and colors. Make sign and lettering to scale, clearly indicating condensed lettering, if used.

PART 2 P R O D U C T S

2.01 SIGN MATERIALS

A. Structure and Framing: Use new sign materials.

1. Sign Posts: 4-inch by 4-inch pressure treated wood posts, 9 feet long for skid mounting and 12 feet long minimum for in-ground mounting.

2. Skid Bracing: 2-inch by 4-inch wood framing material.

3. Skid Members: 2-inch by 6-inch wood framing material.

4. Fasteners:
   a. Galvanized steel.
   b. Attach sign to posts with 1/2-inch by 5-1/2 inch button head carriage bolts and secure with nuts and flat head washers.
   c. Cover button heads with white reflective film or paint to match sign background.
   d. Use metal brackets and braces and 3/4-inch wood screws to attach sign header.

B. Sign and Sign Header: 3/4-inch thick marine plywood. Use 4-foot by 8 -foot sheet for the sign and a single piece for the header to minimize joints. Do not piece wood sheets to fabricate sign face.

C. Paint and Primers: White industrial grade, fast-drying, oil-based paint with gloss finish for structural and framing members, sign, and sign header material surfaces. Paint all sign surfaces prior to adding adhesive applications.

D. Colors:

1. Sign Background: Reflective white 3M Scotchlite Engineer Grade, Pressure Sensitive Sheeting (White), or approved equal.

2. Border: For red border around area, which designates project name and project amount, use reflective red 3M Scotchlite Engineer Grade, Pressure Sensitive Sheeting (Red), or approved equal.

3. Sign Film: 3M Scotchcal Pressure Sensitive Films, or approved equal for legends, symbols, lettering, and artwork. Match colors to 3M Scotchcal Pressure Sensitive Films.

a.	Lettering Below Seal:	Black
b.	Lettering Above Project Name:	Vivid Blue
c.	Lettering on Blue Background:	White
d.	Background Behind Project Name:	Vivid Blue

E. City Seal: Project Manager will provide City seals to Contractor, as needed.

2.02 SIGN LAYOUT

A. Lettering:

1. Style, Size, and Spacing: Helvetica Regular lettering.

2. Condensed Style: Text may be condensed if needed to maintain sign composition.

B. Composition:

1. Lines with Standard Text
   a. Top line shall read "BUILDING TOGETHER FOR THE FUTURE".
   b. Use lower left below City Seal to list names and titles for Mayor, Controller and Council Members. Place as shown on Drawings with indicated size and spacing.
   c. Center telephone number of the Customer Response Center, "311", near the bottom of the area with the blue background.

2. Lines with Variable Text. Use blue background space for Project name and dollar amount.
   a. Project Manager will provide Project name and dollar amount of Project for preparation of sign. Center name on one or two lines, and dollar amount immediately below Project name, in area with blue background. Use condensed lettering if necessary.

2.03 LAYOUT AND COMPOSITION FOR HEADER

A. City of Houston Seal:
   1. A space of approximately 24 inches in diameter is provided for the City seal, the top 6 inches of which extends above the sign on the sign header.

   2. Construct sign header of same material as sign face. Cut material to match curve of the City seal.

   3. Project Manager will provide the seal to be affixed to the sign by sign maker.

PART 3 E X E C U T I O N

3.01 INSTALLATION

A. Install Project identification signs within seven days after Date of Commencement of the Work.

B. Erect signs at locations shown in Drawings unless otherwise designated by Project Manager at pre-construction meeting. Position sign so it is fully visible and readable to general public.

C. Erect sign level and plumb.

D. If mounted on posts, sink posts 3 to 4 feet below grade and stabilize posts to minimize lateral motion. Leave a minimum of 8 feet of post above existing grade for mounting of sign.

E. Erect sign so that top edge of sign is at a nominal 8 feet above existing grade.

3.02 MAINTENANCE AND REMOVAL

A. Keep signs and supports clean. Repair deterioration and damage.

B. Remove signs, framing, supports, and foundations to a depth of at least 2 feet upon completion of Project. Restore area to a condition equal to or better than before construction.

END OF SECTION

PROJECT No.: (FILE NO:)	CONTRACT No.:	REVIEWED BY:

***INSTRUCTIONS TO SIGN MAKER** (LIST COMPANY NAME):

QTY.	ACTION ITEMS:
	Make new sign(s)
	Follow City standards attached
	Provide submittal (drawing) to the City for project sign showing content, layout, lettering style, lettering size, and colors

VARIABLE TEXT

Line 1	Project Name:	
Line 2	Project Amount (rounded to nearest $1000):	

ATTACHMENTS INCLUDED

QTY.	SEALS / LOGOS
	City of Houston - 24" diameter
	STANDARDS
	Standard Specification Section 01580 - Project Identification Signs
	Standard Detail 01580-02 Construction Sign

(Instructions on reverse.)

INSTRUCTIONS

Contractor produces this form. Contractor shall insert the information and provide the form to the sign maker with Contractor's purchase order.

List PROJECT No., (FILE No.), CONTRACT No., and name of City's Project Manager REVIEWED BY.

INSTRUCTIONS TO SIGN MAKER:

- Give COMPANY NAME of sign maker.
- Indicate QUANTITY of new signs to be made.
- Direction for sign maker to follow City Standards in making signs.
- Require submittals from sign maker, who provides Shop Drawing of Project sign showing content, layout, lettering style, lettering size, and colors.

VARIABLE TEXT:

- Give PROJECT NAME. Write it out in all caps and suggest line break. Lines are required.
- Give Project amount to be listed on sign. Round off to nearest $1000.

ATTACHMENTS INCLUDED:

- **Seals**

  City provides the quantity of City seals required, one for each Project sign.

- **Standards**

  Contractor provides set of Standards to sign maker, including (Specification Section 01580 - Project Identification Signs, and Standard Detail No. 01580-02 - Construction Sign.

Section 01581

EXCAVATION IN PUBLIC WAY PERMIT SIGNS

PART 1 G E N E R A L

1.01 SECTION INCLUDES

A. Project sign installation.

B. Maintenance and removal of Project sign.

1.02 SYSTEM DESCRIPTION

A. Sign Construction: Construct signs of new materials.

B. Appearance: Maintain signs to present a clean and neat look throughout the Contract duration.

C. Sign Placement: Place signs at each street entrance to street cut excavation.

1.03 SUBMITTALS

A. Submit Shop Drawings under provisions of Section 01330 - Submittal Procedures.

B. Show content, layout, lettering style, lettering size and colors. Make sign and lettering to scale, clearly indicating condensed lettering, if used.

PART 2 P R O D U C T S

2.01 SIGN LAYOUT

A. Conform to Texas Manual on Uniform Traffic Control Devices. Minimum size: 36 inches by 36 inches.

B. Lettering: Uppercase Helvetica Regular lettering.

C. Composition: Include on sign copy of street cut permit, title "City of Houston", contracting department's name, address, and emergency telephone number and Contractor's name. Project Manager will provide department name, address, and emergency telephone number for preparation of sign.

PART 3 E X E C U T I O N

3.01 INSTALLATION

A. Install Project signs before commencement of pavement excavation in Public Way.

B. Position sign so it is fully visible and readable to general public.

C. Erect sign level and plumb.

D. Erect sign so that top edge of sign is at a nominal 8 feet above existing grade.

3.02 MAINTENANCE AND REMOVAL

A. Keep signs and supports clean. Repair deterioration and damage.

B. Remove signs, framing, supports and foundations to depth of at least 2 feet upon completion of the Work. Restore area to condition equal to or better than before construction.

END OF SECTION

Section 01610

BASIC PRODUCT REQUIREMENTS

PART 1 GENERAL

1.01 SECTION INCLUDES

A. Requirements for transportation, delivery, handling, and storage of Products.

1.02 PRODUCTS

A. Products: Defined in Document 00700 – General Conditions. Does not include machinery and equipment used for preparation, fabrication, conveying and erection of the Work. Products may also include existing materials or components designated for reuse.

B. For material and equipment specifically indicated or specified to be reused in the work:

1. Use special care in removal, handling, storage and reinstallation, to assure proper function in completed work.

2. Arrange for transportation, storage and handling of products which require off-site storage, restoration or renovation. Include cost in unit price for related items.

C. When contract documents require that installation of work comply with manufacturer's printed Instructions, obtain and distribute copies of such instructions to parties involved in installation, including two copies to Project Manager. Maintain one set of complete instructions at job site during installation until completion.

D. Provide Products from the fewest number of manufacturers as practical, in order to simplify spare parts inventory and to allow for maximum interchangeability of components. For multiple components of the same size, type or application, use the same make and model of component throughout the Work.

1.03 TRANSPORTATION

A. Make arrangements for transportation, delivery, and handling of Products required for timely completion of the Work.

B. Transport and handle Products in accordance with manufacturer's instructions.

C. Consign and address shipping documents to proper party giving name of the Project and its complete street address. Shipments shall be delivered to

Contractor.

1.04 DELIVERY

A. Arrange deliveries of Products to accommodate short-term site completion schedules and in ample time to facilitate inspection prior to Installation. Avoid deliveries that cause lengthy storage or overburden of limit storage space.

B. Coordinate deliveries to avoid conflict with the Work and conditions at the site and to accommodate the following:

1. Work of other contractors or the City.

2. Limitations of storage space.

3. Availability of equipment and personnel for handling Products.

4. The City's use of premises.

C. Have Products delivered to the site in manufacturer's original, unopened, labeled containers.

D. Immediately upon delivery, inspect shipment to assure:

1. Product complies with requirements of the Contract.

2. Quantities are correct.

3. Containers and packages are intact; labels are legible.

4. Products are properly protected and undamaged.

1.05 PRODUCT HANDLING

A. Coordinate off-loading of Products delivered to the site. If necessary during construction, move and relocate stored Products at no additional cost to the City.

B. Provide equipment and personnel necessary to handle Products, including those provided by the City, by methods to prevent damage to Products or packaging.

C. Provide additional protection during handling as necessary to prevent breaking, scraping, marring, or otherwise damaging Products or surrounding areas.

D. Handle Products by methods to prevent over-bending or overstressing.

E. Lift heavy components only at designated lifting points.

F. Handle Products in accordance with manufacturer's recommendations.

G. Do not drop, roll, or skid Products off delivery vehicles. Hand-carry or use Suitable materials handling equipment.

1.06 STORAGAE OF PRODUCTS

A. Store and protect Products in accordance with manufacturer's recommendations and requirements of these Specifications.

B. Make necessary provisions for safe storage of Products. Place Products so as to prevent damage to any part of the Work or existing facilities and to maintain free access at all times to all parts of the Work and to utility service company installations in the vicinity of the Work. Keep Products neatly and compactly stored in locations that will cause minimum inconvenience to other contractors, public travel, adjoining owners, tenants, and occupants. Arrange storage in a manner so as to provide easy access for inspection.

C. Restrict storage to areas available on the site for storage of Products as shown on Drawings or approved by Project Manager.

D. Provide off-site storage and protection when on-site storage is not adequate. Provide addresses of, and access to, off-site storage locations for inspection by Project Manager.

E. Do not use lawns, grass plots, or other private property for storage purposes without written permission of owner or other person in possession or control of premises.

F. Protect stored Products against loss or damage.

G. Store in manufacturers' unopened containers.

H. Neatly, safely, and compactly stack Products delivered and stored along the line of the Work to avoid inconvenience and damage to property owners and general public, and maintain at least 3 feet clearance around fire hydrants. Keep public, private driveways and street crossings open.

I. Repair or replace damaged lawns, sidewalks, streets or other improvements to satisfaction of Project Manager. Total length that Products may be distributed along route of construction at one time is 1000 linear feet, unless otherwise approved in writing by Project Manager.

PART 2 P R O D U C T S - Not Used

PART 3 E X E C U T I O N - Not Used

END OF SECTION

Section 01630

PRODUCT SUBSTITUTION PROCEDURES

PART 1 G E N E R A L

1.01 SECTION INCLUDES

A. Options for making Product or process selections.

B. Procedures for proposing equivalent Products or processes, including pre-approved, pre-qualified, and approved Products or processes.

1.02 DEFINITIONS

A. Product: As defined in Document 00700 – General Conditions. Product does not include machinery and equipment used for production, fabrication, conveying, and erection of the Work. Products may also include existing materials or components designated for reuse.

B. Process: Any proprietary system or method for installing system components resulting in an integral, functioning part of the Work. For this Section, the word Products includes Processes.

1.03 SELECTION OPTIONS

A. Pre-approved Products: Construction products of certain manufacturers or Suppliers designated in Specifications as "pre-approved." The City maintains a list of pre-approved products. Pre-approved Products for this Project are designated as pre-approved in Specifications. Products of other manufacturers or suppliers are not acceptable for this Project and will not be considered under the submittal process for approving alternate products.

B. Pre-qualified Products: Construction products of certain manufacturers or Suppliers designated in Specifications as "pre-qualified." Pre-qualified Products for this Project are designated as pre-qualified in Specifications. Products of other manufacturers or suppliers are not acceptable for this Project and will not be considered under the submittal process for approving alternate products.

C. Approved Products: Construction products of certain manufacturers or Suppliers designated in Specifications followed by words "or approved equal." Approval of alternate products not listed in Specifications may be obtained through provisions for product options and substitutions in Document 00700 - General Conditions, and by following submittal procedures specified in

Section 01330- Submittal Procedures. The procedure for approval of alternate products is not applicable to pre-approved or pre-qualified products.

D. Product Compatibility: To the maximum extent possible, provide Products that are of the same type or function from a single manufacturer, make, or source. Where more than one choice is available, select Product that is compatible with other Products already selected, specified, or in use by the City.

1.04 CONTRACTOR'S RESPONSIBILITY

A. Responsibility related to Product options and substitutions is defined in Document 00700 - General Conditions.

B. Furnish information Project Manager deems necessary to judge equivalency of alternate Product.

C. Pay for laboratory testing, as well as any other review or examination costs, needed to establish equivalency between products in order to obtain information upon which Project Manager can base a decision.

D. If Project Manager determines alternate product is not equal to that named in Specifications, Furnish one of the specified Products.

1.05 CITY REVIEW

A. Use alternate Products only when approved in writing by Project Manager. Project Manager's determination regarding acceptance of proposed alternate Product is final.

B. Alternate Products shall be accepted if Products are judged by Project Manager to be equivalent to specified Product or to offer substantial benefit to the City.

C. The City retains the right to accept any Product deemed advantageous to the City, and similarly, to reject any product deemed not beneficial to City.

1.06 SUBSTITUTION PROCEDURE

A. Collect and assemble technical information applicable to the proposed Product to aid in determining equivalency as related to the approved Product specified.

B. Submit a written request for a construction Product to be considered as an alternate Product.

C. Submit Product information after the effective date of the Contract and within the time period allowed for substitution submittals given in Document 00700 - General Conditions. After the submittal period has expired, requests for alternate Products shall be considered only when specified Product becomes unavailable because of conditions beyond Contractor's control.

D. Submit five copies of each request for alternate Product approval. Include the following information:

1. Complete data substantiating compliance of proposed substitution with the Contract.

2. For Products:
   a. Product identification, including manufacturer's name and address.
   b. Manufacturer's literature with Product description, performance and test data, and reference standards.
   c. Samples, as applicable.
   d. Name and address of similar projects on which Product was used and date of installation. Include names of Owner, design consultant, and installing contractor.

3. For construction methods:
   a. Detailed description of proposed method.
   b. Drawings illustrating methods.

4. Itemized comparison of proposed substitution with Product or method specified.

5. Data relating to changes in Construction Schedule.

6. Relation to separate contracts, if any.

7. Accurate cost data on proposed substitution in comparison with Product or method specified.

8. Other information requested by Project Manager.

E. Approved alternate Products will be subject to the same review process as the specified Product would have been for Shop Drawings, Product Data, and Samples.

PART 2 P R O D U C T S - Not Used

PART 3 E X E C U T I O N - Not Used

END OF SECTION

Section 01725

FIELD SURVEYING

PART 1 G E N E R A L

1.01 QUALITY CONTROL

A. Conform to State of Texas laws for surveys requiring licensed surveyors. Employ a surveyor acceptable to Project Manager if required by the Contract.

1.02 MEASUREMENT AND PAYMENT

A. UNIT PRICES

1. No separate payment will be made for field surveying. Include cost in unit price for related items.

1.03 SUBMITTALS

A. Conform to requirements of Section 01330 - Submittal Procedures.

B. Submit name, address, and telephone number of Surveyor to Project Manager before starting survey work.

C. Submit documentation verifying accuracy of survey work on request.

D. Submit certificate signed by Surveyor, that elevations and locations of the Work are in conformance with the Contract.

1.04 PROJECT RECORD DOCUMENTS

A. Maintain a complete and accurate log of control and survey work as it progresses.

B. Prepare a certified survey setting forth dimensions, locations, angles, and elevations of construction and site work upon completion of foundation walls and major site improvements.

C. Submit record documents under provisions of Section 01785 - Project Record Documents.

1.05 EXAMINATION

A. Verify locations of survey control points prior to starting the Work.

B. Notify Project Manager immediately if any discrepancies are discovered.

1.06 SURVEY REFERENCE POINTS

A. The City will establish survey control datum as provided in Document 00700 - General Conditions and as indicated on Drawings. Inform Project Manager in Advance of time horizontal and vertical control points will be established so

verification deemed necessary by Project Manager may be done with minimum inconvenience to the City or Contractor.

B. Locate and protect survey control points prior to starting site work; preserve permanent reference points during construction.

C. Notify Project Manager a minimum of 48 hours before relocation of reference points is needed due to changes in grades or other reasons.

D. Promptly report loss or destruction of reference points to Project Manager.

E. Reimburse the City for cost of reestablishment of permanent reference points disturbed by construction operations.

1.07 SURVEY REQUIREMENTS

A. Utilize recognized engineering survey practices.

B. Establish a minimum of two permanent benchmarks on site, referenced to established control points. Record horizontal and vertical location data on Project record documents.

C. Establish elevations, lines and levels to provide quantities required for measurement and payment and for appropriate controls for the Work. Locate and lay out the following with appropriate instruments:

1. Site improvements including grading, fill and topsoil placement, utilities, and footings and slabs

2. Grid or axis for structures

3. Building foundation, column locations, and ground floor elevations

D. Periodically verify layouts.

PART 2 P R O D U C T S - Not Used

PART 3 E X E C U T I O N - Not Used

END OF SECTION

Section 01731

CUTTING AND PATCHING

PART 1 G E N E R A L

1.01 SECTION INCLUDES

A. Cutting, patching and fitting of the Work or work under construction. Coordinating Installation or connection of the Work to existing facilities, or uncovering work for access, inspection or testing and related submittals.

1.02 MEASUREMENT AND PAYMENT

A. UNIT PRICES

1. No separate payment will be made for cutting and patching. Include cost in unit price for related items.

1.03 CUTTING AND PATCHING

A. Perform activities to avoid interference with facility operations and work of others in accordance with Document 00700 - General Conditions of Contract.

B. Execute cutting and patching, including excavation, backfill and fitting to:

1. Remove and replace defective work or work not conforming to Drawings and Specifications;

2. Take samples of installed work as required for testing;

3. Remove construction required to provide for specified alterations or additions to existing work;

4. Uncover work to allow inspection or reinspection by Project Manager or regulatory agencies having jurisdiction;

5. Connect uninstalled work to completed work in proper sequence;

6. Remove or relocate existing utilities and pipes that obstruct work;

7. Make connections or alterations to existing or new facilities;

8. Provide openings, channels, chases and flues and cut, patch, and finish; if required; or

9. Provide protection for other portions of the Work.

C. Restore existing work to a condition equal to or better than that which existed Prior to cutting and patching, and to standards required by Specifications.

D. Support, anchor, attach, match, trim and seal materials to work of others. Unless otherwise specified, Furnish and Install sleeves, inserts, and hangers required for execution of the Work.

E. Provide shoring, bracing and support necessary to maintain structural integrity and to protect adjacent work from damage during cutting and patching. Request written approval from Project Manager, before cutting structural members such as beams, anchors, lintels, or other supports. Follow approved submittals, as applicable.

F. Match new materials to existing materials by bonding, lapping, mechanically tying, anchoring or other effective means in order to prevent cracks and to minimize evidence of patching. Conceal effects of demolition and patching by blending new construction to existing surfaces. Avoid obvious breaks, joints or changes of surface appearance unless shown on Drawings or authorized by Project Manager.

1.04 SUBMITTALS

A. Conform to requirements of Section 01330 - Submittal Procedures.

B. Submit a written request to Project Manager for consent to proceed, before conducting cutting operations that might affect structural integrity, design function, City operations, or work of another contractor.

C. Include the following in submittal:

1. Identification of Project

2. Description of affected work

3. Necessity for cutting

4. Effect on other work and on structural integrity

5. Describe the proposed work including:
   a. Scope of cutting and patching
   b. Contractor, Subcontractor or Supplier who will execute the work
   c. Proposed Products
   d. Extent of refinishing
   e. Schedule of operations

6. Alternatives to cutting and patching

D. When work conditions or schedules dictate the need for change of materials or methods, submit a written recommendation to Project Manager that includes:

1. conditions necessitating the change;

2. recommendations for alternative materials or methods; and

3. submittals required for proposed substitutions

E. Notify Project Manager in writing when work will be uncovered for observation. Do not begin cutting or patching operations until authorized by Project Manager.

1.05 CONNECTIONS TO EXISTING FACILITIES

A. Perform construction operations necessary to complete connections and tie-ins to existing facilities. Keep existing facilities in continuous operation unless otherwise permitted in the Specifications or approved in writing by Project Manager.

B. Coordinate interruption of service requiring connection to existing facilities with Project Manager. Do not bypass wastewater or sludge to waterways. Provide temporary pumping facilities to handle wastewater if necessary. Use temporary bulkheads to minimize disruption. Provide temporary power and piping to facilitate construction where necessary.

C. Submit a detailed schedule of proposed connections, including shut-downs and tie-ins. Include proposed time and date as well as anticipated duration of work. Coordinate the connection schedule with the construction schedule.

1. Submit specific times and dates to Project Manager at least 48 hours in advance of proposed work.

D. Procedures and Operations:

1. Operate existing pumps, valves and gates in required sequence under supervision of Project Manager. Do not operate valves, gates or other items of equipment without Project Manager's knowledge.

2. If possible, test equipment under operating conditions before making final tie-ins to connect equipment to existing facility.

3. Coordinate work and schedules. Notify Project Manger at least 48 Hours before shutdowns or bypasses are required.

PART 2 P R O D U C T S Not Used

PART 3 E X E C U T I O N Not Used

END OF SECTION

Section 01732

PROCEDURE FOR WATER VALVE ASSISTANCE

PART 1 G E N E R A L

1.01 SECTION INCLUDES

A. Operation of valves. City of Houston employees will operate existing valves. Contractor's employees may operate new valves included in the Project prior to acceptance by the City.

1.02 PROCEDURE

A. Perform activities listed in Exhibit A attached to this Section.

1.03 SUBMITTALS

A. Submit request for work order planning meetings in accordance with Exhibit A. Include information listed in Step 1 of Exhibit A, attached to this Section.

1.04 CANCELLATION

A. Contractor, Project Manager, or Public Utilities Division may cancel a scheduled valve assistance appointment at no extra cost or payment to Contractor. Contractor shall notify City's appointed Project Inspector ("Inspector") 24 hours in advance of cancellation. Inspector shall notify Central Operation Service (COS) immediately upon receipt of cancellation notice. Cancellation may be caused by bad weather, preparation work taking longer than anticipated, or unforeseen delays by one or more of the three parties.

PART 2 P R O D U C T S - Not Used

PART 3 E X E C U T I O N - Not Used

END OF SECTION

PAGE LEFT INTENTIONALLY BLANK

EXHIBIT A

PROCEDURE FOR VALVE ASSISTANCE

The following procedure will be used by Utility Maintenance Branch personnel when completing a service request from individual Contractors, through Inspector, for operation of existing water valves.

ROUTINE VALVE ASSISTANCE REQUEST (NON-EMERGENCY JOBS):

Step 1. a. When notified by Contractor, Inspector will schedule a work order planning meeting by calling Central Operation Service (COS) at **(713) 295-5521** and providing information shown below. The work order planning meeting shall be conducted a minimum of three days after the request; excluding weekends, holidays, inclement weather days, and the day of the call.

Location of Work (Street Intersection)	Project #
Project Description	Contractor (Company Name)
Job Superintendent's Name	Superintendent's Office #/Mobile #/Pager #
Contractor's Emergency Information	Name and Phone #/Mobile #/Pager #
Inspector/Senior Inspector	Name, Phone #/Mobile #/Pager #
Date & Time assistance is requested	

b. COS will create a work order for each wet connection, cut and plug, etc. that will be designated as a "Code 40" (Private Contractor).

c. COS will give Inspector the work order number. This work order number must be used as a reference in all communications regarding this request for Valve Assistance.

d. Valve personnel must have the work order number on their route sheet. When valve personnel arrive at the job site for the Work Order Planning Meeting between Inspector, Contractor, and Utility Maintenance valve personnel, they will verify the street intersection and work order number with the Inspector before beginning Work Order Planning Meeting.

e. During Work Order Planning Meeting, the work to be performed will be outlined and the actual date work will be performed will be mutually determined by Inspector, Contractor and City's Utility Maintenance Division valve personnel, based upon relevant factors such as preparatory work needed, customer requirements, etc.

f. Valve personnel will perform work specifically outlined in the work order requested. Also, Utility Maintenance Branch valve personnel will only operate existing water valves. Inspector must contact COS and request a new work order for additional work.

g. Valve personnel will contact the dispatcher and advise when the job is complete. Valve personnel will list all appropriate information on the Crew Activity Report.

Step 2. Should valve personnel not be able to keep an appointment to provide valve assistance, Utility Maintenance Branch will provide notification to appropriate Inspector by phone at least 24 hours prior, with that fact and rescheduling information, if available.

Step 3. Inspector will notify COS if valve personnel have not arrived at the site within 30 minutes of scheduled appointment. If Contractor is not ready when valve operator arrives to provide valve assistance, the City shall charge Contractor $50.00 per hour, starting 15 minutes after the scheduled appointment time, minimum one hour charge.

Step 4. Contractor will not be due delay claims or downtime if Utility Maintenance Branch has notified Inspector that they will not be able to provide valve assistance as scheduled.

Step 5. Test installed new valves in the presence of Inspector before substantial completion inspection is scheduled. Place new valves in open position on or before the Date of Substantial Completion.

Step 6. Project Manager will notify, in writing, Utility Maintenance Branch two months before the warranty expires to report any problems they have with new water lines. Project Manager will notify Contractor about these problems.

EMERGENCY REQUEST FOR VALVE ASSISTANCE PROCEDURE:

Step 1. When notified by Contractor, Inspector will request emergency Valve Assistance due to a broken line/service, etc. by calling COS at **(713) 295-5521** and providing the following information:

Location of Work (Street Intersection)	Project #
Project Description	Superintendent's Office #/Mobile #/Pager #
Contractor (Company Name)	Name and Phone #/Mobile #/Pager #
Job Superintendent's Name	Name, Phone #/Mobile #/Pager #
Contractor's Emergency Information	
Inspector/Senior Inspector	
Date & Time assistance is requested	

Step 2. COS will create an emergency work order number and describe the work to be performed.

Step 3. COS will give Inspector the emergency work order number. Reference work order number in all communications regarding request for Valve Assistance.

Step 4. COS will contact designated valve personnel and assign emergency work order. Dispatcher will follow standard COS procedures if this situation occurs after normal working hours.

Step 5. Valve personnel must have the emergency work order number on the route sheet. When valve personnel arrive at the job site for emergency work, they will verify the street intersection and emergency work order number with Inspector prior to beginning work requested for operating existing water valves. Valve personnel will coordinate verification of street intersection and work order number with Inspector prior to performing work.

Section 01740

SITE RESTORATION

PART 1 G E N E R A L

1.01 SECTION INCLUDES

A. Restoration of site affected by the Work in public or private property, including pavement, esplanades, sidewalks, driveways, fences, lawns and landscaping.

1.02 MEASUREMENT AND PAYMENT

A. Unit Prices.

1. Payment for restoration of Project site disturbed by utility construction operations is on a linear foot basis. Measurement will be as provided for corresponding utility in each Specification section. No separate payment made for branch pipe, valves and, other associated work for utilities. Measurement for restoration with multiple utilities within the same right-of-way will be on a linear foot basis for only one utility.

2. No separate payment made for facility or roadway projects. Include cost in the surface improvements associated with the facility or roadway construction.

3. Payment includes required site restoration within the right-of-way or easement regardless of size or type of pipe, method of construction, paved or unpaved areas or thickness and width of pavement.

4. No separate payment made for site restoration for service connections under this Section. Include cost in appropriate utility section.

5. Refer to Section 01270 – Measurement and Payment for Unit Price procedures.

B. Stipulated Price (Lump Sum) Contracts. If Contract is Stipulated Price Contract, include payment for work under this section in total Stipulated Price.

1.03 DEFINITIONS

A. Phase: Locations identified on the plans and listed in Section 1110 – Summary of Work under Work Sequence.

B. Site Restoration: Replacement or reconstruction of Site Improvements located in rights-of-way, easements, public property, and private property affected or altered by the Work.

C. Site Improvement: Includes pavement, curbs and gutters, esplanades, sidewalks, driveways, fences, lawns, irrigation systems, landscaping, and other improvements in existence at the Project site before commencement of construction operations.

1.04 SUBMITTALS

A. Conform to requirements of Section 01330 - Submittal Procedures.

B. Schedule of testing, service connections, abandonment, backfill, and site restoration.

C. Sample of notices to residents outlining their responsibility for maintenance of site improvements adjacent to the Project that are not disturbed by construction operations

1.05 SCHEDULING

A. Schedule testing, service connections, abandonment, backfill and site restoration immediately following completion of pipe laying work or paving within each block or line segment.

B. Phased Construction:

1. Commencement of subsequent Phase will follow scheduling of site restoration of prior Phase. Limit work to a maximum of two Phases of the project.

C. Construction of Projects with no Phases listed in Section 01110- Summary of Work:

1. Complete site restoration prior to disturbing over 50% of total project linear feet or 2,000 linear feet, whichever is greater, of right-of-way or easement.

2. Limit work to a maximum of 50% of total project linear feet or 2,000 linear feet, whichever is greater, of right-of-way and easement. Commence work in additional right-of-way or easement after completion of site restoration.

PART 2 PRODUCTS

2.01 MATERIALS

A. Pavement, Sidewalks and Driveways: Materials specified in Section 02951 - Pavement Repair and Resurfacing.

B. Seeding and Sodding: Sod specified in Section 02922 - Sodding and Seed specified in Section 02921 - Hydromulch Seeding.

C. Trees, Shrubs and Plantings: Conform to requirements of Section 01562 – Tree and Plant Protection.

PART 3 EXECUTION

3.01 Preparatory Work

A. Provide cleanup and restoration crews to work closely behind pipe laying and roadway construction crews, and where necessary, during testing, service restoration, abandonment, backfill and surface restoration.

B. Water Lines: Unless otherwise approved by Project Manager, comply with the following:

1. Once Project Manager approves work within a Phase, immediately begin preparatory work for disinfection effort.

2. No later than three days after completing disinfection preparatory work, submit to City appropriate request for disinfection.

3. If City fails to perform initial disinfection of lines in accordance with Section 2514 - Disinfection of Water Lines, within seven days from submission of appropriate request, and if approved by Project Manager, pipe laying operations may continue beyond approved limits until the City responds.

4. Immediately after transfer of services, begin abandonment of old water lines and site restoration.

C. Wastewater Lines:

1. Once Project Manager approves work within a Line Segment, immediately begin preparatory work for testing effort.

2. No later than three days after completing preparatory work for testing, initiate testing work.

3. Immediately after transfer of service connections, begin abandonment of old wastewater lines, and site restoration.

D. Street Construction and Paving Projects

1. Once Project Manager approves work within a Line Segment or block, immediately begin preparatory work for testing effort.

2. No later than three days after completing preparatory work for testing, initiate testing work.

3. Immediately after testing begin site restoration.

E. Street Construction and Paving Projects

1. Once Project Manager approves work within a block, immediately begin preparatory work for sidewalk construction, sodding and hydromulching and tree planting.

2. No later than seven days after completing preparatory work, initiate construction.

3.02 CLEANING

A. Remove debris and trash to maintain a clean and orderly site in accordance with requirements of General Conditions and Section 01576 - Waste Material Disposal.

3.03 LANDSCAPING AND FENCES

A. Seeding and Sodding.

1. Remove construction debris and level area with bank sand so that new grass surface matches level of existing grass and maintains pre-construction drainage patterns. Level and fill minor ruts or depressions caused by construction operations with bank sand, where grass is still viable.

2. Restore previously existing turfed areas with sod and fertilize in accordance with Section 02922 - Sodding. Sod to match existing turf.

3. Restore unpaved areas not requiring sodding with hydromulch seeding conforming to Section 02921 - Hydromulch Seeding.

B. Trees, Shrubbery and Plants.

1. Remove and replant trees, shrubs, and plants in accordance with requirements of Section 01562 – Tree and Plant Protection.

C. Fence Replacement.

1. Replace removed or damaged fencing to equal or better condition than existed prior to construction, including concrete footings and mow strips. Provide new wood posts, top and bottom railing and panels. Metal fencing material, not damaged by the Work, may be reused.

2. Remove and dispose of damaged or substandard material.

3.04 MAINTENANCE

A. Maintain shrubs, plantings, sodded areas and seeded areas.

B. Replace shrubs, plantings and seeded or sodded areas that fail to become established.

C. Refer to Section 01562 - Tree and Plant Protection, Section 02921 - Hydromulch Seeding and Section 02922 - Sodding for maintenance requirements.

END OF SECTION

Section 01755

STARTING SYSTEMS

PART 1 G E N E R A L

1.01 SECTION INCLUDES

A. Starting systems.

B. Demonstration and instructions.

C. Testing, adjusting and balancing.

PART 2 P R O D U C T S - Not Used

PART 3 E X E C U T I O N

3.01 PREPARATION

A. Coordinate schedule for start-up of various equipment and systems.

B. Notify Project Manager seven days prior to startup of each item.

C. Verify each piece of equipment or system has been checked for proper lubrication, drive rotation, belt tension, control sequence, or other damage-causing conditions.

D. Verify tests, meter readings, and specified electrical characteristics agree with those required by equipment or system manufacturer.

E. Verify wiring and support components for equipment are complete and tested.

F. Execute start-up under supervision in accordance with manufacturer's instructions.

G. When specified in individual Specification sections, require manufacturer to provide an authorized representative to be present at the site to inspect, check and approve equipment or system installation prior to start-up, and to supervise placing equipment or system in operation.

H. Submit written report indicating that equipment or system has been properly installed and is functioning correctly.

3.02 DEMONSTRATION AND INSTRUCTIONS

A. Demonstrate operation and maintenance of Products to Project Manager two weeks prior to Date of Substantial Completion.

B. Utilize O&M Manuals as the basis for instruction. Review contents of manual with Project Manager in detail to explain aspects of operation and maintenance.

C. Demonstrate start-up, operation, control, adjustment, trouble-shooting, servicing, maintenance, and shutdown of each item of equipment at agreed-upon times, at the equipment location.

D. Prepare and insert additional data in O&M Manuals when the need for additional data becomes apparent during instruction.

E. At a minimum, Contractor will demonstrate the following:

1. Products and procedures to be used in maintaining various surfaces, e.g., counter tops, toilet partitions, tile floors and carpeting;

2. procedures to set and maintain landscape irrigation system;

3. procedures to set and maintain security and fire alarm systems; and

4. procedures to set and maintain HVAC systems.

3.03 TESTING, ADJUSTING AND BALANCING

A. Contractor shall appoint, employ and pay for the services of an independent firm to perform testing, adjusting and balancing.

B. Submit reports by the independent firm to Project Manager describing observations and results of tests and signifying compliance or non-compliance with specified requirements and requirements of the Contract.

END OF SECTION

Section 01770

CLOSEOUT PROCEDURES

PART 1 G E N E R A L

1.01 SECTION INCLUDES

A. Procedures to establish Date of Substantial Completion.

B. Closeout procedures for final submittals, O&M data, warranties, spare parts and maintenance materials.

C. Texas Department of Licensing and Regulation (TDLR) inspection for Texas Accessibility Standards (TAS) compliance.

1.02 SUBSTANTIAL COMPLETION

A. Comply with Document 00700 - General Conditions regarding Date of Substantial Completion when Contractor considers the Work, or portion thereof designated by Project Manager, to be substantially complete.

B. Insure the following items have been completed when included in the Work, prior to presenting a list of items to be inspected by Project Manager for issuance of a Certificate of Substantial Completion:

1. cutting, plugging, and abandoning of water, wastewater, and storm sewer lines, as required by Contract documents for each item;

2. construction of, and repairs to, pavement, driveways, sidewalks, and curbs and gutters;

3. sodding and hydromulch seeding, unless waived by Project Manager in writing;

4. general clean up including pavement markings, transfer of services, successful testing and landscape;

5. additional requirements contained in Section 01110 - Summary of Work.

C. Assist Project Manager with inspection of Contractor's list of items and complete or correct the items, including items added by Project Manager, within specified time period.

D. Should Project Manager's inspection show failure of Contractor to comply with requirements to obtain Date of Substantial Completion, including those items in Paragraph 1.02 B. of this section, Contractor shall complete or correct the items, before requesting another inspection by Project Manager.

1.03 CLOSEOUT PROCEDURES

A. Comply with Document 00700 - General Conditions regarding final completion and final payment when the Work is complete and ready for Project Manager's final inspection.

B. Provide Project Record Documents in accordance with Section 01785 - Project Record Documents.

C. Complete or correct items on punch list, with no new items added. Address new items during warranty period.

D. The City will occupy portions of the Work as specified in other sections.

1.04 FINAL CLEANING

A. Execute final cleaning prior to final inspection.

B. For facilities, clean interior and exterior glass and surfaces exposed to view; remove temporary labels, stains and foreign substances, polish transparent and glossy surfaces, vacuum carpeted and soft surfaces.

C. Clean equipment and fixtures to sanitary condition.

D. Clean or replace filters of operating equipment.

E. Clean debris from roofs, gutters, down spouts, and drainage systems.

F. Clean site; sweep paved areas, and rake clean landscaped surfaces.

G. Remove waste and surplus materials, rubbish, and temporary construction facilities from site following final test of utilities and completion of the Work.

1.05 ADJUSTING

A. Adjust operating equipment to ensure smooth and unhindered operation. Value of this testing and adjusting is five percent of Lump Sum Price in the Schedule of Values for item being tested.

1.06 OPERATION AND MAINTENANCE DATA

A. Submit O&M data as noted in Section 01330 - Submittal Procedures.

B. Five percent of lump sum amount of each piece of equipment as indicated in Schedule of Unit Price Work or Schedule of Values will be paid after the required O&M data submittals are received and approved by Project Manager.

1.07 WARRANTIES

A. Provide one original of each warranty from Subcontractors, Suppliers, and manufacturers.

B. Provide Table of Contents and assemble warranties in a 3-ring/D binder with durable plastic cover.

C. Submit warranties prior to final progress payment.

D. Warranties shall commence in accordance with the requirements in Document 00700 - General Conditions.

1.08 SPARE PARTS AND MAINTENANCE MATERIALS

A. Provide Products, spare parts, maintenance and extra materials in quantities specified in individual Specification sections.

B. Deliver to a location within the City limits as directed by Project Manager. Applicable items must be delivered prior to issuance of a final Certificate for Payment.

PART 2 P R O D U C T S - Not Used

PART 3 E X E C U T I O N - Not Used

END OF SECTION

Section 01782

OPERATIONS AND MAINTENANCE DATA

PART 1 G E N E R A L

1.01 SECTION INCLUDES

A. Submittal requirements for equipment and facility Operations and Maintenance (O&M) Manuals

1.02 MEASUREMENT AND PAYMENT

A. Measurement for equipment O&M Manuals is on a lump sum basis equal to five percent of the individual equipment value contained in Schedule of Unit Prices or Schedule of Values. The lump sum amount may be included in the first Progress Payment following approval of the O&M Manuals by Project Manager.

1.03 SUBMITTALS

A. Conform to requirements of Section 01330 - Submittal Procedures. Submit a list of O&M Manuals and parts manuals for equipment to be incorporated into the Work.

B. Submit documents with 8-1/2 x 11-inch text pages, bound in 3-ring/D binders with durable plastic covers.

C. Print "OPERATION AND MAINTENANCE INSTRUCTIONS", Project name, and subject matter of binder on covers when multiple binders are required.

D. Subdivide contents with permanent page dividers, logically organized according to the Table of Contents, with tab titling clearly printed under reinforced laminated plastic tabs.

E. O&M Manual contents: Prepare a Table of Contents for each volume, with each Product or system description identified.

1. Part 1 - Directory: Listing of names, addresses, and telephone numbers of Design Consultant, Contractor, Subcontractors, and major equipment Suppliers.

2. Part 2 - O&M instructions arranged by system. For each category, identify names, addresses, and telephone numbers of Subcontractors and Suppliers and include the following:
   a. Significant design criteria.
   b. List of equipment.
   c. Parts list for each component.
   d. Operating instructions.
   e. Maintenance instructions for equipment and systems.
   f. Maintenance instructions for special finishes, including recommended cleaning methods and materials and special precautions identifying detrimental agents.

3. Part 3 - Project documents and certificates including:
   a. Shop Drawings and relevant data.
   b. Air and water balance reports.
   c. Certificates.
   d. Photocopies of warranties.

F. Submit two copies of O&M Manuals and parts manuals, for review, within one month prior to placing the equipment or facility in service.

G. Submit one copy of completed volumes in final form 10 days prior to final inspection. One copy with Project Manager comments will be returned after final inspection. Revise content of documents based on Project Manager's comments prior to final submittal.

H. Revise and resubmit three final volumes within 10 days after final inspection.

1.04 EQUIPMENT O&M DATA

A. Furnish O&M Manuals, prepared by manufacturers for all equipment. Manuals must contain, as a minimum, the following:

1. Equipment functions, normal operating characteristics, and limiting conditions.

2. Assembly, Installation, alignment, adjustment, and checking instructions.

3. Operating instructions for start-up, normal operation, regulation and control, normal shutdown, and emergency shutdown.

4. Detailed drawings showing the location of each maintainable part and lubrication point with detailed instructions on disassembly and reassembly of the equipment.

5. Troubleshooting guide.

6. Spare parts list, predicted life of parts subject to wear, lists of spare parts recommended to be on hand for both initial start-up and for normal operating inventory, and local or nearest source of spare parts availability.

7. Outline, cross-section, and assembly drawings with engineering data and wiring diagrams.

8. Test data and performance curves.

B. Furnish parts manuals for all equipment, prepared by the equipment manufacturer, which contain, as a minimum, the following:

1. Detailed drawings giving the location of each maintainable part.

2. Spare parts list with predicted life of parts subject to wear, lists of spare parts recommended on hand for both initial start-up and for normal operating inventory, and local or nearest source of spare parts availability.

PART 2 P R O D U C T S - Not Used

PART 3 E X E C U T I O N - Not Used

END OF SECTION

Section 01785

PROJECT RECORD DOCUMENTS

PART 1 G E N E R A L

1.01 SECTION INCLUDES

A. Maintenance and submittal of record documents and Samples.

1.02 MAINTENANCE OF DOCUMENTS AND SAMPLES

A. Maintain one record copy of documents at the site in accordance with Document 00700 - General Conditions.

B. Store record documents and Samples in field office, if a field office is required by the Contract, or in a secure location. Provide files, racks, and secure storage for record documents and Samples.

C. Label each document "PROJECT RECORD" in neat, large, printed letters.

D. Maintain record documents in a clean, dry, and legible condition. Do not use record documents for construction purposes. Do not use permit drawings to record Modifications to the Work.

E. Keep record documents and Samples available for inspection by Project Manager.

F. Bring record documents to progress review meetings for viewing by Project Manager and, if applicable, Design Consultant.

1.03 RECORDING

A. Record information legibly with red ink pen on a set of blueline opaque drawings, concurrently with construction progress. Maintain an instrument on site at all times for measuring elevations accurately. Do not conceal work until required information is recorded

B. Contract Drawings and Shop Drawings: Mark each item to record completed Modifications, or when minor deviations exist, the actual construction including:

1. Measured depths of elements of foundation in relation to finish first floor datum.
2. Measured horizontal locations and elevations of Underground Facilities and appurtenances, referenced to permanent surface improvements.

3. Elevations of Underground Facilities referenced to City of Houston benchmark utilized for the Work.

4. Measured locations of internal utilities and appurtenances concealed in construction, referenced to visible and accessible features of the Work.

5. Dimensions and details of field changes

6. Changes made by Modifications.

7. Details not on original Drawings.

8. References to related Shop Drawings and Modifications.

C. Survey all joints of water mains at the time of construction. Record on Drawings, water main invert elevation, elevation top of manway, and centerline horizontal location relative to baseline.

D. For large diameter water mains, mark specifications and addenda to record:

1. Manufacturer, trade name, catalog number and Supplier of each Product actually Installed.

2. Changes made by Modification or field order.

3. Other matters not originally specified.

E. Annotate Shop Drawings to record changes made after review.

1.04 SUBMITTALS

A. At closeout of the Contract, deliver Project record documents to Project Manager.

PART 2 P R O D U C T S - Not Used

PART 3 E X E C U T I O N - Not Used

END OF SECTION

SUPPLEMENTARY SPECIFICATIONS
Section 02775 (S)

CONCRETE SIDEWALKS (TRUNCATED DOMES)

The following supplement adds to Specification Section 02751. Where a portion of the Specifications is modified or deleted by this Supplementary Specification, the unaltered portions of the Specification shall remain in effect.

Add Paragraphs 1.02.A, No 5:

1.02 MEASUREMENT AND PAYMENT

A. Unit Prices

5. Truncated domes will be incidental to curb ramps.

END OF SUPPLEMENT

Approved by:

Mark A. McClure, P.E.
Managing Engineer
Engineering Branch
Engineering and Construction Division
Department of Public Works and Engineering

11/26/07
Date

Section 02775

CONCRETE SIDEWALKS

PART 1 GENERAL

1.01 SECTION INCLUDES

A. Reinforced concrete sidewalks.

B. Wheelchair ramps.

C. Reinforced slope paving.

1.02 MEASUREMENT AND PAYMENT

A. Unit Prices.

1. Payment for concrete sidewalks is on square foot basis.

2. No payment will be made for work outside these limits or in areas where driveway has been removed or replaced for Contractor's convenience.

3. Payment for wheelchair ramps of each type specified is on square foot basis. Removal and replacement of existing sidewalk, curb or curb and gutter and saw-cutting is paid by unit cost for each item. Sodding will be paid one foot on each side of sidewalk unless otherwise noted. Staining of wheelchair ramps is included in cost of ramp.

4. Refer to Section 01270 - Measurement and Payment for unit price procedures.

B. Stipulated Price (Lump Sum). If Contract is Stipulated Price Contract, payment for work in this Section is included in total Stipulated Price.

1.03 REFERENCES

A. ASTM C 31 - Standard Practice for Making and Curing Concrete Test Specimens in Field.

B. ASTM C 39 - Standard Test Method for Compressive Strength of Cylindrical Concrete Specimens.

C. ASTM C 42 - Test Method for Obtaining and Testing Drilled Cores and Sawed Beams of Concrete.

D. ASTM C 138 - Standard Test Method for Unit Weight, Yield, and Air Content (Gravimetric) of Concrete.

E. ASTM C 143 - Standard Test Method for Slump of Hydraulic Cement Concrete.

F. ASTM C 172 - Standard Practice for Sampling Freshly Mixed Concrete.

G. ASTM D 698 - Standard Test Methods for Laboratory Compaction Characteristics of Soil Using Standard Effort (12,400 ft-lbf/ft^3 (600 kN-m/m^3).

H. Texas Accessibility Standards of Architectural Barriers Act, Article 9102, Texas Civil Statues.

1.04 SUBMITTALS

A. Conform to requirements of Section 01330 - Submittal Procedures.

B. Submit certified testing results and certificates of compliance.

PART 2 P R O D U C T S

2.01 MATERIALS

A. Concrete: Conform to material and proportion requirements for concrete of Section 02751 - Concrete Paving.

B. Reinforcing Steel: Conform to material requirements of Section 02751 - Concrete Paving for reinforcing steel. Use No. 3 reinforcing bars.

C. Preformed Expansion Joint Material: Conform to material requirements for preformed expansion joint material of Section 02752 - Concrete Pavement Joints.

D. Expansion Joint Filler: Conform to material requirements for expansion joint material of Section 02752 - Concrete Pavement Joints.

E. Forms: Use straight, unwarped wood or metal forms with nominal depth equal to or greater than proposed sidewalk thickness. The use of 2 inch by 4 inch lumber as forms will not be allowed.

F. Sand Bed: Conform to material requirements for bank run sand of Section 02320 - Utility Backfill Materials.

G. Sodding: Conform to material requirements for sodding of Section 02922 - Sodding.

H. Coloring for wheelchair ramps: Conform to material requirements for colored concrete of Section 02761 - Colored Concrete for Medians and Sidewalks. Color shall be Brick Red or as shown on the drawings.

PART 3 EXECUTION

3.01 REPLACEMENT

A. Replace sidewalks and slope paving which are removed or damaged during construction with thickness and width equivalent to one removed or damaged, unless otherwise shown on Drawings. Finish surface (exposed aggregate, brick pavers, etc.) to match existing sidewalk.

B. Provide replaced and new sidewalks with wheelchair ramps when sidewalk intersects curb at street or driveway.

3.02 PREPARATION

A. Identify and protect utilities which are to remain.

B. Protect living trees, other plant growth, and features designated to remain.

C. Conduct clearing and grubbing operations in accordance with Section 02233 - Clearing and Grubbing.

D. Excavate subgrade 6 inches beyond outside lines of sidewalk. Shape to line, grade and cross section. For soils with plasticity index above 40 percent, stabilize soil with lime in accordance with Section 02336 – Lime-Stabilized Subgrade. Compact subgrade to minimum of 90 percent maximum dry density at optimum to 3 percent above optimum moisture content, as determined by ASTM D 698.

E. Immediately after subgrade is prepared, cover with compacted sand bed to depth as shown on Drawings. Lay concrete when sand is moist but not saturated.

3.03 PLACEMENT

A. Setting Forms: Straight, unwarped wood or metal forms with nominal depth equal to or greater than proposed sidewalk thickness. Use of 2 by 4's as forms will not be allowed. Securely stake forms to line and grade. Maintain position during concrete placement.

B. Reinforcement:

1. Install reinforcing bars.

2. Install reinforcing steel as shown on the drawings. Lay longitudinal bars in walk

continuously, except through expansion joints.

3. Use sufficient number of chairs to support reinforcement in manner to maintain reinforcement in center of slab vertically during placement.

4. Drill dowels into existing paving, sidewalk and driveways, secure with epoxy, and provide headers as required.

5. Use sufficient number of chairs for steel reinforcement bars to maintain position of bars within allowable tolerances. Place reinforcement as shown on Drawings. In plane of steel parallel to nearest surface of concrete, bars shall not vary from plan placement by more than 1/12 of spacing between bars. In plane of steel perpendicular to nearest surface of concrete, bars shall not vary from plan placement by more than 1/4 inch.

C. Expansion Joints: Install expansion joints with load transfer units in accordance with Section 02752 - Concrete Pavement Joints.

E. Place concrete in forms to specified depth and tamp thoroughly with "jitterbug" tamp, or other acceptable method. Bring mortar to surface.

F. Strike off to smooth finish with wood strike board. Finish smoothly with wood hand float. Brush across sidewalk lightly with fine-haired brush.

G. Apply coating to wheelchair ramp with contrasting color in accordance with Section 02761 - Colored Concrete for Medians and Sidewalks.

H. Unless otherwise indicated on Drawings, mark off sidewalk joints 1/8 inch deep, at spacing equal to width of walk. Use joint tool equal in width to edging tool.

I. Finish edges with tool having 1/4 inch radius.

J. After concrete has set sufficiently, refill space along sides of sidewalk to one-inch from top of walk with suitable material. Tamp until firm and solid, place sod as applicable. Dispose of excess material in accordance with Section 01576 - Waste Material Disposal. Repair driveways and parking lots damaged by sidewalk excavation in accordance with Section 02951 - Pavement Repair and Resurfacing.

3.04 CURING

A. Conform to requirements of Section 02753 - Concrete Pavement Curing.

3.05 FIELD QUALITY CONTROL

A. Testing will be performed under provisions of Section 01454 - Testing Laboratory Services.

B. Compressive Strength Test Specimens: Four test specimens for compressive strength test will be made in accordance with ASTM C 31 for each 30 cubic yards or less of sidewalk that is placed in one day. Two specimens will be tested at 7 days. Remaining two specimens will be tested at 28 days. Specimens will be tested in accordance with ASTM C 39. Minimum compressive strength: 2500 psi at 7 days and 3000 psi at 28 days.

C. Yield test for cement content per cubic yard of concrete will be made in accordance with ASTM C 138. When cement content is found to be less than that specified per cubic yard, reduce batch weights until amount of cement per cubic yard of concrete conforms to requirements.

D. If the Contractor places concrete without notifying the laboratory, the City will have the concrete tested by means of core test as specified in ASTM C 42. When concrete does not meet specification, cost of test will be deducted from payment.

E. Sampling of fresh concrete shall be in accordance with ASTM C 172.

F. Take slump tests when cylinders are made and when concrete slump appears excessive.

G. Concrete shall be acceptable when average of two 28 day compression tests is equal to or greater than minimum 28 day strength specified.

H. If either of two tests on field samples is less than average of two tests by more than 10 percent, that entire test shall be considered erratic and not indicative of concrete strength. Core samples will be required of in-place concrete in question.

I. If 28 day laboratory test indicates that concrete of low strength has been placed, test concrete in question by taking cores as directed by Project Manager. Take and test at least three representative cores as specified in ASTM C 42 and deduct cost from payment due.

3.06 NONCONFORMING CONCRETE

A. Remove and replace areas that fail compressive strength tests, with concrete of thickness shown on Drawings.

B. Replace nonconforming sections at no additional cost to City.

3.07 PROTECTION

A. Maintain newly place concrete in good condition until completion of Work.

B. Replace damaged areas.

END OF SECTION

Section 02821

CHAIN LINK FENCES AND GATES

PART 1 G E N E R A L

1.01 SECTION INCLUDES

A. Fence framework, fabric, and accessories.

B. Excavation for post bases, concrete foundation for posts and center drop for gates.

C. Manual gates and related hardware.

1.02 MEASUREMENT AND PAYMENT

A. Unit Prices.

1. Payment for fencing shall be on a linear foot basis for height noted.

2. Payment for gates shall be per unit.

3. Refer to Section 01270 - Measurement and Payment.

B. Stipulated Price (Lump Sum). If the Contract is a Stipulated Price Contract, payment for work in this Section is included in the total Stipulated Price.

1.03 REFERENCES

A. ANSI/ASTM A 123 - Zinc (Hot Dip Galvanized) Coatings on Iron and Steel Products.

B. ANSI/ASTM F 567 - Installation of Chain-Link Fence.

C. ASTM A 116 - Zinc-Coated (Galvanized) Steel Woven Wire Fence Fabric.

D. ASTM A 120 - Pipe, Steel, Black and Hot-Dipped Zinc Coated (Galvanized) Welded and Seamless, for Ordinary Uses.

E. ASTM A 153 - Zinc Coating (Hot-Dip) on Iron and Steel Hardware.

F. ASTM A 392 - Zinc-Coated Steel Chain-Link Fence Fabric.

G. ASTM A 428 - Weight of Coating on Aluminum-Coated Iron or Steel Articles.

H. ASTM C 94 - Ready-mixed Concrete.

I. ASTM F 573 - Residential Zinc-Coated Steel Chain Link Fence Fabric.

J. ASTM F 668 - Poly (Vinyl Chloride) (PVC) Coated Steel Chain Link Fence Fabric.

K. Chain Link Fence Manufacturers Institute (CLFMI) - Product Manual.

L. FS RR-F-191 - Fencing, Wire and Post Metal (and Gates, Chain Link Fence Fabric, and Accessories).

1.04 SYSTEM DESCRIPTION

A. Fence height shall be as indicated on Drawings or as noted to match height of existing.

B. Line post spacing shall not exceed 10 feet, or as shown on Drawings.

1.05 SUBMITTALS

A. Submit following Section 01330 - Submittal Procedures.

B. Shop Drawings: Indicate plan layout, spacing of components, post foundation dimensions, hardware anchorage, and schedule of components.

C. Product Data: Provide data on fabric, posts, accessories, fittings, and hardware that indicates items match or exceed the quality of existing items.

1.06 QUALIFICATIONS

A. Manufacturer: Company specializing in manufacturing the products specified in this Section with minimum 3 years experience.

1.07 FIELD MEASUREMENTS

A. Verify that field measurements are as indicated on shop drawings.

PART 2 P R O D U C T S

2.01 GALVANIZED FENCING

A. Fence fabric shall be No. 9 steel wire, hot galvanized after weaving, to match or exceed existing fence fabric.

B. Framework shall be hot-dipped galvanized with a minimum coating of 2 ounces per square foot, or one ounce per square foot plus 30 micrograms per square inch of chromate conversion coating.

C. Line posts shall conform to ASTM A 570 Grade 45 steel or ASTM A 569, cold rolled steel.

D. End corner, angle, and pull posts shall conform to ASTM A 570 Grade 45 steel or ASTM A 569 for steel pipe.

E. Top rails shall be 1.65 x 1.25-inch formed C-section; or 1.6-inch round ASTM A 569, 1.35 pounds per foot; or 1-5/8-inch outside diameter steel pipe, 2.27 pounds per foot. Top rails shall pass through openings provided for that purpose in post tops.

F. Fabric ties shall be hog rings, galvanized steel wire not less than 9 gauge with a zinc coating of not less than 1.2 ounces per square foot.

G. Bolts and nuts shall be in conformance with ASTM A 307 and shall be galvanized in accordance with AASHTO M 232.

H. Install horizontal braces fabricated of 1-5/8-inch, 2.27-pound copper bearing steel pipe at all corner, gate, and end posts.

I. Gates shall be either swing or slide, as shown on the Drawings. Swing gates shall be hinged to swing 90 degrees or 180 degrees from closed to opened. Slide gates shall be roller type with no vertical obstructions. All gate leaves shall have intermediate members and diagonal stress rods as required for rigid construction and shall be free from sag or twist. All gates shall be fitted with vertical extension arms or shall have frame end number extended to carry barbed wire. Gate posts for gates shall be 4-inch, 9.1-pound pipe. Gate frames shall be made of 2-inch outside diameter, castings. Fabric shall be the same as for the fence. Gates shall have malleable iron ball and socket hinges, catches, and stops.

J. Provide padlocks with 2 keys each for each gate. Locks for multiple gates at a single location will be keyed alike. Posts for single gates shall be the same as end posts.

PART 3 EXECUTION

3.01 INSTALLATION

A. Install chain link fence in accordance with the directions of the manufacturer and these Specifications.

B. Install fence posts at not more than 10-foot centers and at least 36 inches into the ground in a Class B concrete base. Allow concrete to cure for at least 7 days before erecting remainder of fence. Fasten fabric to line posts with wire ties spaced about 14 inches apart and to top rail spaced about 24 inches apart.

C. Use standard chain link fence stretching equipment to stretch the fabric before tying it to the rails and posts. Repeat the stretching and tying operations every 100 feet or less.

D. Erect gates so they swing or slide in the appropriate direction. Provide gate stops. Secure hardware, adjust, and leave in perfect working order. Adjust hinges and diagonal bracing so gates will hang level. Adjust rollers and guides of sliding gates so gates are level.

E. At small natural or drainage ditches where it is not practical for fence to conform to contour of the ground, span the opening below the fence with wire fastened to stakes of required length. The finished fence shall be plumb, taut, true to line and ground contour. When directed, stake down the chain link fence at several points between posts.

F. For the existing fence to be removed as shown on the drawing, contractor shall remove and properly dispose of the existing fence. Contractor shall remove existing fence between support poles including the removal of existing gates. The removal of existing fence and gates is incidental, no separate pay.

G. Where new fence joins an existing fence:
   1. When the new fence is an extension of the existing fence, set a corner post a distance of 6 inches maximum adjacent to the existing fence post, and brace post at the junction as specified in details.
   2. If the connection is made perpendicular to the existing fence other than the existing fence post, set a corner post a distance of 6 inches maximum adjacent to the existing fence, and brace the new corner post as specified in details..

END OF SECTION

SECTION 02893

TRAFFIC SIGNAL CONSTRUCTION

PART 1 GENERAL

1.01 SECTION INCLUDES

A. This specification consists of the requirements to construct traffic signals in the City of Houston.

1.02 UNIT PRICES

A. Unit Prices
Items discussed in this specification shall be measured separately from the unit price items identified in Document 00410 – Schedule or Unit Price Work. Items and work processes discussed in this section are incidental to furnishing and installing a functioning traffic signal.

No separate payment shall be made for Traffic Signal Construction under this Section. Payment will be included under various unit price items included in Document 00410 – Schedule of Unit Price Work.

1. Measurement and payment of traffic signal items shall be per each unit furnished and installed complete and in place with all appurtenances.
2. Payment for traffic control devices will be on the basis of each device installed as shown on the drawings or as directed by the City Engineer and/or the approved City of Houston Representative.
3. Refer to Section 01270 – Measurement and Payment for unit price procedures.

B. Stipulated Price per Intersection (Lump Sum)
If the Contract is a Stipulated Price Contract, payment for work in this Section is included in the total Stipulated Price.

1.03 SPECIAL REQUIREMENTS

The requirements of this contract encompass the construction of new traffic signal installations either installed 1.) concurrent with the street or roadway improvement phases of the work so that the signals will be in operation at the time the intersection is open to traffic, or 2.) as traffic signal or traffic signal related improvements.

The purpose and intent of this specification is for the Contractor to furnish all labor, materials, tools, equipment, tests, adjustments and all other incidentals necessary to install and/or modify a traffic signal system. The Contractor shall also install items furnished by the City of Houston, specified herein. All materials and equipment

furnished for installation under this contract shall be new and unused, unless otherwise specified. Contractor shall furnish and install or install materials as specified herein.

All bidders shall visit the job site prior to bidding in order to acquaint themselves with all job site conditions and problems, if any, and all other factors that may affect the bid on all project specific contracts. On work order type projects, all bidders shall thoroughly familiarize themselves with City of Houston requirements and general field conditions. Any discrepancy between drawings and specifications shall be resolved prior to bidding.

These specifications together with the reference Drawings and Contract Documents require the furnishings of all superintendence, labor, tools, equipment and apparatus necessary for the complete working system of the traffic signal installation(s). All submittals need to be pre-approved prior to the job and by the inspector as directed by the Engineer and/or the approved City of Houston Representative.

Email Traffic Signal Engineering and Operations, (citytrafficprojmgr@houstontranstar.org) for coordination and inspection of traffic signal work. Contractor is required to notify daily activities to City Traffic Signal Inspector via email (citytrafficinspector@houstontranstar.org) before 7:30 A.M.

All control equipment shall confirm to ITE and NEMA specifications and in accordance with the drawings and specifications.

All construction will be in accordance with the Texas Manual on Uniform Traffic Control Devices, latest revisions, and in accordance with the drawings and specifications.

All wiring throughout each traffic signal installation shall be in strict accordance with the National Electric Code, all local applicable codes and shall also comply with all requirements of CenterPoint Energy, in order that service may be obtained from them. All costs for code compliance are to be included in the bid for this contract.

1.04 REFERENCES

A. References: References to known standard specifications in the Specification shall mean and intend latest edition of such specification adopted and published at date of invitation to submit Proposals.

B. Reference to technical society, organization or body is made in Specifications in accordance with the following abbreviations:

	AASHO	American Association of State Highway Officials
	ACI	American Concrete Institute
*	AIEE	American Institute of Electrical Engineers
	AISC	American Institute of Steel Construction
	AISI	American Iron and Steel Institute
	ASA	American Standards Association
	ASTM	American Society for Testing and Materials

AWSC	American Welding Society Code
FS	Federal Specification
IMSA	International Municipal Signal Association
IPCEA	Insulated Power Cable Engineers Association
ITE	Institute of Traffic Engineers
MUTCD	Manual on Uniform Traffic Control Devices for Streets and Highways
NBFU	National Board of Fire Underwriters
NBS	National Bureau of Standards
NEC	National Electrical Code
NEMA	National Electrical Manufacturers Association
OSHA	Occupational Safety and Health Association
UL	Underwriters' Laboratories
* IEEE	Institute of Electrical and Electronics Engineers - name changed from AIEE & IRE (Institute of Radio Engineers)

1.05 PERMITS, LAWS, CODES, ETC.

The contractor and subcontractors shall comply with all Federal, State and local Laws, Codes and Ordinances applicable to the work and all requirements of the National board of Fire Underwriters having jurisdiction. If the above laws, codes or ordinances conflict with specification, then the laws, codes or ordinances shall govern except where Specification exceeds them in quality of quantity of materials or labor. Obtain and pay for all permits required in connection with the execution of the work as required. The Engineer and/or the approved City of Houston Representative shall be furnished with certified copies of these permits if requested.

1.06 COOPERATION WITH BUILDING OFFICIALS

Cooperate with local and other governmental officials and inspectors at all times. If such official or inspector deems special inspection necessary, provide assistance and facilities that will expedite their inspection. Any materials and or workmanship which are rejected by the Traffic Signal Inspector by reason of failure to conform to the requirements of the drawings or specifications, shall be removed and replaced by the contractor at their own expense.

1.07 SUBSTITUTIONS

A. Except in special instances, the Technical Sections of these specifications list more than one manufacturer of the products specified. Products of listed manufacturers conform basically to design and performance requirements as indicated on the Drawings and specified herein and Contractor in proposing their use shall indicate by detail drawings and/or descriptive data any modifications of items or assemblies necessary to provide the indicated and/or specified work.

B. Requests for substitutions of materials must be submitted in writing to the Engineer and/or the approved City of Houston Representative by the Contractor. These substitutions will only be considered if fewer than three manufacturers are listed in the Specifications.

C. Under no circumstances will the Engineer and/or the approved City of Houston Representative be required to provide that a product proposed for substitution is, or is not, of equal quality to the product specified. It is mandatory that the Contractor submit to the Engineer and/or the approved City of Houston Representative, in Writing, all evidence necessary to support this contention that the item proposed for substitution is equal to the item indicated by the Contract Documents. Items submitted for substitution must be submitted one month prior to bid opening.

1.08 MANUFACTURER'S SPECIFICATION AND INSTRUCTIONS

Install all manufactured items, materials and equipment in strict accordance with the manufacturer's recommended specifications except that the Specifications herein, where more stringent, shall be complied with.

1.09 MEASUREMENTS

Before doing any work or ordering any materials, the Contractor and Subcontractors shall verify all measurements of existing and new work and shall be responsible for their correctness. Any difference which may be found shall be submitted to the Engineer and/or the approved City of Houston Representative for consideration before proceeding with the work. No extra compensation will be allowed because of differences between actual dimensions and measurements indicated on the drawings.

1.10 RECORD DRAWINGS

Provide and maintain in proper order and in good, clean condition at the project sites, one complete set of prints of all project drawings. On this set of drawings, the Contractor shall neatly print and accurately inscribe, in red pencil, any and all changes or deviations from construction and installation as originally indicated in the plans and specifications. This set of prints shall be delivered to City of Houston Traffic Management and Maintenance at TranStar Third Floor, 6922 Old Kay Road, at the time of final acceptance of the work by the City in order to provide the City with an "AS BUILT" set of plans.

1.11 TEMPORARY FACILITIES

A. Weather Protection

1. Contractor shall at all times provide protection against weather, so as to maintain all work, materials, apparatus, and fixtures free from injury and damages. At the end of the day's work, all new work likely to be damaged shall be covered or otherwise protected.

2. Wet work shall not be performed when temperature is below 40° F, or is likely to go below 40° F, within the ensuing 48 hours, except when sufficient protective heat is provided and the Engineer's and/or the approved City of Houston Representative's approval in writing is obtained.

3. Contractor shall construct and maintain all necessary temporary drainage and do all pumping necessary to keep excavations, pits and trenches free of water.

B. Operation of Equipment

When electrical or other equipment is installed, it shall be the responsibility of the Contractor to check out same for a period of time as required by the Engineer and/or the approved City of Houston Representative for proper testing of the equipment. All items of equipment,testing instruments and incidentals necessary for proper testing of equipment shall be furnished by Contractor.

C. When any temporary facility is no longer needed for the proper conduct of the work as determined by the Engineer and/or the approved City of Houston Representative, the Contractor shall completely remove it from the project and shall repair or replace all material, equipment and finished surfaces damaged in doing so.

D. Contractor shall provide a portable toilet as needed.

1.12 PROTECTION

Provide barricades, fences, lights, etc., for protection of property and the public as required by local and/or State Ordinances. Contractor will be held liable for all damage to property and/or persons.

A. All barricades and signs shall conform to Texas MUTCD. Such barricades and protective signs shall be provided by the Contractor at their expense.

B. Flow of traffic shall not be interrupted completely without the approval of the Engineer and/or the approved City of Houston Representative. Restriction and minor diversion will be kept to a minimum. No work will be permitted in the traffic lanes during peak hours from **7:00 to 9:00 AM and 4:00 to 6:00 PM Monday through Friday**. Any open cuts in the intersections during these hours will be covered with steel plates to maintain uninterrupted traffic.

C. Flagmen shall be certified flagmen or off-duty uniformed peace officers of the law. Contractor shall provide flagmen to direct traffic when directed by the Area Engineer and/or the approved City of Houston Representative of the Traffic Management and Maintenance Division. This does not relieve Contractor of responsibility of taking other steps and providing other personnel who he may deem necessary for protection of work and public.

D. Appropriate Personal Protective Equipment shall be worn by all contract personnel when on the job-site.

1.13 RESTORING DAMAGED AREAS

For all work at identified intersections and along communication cable routing, in the event that sidewalks, pavement, curbs, wheelchair ramps, driveways, landscaped areas, areas with special pavement treatment, sprinkler systems, lighting systems, or other items or properties both public and private that are damaged during this construction, shall be restored to their prior condition without expense to the City of Houston. No separate payment will be made for the restoration of these items.

Where signal poles are installed inside the existing 4 foot sidewalk or within 12 inches of either side of the existing sidewalk, the Contractor shall provide a minimum of 4 foot paved sidewalk 12 inches away from edge of the signal pole. The horizontal slope for the sidewalk shall be 2 percent.

PART 2 PRODUCTS

2.01 MATERIALS

Contractor is responsible for furnishing all materials and labor for construction of items as shown on drawings and other incidentals necessary to provide a fully operational traffic control signal. The Contractor shall furnish and install all materials, with exception of materials to be provided by the City of Houston.

Material should be installed according to the technical specifications and standard details under the direction of the City of Houston representative assigned to the project.

In addition to all items to be furnished and installed by the Contractor, the Contractor shall furnish and install all items necessary for the complete signal system including but not limited to the following incidental materials:

All conduit nipples, couplings, grounding bushings, elbows, sweeps and service heads.
All reinforcing steel and ties.
Concrete, sand, cement, gravel, asphalt, earth fill.
Span guy, down guys, anchor rod assemblies.
Sidewalk guy assemblies (if necessary).
Guy guards, three bolts clamps, lag screws.
5/8" Thru-bolts, nuts, washers, thimble-eye nuts and bolts.
5/16" Stranded galvanized steel cable for guys and catenaries.
¼" Stranded galvanized steel cable for messengers.
Strand vises and links as needed.
Meter loop assemblies complete.
Signal mounting harware.
Copperweld ground rods and clamps furnished and installed in all foundations and each pullbox.

Flexible stainless steel cable strap ties. Cable ties shall be Panduit Part #MLT 4H-LP or equivalent.
#6 or #8 Soft bare copper wire for grounding poles, conduits, etc.
Miscellaneous hardware.

Interconnect cable shall be communications grades as follows:
Type PE-38 or PE-22 (aerial)
Type PE-39 (underground)

All proposed changes in the signalization plan must be submitted to the City of Houston, in writing, for approval.

The Contractor shall be responsible for the protection of all present utilities that have been located by the various utility companies. They shall also maintain and protect the existing traffic signals and their related equipment from damage caused by subcontractors and employees under his Contract but only to the extent of the Contractor's normal work operation, and he shall not be responsible for routine maintenance, normal wear and tear, or an act of God, unless otherwise specified.

The contractor shall bag all newly installed signal heads and/or pedestrian signal heads with burlap until final inspection and acceptance by the City of Houston Representative. The signal shall be wrapped with burlap at least twice so that the entire signal head is covered, and cannot be seen until it is placed in operation. The signal shall be de-energized while not in use. If, in the opinion of the Engineer and/or the approved City of Houston Representative, the new heads would create a hazard condition to motorists and/or pedestrians, the heads shall not be installed until one hour before turning on the new equipment.

All existing traffic signal equipment removed by the Contractor shall be tagged to identify location. A representative of Traffic Signal Engineering and Operations shall be given **24 hour** notice before delivery of an approval location by the Engineer and/or the approved City of Houston Representative. Equipment not identified will not be accepted and equipment not returned will result in the withholding of payment to the Contractor. Traffic Signal Engineering and Operations personnel will issue a receipt to Contractor for returned equipment.

When the City Traffic Engineer and/or the approved City of Houston Representative determines that the need for a traffic signal is critical to the public welfare, early "turn on" of the signal shall be required before the completion of the project. If the need arises, the City of Houston will assume the responsibility for maintenance and liability, or negotiate with the Contractor for maintenance and liability for such a signal.

The City Traffic Engineer and/or the approved City of Houston Representative may, at any time, authorize City of Houston personnel to enter the controller cabinet in order to restore any and all signal equipment to proper operation if the malfunction or non-function of such equipment poses a hazard or inconvenience to motorists or pedestrians. Such authorized entry may occur at any time within the period of the Contract and such

authorized entry shall in no way relieve the Contractor or manufacture of their respective warranties.

During the burn-in period, the Contractor shall restore operation of the installation within **four (4) hours** after notification of a malfunction. If the Contractor does not respond within **four (4) hours**, the City of Houston shall have the option of making the necessary repair and billing the Contractor for the actual time and materials required.

When replacing sidewalks or curb and gutters, it shall be the responsibility of the Contractor to reinstall them to match existing color and/or surface texture.

Materials specified herein shall be installed as per Traffic and Transportation Construction Details drawings-02893 series and the City of Houston Traffic Signal Standard Specifications.

The Contractor shall be responsible for having an authorized manufacturer representative of traffic control equipment present as per the requirements of Specification Section 01755, "STARTING SYSTEMS".

Each work order or intersection shall be a stand alone "Turn Key Job" by the Contractor.

A steel template of the proper dimensions shall be furnished and used by the Contractor to secure anchor bolts while constructing pole foundations.

Flexible stainless steel cable ties for strapping signal cable to messenger shall be min: 13.38 inches long, 120 lb. min. tensile holding strength, 3/16" to 3-1/2" wire bundle range. (Panduit Part #MLT 4H-LP or approved equal).

2.02 PRECONSTRUCTION MEETING

The Traffic & Transportation Division for Traffic Signal Contracts shall schedule a Preconstruction Meeting at TranStar after award of contract and prior to commencement of construction. The Contractor or his authorized representative will be required to attend.

For roadway contracts, the preconstruction meeting for the traffic signal work shall be coordinated by the roadway project manager.

2.03 MATERIALS FURNISHED BY THE CITY

Prior to material pick up, a written notice is required sixty (60) calendar days in advance. This letter shall be addressed to:

City of Houston - Traffic Signal Engineering & Operations
Traffic & Transportation Division
6922 Old Katy Road (Houston TranStar)
Houston, Texas 77024

Materials furnished by the City shall be picked up by the Contractor at the Traffic Operations Center, 2200 Patterson Street, Houston, Texas 77007, after giving a minimum of two (2) working days notice to the City of Houston by emailing to: (citytrafficprojmgr@houstontranstar.org). This is in addition to the written requirements listed above. These materials will be furnished at no cost to the Contractor.

Any and all material furnished by the City to the Contractor which is not used in this contract is the property of the City of Houston and shall be returned to the locations specified by the Traffic Signal Inspector before final payment is made to the contractor.

2.04 PRODUCT DATA, SHOP DRAWINGS, AND SAMPLES

Contractor shall provide **three (3)** complete bound sets of Product Data, including: illustrations, standard schedules, performance charts, instructions, brochures, diagrams, and other information to illustrate materials or equipment for all Contractor furnished equipment.

Contractor shall furnish shop drawings, as required in the standard specifications and standard details, or as required by the Engineer and/or the approved City of Houston

Representative. As a minimum, Contractor shall be required to furnish shop drawings for all structural elements, including cabinets, traffic signal poles, traffic signal arms, luminaires, luminaire supports, vehicular traffic signal head mounts, and pedestrian signal head mounts **prior** to ordering or fabricating these elements. Shop drawing submittals are required for each of the preceding elements. Contractor is not required to furnish shop drawings for any equipment furnished by the City of Houston.

Contractor shall furnish samples, or prototypes, of the following equipment within the specified time frame.

Item	Calendar Days from Bid Award
Controller Cabinet Assembly	45
Traffic Signal Controllers	60

PART 3 EXECUTION

3.01 OPERATION OF NEW & EXISTING TRAFFIC SIGNALS DURING CONTRACT PERIOD

To facilitate construction, the Contractor shall be required to install temporary poles, guys, cables, signals, conduits, wiring and adjustments as needed for temporary traffic signal operation during construction. **The Contractor will be responsible for furnishing and installing all materials as directed by the City of Houston Signal Inspector for temporary traffic signal installation.** The Contractor shall contact the signal inspector assigned to the project with a daily progress report. The Contractor shall

coordinate and obtain approval from the City of Houston signal inspector for all material as well as the configuration of the temporary traffic signal prior to installation. Proposed configurations and materials for the temporary traffic signal installation shall be submitted to the City of Houston Traffic Signal Engineering and Operations **no less than five (5) working days** prior to implementation. Operational timing and phasing of the temporary traffic signal installation during construction will be the responsibility of the City of Houston Traffic Management & Maintenance Branch personnel. Temporary traffic signal work will not be paid for directly, but shall be considered incidental to Traffic Control during construction. All temporary facilities shall be removed as directed by the signal inspector and remain the property of the Contractor upon operation of the new traffic signal construction.

The Contractor shall maintain existing signal installation(s) operation during construction of the new signal system. The Contractor may be required to photograph the existing signal to document existing status and functionality of all signal hardware and devices before beginning construction. It is the Contractor's responsibility to maintain all existing signal hardware and devices including signal heads and bulbs, interconnect, pedestrian elements, etc. The Contractor will not be responsible for power consumption of the signal during construction, and for work with the controller or inside the cabinet unless a city representative is onsite or as directed otherwise by the City of Houston. The Contractor shall submit all existing intersection documentation to the city inspector for the project before commencing work. The Contractor shall respond within **two (2) hours** after notification from appropriate City of Houston personnel. If the Contractor does not respond, the City of Houston will make necessary repairs and bill the contractor at an overtime rate (1.5X) for work performed.

The Contractor shall provide a minimum of five (5) working days notice to City of Houston representative at 713-881-3172 when seeking approval for a change in location, method of operation of traffic signals or traffic lanes, or change in traffic patterns or timing plans.

The Contractor shall provide a minimum of two (2) days notice when seeking approval regarding the replacement of an existing traffic signal installation.

The Signal Contractor shall be billed for any repair work performed on overtime (1.5X) for any repairs required because of Contractor negligence.

Uniformed Police Officers shall be employed by the contractor and are required to be on the job site. It shall be mandatory to have Uniformed Police Officer(s) for traffic signal turn-ons. Certified flagmen or Uniformed Police Officers may be used, as needed, for lane closures. It is the Contractor's responsibility to use the appropriate personnel for lane closures. The Texas Manual On Uniform Traffic Control Devices will be observed for all lane closures.

All work in this contract, requiring signal outages, or lane closures, shall be performed **between the hours of 9:00 A.M. and 4:00 P.M. Monday through Friday**, unless prior

authorization has been obtained from the Engineer and/or the approved City of Houston Representative.

Down time, if any, shall be kept to an absolute minimum. The switch over from the old system, or signal turn-on, shall be accomplished within the **six (6) hours between 9:00 A.M. and 3:00 P.M.** Contractor shall furnish and install all temporary traffic control (stop signs, flagmen, uniformed officers, etc.) during any down time, in addition to all required construction signs. Contractor shall inform the city of Houston to schedule a turn-on date **a minimum of 72 hours** in advance of need.

The Contractor shall hire a traffic engineer approved by the City of Houston to implement the traffic signal timings for the temporary signal system(s) and any modifications to the traffic control plan.

The Contractor shall furnish the City of Houston with a 24-hour telephone number for the purpose of forwarding malfunction calls. In the event that the Contractor cannot be reached at the above mentioned number, the City of Houston will take the necessary action to restore the traffic signal system to normal operation and all expenses incurred will be deducted from the final payment of the work order. All City of Houston labor expense shall be billed at overtime (1.5X) rates.

Contractor will be required to respond immediately and to initiate emergency maintenance operations on the jobsite a **maximum of four (4) hours** after the call is received from City of Houston. The Contractor shall pursue repairs to the traffic signal system and have it back in normal operation within a **maximum of six (6) hours** after call is received by the City of Houston, or a representative of the City of Houston.

3.02 CHARACTER OF WORKMEN AND EQUIPMENT

All equipment and workmen provided by the contractor for work hereunder shall be the best available for the kind of work being performed. Any person employed by the Contractor whom the City of Houston may deem temporarily or permanently incompetent or unfit to perform the work, shall under written instruction of the Engineer and/or the approved City of Houston Representative be removed from the job, and such person shall not again be employed on the work. Failure by the Contractor to provide adequate equipment may result in annulment of this contract as herein provided.

3.03 ELECTRICAL WORK

Electrical work is defined as installing cables, electrical terminations, and signal turn-ons. Installation of conduits is EXCLUDED from electrical work. Installation of loop wire in sawcut is EXCLUDED from electrical work.

All Contractor personnel working on City of Houston traffic signals performing duties directly involving setting up or installing signs, signals, pushbuttons, or traffic control shall be International Municipal Signal Association (IMSA) certified Level I, or greater. An IMSA certified Level II technician shall be present on site during all cabinet

terminations and during the installation of all signs, pavement markings, signals, pushbuttons, and traffic control.

3.04 SALVAGED MATERIALS

At existing traffic signal installations which are to be updated or modernized by the Contractor, all abandoned wire, cable, signals, poles, pole bases, pole tops, mast arms, signs and other miscellaneous equipment shall be taken down and/or removed. All equipment shall be reduced to simplest form. These salvaged materials are the property of the City of Houston and are to be delivered and unloaded to the location or locations designated by the City of Houston Traffic Signal Inspector assigned to the project.

3.05 ELECTRICAL SERVICE

The Contractor shall notify the City of Houston Traffic Signal Inspector assigned to the project **within seven (7) days of Contractor award** for power at intersection.

3.06 SUBCONTRACTING

If a vendor subcontracts any portion of a contract for any reason, they must include, in writing, the name and address of the subcontractor, name of the person to be contacted including telephone number and extent of work to be performed. This information is to be submitted with bid proposal. In the event of a change during construction, Contractor is required to submit new information to the Engineer and/or the approved City of Houston Representative, for approval, **five (5) days** prior to using the subcontractor on the job. City of Houston reserves the right to reject a bid of any bidder if the bid names a subcontractor who has previously failed in the proper performance of an award or failed to deliver on time contracts of a similar nature, or who is not in a position to perform properly under this award. City of Houston reserves the right to make determination as to the foregoing.

3.07 SYSTEM GROUNDING

All poles, cabinets, conduits, signal common, and service common shall be bonded with a No. 8 AWG bare copper wire, or equal, to form a continuous system and effectively grounded to 5/8-inch x 8 foot copperweld ground rods.

3.08 STRANDED GALVANIZED STEEL CABLE

Guy, messenger and catenary wires shall be Siemens Martin Grade, seven strand, galvanized, high strength steel cable, 5/16 inch diameter for guy and catenary wires and ¼ inch diameter for messenger wires.

3.9 POLE RAKING

Poles shall be set with a sufficient amount of rake so that they are plumb with the signal load or slightly raked away from the signal load. Cantilever pole structures and 4-1/2" OD steel poles should be plumb, strain poles should have a slight backward rake (1 to 2 inches); wood poles shall utilize down guys to maintain appropriate signal height clearance during construction. The Contractor shall rake the poles to the satisfaction of the Traffic Signal Inspector.

Rake is hereby defined as the inclination to the vertical measured at the top of the structure in the opposite direction of the strain axis.

3.10 ABANDONED FOUNDATIONS

The tops of unused foundations shall be removed to a depth of two feet (minimum) below grade and back-filled according to specifications.

3.11 LOADS AND STRESSES DUE TO CONSTRUCTION OPERATIONS

Contractor shall have full responsibility for preventing over-stresses of any structure, cables, poles or any part of them during construction. This also applies to existing work facilities affected by his operations. The Contractor shall fully check the effect of his operations in this regard, and shall provide temporary supports and connections required to assure safety and stability of both new and existing work to prevent over-stress of any part thereof.

3.12 APPARATUS LOCATION

The locations of all poles, controllers, actuators and signals shown on the plans are diagrammatic only. The specific locations of such devices shall be decided by the appropriate design personnel and shall be staked out under their direction. Vehicular and pedestrian traffic signals shall be placed and aligned as the City of Houston Traffic Signal Inspector directs.

3.13 CONCRETE POUR

The time of day of the concrete pour shall be stipulated by the Contractor.

3.14 SEQUENCE OF WORK

Each new signalized intersection shall be in operable condition including electrical service within **fourteen (14) days** after the first signal pole is installed, unless conditions caused by a paving contractor or roadway construction contractor prevents the completion of the intersection(s).

The order in which the intersections are to be completed may be specified by the Engineer and/or the approved City of Houston Representative and it shall be the sole responsibility of the Contractor to schedule and coordinate their work. All work shall be coordinated in such a manner as to prevent delays resulting from work to be performed by others and to complete his work within the specified time.

On the day when the intersection is to be turned on or its "Turn On" date, the Contractor will be given a "punch list" from the Signal Inspector for any items that need attention concerning the conditions of signal equipment. These items shall be completed within **ten (10) days** of the date on the "punch list" given to the contractor.

3.15 UTILITY COORDINATION

The Contractor shall contact the Lone Star Notification Center (713-223-4567, in Houston, 800-669-8344, outside Houston) **72 hours** before commencing any work to locate any utility lines in the construction area. It is the Contractor's responsibility to physically locate any water and sewer lines and to adjust the location of any foundation(s), for approval by the City of Houston Traffic Signal Engineering and Operations.

3.16 UNDERGROUND UTILITIES

The exact location of underground utilities and pipelines is not certain. The Contractor shall contact the Utility Coordinating Committee (U.C.C.) to determine exact locations of underground utilities prior to drilling for foundations or any other work that might interfere with or damage present facilities. Contractor shall be responsible for keeping the transmittal number from the U.C.C. current during construction.

3.17 LOCAL CONDITIONS

The Contractor shall make any additional investigations he deems necessary to properly bid any and all work related thereto. No additional compensation will be made available to the Contractor for work arising from failure to examine the site and/or subsoil conditions. Staking of specific locations by the Engineer and/or the approved City of Houston Representative shall not remove the Contractors responsibility for any damage caused by the Contractor to any underground utility.

3.18 RIGHTS OF VARIOUS INTERESTS

Wherever work being done by the City's forces or by any other Contractor is contiguous to work covered by this contract, the respective rights of the various interests involved shall be established by Engineer and/or the approved City of Houston Representative, to secure completion of the various portions of the work in general harmony.

3.19 TRENCHING

No trenching shall be allowed within five feet of a tree.

3.20 DIRECTIONAL DRILLING, BORE, AND JACK

No open cutting or trenching of streets, driveways and sidewalks shall be allowed without prior approval of the Engineer and/or the approved City of Houston Representative at each location. All conduit runs under streets, driveways or sidewalks shall be by directional drilling, bore, or jack. Water jetting methods shall not be accepted.

3.21 PUBLIC SAFETY AND CONVENIENCE

All work done under this contract shall be done in compliance with the Texas Manual on Uniform Traffic Control Devices (TMUTCD). Each operation shall be considered a work zone area and shall be treated in accordance with the TMUTCD.

The Contractor shall have a Certified Worksite Traffic Supervisor who will be responsible for initiating, installing, and maintaining all traffic control devices as described in the TMUTCD. The Worksite Traffic Supervisor shall have at least one (1) year of experience directly related to worksite traffic control in a supervisory or responsible capacity and shall be certified by the American Traffic Safety Services Association or International Municipal Signal Association. The Worksite Traffic Supervisor will be incidental to Maintenance of Traffic and will not be measured separately for payment.

The Worksite Traffic Supervisor shall be available on a **twenty-four (24) hour day** basis and shall review the project on a day to day basis as well as being involved in all changes to traffic control. The Worksite Traffic Supervisor shall have access to all equipment and materials needed to maintain traffic control and handle traffic related situations. The Worksite Traffic Supervisor shall insure that routine deficiencies are corrected with a **twenty-four (24) hour** period.

The Worksite Traffic Supervisor shall be available on the site within **forty-five (45) minutes** after notification of an emergency situation, prepared to positively respond to repair the work zone traffic control or to provide alternate traffic arrangements.

Failure of the Worksite Traffic Supervisor to comply with these provisions may be grounds for decertification or removal from the project or both. Failure to maintain a designated Worksite Traffic Signal Supervisor or failure to comply with these provisions will result in temporary suspension of all activities except traffic and such other activities deemed to be necessary for project maintenance and safety.

The Contractor shall at all times so conduct their work as to insure the least possible obstruction to normal pedestrian and vehicular traffic including access to all public and private properties during all stages of construction, and inconvenience to the general public and the residents in the vicinity of the work, and to insure the protection of persons and property, in a manner satisfactory to the City Engineer and/or the approved City of Houston Representative.

The Contractor shall provide all barricades and take all necessary precautions to protect buildings and personnel. All work shall be complete in every respect and accomplished in a workmanlike manner and contractor shall provide for removal of all debris from City of Houston property.

The successful bidder shall at all times guard against damage or loss to the property of the City of Houston or of other vendors or contractors and shall be held responsible for replacing or repairing any such loss or damage. Any damage to landscaping in the work area, including sod shall be replaced at the Contractor's expense.

Prior to closing any section of the project to traffic, the Contractor shall furnish, erect and maintain barricades and warning signs at and in the vicinity of all construction projects at all times, both day and night, during the construction period of the contract, and all such barricades and warning signs, shall be in conformance with the requirements of Part 6 Temporary Traffic Control of the Texas Manual on Uniform Traffic Control Devices and as shown on the drawings.

Unless otherwise set forth in these specifications, the Contractor shall receive no direct compensation for furnishing, erecting, and maintaining the necessary barricades, lights, flares, signs, or for any other incidentals necessary for the good and proper safety, convenience, and direction of traffic during the period prior to final inspection and acceptance by the City of Houston.

3.22 SPECIAL REQUIREMENTS

A. A Steel Template shall be furnished by and used by the Contractor to secure anchor bolts while constructing pole foundations.

B. Pole Foundations shall be capped where needed, in order to provide a smooth, flat, and level surface. Capping shall consist of a one (1) inch thick mortar cap prepared with a 1:3 sand-cement mortar ratio. The cap shall be steel trowel finished.

C. Extra-length Concrete Pole Foundations shall be provided when required by site conditions. Reinforcing steel shall be increased by the same length as the increase in foundation length. Rods shown on Foundation Details shall be increased as follows: Each extra foot of foundation shall require on additional foot of length for hooked rods and two additional turns for helix.

D. All Special Foundations shall be designated and approved by the appropriate design engineer and/or the approved City of Houston Representative.

E. Sono Tube shall be used when the City of Houston Traffic Signal Inspector deems it necessary.

3.23 CONCRETE FINISHING

Honeycombed surfaces or other defects shall be patched with mortar of the same consistency as the mortar from which the concrete is made. Such mortar shall be well trowelled and then floated to remove trowel marks.

A. Finish for Formed Surfaces After patching above specified, exposed formed surfaces shall be finished by removing form marks, fins and other projections.

B. Finish for Uniformed Surfaces
   1. Patches in streets, driveways and walks shall be finished to match adjacent surfaces.
   2. Surfaces not Otherwise Specified – Steel trowel finish.

3.24 CONCRETE CURING

Immediately after placing or finishing, concrete surfaces shall be protected against moisture loss for **a minimum of seven (7) days**. Wet earth, waterproof paper, vinyl sheets or cotton mats shall be placed over concrete during curing period in order to insure fulfillment of this requirement. Membrane curing method may be used **EXCEPT when** concrete surfaces are to receive additional concrete or mortar, or are to be painted.

3.25 CONCRETE/PAVEMENT REPAIR

Repairs to concrete pavement shall be in accordance with Public Works Drawing Numbers 02902-01and 02902-02 titled, "Pavement Repair Details for Street Cuts",` and Specification Section 02951, "Pavement Repair and Resurfacing".

3.26 FLEXIBLE BASE PAVEMENT REPAIR

Repairs to flexible base pavement shall be made in accordance with Public Works Drawing Number 02902-01 titled, "Pavement Repair Details for Street Cuts", and Specification Section 02951, "Pavement Repair and Resurfacing".

3.27 TRAFFIC SIGNAL TESTING SERVICES

A. PROCEDURES

1. Selection:
   City of Houston shall employ an Independent Testing Laboratory to ensure Contract Document compliance.

2. Test Reports
   Testing laboratory will furnish reports to the Engineer, Structural Engineer, City of Houston and Contractor covering all of its determinations and all of its control services. Reports will show all data customarily listed by the laboratory in

reporting such tests including daily reports on quantities and types of materials together with location in the project. Form of reports will be as approved by the Engineer and/or the approved City of Houston Representative.

3. Test Methods
   Tests and inspections will be conducted in accordance with the requirements of these Specifications or, if not herein specified in accordance with the latest standards of the American Society for Testing and Materials or other recognized authorities.

4. Contractor's Responsibility
   (a) Cooperate with the testing laboratory and:
      (1) Make available, without cost, samples of all materials to be tested.
      (2) Furnish such normal labor as is necessary to obtain samples at the project and to assist in making slump tests and casting and curing cylinders.
      (3) Advise the laboratory of the identity of material sources and instruct these suppliers to allow inspections by the laboratory, and notify the laboratory sufficiently in advance of operations to allow for completion of initial tests and assignment of inspection personnel.

      (4) Contractor shall provide laboratory testing for each different concrete load.
   (b) Rejected Materials and/or Workmanship
      If, after initial tests have been performed, any materials and/or workmanship are rejected by the testing laboratory, Contractor shall
      (1) pay for any subsequent testing required for materials which have been rejected and/or replaced.

      Any materials and/or workmanship which are rejected by the testing laboratory by reason of failure to conform to the requirements of the Drawings and/or Specifications, shall be removed and replaced with new acceptable materials by the Contractor at his own expense.

5. Additional Responsibility
   (a) The testing of all cable furnished shall be properly tested by the manufacturer and data submitted through the Contractor to the Engineer and/or the approved City of Houston Representative.
   (b) All cable furnished to the job site shall be properly tested on the reel use.

3.28 PRELIMINARY WORK

A. PROCEDURES

1. City Requirements
   (a) City requirements relating to the work of this section shall be ascertained by the Contractor. Contractor shall comply with all such requirements, including those relating to continued maintenance until completion of the project.

(1) If the City should require that certain portions of the work be performed by City personnel and equipment, all costs in connection therewith which are chargeable against the project shall be paid by the Contractor as an obligation of this Section

(2) If re-routing of vehicular and/or pedestrian traffic is necessary to complete work of this Contract, Contractor shall submit a copy of his proposed re-routing plan to the City and the Engineer and/or the approved City of Houston Representative for approval **seventy-two (72) hours** before proceeding with the work.

(3) Re-installation and restoration of use of existing public and private installations, which are temporarily and/or permanently removed and/or relocated for work of this Contract, shall be performed as a part of the work of this Section

2. Existing Installations of City-Owned Property

(a) Perform all work relative to removal, storage and/or protection of existing installations of street lights and signs, fire hydrants, manholes, and other existing installations in the way of project construction.

(b) Provide and maintain approved temporary protection of existing installations until project completion and acceptance. Remove temporary protection when, and as, directed by the City.

(c) Existing facilities which are no longer required shall be disconnected as directed. Comply with the requirements of municipal agencies having jurisdiction over such work.

(d) Unless otherwise directed, all abandoned facilities shall be removed by Contractor and the holes and trenches filled with approved compacted fill.

3.29 GUARANTEES

All items installed under this specification, having a manufacturer's guarantee shall be installed by or under the direction of the manufacturer or his certified agent, when so required to conform with the manufacturer's guarantee, and all such manufacturer's guarantees, warranties and bonds shall be forwarded to the City of Houston representative.

The Contractor, by accepting this contract, guarantees all workmanship, materials and equipment performed or furnished and installed under this specification for a period of one year from date of completion and shall, at their entire expense and within said term of guarantee, repair, replace or adjust all faulty, broken, or maladjusted materials and/or equipment furnished and installed under this specification, including lamp replacement.

END OF SECTION

SECTION 16709

COMMUNICATIONS CONDUIT

PART 1 GENERAL

1.01 SECTION INCLUDES

A. Communications conduit with innerducts.

1.02 MEASUREMENT AND PAYMENT

A. Unit Prices.

1. This item will be measured by the linear foot of "Communications Conduit" installed. Each linear foot shall include: conduit (HDPE and Rigid Steel), inner duct, tracer wire, pull tape, marking tape / posts and all incidentals. Conduit shall be measured horizontally along the surface from center of communications service box to center of communications service box or other terminating point. Risers shall be measured as the amount of conduit extending from the ground surface.

2. Payment for the work performed and materials furnished in accordance with this item will be paid for at the unit price bid for "Communications Conduit." The price shall be full compensation for furnishing and installing conduit; for trenching, boring, excavating, furnishing and placing backfill, replacing pavement structure, sod, riprap, curbs or other surfaces; for marking location of conduit (when required); for furnishing and installing all fittings, junction boxes, special radius sweeps, and expansion joints, conduit straps; and for all labor, tools, equipment and incidentals necessary to complete the work.

PART 2 PRODUCTS

2.01 MATERIALS

Provide new materials that comply with the details shown on the plans and the requirements of this specification.

A. High Density Polyethylene (HDPE) Conduit

Conduit for fiber optic cable shall be Schedule 80 HDPE conduit having a 4 inch internal diameter. The outer HDPE conduit provides a shell of high tensile and compression strength. The outer conduit is orange in color. Conduit shall terminate without bends if possible. Bends shall be rigid steel conduit; having a minimum radius of 10 times the nominal

diameter of the conduit (30 degree maximum bends - 90 degree bends are prohibited). The exterior of the steel bends shall be double wrapped with 10-mil PVC tape.

HDPE conduit shall be joined by solvent-weld method in accordance with the conduit manufacturer's recommendation. No reducer couplings shall be used unless specifically indicated on the drawings.

B. Inner duct

All HDPE Conduit shall be installed with four (4) one inch (1") polyethylene innerducts. These inner ducts shall be smooth on both the inside and outside to facilitate pulling the inner duct into the conduit and pulling future fiber optic cable into the inner duct. One (1) inner duct shall be provided in each of the following colors: green, blue, red, and yellow. Three feet of the inner duct shall extend beyond the end of the conduit, and coiled inside of the communications service box. The inner duct shall have 900 lb. pull tape.

C. Marking Tape / Posts

Underground marking tape will be used in all areas where trenching is utilized to install underground conduit. Use marking tape in conjunction with marking posts and marking discs.

The technical specifications of underground marking tape are identified below, along with applicable testing methods necessary to establish that a cable submitted for approval meets these specifications.

TEST PROPERTY	THRESHOLD SPECIFICATION	REQUIREMENTS
Standard Weight	ASTM D2103	20 lbs/100 feet
Thickness – Overall	ASTM D210	4 mil
3 in. Tensile Break – MD	ASTM D882	35 lbs/ft
3 in. Tensile Strength – MD	ASTM D882	4 kpsi
3 in. Tensile Break – TD	ASTM D882	38 lbs/ft
3 in. Tensile Strength – TD	ASTM 882	5 kpsi
Elongation – MD – MD	ASTM 882	530 %
Elongation – TD – TD	ASTM 882	660 %
Tear Strength	ASTM D2261	1.5 lbs/ft

Underground marking tape will be a 3-inch wide, tear resistant, corrosion resistant elastic PVC orange tape, imprinted with the legend "CITY OF HOUSTON BURIED CABLE – CALL TRAFFIC OPERATIONS at 713-881-3172". This legend will be printed every three (3) feet in black letters.

Underground cable marking posts will be used everywhere feasible and practical in all areas where fiber optic cable is installed in underground conduit. This is the preferred method of marking, since it is very visible. Marking posts should be placed every 500 feet in urban area, and every 1000 feet in suburban areas, as well as at every intersection corner and every change in direction. Exception would be locations like downtown where all surfaces are paved, where discs would be more practical.

Use marking discs set in concrete or pavement where the use of marking posts is not feasible and practical, i.e., areas such as downtown where everything is paved and for aesthetics.

Technical specifications of underground marking posts are identified below.

1. Line Markers will be made from ultraviolet-stabilized High Density Polyethylene (HDPE)
2. Minimum 3-1/2" O.D. tubular design
3. Text will be hot-stamped into the fittings with an extra u-v clear coat.
4. Crossing casing vents will be used to help maintain atmosphere conditions.
5. Line markers will require no maintenance after installation

PART 3 EXECUTION

3.01 CONSTRUCTION METHODS

A. General

Place conduit in accordance with the lines, grades, and details shown on the plans or as directed. Conduit shall be buried a minimum of 30 inches deep underground unless otherwise shown on the plans. Fit conduit terminations with bushings or bell ends.

Prior to installation of innerduct/cables, pull a spherical template of at least 75% of the inside diameter of the conduit/inner duct through the conduit/innerduct to ensure that it is free from obstruction. Cap or plug empty conduit places for future use.

Conduit shall have 30 degree sweeps into communications service boxes or cabinets. Conduit bends shall have a minimum radius of 18 inches.

When installing the multiduct conduit, the outer shell and innerduct shall be continuous (without splices) up to 800 feet from communication service box to communication service box.

Where existing surfacing is removed for placing conduit, repair by backfilling with material equal in composition and density to the surrounding areas. Immediately repair any damaged

infrastructure including sidewalks, driveways, riprap, etc. to equivalent conditions prior to construction.

Any obstructions to the trenching / boring operation such as utilities, structures, sprinkler systems, etc. are to be protected from damage by the contractor during construction and until the work is completed. In the event of damage, the contractor shall be responsible for the repair / replacement at his expense with materials and methods which leave the damaged items in as good or better condition than original. Immediately after installation of conduit, backfill pits, excavation or trenches.

B. Trenching

No trenching shall be allowed within 5 feet of a tree. Where the depth of conduit changes, the trench bottom shall have a slope of 3 / 1 (horizontal / vertical) to accommodate the depth change.

C. Boring / Jacking / Directional Drilling

Boring shall be the preferred method of excavation unless specified otherwise in the plans. When indicated on the plans, conduit crossing existing pavement shall be placed by jacking and boring methods. The boring and jacking method used shall be approved by the Engineer prior to commencing work.

Excavate suitable pits for conducting boring operations (clearly mark/protect excavation to avoid injury by public). Pits shall be kept 2 feet clear outside of the pavement edge. Install conduit so there is no interference with street operation or no structure is weakened or damaged.

Unless otherwise specified in the plans, the method and equipment used in jacking casing or pipe shall be optional with the contractor, provided that the proposed method is approved by the Engineer. Heavy duty jacks suitable for forcing pipe through the embankment shall be provided by the contractor. Uniform pressure shall be applied from all jacks. Pressure shall be transmitted evenly around the ring of the pipe through an approved jacking head.

Once boring / jacking operations have begun, the boring / jacking shall be continuous, without interruption, insofar as practicable, to prevent the pipe from becoming firmly set in the embankment.

Material excavated ahead of the pipe shall be removed through the pipe. Jetting will not be permitted except as approved by the Engineer. The diameter of the excavation shall conform as closely as practicable to the outside diameter and circumference of the pipe being jacked.

D. Tracer Wire

One (1) No. 6 AWG Green, unspliced THW/XHHW wire shall be installed in each conduit. The Tracer Wire shall be pulled inside of the fiber optic conduit in the voids outside of the innerducts. Lubricants used in pulling the tracer wire shall be water soluble. A minimum of 5-feet of wire shall be coiled, and secured, in the communications service box. The ends of all tracer wire within a communications service box shall be connected to a common lug to allow for locating multiple segments of conduit run with one setup of the detection equipment.

E. Pull Tape

No pull ropes, twine, or pull strings will be used on this project for the purpose of installation. Further, if the plans and specifications indicate pull tape for future use do not substitute pull ropes, twine or pull strings for pull tape.

Pull tape will be prefabricated woven polyester tape made from low friction, high abrasion resistant yarns providing a low coefficient of friction. Pull tapes will be prelubricated. Pull tapes will be printed with sequential footage markings for accurate measurement. Pull tapes will be ½ inch wide and have a minimum tensile strength of 1,250 pounds.

F. Sealing

After installation of cables and wires the conduits shall be sealed / plugged with a suitable compound so as to prevent the entrance of moisture or gases.

G. Submittals

Manufacturers' cut sheets / specifications for all equipment proposed under these specifications shall be submitted to the City of Houston's Traffic Signal and Operations branch at Houston TranStar (713-881-3172) prior to construction.

END OF SECTION

THIS PAGE IS INTENTIONALLY LEFT BLANK.

SECTION 16710

PULL BOXES

PART 1 GENERAL

1.01 SECTION INCLUDES

A. Pull boxes of the various types and sizes required complete with lids.

1.02 MEASUREMENT AND PAYMENT

A. Unit Prices

1. Payment for this item will be measured as each ground box and or extension by type, complete in place. Concrete aprons, if required, will be measured as each pull box with concrete apron, complete, in place.

2. Payment for the work performed and materials furnished in accordance with this item will be paid for at the unit price bid for "Pull Boxes" of the various types and sizes specified. The price shall be full compensation for excavating and backfilling; for constructing, furnishing and installing the pull boxes and concrete rings when required; for concrete and reinforcing steel; and for all labor, tools, equipment and incidentals necessary to complete the work.

PART 2 PRODUCTS

2.01 MATERIALS

A. Provide new materials that comply with the details shown on the plans and the requirements of this specification.

B. All pull boxes shall be constructed of polymer concrete consisting of sand and aggregate bound together with a polymer resin. Internal reinforcement may be provided by means of steel, fiberglass, or a combination of both. Chopped fiberglass, polyethylene, or polystyrene are not allowed for internal reinforcement.

C. The material used to shall have the following minimum allowable properties:

Compressive Strength:	10,000 psi
Flexural Strength:	7,000 psi
Tensile Strength:	1,500 psi

PART 3 EXECUTION

3.01 INSTALLATION

A. General

1. Installations shall be in commercial and residential sidewalks and behind curbs where no deliberate traffic is planned.

2. Pull boxes and extensions shall be furnished in the following nominal sizes (Width X Length X Depth):

Type	Purpose	Dimensions
A	Detector Loops & Hardwire Interconnect	13" x 18" x 24"
B	Standard traffic signal pull box, but also used for detector loops where multiple loops enter the pull box	17" x 30" x 24" 17" x 30" x 12" (Extension)
C	Standard pull box used for most communications applications, or where a larger pull box is needed due to multiple conduits	26" x 38" x 24" 26" x 38" x 12 (Extension)

3. Each enclosure shall be designed and constructed flush to grade with the cover fitting flush to the box.

4. Each enclosure shall be suitable for installation in either direct or buried native soil, embedded in concrete or embedded in asphalt surfacing. A concrete collar shall be furnished for each installation in asphalt, or where called for on the plans.

5. All enclosures shall withstand shipping and installation practices without chipping, cracking, or structural damage. Any pull box damaged, or cracked, during installation shall be replaced by the Contractor.

6. All pull box covers shall be equipped with a minimum of two stainless steel lockdown mechanisms. Multiple piece covers shall be equipped with a means of interlocking with each other, or each section shall be secured with two stainless steel lockdown mechanisms. Tools to unlock the covers shall be furnished. A minimum of one (1) tool shall be furnished with each ten (10) pull boxes supplied. All covers shall have a logo recessed into the cover with the legend, "TRAFFIC SIGNAL" in two-inch minimum height letters, or other as specified by the City of Houston.

7. All covers shall have a recessed access point to allow removal of the cover with a special lifting tool. One lifting tool shall be furnished with each ten (10) pull boxes. The access point shall be located and designed to allow the maximum amount of leverage and safety possible.

8. Pull boxes shall be designed and suitable for installation and use through a temperature range of –40 degrees C to 60 degrees C.

9. Material Safety Data Sheets (MSDS) must be attached in a weather tight vessel on each order.

10. A certified copy of all test reports shall be signed and sealed by a registered State of Texas Professional Engineer and submitted prior to receipt of shipment.

11. All pull boxes and covers shall be rated for a static vertical design load of 15,000 pounds, minimum. All pull boxes must pass a minimum static vertical load test of at least 22,500 pounds. A physical description of the testing methods shall be included with the test reports. Load versus deflection curves shall be provided.

12. All pull boxes shall be capable of supporting a lateral load, design bearing pressure, of 600 pounds per square foot. Lateral load testing shall be applied to the longest dimension. The load shall be transmitted by a flat, rigid plate 24 inches wide by the depth dimension of the enclosure, bearing against any suitable medium which will conform to the shape and angle of the enclosure sidewall to achieve uniform loading.

13. Pull box Vertical Load Testing: The 15,000 pounds design load and 22,500 pounds testing load shall be distributed over a 5 inch by 10 inch area. All covers shall be tested, installed on a typical pull box. The loading pad shall be centered on the part of the cover that will produce the maximum deflection under load. A deflection-measuring device shall be used to measure deflection. Deflection under design load shall not exceed:

Cover	½ inch
Pull box	¼ inch per foot of pull box length.

14. Permanent deflection of the cover or pull box shall not interfere with the placement or removal of the cover.

15. All covers shall be skid resistant and should have a minimum coefficient of friction of 0.50 on the top surface of the cover.

16. Any point on the cover must be able to withstand a 70 foot-pound impact with a 12-pound weight having a "C" Tup (ASTM D-2444) without puncturing or splitting.

17. Installation of the pull boxes shall be in conformance with the details shown on the plans. When shown on the plans, a concrete ring or apron shall be provided.

3.02 CONDUIT ENTRANCE TO PULL BOX

A. Hydraulic conduit entrance punchout tools or equivalent shall be used to provide necessary entrances to pull boxes leaving a clean surface area for the insertion of conduit.

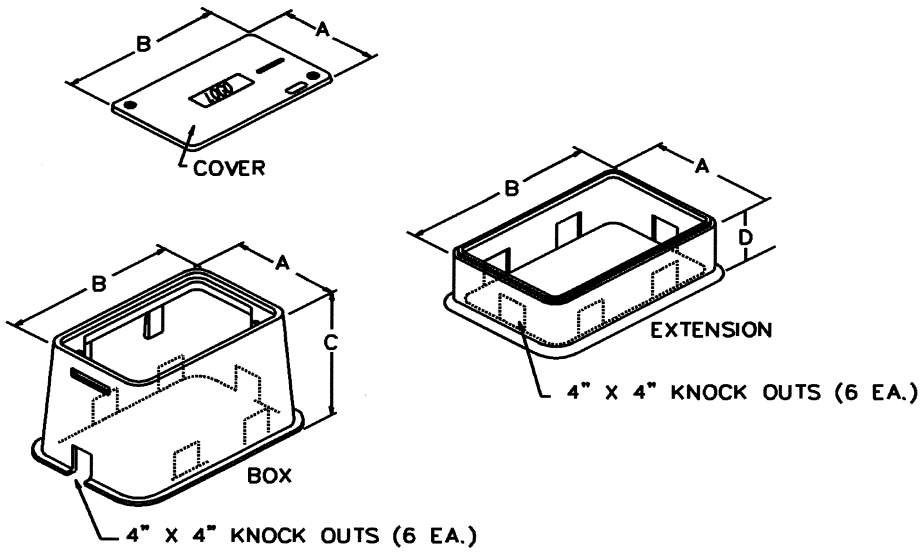

Nominal Dimensions For Pull Boxes

Type	A	B	C	D
Type A (Detector)	13"	18"	24"	12"
Type B (Traffic Signal)	17"	30"	24"	12"
Type C (Communication)	26"	38"	24"	8"

END OF SECTION

SECTION 16711

TRAFFIC SIGNAL CONDUIT

PART 1 GENERAL

1.01 SECTION INCLUDES

All traffic signal conduit installed above ground shall be rigid steel, hot-dipped, galvanized conduit. Underground conduit installed in unpaved areas may be either rigid steel, hot-dipped galvanized conduit or Schedule 80 polyvinyl chloride (PVC) conduit, unless specified on the plans. Underground conduit installed under paved roadways and shoulders shall be rigid steel, hot-dipped galvanized conduit.

Unless otherwise shown on the drawings, all conductors shall be in conduit except when in metal poles. All conduits and fittings shall be of the sizes and types shown on the drawings. Each section of conduit shall bear evidence of approval of Underwriter's Laboratories.

The contractor may, at his own expense, use conduit of larger size than specified on the drawings providing that the larger size is used for the entire length of the conduit run.

1.02 UNIT PRICES

A. Measurement
This Item will be measured by the linear foot of the various sizes and types of conduit installed based on the type of surface as indicated in the bid item. Conduit shall be measured horizontally along the surface from center of pullbox to center of pullbar or foundation. Risers shall be measured as the amount of conduit extending from the ground surface.

B. Payment
The work performed and materials furnished in accordance with this Item and measured as provided under "Measurement" will be paid for at the unit price bid for "Conduit" of the various types and sizes specified. The price shall be full compensation for furnishing and installing conduit; for directional drilling, boring, excavating, furnishing and placing backfill, replacing pavement structure, sod, riprap, curbs or other surfaces; for marking location of conduit (when required); for furnishing and installing all fittings, junction boxes, special radius sweeps, and expansion joints, conduit straps; and for all labor, tools, equipment and incidentals necessary to complete the work.

PART 2 PRODUCTS

2.01 MATERIALS

A. Electrical PVC Conduit - The use of Electrical PVC conduit will be allowed as long as all guidelines set forth in the NEC (National Electrical Code) book are followed. Schedule 80 Electrical PVC will only be used in pertinent applications. In locations above the ground, rigid metal conduit will be used. All grounding procedures set forth in the NEC shall be followed.

PVC conduit shall be joined by solvent-weld method in accordance with the conduit manufacturers recommendation. No reducer couplings shall be used unless specifically indicated on the drawings.

B. Rigid Steel, Hot-Dipped, Galvanized Conduit

1. All conduit shall be of mild steel piping, galvanized inside and outside, and shall conform in all respects to the Federal Specification WW-C-581c, American Standard Rigid Steel Conduit Specification C80.1, latest revision, and Underwriters' Laboratories Specifications.

2. Trade Names - Conduit manufactured by Clifton, Pittsburg-Standard, Triangle or Youngstown conforms to the provisions of this specification. Other brands of rigid steel, hot dipped, galvanized electrical conduit may be approved by the engineer provided samples and engineering data submitted by the bidder equal the provisions of this specification.

3. Protective Coating - The galvanized coat of zinc shall be of uniform thickness, not less than 0.0008 inch, applied by the hot-dipped process to not only the inside and outside surfaces of the conduit, but also to the threads of the conduit.

4. Threading and Reaming - Each piece of conduit shall be straight, free from blisters and other defects, cut square and taper reamed, and furnished with coupling in 10 ft. lengths threaded each end. The interior threaded surface of each coupling shall be galvanized to insure 100% galvanic protection when coupled together with lengths of hot-dipped rigid conduit with hot-dipped galvanized threads.

5. Rigid Elbows - Rigid standard and special radius elbows shall be made from the same grade of mild steel piping as rigid steel conduit. They shall be galvanized so that not only the exterior and interior surfaces shall have a galvanized coating but also the threaded area, thereby insuring 100% galvanic protection on all surfaces.

6. Chemical Test for Coating - The hot galvanized coating shall be of such quality and uniformity that a sample of hot-galvanized conduit will not show a fixed deposit of copper after four (4) immersions or dips in a standard copper sulfate solution.

7. Bending Test - The hot-galvanized coating on the inside and outside surfaces shall be sufficiently elastic to prevent cracking or flaking when a sample of finished conduit is bent 90 degrees, at a minimum bend of 60 degrees inner edge of the bend of six (6)

times the inside diameter of the conduit. For conduits two (2) inches in diameter, or smaller, special eighteen (18) inch minimum radius sweeps shall be furnished and installed by the contractor.

PART 3 EXECUTION

3.01 CONSTRUCTION METHODS

A. General - The contractor shall familiarize himself with the provisions of the General and Special Conditions in regard to permits, codes, laws and ordinances, and these provisions shall be controlling factors, except as specifically noted otherwise or supplemented herein.

All work shall be done in accordance with the latest rules and regulations of the National Board of Fire Underwriters, the National Electrical Safety Code and all local ordinances.

B. Coordination - The work shall be carefully coordinated with work of other trades. Wherever work covered under this item, the order of work shall be carefully scheduled and coordinated to secure the completion of the various portions in the best possible manner. The rights of the various interests and the sequence when in dispute, shall be established by the Engineer and his instructions as to priority and scheduling shall be final and binding.

C. Placement - All joints in conduit shall be cut square, reamed smooth and drawn up tight. Concealed conduit shall run in as direct a manner as practicable, with maximum radius bends. All bends shall be free from dents or flattening. Not more than the equivalent of three quarter bends (two hundred seventy degrees) shall be used in any run between terminals, outlets and junction or pull boxes. Conduit joints shall be made with approved couplings and unions; where conduit cross expansion joints, expansion fittings shall be installed. Conduit runs underground shall be installed a minimum of 24 inches below finished grade, except where it is impossible or impractical. The Engineer or approved designer shall be the sole judge of the permissible depth of conduit installation. The conduit shall be installed as shown on the plans or as directed by the Engineer. Each conduit run shall be swabbed after installation, and a No. 9 galvanized steel pull wire shall be inserted in each conduit and folded in a manner making it easy to retrieve from each end. The conduit ends shall be capped or plugged until cabling and wiring operations commence.

Upon request of the Engineer, the contractor shall draw a full-time metal brush, attached by swivel joint to a pull tape through "metal conduit" and a special template having a diameter not less than 75 percent of the inside diameter through PVC conduits to insure that the conduit is clean and free from obstructions. A nylon or non-metal pull tape shall be used in pulling cable and conductors through PVC conduit. Metal tapes will not be permitted in PVC conduit. The conduits shall be placed as shown on the drawings or as directed by the Engineer.

Conduit placed for concrete encasement shall be secured and supported in such a manner that the alignment will not be disturbed during placement of the concrete. No concrete shall be placed until all of the conduit ends have been capped and all box openings closed.

PVC conduit which is placed under existing pavement, sidewalks, and driveways shall be placed by first providing a void through which the PVC conduit shall be inserted. Boring is required for placing conduit under pavements. Metal conduit which is to be placed under existing pavement, sidewalks, and driveways shall be placed by boring.

Existing conduit which has been placed in position on the job site by others for this installation shall be checked to see that there are no obstructions in the conduit prior to threading the wire through. Any such obstructions shall be cleared without damage to the conduit, prior to installing cable.

Conduit runs shall be installed in such a manner as to minimize the accumulation of moisture at low points and pockets.

The components parts of conduits systems shall, in general, be of like material. Where dissimilar metals are used together, suitable provisions shall be made to prevent galvanic action.

The ends of all conduit runs shall be closed immediately after installation to prevent the accumulation of water, dirt and other foreign material. Conduit shall be swabbed out where necessary before conductors are pulled in. Bends may be either factory or field made. All 2 inch conduits shall be placed with special radius sweeps with a minimum radius of 18 inches. Standard bends shall not be allowed with 2 inch conduits.

D. Bonding

A No. 8 solid soft bare copper bond wire shall be installed in each conduit. This bond wire shall be firmly attached to the grounding rod installed in each pull box and cabinet. The bond wire shall create a continuous grounding system for the entire conduit system. All conduits, including rigid metal, shall be bonded together with a No. 8 solid bare copper wire and have continuity to every ground rod installed at each signal installation.

E. Pull Rope

A 5/16 inch nylon pull rope shall be installed in each conduit installed. A minimum of three feet of pull rope shall be coiled in each pullbox and cabinet.

F. Sealing

After installation of cables and wires the conduits shall be sealed with a suitable compound so as to prevent the entrance of moisture or gases.

END OF SECTION

SECTION 16715

VEHICLE SIGNAL HEADS
(POLYCARBONATE)
(ADJUSTABLE, EXPANDABLE TYPE)

PART 1 GENERAL

1.01 SECTION INCLUDES

A. Polycarbonate Vehicle Signal Heads with mounting attachments and light emitting diode (LED) lamp indications, louvered back plates, and Geometrically Programmed Louvers (GPL).

1.02 MEASUREMENT AND PAYMENT

A. Unit Prices.

1. Payment for Vehicle Signal Heads will be measured by each vehicle signal head assembly required with specified mounting hardware. Vehicle Signal Heads shall consist of one (1) or more sections with visor(s), mounting hardware, LED indication color(s) specified and louvered back plates. The Vehicle Signal Head housings, doors and visors shall be Federal Highway Yellow.

2. Payment for Geometrically Programmed Louver (GPL) and adjustable full-circle visor will be measured as each unit required.

3. Payment for the work performed and materials furnished in accordance with this item will be paid for at the unit price bid for "Vehicle Signal Head", of the various configurations complete with LED indication(s) and mounting hardware and louvered back plates as specified.

PART 2 PRODUCTS

2.01 MATERIALS

A. The traffic control signal heads shall be in accordance with the latest revision of ITE Technical Report No. 1.

B. Each traffic signal face shall consist of one or more signal sections rigidly fastened together as per manufacturer's recommendations in such a manner as to present a continuous pleasing appearance.

C. The electric and optical system of the signal head shall, unless otherwise specified, be designed for operation from a power supply of 115 volt, single phase, 60 Hz alternating current and LED displays.

D. Polycarbonate shall be used in fabricating the vehicle signal heads described herein. Structural requirements for polycarbonate materials are described in Paragraphs. 2.02 and 2.03

E. All material for the mounting attachments shall be metal.

2.02 HOUSINGS

A. The polycarbonate vehicle signal head housing cases shall be a one-piece polycarbonate resin material with sides, top, and bottom integrally molded. The housing shall be injection molded from ultraviolet and heat stabilized flame retardant, permanently colored polycarbonate resins. The housing shall be a minimum of 0.125 inches (3.18 mm) thick measured anywhere on the housing, and shall be internally ribbed so as to produce the strongest possible assembly consistent with lightweight. The terminal block shall either be securely mounted or integrally molded into the housing.

B. Provision shall be made for accommodation of the particular type of mounting specified and attachment of doors, optical units, and other such accessories as may be specified for the particular installation. All traffic signal housing cases, together with doors, lenses, and mounting attachments, shall comprise a dust and moisture proof housing for the optical units, connecting wiring, and terminal block. The housing cases shall be of such construction as to assure permanent alignment of the lens in the traffic signal face. Design of door, housing, and visor shall be such that no light is visible in the profile view of the traffic signal face.

C. Vehicle Signal Head housing cases shall be of the sectional, adjustable, expandable type. The assembled housings for each signal face shall consist of three or more individual dual sections, each designed for housing a single complete optical unit. Individual signal sections shall be rigidly attached to form a single head either with at least four machine screws between each section or by the bolt-and-washer conduit method. Complete signal heads shall provide positive locked positioning when used with serrated brackets, mast arm, or span wire fittings.

D. Portions of cases providing for attachment to supporting arms shall be molded with large bosses for the supporting arms. Each housing case shall be so attached to its supporting arm that it will be adjustable by rotation about its vertical axis in such a manner that any pair of adjacent cases may be adjusted individually to give indications in two directions as close as 15 degrees apart and may be rigidly clamped in any position throughout the range of

adjustment. Provision shall be made for carrying the traffic signal leads enclosed in the mounting attachment.

E. Both the top and bottom of each traffic signal housing case shall be provided with an opening of two inches (50 mm) in diameter to accommodate 1-1/2" (38 mm) pipe brackets. A locking ring shall be integrally cast or molded around the bottom opening. Around the top opening shall be either an integrally cast or molded locking ring or a separate splined locking ring designed to fit into notches. The locking rings shall have a minimum of 72 evenly spaced teeth and shall be so designed that the top and bottom rings will mate to provide a perfectly aligned signal head with flush connection between the outer circumference of the sections.

F. Any open end of an assembled signal housing shall be plugged with an ornamental cap and gasket of an approved type.

2.03 HOUSING DOOR

A. The housing door of each traffic signal housing shall be a one one-piece polycarbonate resin material with an approximate 12-inch (300 mm) diameter circular opening for the lens as specified. The housing door shall be a minimum of 0.125 inches (3.18mm) thick measured anywhere on the housing door. The door shall be attached to the housing by means of two stainless steel hinge pins.

B. Two stainless steel wing screws shall be installed on the side of the door to provide for opening and closing the door without the use of special tools. Wing screws shall have a flat-bearing surface or stainless steel flat washer to prevent gouging of the housing door by the wing screws. Wing screws shall remain captive in the housing door when the door is open.

2.04 VISORS

A. Each traffic signal housing door shall be equipped with an easily detachable standard tunnel visor (unless requested otherwise). The visor shall be a polycarbonate resin to match the housing and door. The visor shall be rigidly attached to the door with rust-resistant connections in a manner that will prevent the leakage of light and moisture throughout the periphery of attachment.

B. Unless requested otherwise , the visor on the front of each door shall:

1. Be circular in section

2. Have a downward tilt of 2 to 8 degrees

3. Encompass approximately 300 degrees of the lens

4. Extend outward from the face of the lens a minimum of 9-1/2" (240 mm) for 12-inch (300 mm) diameter lens, (measured at its outer visible circumference)

5. Be of such design that the encircled portion of the lens will not be visible in the profile view of the traffic signal face

6. Be open at the bottom so as to prevent the accumulation of snow, dirt, and rain.

C. Visors shall be easily removed and replaced without damage to visor or signal head.

D. The four (4) tabs used to mount the visor to the signal shall be slotted. It shall not be necessary to completely remove the mounting screws to remove or replace the visor.

2.05 OPTICAL SYSTEM

A. The Vehicular Light Emitting Diode (LED) Indications to be furnished with the Vehicle Signal Head shall meet the requirements of Specification Section 16718, "Vehicular LED Indications".

2.06 TERMINAL BLOCKS AND ELECTRICAL

A. Terminal blocks shall be either two or seven position and be double row, with each section consisting of two 8-32 x 5/16-in. binding screws and a conducting metal strip between the screws.

B. The terminal blocks shall be a one-piece molded construction using phenolic materials, rated for a minimum 20 amps, 250 volt service

C. Each LED module shall be wired to a two position terminal block located in that signal section. A seven position terminal block shall be furnished in the outermost signal section of any 3 or more section vehicle signal head assembly. All sections of the vehicle signal head assembly shall be wired to the seven position terminal block. All terminal blocks shall be securely mounted in an accessible position and shall be of weatherproof-molded construction, equipped with identified terminals. Binding screws shall be provided for the field and interior wires.

D. Maintain throughout the vehicle signal head the color coding for wires from the LED Module to the main terminal block as shown below:

Indication	**Color Code**
Red Ball / Arrow	Red
Yellow Ball	Yellow

Green Ball	Green
Yellow Arrow	Yellow with Blue or White Tracer
Green Arrow	Green with Blue or White Tracer
Neutral	White

2.07 MOUNTING ATTACHMENTS

A. All mounting attachments shall be aluminum. Provision shall be made for carrying the signal leads enclosed in the mounting attachment. The mounting attachment, together with supporting arms and assembled housings, shall comprise a dust-and-moisture-proof enclosure for optical units and lead wiring. Mounting attachments shall be of one of the following types as specified for the particular vehicle signal head required.

1. Span-Wire Mounting. The span-wire mounting attachment shall consist of a cable clamp to receive a suspension cable of 3/8" (10 mm) diameter together with a suitable connection to the signal head. The mounting shall provide a "balance adjuster" between the signal head and span wire capable of permitting freedom of movement with reference to the point of suspension. The signal head shall be adjustable by rotation about its vertical axis in a horizontal plane and the mounting attachment shall be so constructed that the head may be firmly clamped in any position throughout the range of adjustment. The mounting shall provide a suitable outlet for wiring from the signal head tilted downward and so constructed as to effectively seal the interior of the head from dust and moisture and prevent undue abrasion of signal wiring. Mountings for signal head units not balanced at the point of support shall be provided with a suitable compensating device to insure that the signal head will assume a normally vertical position.

2. Mast-Arm Mounting. The mast-arm vehicle signal head mounting hardware shall be Astro-brac Tenon Mount bracket assembly, or approved equal.

3. Side-of-Pole Mounting. Supports for side-of-pole mounting of the signal head in a vertical position shall be 1-1/2" standard pipe bracket arms, attached to the top and bottom of the signal head with pipe nipples, serrated elbows and collared / cast nipples and band-on pole plates. Pole plates shall be provided with a cable guide. The mounting assembly shall consist of two standard pipe sections extending 12-3/4" from and at right angles to the axis of rotational adjustment of the signal head. Both supports shall have running threads at least 1-1/4" long at the pole connection end. The signal head shall be adjustable, by rotation of the various signal faces about their vertical axis, throughout a radial angle of 360 degrees and shall be capable of being rigidly clamped in any position through the range of adjustment. The wiring from the signal head shall be able to be enclosed in the top or bottom support.

2.08 LOUVERED VEHICLE SIGNAL HEAD BACK PLATE

A. The back plate shall be attached to all new vehicle signals. Back plate shall be continuously louvered around its perimeter.

B. Back plates shall be vacuum formed ABS plastic or aluminum.

C. Vacuum formed ABS plastic back plates shall contain ultraviolet inhibitors and stabilizers for protection against UV degradation.

D. The back plate shall extend around the periphery of the signal face a distance of five (5) inches for faces with twelve (12) inch lenses, and shall have a 3" corner radius.

E. ABS vacuum formed back plates shall be black and color consistent throughout the entire piece without varying shades and tones.

F. The louvers shall be evenly spaced around the back plate, including the top and bottom. The number of louvers adjacent to the vehicle signal head shall be nine (9) per signal section per side. Both the top and bottom back plate sections shall have nine (9) louvers each. The louvers shall be at least 3-1/2" long by 5/8" wide with an opening of at least ¼". The back plate shall be pre-drilled to fit the vehicle signal head for which it is designed.

G. ABS vacuum formed back plates shall have a minimum thickness of .125". All outside edges shall be formed with a ½" to 5/8" flange (inside dimension) turned away from the front surface. The back plate shall have a haircell finish on the front side and smooth finish on the back side.

H. Aluminum back plates shall be fabricated from anodized sheet aluminum and be painted dull black.

I. Stainless steel hardware for attaching the back plate to the vehicle signal head shall be provided.

2.09 GEOMETRICALLY PROGRAMMED LOUVER (GPL)

A. The louver shall have the following capabilities:

1. Fit all manufacturers' 12" vehicle signal heads.
2. Retrofit into existing 12" vehicle signal heads.
3. Provide a full round ball display, with minimum slat effect, throughout the selected view range.
4. Provide an absolute exact visual cut-off.
5. Allow the view angle within each signal section to be adjusted to a designated area.

6. Have minimum glow outside the view range.
7. Allow for controlling either the horizontal or vertical view range within the signal visor.

B. The louver housing shall consist of a two-piece assembly injection molded from black UV inhibited ABS plastic. Two (2) brass inserts shall be molded into the bottom half allowing the assembly to be fastened together with two (2) stainless steel screws.

C. The louver housing O.D. shall be 11-1/2" and have spherical contour which allows the light beam from the signal section to be directed up to 10-degrees in all directions from the centerline of the visor/lens system.

D. The inside surface shall have a multiplicity of grooves for positioning light directing baffles. The remaining inside surface shall be grooved to prevent surface reflections of light.

E. Two (2) sponge neoprene O-rings shall be positioned in grooves on the outside surface to prevent light leakage between the housing and the visor.

F. The louver housing design shall allow the baffle positions to be changed in order to adjust the view angle.

G. The baffles shall be molded from flat black, 10% glass filled UV inhibited virgin polycarbonate.

H. Each baffle shall be thin opaque disc with a multiple of parallel evenly spaced apertures (openings). Each structural member forming the aperture shall have a cross section which allows for good stiffness and structural integrity, but shall have a thin edge to prevent reflection (glow) outside the desired viewing range.

I. All baffles shall be identical in design and interchangeable within the housing. The plane of each baffle shall be 90-degrees to the centerline axis of the housing.

J. The louver shall be supplied with the necessary self-threading screw hardware to attach the louver to the vehicle signal head visor.

K. The louver shall include an installation kit that includes installation instructions, adjustment tool, visor marking template, and all incidentals necessary for attachment and positioning of the louver.

END OF SECTION

SECTION 16716

PEDESTRIAN SIGNAL HEADS

PART 1 GENERAL

1.01 SECTION INCLUDES

A. Pedestrian Signal Heads with mounting attachments and light emitting diode (LED) lamp indications.

1.02 MEASUREMENT AND PAYMENT

A. Unit Prices.

1. Pedestrian Signal Heads will be measured by each pedestrian signal head assembly required with specified mounting hardware. Pedestrian Signal Heads shall consist of each pedestrian signal housing assembly with mounting hardware and LED indications. The Pedestrian Signal Head housing shall be Federal Highway Yellow.

2. Payment for the work performed and materials furnished in accordance with this item will be paid for at the unit price bid for "Pedestrian Signal Head", complete with LED indications and mounting hardware as specified.

PART 2 PRODUCTS

2.01 MATERIALS

A. Manufacturers/suppliers furnishing these items shall be experienced in design and construction of such items and shall furnish evidence of having supplied similar items, which have been in successful operation for not less than three (3) years.

B. The lamp units shall be a single, self-contained device, not requiring on-site assembly for installation into an existing traffic signal housing. If proper orientation of the lamp units are required for optimum performance, prominent and permanent directional markings, i.e., UP ARROW or the word UP or TOP, for correct indexing shall be clearly marked on each unit as to configuration and mounting orientation.

2.04 GRID TYPE PEDESTRIAN SIGNAL – LED

It is the intent of this specification to describe minimum acceptable design and operating requirements for an LED illuminated grid type pedestrian signal.

A. General Design Requirements

1. Design, material and construction of LED pedestrian signal heads shall be in accordance with requirements set forth in "Adjustable Face Pedestrian Head Standard", of the Institute of Transportation Engineers and the "Texas Manual on Uniform Traffic Control Devices", latest revision.

2. The general construction shall include a single-piece cast aluminum housing, a solid state LED indication, message lens, a single-piece cast aluminum swing down door frame, a blank out Z-crate type sun visor, and appropriate other hardware. The design shall optimize performance per unit of energy consumed.

3. Optically, the pedestrian signal shall be capable of displaying brightly and uniformly, while being subject to strong ambient light conditions, the alternate symbol messages "HAND" and countdown numbers in Portland orange, and "WALKING PERSON" in lunar white. Under the same strong ambient light conditions, the messages shall blank out when signal is not energized.

4. The maximum overall dimensions of the signal housing shall be 19 inches wide, 18-3/4 inches high, and 9-1/2 inches deep including the Z-crate type sun visor and hinges.

B. Mechanical Construction

1. The housing shall be one-piece, corrosion-resistant, die-cast aluminum alloy.

2. The housing shall be designed in such a way that all components and wiring are readily accessible by means of a hinged door and legend cover plate of the full size of housing face.

3. Gasketing material suitable to maintain weather, dust-tight seal about door and cover plates shall be used.

4. The door frame shall be a one-piece, corrosion-resistant aluminum alloy die casting, complete with two-hinged lugs at the bottom and two-latch slots cast at the top of each door. Hinge pins shall be corrosion-resistant material. Two stainless steel wing nuts and washers shall be attached to the top of the cast with the use of stainless steel spring pins. Latching or unlatching of the door shall require no tools.

C. Z-Crate Visor

1. The face of the signal shall be furnished with suitable Z-crate visor baffle designed to prevent false indications, due to sunlight or other reflections, without the use of hoods.

2. The visor baffle shall have a high-grade, flat black finish.

D. Optical System-LED Pedestrian Signals

1. The LED indications to be furnished with the Pedestrian Signal Heads shall meet the requirements of Specification Section 16719, "Pedestrian & Countdown Signal Module".

E. Wiring

1. All wiring shall be Underwriters' Laboratories (UL) approved for voltages involved. Terminals for field wiring shall be suitable for #14 AWG wire.

2. Barrier type terminal block, minimum twelve (12) terminal plates with two (2) binding screws each, shall be mounted in each housing.

F. Mounting Attachments

1. Side-of-Pole Mounting. Supports for side-of-pole mounting of the signal head in a vertical position shall be 1-1/2" standard pipe bracket arms, attached to the top and bottom of the signal head with pipe nipples, serrated elbows and collared / cast nipples and band-on pole plates. Pole plates shall be provided with a cable guide. The mounting assembly shall consist of two standard pipe sections extending 12-3/4" from and at right angles to the axis of rotational adjustment of the signal head. Both supports shall have running threads at least 1-1/4" long at the pole connection end. The signal head shall be adjustable, by rotation of the various signal faces about their vertical axis, throughout a radial angle of 360 degrees and shall be capable of being rigidly clamped in any position through the range of adjustment. The wiring from the signal head shall be able to be enclosed in the top or bottom support.

G. Painting

Pedestrian signal housing and mounting attachments shall be available in two finishes.. If no color is indicated, a yellow coating, as specified below, shall be furnished.

1. Federal Highway Yellow Finish: Signal housing and mounting attachments shall be primed and electrostatically finished with a yellow coating, except for baffle with paint finish. Finish shall be cured for minimum of twenty (20) minutes at 350 degrees F.

2. Flat Black Finish: Signal housing and mounting attachments shall be primed and finished with a flat black paint finish. Finish shall be cured for a minimum of twenty (20) minutes at 350 degrees F.

END OF SECTION

SECTION 16718

VEHICLE TRAFFIC CONTROL SIGNAL HEADS – Light Emitting Diode (LED) Circular Signal Supplement

PART 1 GENERAL

1.01 SECTION INCLUDES

The purpose of this specification is to provide the minimum performance requirements for a 300 mm (12 in) Light Emitting Diode (LED) vehicle traffic signal module while in service. This specification is not intended to impose restrictions upon specific designs and materials that conform to the purpose and the intent of this specification. This specification is not restricted to any specific LED technology.

1.02 DEFINITIONS

A. Catastrophic Failure: The total loss of visible illumination from an LED light source.

B. Chromaticity: The color of the light emitted by a module, specified by the *x*, *y* chromaticity coordinates on the 1931 Commission Internationale d'Eclairage (CIE) chromaticity diagram.

C. Conditioning: Energizing a LED signal module at a specified ambient temperature for a specified period of time, to cause any early electronic component mortality failures to occur and to detect any component reliability problems.

D. Duty Cycle: The amount of time during a specified time period that a module is energized, expressed as a percent of the specified time period.

E. Hard Coat: A surface coating or film to provide front surface abrasion resistance.

F. LED Light Source: A single light emitting diode (LED) or an array of LEDs.

G. LED Signal Module (module): A signaling unit comprised of an array of LEDs and related power supply, and any required lenses, which, when connected to appropriate power, provides a circular signal indication.

H. Luminance: The luminous flux emitted or reflected from a surface, in a given direction, per unit solid angle, divided by the area of the surface, expressed as cd/m^2.

I. Luminous Intensity: The luminous flux emitted in a given direction from a source, per unit solid angle, expressed in candelas (cd).

J. Minimum Maintained Luminous Intensity: The minimum luminous intensity a module is required to provide throughout service as a traffic control signal.

K. Nominal Operating Voltage: The AC RMS voltage, 120 VAC, at which photometric performance and power consumption are specified.

L. Power Consumption: The electrical power in Watts consumed by a module when operated at nominal operating voltage and ambient operating temperature range.

M. Power Factor: The power factor equals Watts divided by Volt-Ampere or the ratio of power consumption in Watts to Volt-Amperes.

N. Total Harmonic Distortion (THD): THD is the ratio of the root-mean-square (RMS) value of the harmonics to the amplitude of the fundamental component of the AC waveform.

O. Translate: To move an object along a linear vector, such that the orientation of the object does not rotate relative to the original frame of reference.

P. Turn OFF Time: The amount of time required after removal of the nominal operating voltage for the LED signal module to show no visible illumination.

Q. Turn OFF Voltage: The voltage below which the LED signal module emits no visible illumination.

R. Turn ON Time: The amount of time required for the LED signal module to reach 90% of full illumination.

S. Volt-Amperes: The product of the root-mean-square (RMS) line voltage and RMS line current, measured with true RMS meters.

T. Diffused: Lens must be designed to diffuse the light form the LED array over the surface of the lens.

1.03 ENVIRONMENTAL REQUIREMENTS

A. All exposed components of a module shall be suitable for prolonged exposure to the environment, without appreciable degradation that would interfere with function or appearance. As a minimum, selected materials shall be rated for service for a period of a minimum of 72 months in a south-facing Arizona Desert installation.

B. A module shall be rated for use throughout an ambient operating temperature range, measured at the exposed rear of the module, of -40°C (-40°F) to +74°C (+165°F).

C. A module shall be protected against dust and moisture intrusion, including rain and blowing rain.

D. The module lens shall not crack, craze or yellow due to solar UV irradiation typical for a south-facing Arizona Desert installation after a minimum of 72 months in service.

PART 2 PRODUCTS

2.01 MATERIALS

A. LED SIGNAL MODULE

1. A module shall be capable of replacing the existing optical components or signal module in a signal housing, or shall provide a complete replacement of the signal head.

2. The module lens shall be hard coated or otherwise made to comply with the material exposure and weathering effects requirements of the Society of Automotive Engineers (SAE) J576.

3. The module lens supplied shall be covered by transparent film or materials with similar color and transmissive characteristics.

4. The module lens may be a replaceable part, without the need to replace the complete LED signal module. Removal of lense will be with simple hand tools and such that no inclusion of additional adhesive, sealants, etc will be required to provide replacement of lense.

5. Materials used for the lens and module construction shall conform to ASTM specifications for the materials, where applicable.

6. Lens must diffuse the LED array over the entire surface of the lens.

7. LED Modules used for arrows must meet same photometric and chromaticity requirements as circular modules. (optional)

8. Enclosures containing either the power supply or electronic components of the signal module shall be made of UL94 flame retardant materials. The module lens is excluded from this requirement.

2.02 MODULE IDENTIFICATION

A. Each module shall be identified on the backside with the manufacturer's name, model, operating characteristics and serial number. The operating characteristics identified shall

include the nominal operating voltage and stabilized power consumption, in watts and Volt-Amperes.

B. Modules and removable lenses shall have a prominent and permanent vertical indexing indicator, i.e., UP Arrow, or the word UP or TOP, for correct indexing and orientation in the signal housing.

C. Modules conforming to all non-optional requirements of this specification may have the following statement on an attached label: "Manufactured in Conformance with the COH LED Circular Signal Supplement."

2.03 PHOTOMETRIC REQUIREMENTS

A. Luminous Intensity, Uniformity & Distribution.

1. Minimum maintained luminous intensity: When operated under the conditions defined in Sections 1.03-B and 2.04-A-1, the luminous intensity values for modules shall not be less than the values calculated using the method described below for a minimum period of 72 months.

2. Calculate the vertical intensity factor ($f(I_{Vert})$) for the range from 12.5 degrees up (+12.5) to 27.5 degrees down (-27.5), using the appropriate equation:

For $\theta_{Vert} > -2.5$ degrees:

$$f(I_{Vert}) = 0.05 + 0.9434 * e^{-\left(\frac{\theta_{Vert}+2.5}{5.3}\right)}$$

For $\theta_{Vert} \leq -2.5$ degrees:

$$f(I_{Vert}) = 0.26 + \left(\frac{\theta_{Vert}}{143}\right) + 0.76 * \left[e^{-0.02(\theta_{Vert}+2.5)^2}\right]^{(-0.07*\theta_{Vert})}$$

where: θ_{Vert} is the angle measured above or below a horizontal plane perpendicular to the face of the module lens. (Note: angles above the horizontal plane are positive, while angles below the horizontal plane are negative.)

3. Calculate the horizontal intensity factor ($f(I_{Horiz})$) for the range from 27.5 degrees left to 27.5 degrees right:

$$f(I_{Horiz}) = 0.05 + \left(0.95 * e^{\left(-\frac{1}{2} * \left(\frac{\theta_{Horiz}}{11}\right)^2\right)}\right)$$

where: θ_{Horiz} is the angle measured from a vertical plane to the left or right, perpendicular to the face of the module lens.

4. Select the appropriate peak minimum maintained luminous intensity value for the specified module size and color:

Peak minimum maintained luminous intensity values, at θ_{Vert} = –2.5 deg and θ_{Horiz} = 0 deg [$\mathbf{I}_{(-2.5,\ 0)}$], by size and color of the module are:

Color	$\mathbf{I}_{(-2.5,\ 0)}$ 200m	300m
Red	165 cd	365 cd
Yello	410 cd	910 cd
Green	215 cd	475 cd

5. Multiply the vertical intensity factor times the horizontal intensity factor (for the selected pair of angles). Round the result to two significant figures, and multiply the combined angular intensity factor times the peak minimum maintained luminous intensity value for the appropriate signal size and color:

$$I_{(\theta vert,\ \theta horiz,\ size,\ color)} = [f(I_{Vert}) * f(I_{Horiz})] * I_{(-2.5,\ 0)}$$

The resultant value of the luminous intensity shall be rounded to the nearest whole number.

Example: What is the minimum maintained luminous intensity value for a green, 300 mm LED signal light at 5 degrees down and 10 degrees left?

$$I_{(-5,\ 10,\ 300,\ Green)} = [f(I_{vert\ =\ -5})*f(I_{horiz\ =\ 10})]*475\ cd$$
$$I_{(-5,\ 10,\ 300,\ Green)} = [0.953*0.678]*475\ cd$$
$$I_{(-5,\ 10,\ 300,\ Green)} = 0.65*475 = 309\ cd$$

6. Table 1 located at end of spec., provides the minimum maintained luminous intensity values, over the required angular range, at 5-degree increments. Note that the horizontal limitations vary for various vertical angles (e.g.: at $\theta_{Vert} = +12.5$ degrees, requirements are only specified from 7.5 degrees right to 7.5 degrees left, while at $\theta_{Vert} = -12.5$ degrees, the horizontal limitations are from 27.5 degrees right to 27.5 degrees left). Table 2 located at end of spec, provides the minimum maintained luminous intensity values, over the required angular range, at 2.5-degree increments. Tables 1 and 2 are provided to illustrate the minimum required values at certain specific angles within the required angular range of performance (i.e. while testing for light output compliance of a module in a laboratory, an agency may use Table 1, and/or other specific pairs of vertical and horizontal angles of its choosing within the required angular range.) One must use the procedure outlined above for determining the minimum maintained luminous intensity values at any specific pairs of vertical and horizontal angles within the required angular range.

7. Maximum permissible luminous intensity: When operated within the temperature range specified in Section 1.03-B, the actual luminous intensity for a module shall not exceed three times the required peak value of the minimum maintained luminous intensity for the selected signal size, and color.

8. Luminance uniformity: The uniformity of the signal output across the entire module lens shall not exceed a ratio of 10 to 1 between the maximum and minimum luminance values (cd/m^2).

B. CHROMATICITY

1. Color regions: The measured chromaticity coordinates of modules shall conform to the following color regions, based on the 1931 CIE chromaticity diagram (see Figure 1):

Red: $y = 0.308$; $y = 0.953 - 0.947x$; $y = 0.290$:

Point	Red	
	X	*y*
1	0.692	0.308
2	0.681	0.308
3	0.700	0.290
4	0.710	0.290

Yellow: $y = 0.151 + 0.556x$; $y = 0.972 - 0.976x$; $y = 0.235 + 0.300x$:

Point	Yellow	
	X	*Y*
1	0.545	0.454
2	0.536	0.449
3	0.578	0.408
4	0.588	0.411

Green: $y = 0.655 - 0.831x$ $x = 0.150$; $y = 0.422 - 0.278x$:

Point	Green	
	X	*Y*
1	0.005	0.651
2	0.150	0.531
3	0.150	0.380
4	0.022	0.416

2. Color uniformity: The dominant wavelength for any individual color measurement of a portion of the emitting surface of a module shall be within ±3nm of the dominant wavelength for the average color measurement of the emitting surface as a whole.

2.04 ELECTRIC

All wiring and terminal blocks shall meet the requirements. Two secured, color coded, 600V, jacketed wires, a minimum of 20 AWG and at least 1 meter (39 in) in length, conforming to the NFPA 70, National Electrical Code, and rated for service at +105°C, shall be provided.

A. VOLTAGE RANGE

1. LED signal modules shall operate from a 60±3 Hz AC line power over a voltage range from 80 to 135 VAC RMS.

2. Fluctuations in line voltage over the range of 80 to 135 VAC shall not affect luminous intensity by more than ±10 percent.

3. The module circuitry shall prevent flicker of the LED output at frequencies less than 100 Hz over the voltage range specified in Section 2.04-A-1.

4. Low Voltage Turn OFF: There shall be no visible illumination from the LED signal module when the applied voltage is less than 35 VAC.

5. Turn-ON and Turn-OFF Time: A module shall reach 90% of full illumination (turn-ON) within 75 msec of the application of the nominal operating voltage. The signal shall cease emitting visible illumination (turn-OFF) within 75 msec of the removal of the nominal operating voltage.

B. TRANSIENT VOLTAGE PROTECTION

1. The on-board circuitry of a module shall include voltage surge protection, to withstand high-repetition noise transients and low-repetition high-energy transients.

C. INPUT PROTECTION (optional)

1. At the point of entry to the module for each input provide two 0.5-Ohm, 10-watt wire-wound power resistors with 0.2 micro Henries inductance (one on the AC+ Line & on the AC- Line). Provide one 20 Joule surge arrestor between AC+ to AC-. A 0.68 microfarad capacitor must be placed between AC+ & AC – (between the resistor & arrestor).

D. ELECTRONIC NOISE

1. The LED signal and associated on-board circuitry shall meet the requirements of the Federal Communication Commission (FCC) Title 47, Subpart B, Section 15 regulations concerning the emission of electronic noise by Class A digital devices.

E. POWER FACTOR AND AC HARMONIES

1. Modules shall provide a power factor of 0.90 or greater when operated at nominal operating voltage, and 25°C (77°F).

2. Total harmonic distortion induced into an AC power line by a module at nominal operating voltage, and at 25°C (77°F), shall not exceed 20%.

F. CONTROLLER ASSEMBLY COMPATIBILITY

1. The current draw shall be sufficient to ensure compatibility and proper triggering and operation of load current switches and conflict monitors in signal controller units.

2. Off State Voltage Decay: When the module is switched from the On state to the Off state the terminal voltage shall decay to a value less than 10 VAC RMS in less than 100 milliseconds when driven by a maximum allowed load switch leakage current of 10 milliamps peak (7.1 milliamps AC).

G. FAILED STATE IMPEDANCE

1. The module shall be designed to detect catastrophic loss of the LED load. Upon sensing the loss of the LED load, the module shall present a resistance of at least 250 kΩ across the input power leads within 300 msec. The LED light source will be said to have failed catastrophically if it fails to show any visible illumination when energized according to Section 2.04-A-1 after 75 msec.

PART 3 EXECUTION

3.01 PHYSICAL & MECHANICAL REQUIREMENTS

A. GENERAL

1. Modules shall fit into existing traffic signal housings built to the VTCSH Standard without modification to the housing, or shall be stand-alone units that incorporate a housing meeting the performance and design requirements of the VTCSH Standard.

2. Installation of a module into an existing signal housing shall not require the use of special tools. The module shall connect directly to existing electrical wiring system.

3.02 CONSTRUCTION

A. A module shall be a self-contained device, not requiring on-site assembly for installation into an existing traffic signal housing. The power supply for the module may be either integral or packaged as a separate component. The power supply may be designed to fit and mount inside the traffic signal housing adjacent to the LED signal module.

B. Assembly and manufacturing processes for a module shall be designed to assure all internal LED and electronic components are adequately supported to withstand mechanical shock and vibration due to high winds and other sources.

END OF SECTION

Table 1

Table 1 provides the minimum maintained luminous intensity values for the Section 16718 COH SPEC. LED Circular Signal, for the range from 12.5 degrees above to 22.5 degrees below the horizontal plane, and from 27.5 degrees left to 27.5 degrees right of the vertical plane, at 5 degree increments.
Minimum Maintained Luminous Intensity Values—Section 16718 COH SPEC LED Circular Signal

Vertical Angle	Horizontal Angle	Luminous Intensity (candela)					
		200m (8-inch)			300 mm (12-inch)		
		Red	Yellow	Green	Red	Yellow	Green
+12.5	2.5	17	41	22	37	91	48
	7.5	13	33	17	29	73	38
+7.5	2.5	31	78	41	69	173	90
	7.5	25	62	32	55	137	71
	12.5	18	45	24	40	100	52
+2.5	2.5	68	168	88	150	373	195
	7.5	56	139	73	124	309	162
	12.5	38	94	49	84	209	109
	17.5	21	53	28	47	118	62
	22.5	12	29	15	26	64	33
-2.5	2.5	162	402	211	358	892	466
	7.5	132	328	172	292	728	380
	12.5	91	226	118	201	501	261
	17.5	53	131	69	117	291	152
	22.5	28	70	37	62	155	81
	27.5	15	37	19	33	82	43
-7.5	2.5	127	316	166	281	701	366
	7.5	106	262	138	234	582	304
	12.5	71	176	92	157	391	204
	17.5	41	103	54	91	228	119
	22.5	21	53	28	47	118	62
	27.5	12	29	15	26	64	33
-12.5	2.5	50	123	65	110	273	143
	7.5	40	98	52	88	218	114
	12.5	28	70	37	62	155	81
	17.5	17	41	22	37	91	48
	22.5	8	21	11	18	46	24
	27.5	5	12	6	11	27	14
-17.5	2.5	23	57	30	51	127	67
	7.5	18	45	24	40	100	52
	12.5	13	33	17	29	73	38
	17.5	7	16	9	15	36	19

	22.5	3	8	4	7	18	10
-22.5	2.5	17	41	22	37	91	48
	7.5	13	33	17	29	73	38
	12.5	10	25	13	22	55	29
	17.5	5	12	6	11	27	14
-27.5	2.5	12	29	15	26	64	33
	7.5	8	21	11	18	46	24

Note 1: Luminous intensity values for equivalent left and right horizontal angles are the same.
Note 2: Tabulated values of luminous intensity are rounded to the nearest whole value.

Table 2

Table 2 provides the minimum maintained luminous intensity values for the Section 16718 COH SPEC LED Circular Signal, for the range from 12.5 degrees above to 22.5 degrees below the horizontal plane, and from 27.5 degrees left to 27.5 degrees right of the vertical plane, at 2.5 degree increments.
Minimum Maintained Luminous Intensity Values—Section 16718 COH SPEC LED Circular Signal

Vertical Angle	Horizontal Angle	Luminous Intensity (candela)					
		200m (8-inch)			300 mm (12-inch)		
		Red	Yellow	Green	Red	Yellow	Green
+12.5	0	18	45	24	40	100	52
	2.5	17	41	22	37	91	48
	5	17	41	22	37	91	48
	7.5	13	33	17	29	73	38
+10.0	0	23	57	30	51	127	67
	2.5	23	57	30	51	127	67
	5	21	53	28	47	118	62
	7.5	18	45	24	40	100	52
+7.5	0	31	78	41	69	173	90
	2.5	31	78	41	69	173	90
	5	28	70	37	62	155	81
	7.5	25	62	32	55	137	71
	10	21	53	28	47	118	62
	12.5	18	45	24	40	100	52
+5.0	0	46	115	60	102	255	133
	2.5	45	111	58	99	246	128
	5	41	103	54	91	228	119
	7.5	36	90	47	80	200	105
	10	31	78	41	69	173	90
	12.5	25	62	32	55	137	71
+2.5	0	69	172	90	153	382	200
	2.5	68	168	88	150	373	195
	5	63	156	82	139	346	181
	7.5	56	139	73	124	309	162
	10	46	115	60	102	255	133
	12.5	38	94	49	84	209	109
	15	30	74	39	66	164	86
	17.5	21	53	28	47	118	62
	20	17	41	22	37	91	48
	22.5	12	29	15	26	64	33

0.0	0	106	262	138	234	582	304
	2.5	102	254	133	226	564	295
	5	96	238	125	212	528	276
	7.5	84	209	110	186	464	242
	10	71	176	92	157	391	204
	12.5	58	144	75	128	319	166
	15	45	111	58	99	246	128
	17.5	33	82	43	73	182	95
	20	25	62	32	55	137	71
	22.5	18	45	24	40	100	52

Table 2 (cont'd)

Vertical Angle	Horizontal Angle	Luminous Intensity (candela)					
		200m (8-inch)			300 mm (12-inch)		
		Red	Yellow	Green	Red	Yellow	Green
-2.5	0	165	410	215	365	910	475
	2.5	162	402	211	358	892	466
	5	150	373	196	332	828	432
	7.5	132	328	172	292	728	380
	10	112	279	146	248	619	323
	12.5	91	226	118	201	501	261
	15	71	176	92	157	391	204
	17.5	53	131	69	117	291	152
	20	38	94	49	84	209	109
	22.5	28	70	37	62	155	81
	25	20	49	26	44	109	57
	27.5	15	37	19	33	82	43
-5.0	0	157	390	204	347	865	451
	2.5	153	381	200	339	846	442
	5	142	353	185	314	783	409
	7.5	125	312	163	277	692	361
	10	107	267	140	237	592	309
	12.5	86	213	112	190	473	247
	15	66	164	86	146	364	190
	17.5	50	123	65	110	273	143
	20	36	90	47	80	200	105
	22.5	26	66	34	58	146	76
	25	20	49	26	44	109	57
	27.5	15	37	19	33	82	43
-7.5	0	130	324	170	288	719	375
	2.5	127	316	166	281	701	366
	5	119	295	155	263	655	342
	7.5	106	262	138	234	582	304
	10	89	221	116	197	491	257
	12.5	71	176	92	157	391	204
	15	56	139	73	124	309	162
	17.5	41	103	54	91	228	119
	20	30	74	39	66	164	86
	22.5	21	53	28	47	118	62
	25	17	41	22	37	91	48

	27.5	12	29	15	26	64	33
-10.0	0	89	221	116	197	491	257
	2.5	86	213	112	190	473	247
	5	81	201	105	179	446	233
	7.5	71	176	92	157	391	204
	10	59	148	77	131	328	171
	12.5	48	119	62	106	264	138
	15	38	94	49	84	209	109
	17.5	28	70	37	62	155	81
	20	20	49	26	44	109	57
	22.5	15	37	19	33	82	43
	25	12	29	15	26	64	33
	27.5	8	21	11	18	46	24

Table 2 (cont'd)

Vertical Angle	Horizontal Angle	Luminous Intensity (candela)					
		200m (8-inch)			300 mm (12-inch)		
		Red	Yellow	Green	Red	Yellow	Green
-12.5	0	50	123	65	110	273	143
	2.5	50	123	65	110	273	143
	5	46	115	60	102	255	133
	7.5	40	98	52	88	218	114
	10	35	86	45	77	191	100
	12.5	28	70	37	62	155	81
	15	21	53	28	47	118	62
	17.5	17	41	22	37	91	48
	20	12	29	15	26	64	33
	22.5	8	21	11	18	46	24
	25	7	16	9	15	36	19
	27.5	5	12	6	11	27	14
-15.0	0	30	74	39	66	164	86
	2.5	30	74	39	66	164	86
	5	28	70	37	62	155	81
	7.5	25	62	32	55	137	71
	10	20	49	26	44	109	57
	12.5	17	41	22	37	91	48
	15	13	33	17	29	73	38
	17.5	10	25	13	22	55	29
	20	7	16	9	15	36	19
	22.5	5	12	6	11	27	14
-17.5	0	23	57	30	51	127	67
	2.5	23	57	30	51	127	67
	5	21	53	28	47	118	62
	7.5	18	45	24	40	100	52
	10	17	41	22	37	91	48
	12.5	13	33	17	29	73	38
	15	10	25	13	22	55	29
	17.5	7	16	9	15	36	19
	20	5	12	6	11	27	14
	22.5	3	8	4	7	18	10
-20.0	0	20	49	26	44	109	57
	2.5	20	49	26	44	109	57
	5	18	45	24	40	100	52

	7.5	17	41	22	37	91	48
	10	13	33	17	29	73	38
	12.5	12	29	15	26	64	33
	15	8	21	11	18	46	24
	17.5	7	16	9	15	36	19
-22.5	0	17	41	22	37	91	48
	2.5	17	41	22	37	91	48
	5	15	37	19	33	82	43
	7.5	13	33	17	29	73	38
	10	12	29	15	26	64	33
	12.5	10	25	13	22	55	29
	15	7	16	9	15	36	19
	17.5	5	12	6	11	27	14

Table 2 (cont'd)

Vertical Angle	Horizontal Angle	Luminous Intensity (candela)					
		200m (8-inch)			300 mm (12-inch)		
		Red	Yellow	Green	Red	Yellow	Green
-25.0	0	15	37	19	33	82	43
	2.5	13	33	17	29	73	38
	5	13	33	17	29	73	38
	7.5	12	29	15	26	64	33
-27.5	0	12	29	15	26	64	33
	2.5	12	29	15	26	64	33
	5	10	25	13	22	55	29
	7.5	8	21	11	18	46	24

Note 1: Luminous intensity values for equivalent left and right horizontal angles are the same.
Note 2: Tabulated values of luminous intensity are rounded to the nearest whole value.

Figure 1

Color Regions for LED Traffic Control Signal Lights:

Figure 1 illustrates the acceptable color regions for traffic control signal lights using LED emitters as the light source.

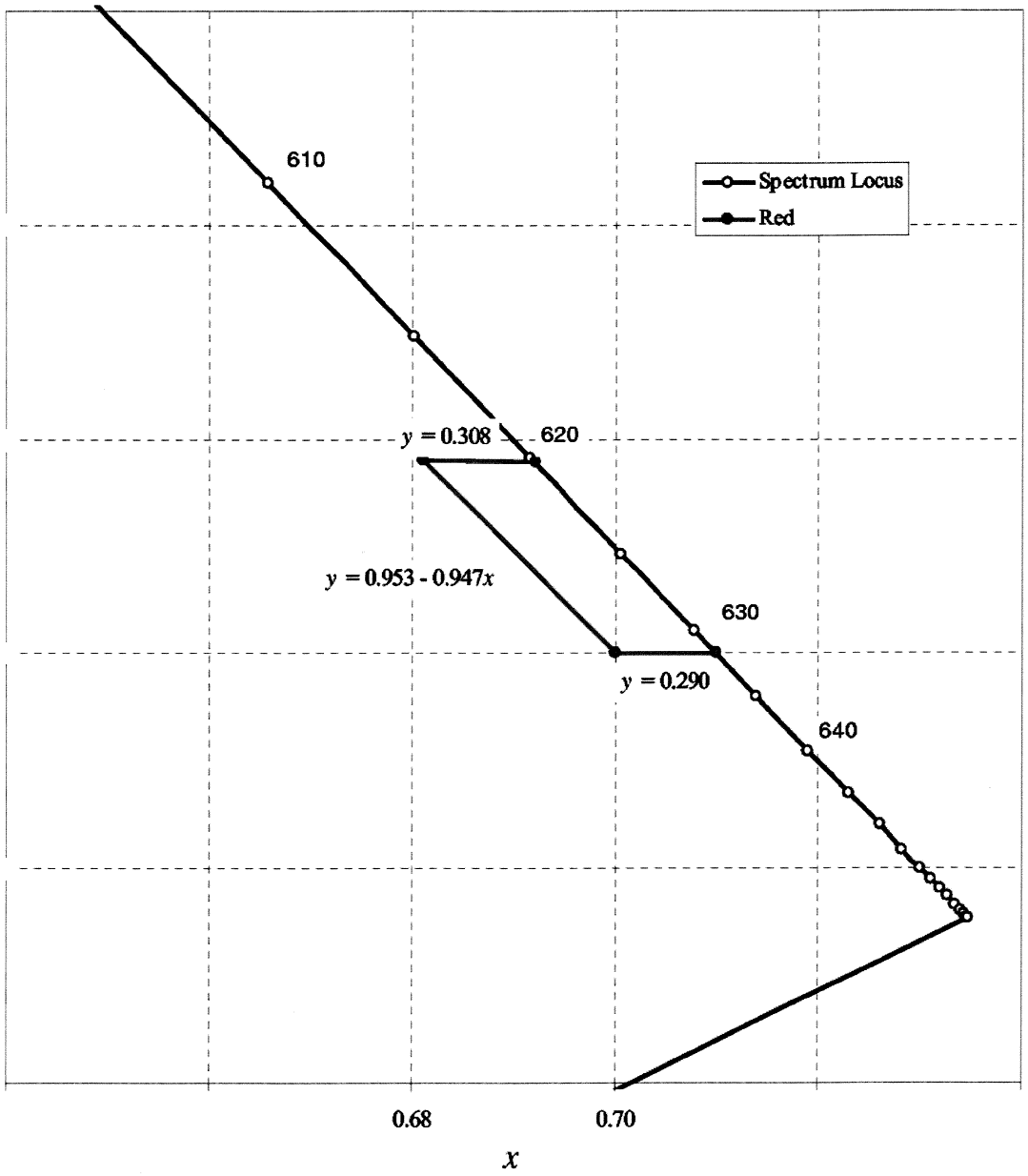

Figure 1a: Color Region for Red Traffic Control Signal Lights

Figure 1 (cont'd)

Color Regions for LED Traffic Control Signal Lights:

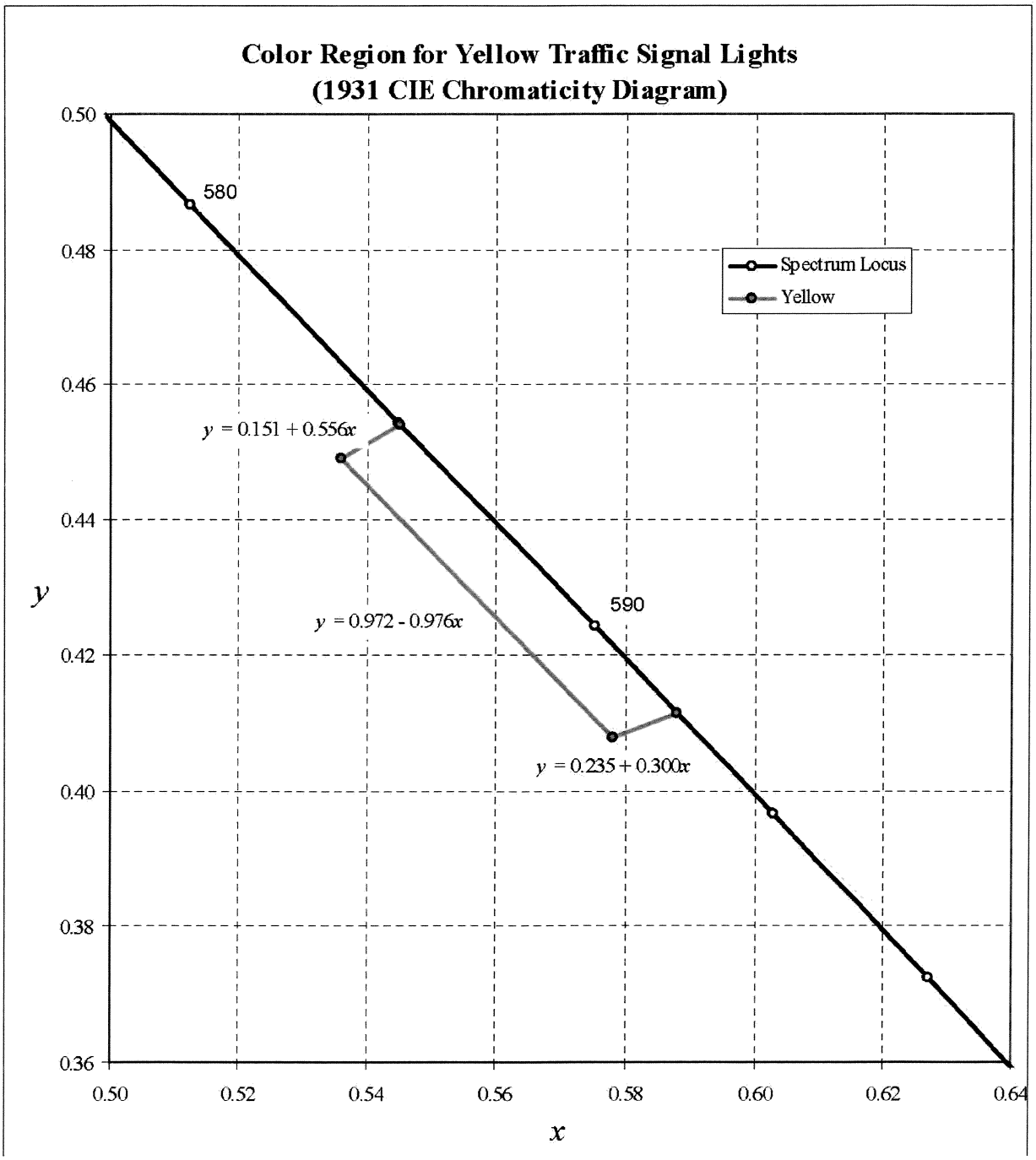

Figure 1b: Color Region for Yellow Traffic Control Signal Lights

Figure 1 (cont'd)

Color Regions for LED Traffic Control Signal Lights:

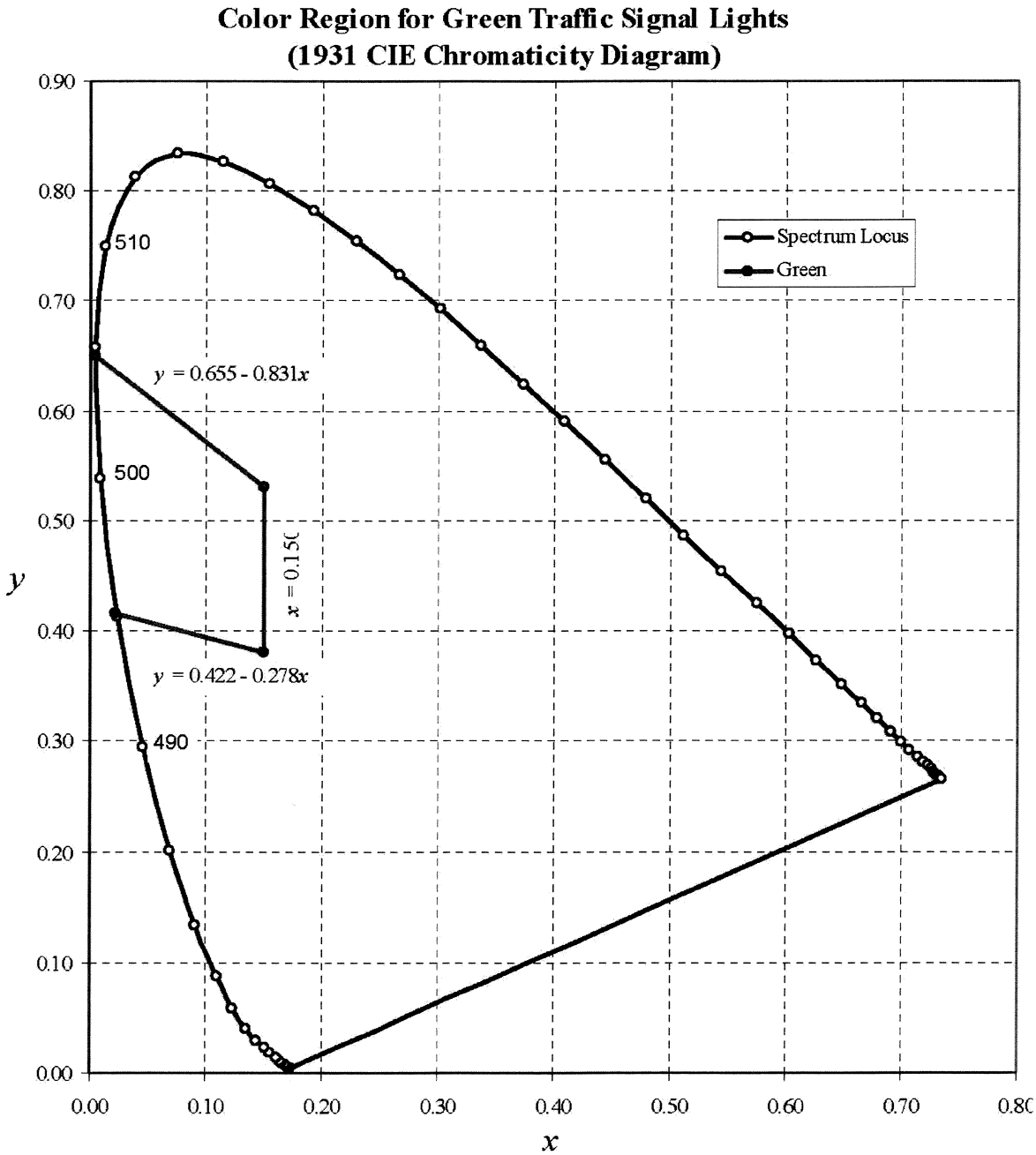

Table 1 a. – Minimum Maintained Luminous Intensity

Vertical Angle	Horizontal Angle	Red 8"		Yellow 8"		Green 8"		RED 12"		Yellow 12"		Green 12"	
		Min.	160%	Min.	110%	Min.	135%	Min.	160%	Min.	110%	Min.	135%
12.5	2.5	17	27	41	45	22	30	37	59	91	100	48	65
	7.5	13	21	33	36	17	23	29	46	73	80	38	51
7.5	2.5	31	50	78	86	41	55	69	110	173	190	90	122
	7.5	25	40	62	68	32	43	55	88	137	151	71	96
	12.5	18	29	45	50	24	32	40	64	100	110	52	70
2.5	2.5	68	109	168	185	88	119	150	240	373	410	195	263
	7.5	56	90	139	153	73	99	124	198	309	340	162	219
	12.5	38	61	94	103	49	66	84	134	209	230	109	147
	17.5	21	34	53	58	28	38	47	75	118	130	62	84
	22.5	12	19	29	32	15	20	26	42	64	70	33	45
-2.5	2.5	162	259	402	442	211	285	358	573	892	981	466	629
	7.5	132	211	328	361	172	232	292	467	728	801	380	513
	12.5	91	146	226	249	118	159	201	322	501	551	261	352
	17.5	53	85	131	144	69	93	117	187	291	320	152	205
	22.5	28	45	70	77	37	50	62	99	155	171	81	109
	27.5	15	24	37	41	19	26	33	53	82	90	43	58
-7.5	2.5	127	203	316	348	166	224	281	450	701	771	366	494
	7.5	106	170	262	288	138	186	234	374	582	640	304	410
	12.5	71	114	176	194	92	124	157	251	391	430	204	275
	17.5	41	66	103	113	54	73	91	146	228	251	119	161
	22.5	21	34	53	58	28	38	47	75	118	130	62	84
	27.5	12	19	29	32	15	20	26	42	64	70	33	45
-12.5	2.5	50	80	123	135	65	88	110	176	273	300	143	193
	7.5	40	64	98	108	52	70	88	141	218	240	114	154
	12.5	28	45	70	77	37	50	62	99	155	171	81	109
	17.5	17	27	41	45	22	30	37	59	91	100	48	65
	22.5	8	13	21	23	11	15	18	29	46	51	24	32
	27.5	5	8	12	13	6	8	11	18	27	30	14	19
-17.5	2.5	23	37	57	63	30	41	51	82	127	140	67	90
	7.5	18	29	45	50	24	32	40	64	100	110	52	70
	12.5	13	21	33	36	17	23	29	46	73	80	38	51
	17.5	7	11	16	18	9	12	15	24	36	40	19	26
	22.5	3	5	8	9	4	5	7	11	18	20	10	14
-22.5	2.5	17	27	41	45	22	30	37	59	91	100	48	65
	7.5	13	21	33	36	17	23	29	46	73	80	38	51
	12.5	10	16	25	28	13	18	22	35	55	61	29	39
	17.5	5	8	12	13	6	8	11	18	27	30	14	19
-27.5	2.5	12	19	29	32	15	20	26	42	64	70	33	45
	7.5	8	13	21	23	11	15	18	29	46	51	24	32

SECTION 16719

COUNTDOWN PEDESTRIAN SIGNAL MODULE

PART 1 GENERAL

Furnish LED countdown pedestrian signal modules that conform to the following:

A. Manual on Uniform Traffic Control Devices (MUTCD)
Control Signal Indications (PTCSI).

B. Federal Communications Commission (FCC) Title 47, Subpart B, Section 15 on the Emission of Electronic Noise.

1.01 MATERIALS

The items furnished and installed under this contract shall be new, unused of the latest product in production to commercial trade, and shall be of the highest quality as to materials used and workmanship. Manufacturers furnishing these items shall be experienced in design and construction of such items and shall furnish evidence of having supplied similar items which have been in successful operation. The bidder shall be an established supplier of the items bid.

1.02 UNIT IDENTIFICATION

Units shall be clearly marked on the back surface of the unit in a permanent manner showing information required for warranty and long term performance. Information to be shown shall include manufacturer name, date of manufacture, electric power requirements, model type, and serial number

1.03 SILENCE OF SPECIFICATIONS

The apparent silence of these specifications as to any detail, or the apparent omission from them of a detailed description concerning any point, shall be regarded as meaning that only the best commercial practice is to prevail and that only material and workmanship of the finest quality are to be used. All interpretations of these specifications shall be made on the basis of this statement. The bidder shall be an established supplier of the items bid.

1.04 TEST EQUIPMENT

Suppliers/manufacturers shall furnish with their bid a complete description and cost of any special test equipment that is necessary to install, operate, or maintain its equipment.

1.05 UNIT PRICES

A. Measurement
This item will be measured as by each countdown pedestrian signal module complete in place.

B. Payment
The work performed and materials furnished in accordance with this Item and measured as provided under "Measurement" will be paid at the unit price bid for "Countdown Pedestrian Signal Module". This price shall be full compensation for furnishing, assembling, and installing the countdown signal, and for all mounting attachments, labor, tools, equipment, and incidentals necessary to complete the work.

PART 2 PRODUCTS

Upon request, one schematic wiring diagram and installation manual shall be provided with each LED module.

2.01 MATERIALS

A. Countdown Pedestrian Signal Module

1. The message-bearing surface of the module shall be supplied with a fully populated "HAND" and "MAN" symbol, overlapping, that comply with PTCSI Standard for these symbols for a message-bearing surface of the size specified.

2. The LED module shall display a solid Portland orange hand and lunar white man and two Portland orange countdown numbers.

3. The numbers 00 to 99 on the numerical display shall have 2 rows of LEDs, that are side by side, not offset, and a minimum height of 9 inches.

4. The LED countdown pedestrian signal module shall be a single, self-contained device.

5. Portland Orange (amber hand and countdown numbers) LEDs shall be "AlInGaP" (Aluminum Indium Gallium Phosphorus) technology or equal, and rated for 100,000 hours or more of continuous usage at 25°C and 20 mA. White LEDs shall be InGaN (Indium Gallium Nitide) technology.

6. The assembly and manufacturing process for all internal LED and electronic components shall be adequately supported to withstand mechanical shock and vibration from high winds and other sources.

7. The signal module shall be made of UL94VO flame-retardant materials. The lens is excluded from this requirement.

8. The lens of the LED pedestrian and countdown signal modules shall be polycarbonate UV stabilized.

9. The exterior of the lens of the LED countdown pedestrian signal module shall be uniform and frosted to reduce sun phantom effect.

10. Each individual LED traffic module shall be identified for warranty purposes with the manufacturer's trade name, serial number and operating characteristics, i.e., rated voltage, power consumption, and volt-ampere.

11. LED countdown pedestrian signal modules shall fit into traffic housings built to the VTCSH Standard without any modification to the housing.

12. Lens must diffuse the LED array over the entire surface of the lens.

B. ENVIRONMENTAL REQUIREMENTS

1. The LED pedestrian and countdown signal modules shall be rated for use in the ambient operating temperature range of -40ºC to +60ºC (-40ºF to +140ºF).

2. The LED pedestrian and countdown signal modules, when properly installed with gasket, shall be protected against dust and moisture intrusion per requirements of NEMA Standard 250-1991, sections 4.7.2.1 and 4.7.3.2, for type 4 enclosures to protect all internal LED, electronic, and electrical components.

C. ELECTRICAL REQUIREMENTS

1. The secured, color coded, 914 mm (36 in) long, 600V, 20 AWG minimum, jacketed wires, conforming to the National Electrical Code, rated for service at +105ºC, are to be provided for electrical connection.

2. The LED pedestrian and countdown signal module shall operate from a 60 ±3 Hz AC line over a voltage range of 80 to 135 volts rms. Variations in the voltage range shall have a minimal impact, less than 10%, on the luminous output of the module. Rated voltage for all measurements shall be 120 ±3 volts rms.

3. The LED circuitry shall prevent perceptible flicker over the voltage range specified above.

4. Transient Voltage Immunity: The modules shall be tested for transient immunity, at minimum amplitude of 2000 volts, using the procedure described in Section 2.1.8, NEMA Standard TS 2-2003.

5. Catastrophic failure of one LED light source in Man & Hand Symbol shall not result in the loss of more than the light from the one display segment.

6. The LED pedestrian and countdown module shall be operationally compatible with the currently used controller assemblies. The LED pedestrian and countdown module shall be operationally compatible with conflict monitors.

7. The LED pedestrian and countdown module including its circuitry must meet Federal Communications Commission (FCC) Title 47, Subpart B, Section 15 regulations concerning the emission of electronic noise.

8. The LED pedestrian and countdown module shall provide a power factor of .90 or greater when operated at the nominal operating voltages, and 25 degrees C (77 degrees F).

9. Total harmonic distortion (current and voltage) induced into an AC power line by an LED pedestrian and countdown module operated at the nominal operating voltages, and 25 degrees C (77 degrees F), shall not exceed 20 percent.

D. INPUT PROTECTION (optional)

At the point of entry to the module for each input provide two 0.5-Ohm, 10-watt wire-wound power resistors with 0.2 micro Henries inductance (one on the AC+ Line & on the AC- Line). Provide one 20 Joule surge arrestor between AC+ to AC-. A 0.68 microfarad capacitor must be placed between AC+ & AC – (between the resistor & arrestor).

E. PHOTOMETRIC REQUIREMENTS

1. Luminance

For a minimum period of 60 months, the maintained minimum luminance values for the modules under the operating conditions defined in Sections 3.3.1 and 5.2.1, when measured normal to the plane of the icon surface, shall not be less than:

Walking person: 2,200 cd/m^2
Hand: 1,400 cd/m^2

The luminance of the emitting surface, measured at angles from the normal of the surface, may decrease linearly to a value of 50% of the values listed above at an angle of 15 degrees.

The light output requirements in this specification apply to pedestrian signal heads without any visors, hooded or louvered (egg-crate). Addition of such visors may affect the light output of the signal head, and the purchasing agency may wish to consult the issue with the manufacturer.

2. Uniformity and Distribution

The uniformity of the walking person and hand icons' luminance shall meet a ratio of not more than 1 to 5 between the minimum and maximum luminance values, as measured in 12mm (0.5 in) diameter spots.

When operating within the temperature range specified in Section B1, the average luminance of the module shall not exceed three times the maintained minimum luminance of the modules, as defined in Section D1.

3. Chromaticity

The standard colors for the LED Pedestrian Signal Module shall be White for the walking person and Portland Orange for the hand icon. The colors for these icons shall conform to the following color regions, based on the 1931 CIE chromaticity diagram:

Walking Person—
White: Blue boundary: $x = 0.280$.
1st Green boundary: $0.280 \leq x < 0.400$
$y = 0.7917 \cdot x + 0.0983$.
2nd Green boundary: $0.400 \leq x < 0.450$
$y = 0.4600 \cdot x + 0.2310$.
Yellow boundary: $x = 0.450$
1st Purple boundary: $0.450 \leq x < 0.400$
$y = 0.4600 \cdot x + 0.1810$.
2nd Purple boundary: $0.400 \leq x < 0.280$
$y = 0.7917 \cdot x + 0.0483$.

White Point	*x*	*y*
1	0.280	0.320
2	0.400	0.415
3	0.450	0.438
4	0.450	0.388
5	0.400	0.365
6	0.280	0.270

Hand—Portland Orange:
Yellow boundary: $y = 0.390$
White boundary: $0.600 \leq x \leq 0.659$ $y = 0.990 - x$ Red boundary: $y = 0.331$.

Portland Orange Point	x	y
1	0.6095	0.390
2	0.600	0.390
3	0.659	0.331
4	0.669	0.331

4. Color Uniformity

The uniformity of the emitted colors shall be such that any color measurement within a 12mm (0.5 in) spot on the emitting surface shall fall within the following regions around the average measured color of the entire emitting surface:

• Walking Person—White:

where Δx and Δy are the differences in the chromaticity coordinates of the measured colors to the coordinates of the average color, using the CIE 1931 Chromaticity Diagram and a 2 degree Standard Observer.

• Hand—Portland Orange:

The dominant wavelength for all individual color measurements shall be within ±3 nm of the dominant wavelength for the average of all the individual color measurements.

F. FUNCTIONAL REQUIREMENTS

1. Basic Operation

The control and regulation module shall allow for the countdown displays to be automatically adjusted with the programmed intervals of the traffic controller.

2. Operating Modes
The module shall operate in one mode:
   a. Clearance Cycle Countdown Mode – The module will start counting when the flashing clearance signal turns on and will countdown to "0" and turn off when the steady "Don't Walk" signal turns on.

3. Power Failures
The equipment must maintain a consistent countdown during short power failures (<1 second). A longer failure or an absence of signal superior to one (1) second must turn off display and trigger a restart system remembering the last sequence, as it is done for the NEMA traffic controller.

PART 3 EXECUTION

3.01 PRODUCT TEST AND INSPECTION

Upon final delivery The City of Houston shall randomly select two modules of each type and deliver City of Houston approved testing laboratory. Said modules shall be subjected to testing according to Part 2.C.4 with all associated costs including shipping to be born by supplier. Any quality issues resulting from these tests will result in rejection of whole shipment.

3.02 WARRANTY

A minimum guarantee for both materials and workmanship shall be provided by the Contractor for the products bid as specified. The guarantee (warranty) period shall begin the day the City officially accepts the item. Any guarantee work is to be completed within 15 days after receipt of notice of material deficiencies.

A. Warranties and Guarantees

1. All material, workmanship and labor furnished shall be covered by Supplier(s)/Manufacturer(s) guarantee and/or warranty for a minimum period of sixty (60) months. Warranty period shall begin the day the LED signal module is received by the City of Houston, either as new order or warranty repair. Bidder shall also be required to have resources to complete any required warranty work within fifteen (15) days after receipt of found defective LED signal module. The City of Houston's preference is for all non-warranty service to be charged a singular flat-rate. Successful bidder will include flat rate repair cost, if available in bid document for all non-warranty covered repairs. If flat rate repair charge is not available, then

Supplier(s)/Manufacturer(s) will provide current hourly labor rate, along with any associated minimum charges that may apply.

2. Successful bidder shall bear all expenses connected with return of any material which the City deems necessary to return for adjustments during guarantee period. Any work done by the City will be at a rate of $40 per labor unit.

3. Modules which exhibit luminous intensities less than the minimum values specified within the first 36 months, of the date of delivery, shall be replaced or repaired.

4. The City of Houston may perform random sample testing on all shipments. Random sample testing will be completed within 45 days after delivery. Optical testing shall be performed with the LED module mounted in a standard pedestrian signal unit. The number of modules tested shall be determined by the quantity of each shipment. The Traffic Operations Division shall determine the sampling parameters to be used for the random testing. Acceptance or rejection of the shipment shall conform to ANSI/ASQC Z1.4 for random sampled shipments.

5. The City of Houston reserves the right to withhold payments which may be due, should it be discovered that material does not meet specifications and/or claims of bidder.

6. Supplier(s)/Manufacturer(s) shall make all engineering data, diagrams, software changes or improvements, which increases performance of equipment purchased under this bid, available to the City of Houston at no additional cost.

7. Supplier(s)/Manufacturer(s) shall have field engineers or technicians available on request to assure satisfactory initial operation, and to consult with City's Traffic Engineer, or his representative, on any special circuitry that may be required in certain applications.

END OF SECTION

SECTION 16720

TRAFFIC SIGNAL CABLE

PART 1 GENERAL

1.01 SECTION INCLUDES

This specification describes minimum requirements for traffic signal control cable and/or wire used in City of Houston traffic signal installations. The cables shall conform to specification requirements of the International Municipal Signal Association (IMSA) for the specific type cables included in the bid form, and THW wire shall conform to industry standards. These specifications and standards are included in this specification by reference. An informational copy of IMSA specifications is available for inspection at the Traffic Operations Center, 2200 Patterson, between the hours of 8:00 AM and 3:00 PM, Monday through Friday, except holidays.

1.02 SILENCE OF SPECIFICATIONS

The apparent silence of these specifications as to any detail, or the apparent omission from it of a detailed description concerning any point, shall be regarded as meaning that only the best commercial practice is to prevail and that only material and workmanship of the finest quality are to be used. All interpretations of these specifications shall be made on the basis of this statement. The bidder shall be an established supplier of the items bid.

1.03 UNIT PRICES

A. Measurement
This item will be measured by the linear foot of traffic signal cables, as per the various sizes and types shown on the drawings. Measurement will not be made for cable inside signal heads and controllers and cable coiled pull boxes, in pole bases and coiled on span wires.

B. Payment
The work performed and materials furnished in accordance with this item and measured as provided under "Measurement" will be paid for at the unit price bid for "Traffic Signal Cables" of the various types and sized specified. This price shall be full compensation for furnishing and installing all materials, and for all, tools, equipment and incidentals necessary to complete the work.

PART 2 PRODUCTS

2.01 MATERIALS

The items furnished shall be new, unused of the latest product in production to commercial trade, and shall be of the highest quality as to materials used and workmanship. Manufacturer furnishing these items shall be experienced in design and construction of such items and shall furnish evidence of having supplied similar items which have been in successful operation. The bidder shall be an established supplier of the items bid.

2.02 INSULATION

Insulation compound and thickness for each conductor shall conform to the specification requirements as specified for each item of the bid form.

2.03 JACKET

Jacket compound and thickness for multi-conductor cable shall conform to the specification requirements as specified for each item of the bid form.

2.04 VOLTAGE RATING

All cables and/or wire furnished shall be rated at 600 Volts.

2.05 CONDUCTORS

Copper used to form the conductors shall be soft or annealed copper and shall be formed as solid or stranded conductor(s) as specified for each item of the bid form.

2.06 CONDUCTOR IDENTIFICATION AND CABLE MARKER

Each conductor shall be identified by color-coding conforming with specification requirements specified for each item of the bid form. Each cable shall be identified at maximum 2-foot intervals with manufacturers name and year of manufacture.

PART 3 EXECUTION

3.01 FIELD QUALITY CONTROL

A. Test and Test Methods
All cables and/or wires shall be sampled and tested at the factory to determine their compliance with specification requirements as specified for each item of the bid form.

END OF SECTION

SECTION 16724

EMERGENCY VEHICLE PREEMPTION (EVP)

PART 1 GENERAL

1.01 SECTION INCLUDES

A. The system employs optical communication to identify the presence of designated emergency vehicles and causes the traffic signal controller to advance to and/or hold a desired traffic signal display selected from phases normally available. The matched set of components which make up the system will cause the existing traffic controller to be manipulated upon recognition of the signal from the vehicle. This communication is effective to the optical detectors at or near the intersection over a line-of-sight path of up to 1800 feet.

The system requires no attention of the vehicle operator other than a simple emitter "ON" switch located in the vehicle which is to remain "ON" until the end of the emergency run. The system shall operate on a first-come, first-served basis. The system is capable of overriding lower priority systems of similar nature while yielding priority to activity such as railroad, drawbridge, etc. The system shall interface with existing traffic signal controllers without compromising normal operation or existing safety provisions.

The EMERGENCY VEHICLE PREEMPTION (EVP) consists of optical emitter assemblies, optical detectors, optical detector cable, phase selectors, preempt module and card rack. The EVP Intersection Components are the optical detectors, optical detector cable, phase selectors, preempt module and card rack. Emitter assemblies will be supplied by the Contractor only when specifically called out on the plans.

1.02 SILENCE OF SPECIFICATIONS

The apparent silence of these specifications as to any detail, or the apparent omission from them of a detailed description concerning any point, shall be regarded as meaning that only the best commercial practice is to prevail and that only material and workmanship of the finest quality are to be used. All interpretations of these specifications shall be made on the basis of this statement. The bidder shall be an established supplier of the items bid.

1.03 MEASUREMENT AND PAYMENT

A. Unit Prices.

1. This item will be measured by each intersection of the required optical detectors, optical detector cable, phase selectors, preempt module and card rack complete in place.

2. The work performed and materials furnished in accordance with this item and measured as provided under "Measurement" will be paid for at the unit price bid for "Emergency Vehicle Preemption". This price shall be full compensation for furnishing, installing and testing the system; and for all labor, tools, equipment and incidentals necessary to complete the work.

PART 2 PRODUCTS

2.01 MATERIALS

The items furnished and installed under this contract shall be new, unused of the latest product in production to commercial trade, and shall be of the highest quality as to materials used and workmanship. Manufacturer(s) furnishing these items shall be experienced in design and construction of such items and shall furnish evidence of having supplied similar items which have been in successful operation. The bidder shall be an established supplier of the items bid.

2.02 MATCHED SYSTEM COMPONENTS

The City of Houston EVP is comprised of four basic matched components. To ensure system integrity, operation and compatibility, the four basic components (optical emitter, optical detector, detector cable, phase selector) shall be from the same manufacturer. The bidder shall supply and install the optical detector(s), detector cable, and phase selector for each intersection called for on the plans.

The bidder of the Emergency Vehicle Preemption equipment shall provide with the bid written certification from the manufacturer that the system components were designed, manufactured and tested as a system of matched components and will meet or exceed the requirements of this specification and work with the existing City of Houston optical emitters.

2.03 SYSTEM OPERATION

A. Priority control phase selection shall be activated by an optically transmitted signal of 14.035 HZ or 9.639 HZ, or upon the activation of a test switch.

B. The traffic controller shall receive inputs from the preempt module upon activation of the appropriate signal from the phase selector.

C. The system shall provide power for up to three optical detectors for each priority channel. The system shall maintain continuous communication between the optical emitter equipped vehicle and the traffic controller.

D. The system shall allow the traffic signal controller to resume normal timing operation after the optical signals cease for an appropriate period.

E. The system shall not attempt controller manipulation nor retain priority vehicle calls during periods of "intersection flash" or "railroad preempt" operations.

2.04 SYSTEM COMPONENT SPECIFICATIONS

A. Optical Emitter Assembly

1. The assembly shall include an optical energy emitting unit for mounting to the exterior of the vehicle, an emitter control switch for mounting to the interior dash or instrument panel, and all necessary wiring and hardware for a typical installation.

2. The optical emitter assembly shall operate over an ambient temperature range of -30 degrees F (-34 degrees C) to up to 140 degrees F (+60 degrees C).

3. The optical energy emitting unit shall contain an internal regulated power supply to convert 12 VDC (positive or negative ground) vehicle battery power to high voltage required for the flashtube and meet the following electrical requirements:

   a. Operational at 10 volts DC to 15 volts DC,

   b. Have internal protection for a sustained input voltage of up to 25 volts DC,

   c. Deliver sufficient optical energy to activate the optical detector from a distance of 1800 feet, and

   d. Consume no more than 40 watts.

4. The optical energy emitting unit shall weigh not more than 4.5 pounds.

5. The optical energy emitting unit shall not exceed the following physical dimensions:

   a. Length - 5.25 inches,

   b. Width - 7.0 inches, and

   c. Height - 6.63 inches.

6. The optical energy emitting unit shall be capable of producing precisely-timed pulses of high intensity light in response to a low voltage trigger signal from the crystal controlled emitter control switch.

7. The optical energy emitting unit shall be controlled by a single ON/OFF switch which requires no warm-up, setting, or adjustments by the vehicle operator. An indicator located adjacent to the ON/OFF switch shall identify that the crystal controlled timing circuitry is energized.

8. The emitter control switch shall produce crystal controlled low voltage trigger pulses to the optical energy emitting unit. For high priority/Class II applications, the frequency of the trigger pulses shall be 14.035 +/-0.255 HZ. For low priority/Class I applications, the frequency of the trigger pulses shall be 9.639 +/-0.119 HZ.

B. Optical Detector

1. The optical detector shall be a lightweight, weatherproof device capable of sensing and transforming pulsed optical energy into electrical signals for use by the phase selection equipment.

2. The unit shall be high impact polycarbonate construction with stainless steel and/or brass hardware.

3. The unit shall be designed for mounting at or near an intersection on a mast arm, pedestal, pipe, or span wire.

4. The unit shall accept optical signals from one or two directions and provide a single electrical output signal.

5. The unit shall include a design feature to allow aiming of the two optical sensing inputs for skewed approaches or slight curves.

6. The unit shall have a built-in terminal strip to simplify wiring connections.

7. The unit shall receive power from the phase selector and have internal voltage regulation to be operational from 16 to 40 volts.

8. The unit must be responsive to the optical emitter at a distance of 1800 feet.

9. The unit must deliver the necessary electrical signal to the phase selector via up to 1000 feet.

10. The unit shall employ a replaceable circuit board assembly and photocells to facilitate repair.

C. Optical Detector Cable

1. The cable must guarantee delivery of the necessary quality signal from the optical detector to the phase selector over a non-spliced distance of 1000 feet.

2. The cable must guarantee sufficient power to the optical detector over a non-spliced distance of 1000 feet.

3. The cable must be of durable construction to satisfy the following installation methods:

   a. Direct burial,

   b. Conduit and mast arm pull, and

   c. Exposed overhead, supported by messenger wire.

4. The weight shall not exceed .04 lbs/ft.

5. The outside diameter shall not exceed 0.3 inches.

6. The insulation rating shall be 600 volts minimum.

7. The temperature rating shall be 80 degrees C minimum.

8. The cable shall have three conductors of AWG #20 (7x28) stranded, individually tinned copper, color coded insulation as follows:

   a. Orange for delivery of optical detector power,

   b. Blue for optical detector power return, and

   c. Yellow for optical detector signal.

9. The conductors shall be shielded with aluminized polyester and have an AWG #20 (7x28) stranded and individually tinned drain wire to provide signal integrity and transient protection.

10. The shield wrapping shall have a 20% overlap to ensure integrity following conduit and mast arm pulls.

D. Phase Selector

1. All phase selectors shall be digitally controlled and be capable of providing high and low priority operations.

2. The unit shall be a plug-in, two-channel, dual priority device intended to be installed directly into a card rack wired into the traffic signal cabinet.

3. The unit shall be powered from 115 volts, 60 HZ mains and contain an internal, regulated power supply to support optical detectors.

4. The unit shall be capable of recognizing the following pulse rates as delivered by the optical detectors:

   a. 9.639 HZ +/-.119 HZ as low priority (Class I), and

   b. 14.035 HZ +/-.255 HZ as high priority (Class II).

5. The primary optical detector inputs and power outputs shall be on the card edge. Two additional detector inputs, per channel, shall be provided via a front panel connector.

6. One opto-isolated NPN output per channel shall be delivered to the appropriate channel pin on the card edge connector as follows:

   a. HZ +/-.02 HZ 50% on duty square wave in response to a Class I call, and

   b. A "Steady On" in response to a Class II call.

7. The unit shall utilize crystal control timing and optical pulse rate recognition circuitry to assure:

   a. Accurate optical signal recognition for dual priority,

   b. Synchronous logic,

   c. Precise output pulse, and

   d. Accurate call dropout time.

8. The unit shall have six recessed range controls per channel, three for low priority and three for high priority, to adjust optical sensitivity (emitter range).

9. The unit shall have a solid state "Power On" indicator.

10. The unit shall have a "Class I" and "Class II" solid state indicator for each channel which performs as follows:

    a. Flash during call validation, and

    b. Be steady-on during valid call and test switch operations.

11. The unit shall have a test switch for each channel to deliver Class I or Class II signal pulse rates to verify proper function at both optical emitter flash rates, first-come, first-served operation, and Class II override capability.

12. The unit shall have a selectable call dropout time of 5 seconds or 10 seconds.

13. The unit shall properly identify a high priority (Class II) demand with any combination of up to 10 high and low priority emitter signals being received simultaneously and asynchronously on either channel.

14. The unit shall not exceed the following physical dimensions:

    a. Length (including handle) - 7.91 inches,

    b. Width - 1.11 inches, and

    c. Height - 4.50 inches.

E. Traffic Controller Preemption Module

1. A traffic controller preemption module shall be supplied in addition to the four basic matched components. This module shall interface between the phase selector(s) and the traffic signal controller to provide dual priority preempt operation.

2. The preempt module shall be a plug-in, microprocessor controlled, 4 input, 13 output, dual priority device.

3. The preempt module shall recognize steady-on (high priority) over-pulsing (low priority) inputs from the phase selector and assign control on first-come, first-serve and, high priority over low priority basis.

4. The preempt module shall recognize input signals from one or two dual priority phase selectors for up to four separate channels of emergency vehicle preemption.

5. The preempt module shall have a delay timer adjustable from 0 to 15 seconds in one second increments. The delay timer, when properly set, will guarantee a minimum

green time for the phase or phases being served prior to initiating the preempt operation.

6. The preempt module shall use the standard input functions available on any NEMA type traffic signal controller and shall not cause the controller to abbreviate its programmed yellow or all red clearance times.

7. When the phase selector deactivates its output, the preempt module shall place vehicle calls on all phases of the traffic signal controller and then allow the controller to resume its regular phase sequence.

8. The preempt module shall provide a separate output for "coordination free" to release the traffic signal controller from coordination control during the operation of the EMERGENCY VEHICLE PREEMPTION.

9. The preempt module shall have a separate input that when active shall cause the preempt module to turn off all outputs to allow for railroad or drawbridge operation.

F. Card Rack

1. The card rack shall be a shelf-mounted device designed to accommodate two phase selectors and a preempt module.

2. The rack shall be constructed of 5052 aluminum of .062" thickness and shall not exceed 7.38" W x 4.71" H x 7.13" L. All of the aluminum components consisting of the sides, top, bottom, and front panel shall be clear anodized.

3. The optical detector cable shall terminate on two terminal strips, 4-position, feed-through solder type. The color code and function of each wire shall be clearly silk screened adjacent to each terminal.

4. The front panel of the card rack shall be hinged to provide easy access to the inside of the rack. Machine screws shall be used to secure the front panel when in the closed position.

5. The card rack shall be equipped with a quick disconnect type connector and 6' harness, wired to accommodate the installation of the card rack in a traffic signal cabinet.

PART 3 EXECUTION

3.01 GUARANTEE

A. A minimum guarantee for both materials and workmanship shall be provided by the Contractor for the products bid as specified. The guarantee (warranty) period shall begin the day the City officially accepts the item. Any guarantee work is to be completed within 15 days after receipt of notice of material deficiencies.

1. Warranties and Guarantees

a. Any and all equipment furnished shall be covered by manufacturer's guarantee or warranty for a period of twelve (12) months commencing on final acceptance date with respect to parts, workmanship, and performance of the product.

b. The Contractor shall bear all expenses connected with the return of any equipment which the City deems necessary to return to the Contractor for proper adjustment or repairs during the guarantee period.

END OF SECTION

SECTION 16727

TRAFFIC SIGNAL LOOP DETECTOR

PART 1 GENERAL

1.01 SECTION INCLUDES

A. Loop Detectors
This specification and detailed drawings describe the materials and installation procedures necessary to install loop detectors in roadways in the City of Houston. Basically, the inductive loop detector consists of a few turns of wire embedded in the roadway pavement which are connected to an electronic component mounted in a roadside cabinet. The detector is designed so that the passage of a vehicle over the loop in the pavement modifies the magnetic flux around the resonantly tuned loops of wire which is sensed by a transistorized unit that transmits the vehicle presence or passage to the traffic signal controller. Since traffic signal timing and sequencing are totally dependent on the quality and placement of the loops, craftsman type skills must be exercised on installation procedures. Loops may be adjusted by the Engineer, as necessary.

B. Card Rack Amplifiers

These specifications define the minimum acceptable design, operational and functional performance requirements for high performance, two-channel inductive loop vehicle detector units and data acquisition software that can provide binned traffic data and real-time traffic measurements on a vehicle-by-vehicle basis. The system shall provide current measurements and vehicle detection information on the last vehicle for use in local control, incident detection and advanced traffic management systems.

1.02 UNIT PRICES

A. Measurement
This Item will be measured by the linear foot of sawcut containing loop wire and by each two (2) channel detector amplifier. Deviation of the Contractor from the layout on the drawings will require prior approval of the Engineer.

B. Payment

The work performed and materials furnished in accordance with this Item and measured as provided under "Measurement" will be paid for at the unit price bid for "Loop Detector Sawcut" for the various sizes and types of loop detectors specified

on the drawings furnished and installed. This price shall be full compensation for furnishing, installing and testing the loop detectors; and for all labor, tools, equipment and incidentals necessary to complete the work.

Loop detector amplifiers as measured under "Measurement" will be paid for at the unit price bid for "Two Channel Detector Amplifiers" furnished and installed. This price shall be full compensation for furnishing, installing, and testing the loop detector amplifiers.

PART 2 PRODUCTS

2.01 LOOP DETECTOR MATERIALS

A. Contractor shall set up an adequate and safe traffic control based upon the Texas Department of Transportation Standard Drawing, "BARRICADES, CONSTRUCTION SIGNS AND TYPICAL CONSTRUCTION LAYOUTS FOR TRAFFIC SIGNAL INSTALLATIONS," I-82-8011 BTS and the Texas Manual on Uniform Traffic Control Devices, latest revision.

B. Contractor shall draw all loop outlines on pavement for approval by the Engineer, prior to beginning sawcut.

C. As a minimum requirement, Contractor shall use a self-propelled power saw with diamond blade or abrasive saw blades for sawing the pavement to the length, depth and width as shown on the intersection layout plan and the typical detail drawings. The power saw must be equipped with a depth measurement device, water valve and guide.

D. Contractor shall locate water supply (hydrant or water truck) to cool the blade and to clean out slots. Hydrant can only be used if proper permission has been obtained and water meter is used.

E. Contractor shall have an air compressor for the cleaning and drying out the sawed slots on site.

F. Drill hole through pavement for conduit to pull box.

G. Flexible embedding sealer shall meet the following minimum specifications:

1. The flexible embedding sealer shall be designed to enable vehicular traffic to pass over the properly filled saw cut immediately after installation without tracking or stringing of the material. The flexible embedding sealer shall form a surface skin allowing exposure to vehicular traffic within 30 minutes at 75

degrees F. And completely cure to a tough, rubber-like consistency in two to seven days after installation.

2. Properly installed and cured flexible embedding sealer shall exhibit resistance to effects of weather, vehicular abrasion, motor oils, gasoline, anti-freeze solution, brake fluid, deicing chemicals and salt normally encountered, in such a manner that the performance of the vehicle detector loop wire is not adversely affected.

3. Flexible embedding sealer shall be applicable to both Portland cement concrete andasphalt concrete pavements.

4. The flexible embedding sealer shall exhibit minimal shrinkage during or after its installation, and in no manner affect the performance characteristics of the material.

5. The flexible embedding sealer shall be designed to permit clean-up of material and application equipment with non-flammable solvents such as I.I.I. trichloroethane or Scotch-Grip Brand Solvent No. 4 (Prior to curing of flexible embedding sealer)). Should any flexible embedding sealer material be allowed to cure in the application nozzle, it shall be able to be pulled our as a solid plug.

6. The flexible embedding sealer shall have a minimum 12 month shelf life in undamaged original containers when stored in a cool, dry environment.

7. The flexible embedding sealer shall be designed for roadway installation when the surface temperature is between 40 degrees F and 140 degrees F.

8. The flexible embedding sealer shall have the following physical properties in its uncured and cured states.

Physical Properties of the uncured (wet) flexible embedding sealer:

Property	**Requirement**	**Test Procedures**
Weight	10.1 lbs/gal (+/- 0.5 lbs)	Weight/Gallon
Viscosity	10,000-85,000 CPS	Viscosity
Drying Time	24 hrs. (max)	Tack-Free Time
Skinning Time	6 hrs.	

Physical Properties of the cured flexible embedding sealer:

Property	**Requirement**	**Test Procedure**
Hardness (Indentation)	65-85	Rex Hardness
Tensile Strength	700 psi (min.)	Tensile & Elongation
Elongation	250%	Tensile & Elongation

H. Loop wire shall be IMSA Spec. No. 51-5-1984, #12 AWG, copper, stranded, single conductor pvc/nylon-with tube jacket. The maximum O.D. of the entire cable shall be 0.260 inches.

I. Contractor shall obtain megger and ohm meter for checking integrity of loop insulation and the continuity and resistance of the wired loop.

1. Wire must have a megger reading before installation (on reel);

2. Megger reading after installation (before being sealed);

3. Megger reading after being sealed and splices made;

4. It shall be the Contractor's responsibility to obtain these readings and have them available for the signal inspector upon request.

J. Splicing kit materials and equipment for splicing the two #12 wires to the shielded balanced pair cable in the pull box. Only soldered connections are acceptable. All splices must be watertight. The drain wire of the loop lead-in cable shall be grounded to earth ground only at the controller or detector cabinet. The resistance from the drain wire to the ground rod shall be less than one (1) ohm, at the cabinet.

K. The loop wire shall be held in place every two (2) feet with strips of rubber, neoprene flexible tubing or polyethylene foam sealant, one (1) inch in length. These strips shall be left in place and slot filled with loop sealant.

L. All wires shall be tagged to identify the loop number and lane. The tag identification shall correlate with the electrical schedule shown on the project plans. The tags shall be furnished and installed by the Contractor. Each tag shall be wrapped around the conductor twice. Wire marking tags shall be made of flame retardant reinforced epoxy tape 5.5 mils in thickness and ¼ inch minimum width. The tape shall be flexible and resistant to oil and water, and have a pressure sensitive acrylic adhesive backing. The adhesive shall be a high tack adhesive with good adhesion to clean neoprene, hypalon, nylon and PVC insulation materials. The film material shall conform to the flame retardant requirements of UL 510 and be rated at 150 degrees Centigrade. Appropriate numbers and letters shall be printed on wire tags for conductor identification.

2.02 CARD RACK DETECTOR AMPLIFIER

A. General Design Requirements

1. A communication link shall provide remote access to the detector for reading unit configuration settings, for fault identification and verification, for real-time system monitoring and data collection on up to two channels of detection. It shall include password security to the detector to change configuration settings. The communication link shall provide for party line communication on up to eight units using 4-bit hardwired addresses to the card edge connector and/or 127 software programmable addresses in EEPROM memory.

2. The interface and data acquisition software shall be organized by application and facilitate setup, real-time traffic monitoring and collection of binned count and occupancy data. A vehicle log shall provide a means for logging of vehicle speed, vehicle length, loop-to-loop travel time and detection duration. Optional modes of operation shall include a vehicle travel direction detection setup capability using overlapped 6-foot by 6-foot loops, a long-loop count mode to provide turning movement counts and a microloop mode selection when channels are connected to microloop sensors.

3. The successful bidder or contractor shall supply data acquisition and interface software and vehicle detectors that meet all the operational and functional performance requirements in accordance with the terms and conditions of this specification.

4. The bidder or contractor shall be responsible for any testing, rework and/or re-testing of equipment delivered under this contract that may be required to meet these specifications, at no expense to the City of Houston.

5. The bidder's documentation shall indicate the manufacturer's name, address, model numbers, and include the shipping address for warranty repair work, as required in these specifications.

6. The City of Houston shall not be required to pay for software and/or hardware related modifications or changes and/or for associated labor that is required to correct errors.

7. The City of Houston shall be required to pay for any software and/or hardware-related modifications or changes and/or for associated labor that result from requested options, features or enhancements.

8. The City of Houston shall have the option to request and provide the communication protocols to a professional engineering consultant or OEM for

integrating the data acquisition and interface software into its advanced traffic management system.

9. Serial numbers shall be clearly legible and permanently placed on each inductive loop detector unit.

10. Detectors shall be warranted against defects in workmanship or materials for five (5) years from date of purchase.

B. General Hardware - Standards and Performance Requirements

1. The inductive loop detector units shall be fully interchangeable, whether used for system counting, occupancy measurement, speed and length measurement, directional detection, binned data collection, remote data acquisition in advanced traffic management systems or for local intersection control (including long-loop counting).

2. Detector configuration data shall be entered using special interface and data acquisition software. A communication interface shall provide for remote connection and configuration of detectors, real-time activity monitoring and data acquisition via modem to remote devices.

3. Inductive loop detector units shall meet the latest edition of the National Electrical Manufacturers Association (NEMA) Standard TS2-1992 for Type 2 controller and cabinet assemblies plus the functional and performance requirements of this specification. The detectors shall be configured as plug-in devices which meet the requirements for NEMA TS2-1992 section 3.2, actuated Type 2 A2 operation and Type 1 A1 operation in 44-pin input files.

4. Detectors shall comply with NEMA TS2-1992 Section 6.5.2.2.1, Table 6.5-1 for four-channel rack mount type units, NEMA designation "D," except that Delay and Extension Timing shall be provided on two channels in lieu of NEMA TS2-1992 section 6.5.2.24 requirements.

5. Detectors shall also be suitable for use in California/New York TYPE 170/179 and ATC cabinets with 22-pin input files.

6. Detectors shall detect and hold the presence of all licensable motor vehicles (including small motorcycles). This shall be accomplished, without detecting traffic in the adjacent lane (beyond 36 inches from the loops except as noted below), on the following loop configurations with 100 up to 1000 feet of homerun cable.

One to six series connected, 6-foot by 6-foot square loops with three turns of #14 AWG wire.

One to six series connected, 6-foot by 6-foot square loops with four turns of #14 AWG wire.

A 6-foot wide by 30-foot long loop with two or three turns of #14 AWG wire (when set to detect small motorcycles, may detect adjacent lane traffic).

A 6-foot wide by 20-foot to 60-foot long quadrupole loop with a winding two-four-two turns of #14 AWG wire. When sensitivity is set to detect small motorcycles, adjacent lane traffic shall not be detected.

Single, double and triple microloop probe sets.

7. The detection performance described above shall be accomplished when using lead-in/homerun cable lengths of from 50 feet to over 1,000 feet of #14 AWG conductor homerun cable, i.e., International Municipal Signal Association, Specification #50-2.

8. A pushwheel switch shall be provided to allow selection of the threshold/sensitivity setting which will detect and hold presence of all licensable motor vehicles (including motorcycles), without detecting vehicles, moving or stopped, in the adjacent lane (36 inches from the loop connected to this channel, except as noted in 2.1.6.3).

9. Each channel shall automatically self tune with full sensitivity, to any loop and lead-in combination resulting in a total inductance of 20 to 2500 microhenries, with a Q factor of five or greater, within four seconds after application of power.

10. Detectors shall track changes in inductive loop or lead-in electrical characteristics that take place when environmental changes occur, which affect inductive loops installed in undamaged pavement, to insure that units operate properly without producing a false indication, a loss of detection or a change in sensitivity due to weather changes.

C. Special Features and Functional Performance Requirements

1. Detectors shall be microprocessor controlled and shall be configurable with manual switch settings and via software settings in EEPROM memory.

2. Detectors shall include eight sensitivity settings (thresholds), in 2:1 steps. Threshold settings shall directly relate to nanohenries of inductance change

(Delta L). Detection output shall be based on a response to a change in the inductance which exceeds the Delta L threshold selected. For a given loop type, such as a 6-foot by 6-foot, three-turn square loop, it shall not be necessary to readjust the sensitivity setting to detect a specific vehicle type and/or to get consistent occupancy measurements using a range of lead-in or homerun cable lengths that vary from 100 feet up to 3500 feet.

3. Each detector shall have a single, switched oscillator system to sequentially excite and measure each channel to prevent crosstalk between channels within a unit.

4. Each detector shall have a three-position toggle switch to manually select one of three operating frequencies to reduce crosstalk between detector units. These three frequencies shall also be software selectable.

5. Each detector shall have two serial ports, a front panel RS232 port and transmit/receive pins on the card edge connector, to facilitate serial communication.

6. Each serial port shall have a multi-drop mode and be capable of party line communication with up to eight detectors on the party line.

7. The detector unit shall be designed to accommodate the addition of an optional plug-in communication module to allow expansion of the multi-drop capability to 32 devices on a common serial port bus and convert the rear port into an independent port. With the optional module installed, communication with a PC through the front port shall not interfere with system communication on the rear serial port.

8. Baud rates shall be selectable at 1200, 2400, 4800, 9600, or 19200 BPS using the interface software. With the communication module installed, the baud rates shall be independently settable for the front and rear serial ports.

9. The unit shall be designed to accommodate either an optional plug-in communication module or a plug-in memory module to expand the memory used for on-board count and occupancy binning.

10. The front panel serial port shall have EIA-232 electrical characteristics and shall terminate with a front panel 6-pin circular Mini-DIN connector.

11. A communication cable with a DB-9 female connector (for a computer serial port connection) and a 6-pin Mini-DIN male connector (for the front panel serial port connection) shall be provided with the interface and data acquisition software.

The communication cable shall enable direct communication with a remote reporting device or a PC running Windows™ 95 or Windows™ NT 4.0.

12. Units shall have software settable addresses from 128 to 254. Address 255 shall be assigned as a "wildcard" to be used only when connected to the front panel port to establish connection and read the correct address from the device.

13. Units shall have 4-bit back panel hardwired addressing capability to allow selection of one of 16 hard-wired addresses. Back panel addressing shall be enabled via the interface software.

14. An external 24VDC Green control input shall be provided to control the output timing. If True (ground level = 0 to +8VDC), the Green input shall disable Delay and enable Extension Timing; and if False (+16 to +30VDC or Open), the Green input shall disable Extension and enable Delay Timing. Software shall provide for an option to disable Green Gating so that Delay or Extension Timing is provided unconditionally.

15. Detector units shall have a Presence or Pulse mode output option. Selection shall be via front panel switches or software settable options.

16. Each channel shall have a pushwheel sensitivity switch to enable manual selection of the output mode and sensitivity (threshold) settings as follows:

    The pushwheel switch shall have an OFF mode position indicated by an "X" marking. This position shall disable each channel's output and front panel Detect and Fault indicators.

    The pushwheel shall have seven Presence mode sensitivity settings.

    The pushwheel shall have eight Pulse mode sensitivity settings. Pulse mode settings shall use a square-wave marking over the channel sensitivity numeral to differentiate from Presence mode settings.

17. Each increase in Presence or Pulse mode settings shall double the sensitivity (reduce the threshold) from the previous setting.

    The highest sensitivity (smallest change) setting shall have a Delta L threshold value of eight nanohenries.

    The lowest sensitivity setting shall have a Delta L threshold of 1024 nanohenries.

18. Presence output shall hold vehicle detection for at least four minutes minimum for small licensed motor vehicles (100cc. motorcycles) and for at least 60 minutes for automobiles before tuning-out vehicles (dropping recognition of vehicle presence) over a 6-foot by 6-foot square loop with three or four turns of wire.

    The presence output shall not tune out when vehicle motion exists (defined as vehicle entry and departures continue every few minutes and vehicles remain present in the sensing zone) for at least 60 minutes.

19. In Fast Recovery mode the channel shall recover to full sensitivity within 750 milliseconds after all vehicles leave the inductive loop sensing zone.

20. Pulse mode shall provide a single, 118±5 millisecond, output pulse in response to an 18-foot long vehicle traveling over a 6-foot by 6-foot loop at eight miles per hour, and for successive vehicles traveling over the same loop at speeds ranging from ten to 100 miles per hour, with a one second headway. Pulse width shall be programmable from interface software.

    If a vehicle remains over the loop, further detection shall be inhibited for a 1.9-second re-phase delay. Then full sensitivity shall return immediately regardless of continued presence of the vehicle. Pulse re-phase shall be programmable from interface software.

21. Detector units shall have optically-isolated FET outputs to provide fail-safe solid state operation (loss of power to the detector will provide a constant call to the controller--if it has power).

22. Loop detector channels shall continue to function with a single point to ground on the loop/lead-in system.

23. Each channel shall have loop measurement capability to continuously verify loop system integrity. The loop detector shall be capable of detecting and displaying current and historical faults (a short to ground, an open circuit or an inductance change ≥ 25%) in the inductive loop or lead-in system.

24. Each channel shall have two LED indicator lights on the front panel; a green "Detect" LED and a red "Fault" LED.

25. The green "Detect" indicator shall indicate detection output status and output timing in process.

26. It shall indicate an Extend flash while the call output is actuated following a directional detection.

27. The green "Detect" indicator shall flash during Delay and Extension Timing to provide a visual indication of timed output.

    Delay and Extension flash rates shall differ by at least four times the other's rate. Delay shall be four flashes per second and Extension shall be 16 flashes per second.

28. The green "Detect" indicator shall be ON continuously during a fault condition unless fail-safe for a particular condition is disabled using the interface software.

    During a fault condition on a channel, the channel shall display a continuous call indication on its green "Detect" LED and generate a continuous, fail-safe, output on the primary output, regardless of the Pulse or Presence operating mode selected.

29. A status output shall provide a serial coded message to external devices (controllers) that are capable of using the serial information in accordance with NEMA conventions described in TS2-1992.

30. A red "Fault" LED shall indicate current or historical channel fault condition (status) and type. The Fault indicator shall flash a coded message during an open loop condition, a shorted loop system condition and a ≥ 25% change of inductance condition. The associated channel's red "Fault" LED shall provide visual indication of fault type and status as follows:

    OFF state indicates no faults (current or historical).

    ON for one second and one .25 second short pulse indicates a current open loop fault.

    A one second ON and two .25 second short pulses indicates a current shorted loop fault.

    ON for one second and three short pulses indicates a current greater than 25% change in inductance fault.

    A long pulse (six second) followed by a short pulse (.25 second) indicates a historical open.

    A long pulse followed by two short pulses indicates a historical shorted loop.

    A long pulse followed by three short pulses indicates a historical greater than 25% change in system inductance fault.

31. A fault indication shall be enabled for as long as the fault remains, except by turning the channel OFF in software or by selecting the "X" setting on the sensitivity switch.

32. If the fault heals or is corrected, the affected channel shall immediately retune and be capable of normal detection. The visual fault indication shall remain active until reset by a momentary change in the mode or sensitivity setting, a momentary interruption of power or by pressing a reset switch.

33. Call output for each detector channel shall provide detect durations in response to an automobile over a three or four turn 6-foot by 6-foot square inductive loop to enable accurate speed, length and occupancy measurements by external devices.

    The detector with a 100 microhenry loop/lead-in attached to each channel shall, for any negative inductive change which exceeds its sensitivity threshold, generate a ground true logic level output response within 13 milliseconds for a sensitivity setting of 128 nanohenries.

    The detector with a 100 microhenry loop/lead-in attached to each channel shall, for any negative inductive change which exceeds its sensitivity threshold, generate a ground true logic level output response within 20 milliseconds for a sensitivity setting of 64 nanohenries.

34. The output shall become open within the same time limits when such an inductive change is removed.

35. Loop detectors shall have a multi-position switch to Reset all channels and to provide Normal and Fast Recovery modes of operation.

    The Fast Recovery setting shall cause the detector to adapt instantly to large changes of apparent inductance in the non-call direction.

    The Normal Recovery mode shall cause the detector to adapt, at a default rate of 0.5 thresholds per second, to apparent changes of inductance in both directions.

36. Loop detectors shall have a Remote Reset input pin on the card edge connector. The unit shall reset and establish a new reference for each loop that is turned ON, when voltage on Pin C is less than eight volts DC for a period of greater than 17 milliseconds.

37. Delay Timing shall be adjustable from zero to 31 seconds, minimum, in increments of 1.0 seconds in lieu of NEMA TS2-1992 section 6.5.2.24.1 increments. When Green Gating is enabled (using the interface software) delay timing shall only occur if the green input is false.

38. Extension Timing shall be adjustable from zero to 7.75 seconds, minimum, in increments of 0.25 seconds in lieu of NEMA TS2-1992 section 6.5.2.24.2 increments. When Green Gating is enabled (using the interface software) extension timing shall only occur if the green input is true.

39. Setting the Delay or Extend DIP switches on the printed circuit board to OFF or selecting 0.0-seconds shall disable timing for that channel unless the override switch is off and Configuration Source is selected to be EEPROM using the interface software.

40. Each channel shall be capable of being assigned a Long-loop Count mode using the software.

    Each channel enabled for Long-loop Count mode shall count each individual vehicle moving onto or over a single inductive loop which has a length greater than 20 feet, regardless of previous vehicles being stationary on, moving over or leaving the detection zone.

    Each channel shall be configurable for Long-loop Count mode via the serial communication ports.

    The Long-loop Count shall be readable via the serial ports.

    The call output in the Long-loop Count mode shall be a Presence output.

41. Two channels (channels 1 and 2) shall be capable of being assigned to Directional Detection mode using the software.

    The two channels shall be capable of detecting the direction of travel of a vehicle over two 6-foot by 6-foot overlapping loops.

    The leading edge to leading edge spacing of the overlapping loops shall be three feet.

    The directional count shall be stored in the detector and shall be accessible via the serial ports.

    The directional count shall be stored in the second channel that detects the vehicle in the direction of the vehicle's travel.

A call output shall be generated by the second channel that detects the vehicle in the direction of the vehicle's travel.

42. The vehicle detector unit shall be capable of collecting and storing counts and occupancy in time bins for each channel.

    The time bin interval of the vehicle detector shall be configurable from the serial port using the software.

    The memory of the vehicle detector shall be capable of storing count and occupancy data in 15 minute time bins for all four channels for 36 hours.

    The vehicle detector shall be designed to accommodate a plug-in memory module to expand the on-board memory used for storing the count and occupancy time bins.

    With optional memory module, the vehicle detector shall be capable of storing count and occupancy data in 15-minute time bins for all four channels for 335 hours.

    The count and occupancy stored in the time bins shall be retrievable remotely using the serial ports.

D. Connector Pinout Configuration

The following input-output connector pin terminations shall be provided on input file connectors as well as detector edge connector in accordance to NEMA TS2-1992 section 6.5.2.27.2, Table 6.5.8 requirements.

The detector's edge connector pinout is specified in the table below and is shown looking into the front of a detector card rack or input files. Pin-1 is at the top of the component side of the detector and Pin-A is at the top of the non-component side of the detector.

FUNCTION / SIGNAL	PIN	PIN	FUNCTION / SIGNAL
CH 1 GREEN DC+	1	A	DC GND
CH 2 GREEN DC+	2	B	POWER (+10.8 to 37VDC)
DET ADDRESS 3	3	C	REMOTE EXTERNAL RESET
LOOP IN CH 1	4	D	LOOP IN CH 1
LOOP IN CH 1	5	E	LOOP IN CH 1
DET ADDRESS 0	6	F	CH 1 OUT +
STATUS OUTPUT CH 1	7	H	CH 1 OUT -
LOOP IN CH 2	8	J	LOOP IN CH 2
LOOP IN CH 2	9	K	LOOP IN CH 2

DET ADDRESS 3	10	L	CHASSIS GROUND
NO CONNECTION	11	M	NO CONNECTION
NO CONNECTION	12	N	NO CONNECTION
NO CONNECTION	13	P	NO CONNECTION
NO CONNECTION	14	R	NO CONNECTION
DET ADDRESS 2	15	S	NO CONNECTION
NO CONNECTION	16	T	NO CONNECTION
NO CONNECTION	17	U	NO CONNECTION
NO CONNECTION	18	V	NO CONNECTION
DATA TRANSMIT	19	W	CH 2 OUT +
STATUS OUTPUT CH 2	20	X	CH 2 OUT -
DATA RECEIVE	21	Y	NO CONNECTION
NO CONNECTION	22	Z	NO CONNECTION

E. Interface Software Requirements

(for setting up communication and data collection, configuring binning, logging, travel direction detection, viewing diagnostics, fault monitoring and parameter setting features)

1. The detector unit shall be capable of remote configuration, system diagnostic measurements and real-time data collection. A communication link shall provide remote access to the detector, for reading its configuration, for fault identification and verification, for real-time monitoring and data collection on two channels. The link shall provide optional password protection to change unit configuration settings. Interface software shall display and report current loop inductance measurements, current or last (historical) fault information, and information specific to the last vehicle detected and vehicle counts. Vehicle information shall include vehicle change of inductance, speed, length and time over loop.

2. A Windows™ based interface and data acquisition software program shall be provided to perform these functions via a remote reporting device running under a Windows™ 95 or Windows™ NT 4.0 operating system.

3. The software shall establish and maintain the communication link to a remote reporting device via a field modem or by direct connection to one of the serial ports on the detector.

4. The software shall be organized by application to simplify setup and monitoring of channel activity measurements, traffic counting, long-loop count, logging of vehicle speed and vehicle length, loop to loop travel time, detect durations, binning of count and occupancy, and sensing of vehicle travel direction with directional detection and call duration.

5. The software shall allow selection of PC's communication port and baud rate, and allow selection of English or metric measurements.

   Baud rate options shall be 1200, 2400, 4800, 9600, or 19200 BPS.

   Direct communication shall be via PC's serial port or with telephone modem communications using one of the PC's COM ports.

6. The software shall include a phone book and dialing utility.

7. The interface and data acquisition software shall provide a Read from Device command on the File menu.

   It shall also provide for a unit address to be selected and allow the selection of a "wildcard" address to establish remote communication.

8. The Initial screen shall open with a Settings icon, a Real-Time Vehicle Logging icon and a Traffic Data Binning icon. After communications have been established with a detector, the other icons shall appear. These shall include the Real-Time Activity Monitoring icon, Force ALL Outputs and LEDs icon, a Reset icon and the Scan-Time icon.

9. A Settings window shall be divided into nine tabs to organize the detector settings by functional application.

10. A General tab shall allow selection of the configuration source to be either from EEPROM or switches, the oscillator frequency for the unit, the vehicle count period and channel sensitivity and mode. When the interface software reads settings from a unit, whichever configuration source is currently active shall determine which settings are displayed in boldface type (EEPROM or switch settings).

11. A Communications tab shall provide for the setting of a field modem command string, transmit delay, selection of the communication baud rates on the front and rear ports, for setting a programmable address and to enable a backpanel address. There shall be provisions to establish, cancel and change a password.

    If password protection is set up in a detector, the unit shall not respond to any requests to perform a reset or change settings until the correct password has been issued. After a verified password has been issued the detector shall respond to all requests for reset or settings changes for 60 minutes. After 60 minutes the unit shall revert back to password protected mode until the password has been issued.

12. Reset shall cause immediate reinstatement of password protection. Most setting changes initiate a reset.

13. A Timing tab shall provide for setting the Delay or Extend Time options and the timing increments for each channel. There shall be an option to select "Enable" Green gating to condition the timing functions to green inputs.

14. A Microloop tab shall provide for selecting microloop mode of operation and setting some of the parameters that are unique to the performance of microloop sensors in special applications.

15. A Long-loop tab shall provide for selecting the option to count vehicles over long loops set to operate in Presence mode. Setup options shall be included to allow for calibrating the algorithm to improve count accuracy on loops of from 20 feet long to 60 feet long. Vehicle counts shall be available over the serial communication ports.

16. A Directional tab shall provide the option of setting up travel direction sensing on channel pairs 1 & 2. With the paired channels connected to 6-foot by 6-foot loops that are overlapped by three feet, vehicles shall be counted in both directions. The directional detection call output shall be assigned to the last loop a vehicle crosses when traveling in the direction that is to be detected. Call Duration shall be selectable for the directional output on the trailing channel of the paired sets.

17. An Output tab shall provide for the option to enable the Status Output for NEMA TS2 Type controllers. Software provision shall also exist to disable the "fail-safe" Call Output for unique system sampling applications.

18. A Noise Immunity tab shall provide for selecting several noise options including a power line filter which can be enabled.

19. An Adapt tab shall provide for selecting the adaptation parameters for the detector unit, to modify default operation.

20. A Real-Time Vehicle Logging icon shall provide for setting up channels to perform vehicle speed and length measurements.

    Facilities shall be provided to insert a loop description (ID label), a loop type (configuration) and a calibration utility to select effective magnetic field loop sizes to improve measurement accuracy. The utility shall also provide for setting up loop assignments and leading edge distances from loop to loop to calculate vehicle speeds. This information shall be saved in the detector's EEPROM.

Facilities shall be included to activate and view the log with channel IDs, the loop descriptions, dates, times, speeds, lengths, durations, loop to loop times displayed in real-time. Provisions shall be made to save the log to a file and print the log.

21. Traffic Data Binning icon shall open a window to setup and collect binned count and occupancy data from the detector.

    A tab shall provide for setting up the channels to be binned, the start date and time, the end date and time, and the binning intervals.

    The software shall inform the user when the detector will run out of memory based on the setup information provided. If continuous binning is selected the data shall "wrap-around" so that the oldest data will be overwritten with the latest entries.

22. A Real-Time Activity window shall be provided to display all current detection information pertaining to each channel, including current measurements, last fault (or historical fault) information, plus information specific to the last vehicle detected and traffic counts.

    Measurements shall include: loop inductance, loop frequency, reference frequency, green input state and loop status.

    Last Fault shall include fault type, time and date.

    Last Vehicle data shall include Delta L in nanohenries, detect duration, detect time, and detect date.

    Count shall display total count or directional count and the count period remaining.

23. The Activity window shall include a freeze capability to capture the current activity information and hold it for analysis while the software continues to display the most recent changes.

24. A utility window shall be included to verify the operation of a detector's outputs and LEDs and confirm the wiring of a control cabinet to issue the call output to a device or controller. This utility shall allow selection of specific Detect LEDs, Call Outputs, Fault LEDs, and channel Status Outputs to be "forced" ON or OFF for testing the system.

25. A utility window shall be included to remotely reset a detector. It shall be possible to select specific channels, all channels or the entire unit.

26. A utility window shall be included to provide a real-time view of the detector's self-measured scan-time. This interactive utility shall continuously read and display the detector's scan-time and display the theoretical detection performance based on user-selectable parameters such as loop to loop spacing, effective field lengths, channel sensitivity settings, and the effects of any noise immunity options selected.

27. The software shall allow printing of settings, activity measurements, and binned and logged vehicle data.

28. A comprehensive ON-LINE Help utility shall be included with detailed descriptions of unit features and setup information. The Help text shall include hyperlinks to all subjects related to applications or setup sequences. Help screens shall include a print function to print the page.

PART 3 EXECUTION

3.01 LOOP DETECTOR INSTALLATION

A. Each loop and its lead-in wires shall be separate and independent from any others. A minimum of twelve (12) inches shall be maintained between adjacent, parallel sawcuts. The Contractor shall be responsible for a good mechanical and electrical installation of the loop itself and the two lead-wires to and through the curb to the adjacent pull box or hand-hole. This responsibility shall remain with the Contractor until such time as the City can hook up, tune and test the loop for satisfactory operation.

B. Saw Cut: The sawed slot shall be 3/8 inch in width and a minimum of 2 inches in depth for concrete and asphalt. Sawcut shall be deep enough to provide one full inch of sealant above the installed loop wire(s). A sawed slot(s) must be continued from the nearest side or corner of the loop to the conduit thru the curb for the twisted lead-in wires to the adjacent pull box or junction point. The slots shall be brushed and cleared of any debris. Dry moisture-free compressed air shall be used to clear away the remaining dirt, dust and moisture. A one inch hole shall be drilled at each corner to eliminate sharp bends and damage to wire. Contractor shall remove sharp corner as illustrated on detail 3900-08 . Sawcuts shall overlap a sufficient distance to provide continuous full depth of the sawcut. There shall be no angle cuts for corners.

It is the City's desire that loops are not installed across pavement joints. If a proposed loop would cross an existing pavement joint, the Contractor shall request confirmation from the Engineer. With prior approval from the Engineer, City shall

pay for additional sawcut to divide the proposed detection area into separate loops which cover the same effective area without crossing pavement joints.

C. The number of turns of loop wire shall be as shown on the drawings, or as follows:

Loop Perimeter, feet	Number of Turns
< 20 feet	4
<= 30 feet	3
> 30 feet	2

D. Positioning Wire: One continuous, unbroken, and unspliced length of wire shall be used to form the loop and its lead-in wires. This wire shall be of sufficient length for the required number of turns plus the distance to the adjacent pull box. The lead-in portion (pair of wires forming ends of loop) shall be twisted a minimum of five (5) turns per linear foot before insertion into slot. The twisted turns shall continue through the conduit at the curb and on to the pull box. Use a blunt tool to push wires into slot. The wires shall be held in place with rubber wedges or sections of insulation.

The sawcut, and loop wire installation shall be inspected by the City's Inspector prior to placement of sealant. Failure to obtain inspection prior to placement of sealant will be reason to require the Contractor to completely reinstall the loop.

E. Sealing: Before and after sealing wires in roadway, test the pair of wires at the pull box for continuity and resistance with an ohm meter. In addition, the integrity of the insulation shall be checked by applying a megger between each end of the loop lead-in and the nearest reliable electrical ground (e.g., street light, hydrant, etc.). In the event that no available ground exists, a suitable ground shall be established for the measurement (e.g., driven metal spike). A resistance of less than ten (10) megohms to ground indicates a faulty installation and must be corrected. Final readings on each detector shall be given to the Inspector or Engineer on the job.

F. Sealer: Use embedding sealer as per manufacturer's instruction or as directed by Engineer. Loop sealant shall be allowed to cure for a minimum of three (3) hours prior to opening the lane for traffic.

G. Conduit: Wires from curb to pull box must be enclosed in conduit as indicated on plan set (1 in. min.) and twisted a minimum of five (5) turns per foot. The conduit shall be rigid in place.

END OF SECTION

SECTION 16730

INTELLIGENT TRANSPORTATION SYSTEM (ITS) CONTROLLER CABINET ASSEMBLY

PART 1 GENERAL

1.01 SECTION INCLUDES

This specification defines the minimum detailed requirements applicable to traffic signal controller cabinets. The intent of specification is to set forth the minimum acceptable electrical and mechanical design and requirements within which all equipment operates satisfactorily and reliably, and the means by which the equipment shall be tested to determine whether it shall so operate.

These specifications describe the materials necessary to provide Intelligent Transportation System (ITS) traffic signal controller cabinets for use with Type 2070 Advanced Transportation Controller (ATC). The Type 2070 Controller Unit to be furnished with the ITS Controller Cabinet Assembly shall meet the requirements of Specification Section 16731.

1.02 UNIT PRICES

A. Measurement

Each ITS Controller Cabinet Assembly shall include a Model 2070 Controller Unit (Section 16731) and other components as specified in Table 2 of Section 16730.2.10.B of this specification. This Item will be measured as each controller cabinet assembly by type furnished.

B. Payment
The materials furnished in accordance with this Item and measured as provided under "Measurement" as each specified type assembly furnished.

1.03 WARRANTY

A. All materials furnished will be warranted by the supplier for a period of two (2) years from date of delivery.

1.04 CABINET OVERVIEW

A. The cabinet utilizes concepts from both the NEMA and Model 170 traffic signal equipment. From the Model 170 it takes the concept of rack-mounted subassemblies. From NEMA, it borrows the basic serial connections between the controller and subassemblies.

The cabinet provides the communications paths between the various subsystems, as well as a system to monitor their operation. The cabinet provides power supplies suitable for the various electronic subassemblies mounted throughout the cabinet. The ITS cabinet is an extension of the original cabinet used for the Model 170 controller in that it is based upon the EIA/TIA standard 19 in. equipment rack. In this rack, the subsystems that comprise the field controller assembly are mounted in a manner so as to facilitate user access. The controller and other subassemblies are also similar in concept to the Model 170 system in that they are essentially interchangeable circuit cards or device cages. This does not preclude other cabinet constructs that may be proposed for inclusion in this standard at some later date. An example might be that retrofitting to existing NEMA TS1 and TS2 type cabinets or other more specialized cabinets might one day be accommodated, so long as the architecture of the serial buses are maintained.

Each of the subassemblies is connected to the controller using a serial bus, similar to that used in the NEMA TS2 Type 1 specification. Using a serial interconnection between subassemblies allows for easy system expansion. The system supports up to twenty-eight switch packs (also known as solid state load switches) in six and fourteen switch pack increments and ninety-six detector channels in twenty-four channel increments. This serial bus may also be extended using inexpensive fiber optic transceivers, as an example, insomuch as multiple remote switching/data collection cabinets can be supported from a single controller.

The ITS Cabinet is essentially a platform within which modular components may be added to serve a variety of ITS applications.

Cabinet Subsystems. The major subsystems that may be installed in a cabinet housing are:

Controller.

Input Assemblies.

Output Assemblies.

Power Distribution Assemblies.

Fiber Optic Termination Panel.

Service Panel Assembly.

DC Power/Communications Assembly & Extension.

RAW/CLEAN AC Power Assembly & Extension.

Cabinet Monitoring System.

The cabinet is constructed in a modular manner with power distribution and serial connectors conveniently located throughout the cabinet to facilitate a wide variety of configurations and future expansion. Each of these subassemblies is discussed below. A separate standard describes the controller.

Input Assembly. The input assembly provides services for the typical inductive loop detectors currently in use, as well as other more advanced systems that might provide the controller with serial data instead of the typical contact closure. Each assembly accommodates one Serial Interface Unit (SIU) to communicate with the controller. The rack has space for twelve two-channel detector units or six four-channel detector units. The system can address (i.e. the Serial Bus addressing structure supports) up to four of these assemblies.

The detectors in the assembly can communicate to the controller in the form of either a contact closure or use of serial data strings. The back plane of this assembly includes a serial bus to transmit data to and from detectors. This serial data is then transmitted to the controller by Serial Bus 1, which is described below. This allows for the use of "smart" detectors that can pass additional information such as vehicle classification, Automatic Vehicle Identification/Location information, speed information directly to the controller unit. Each slot provides general purpose power and input/output signals and a serial interface.

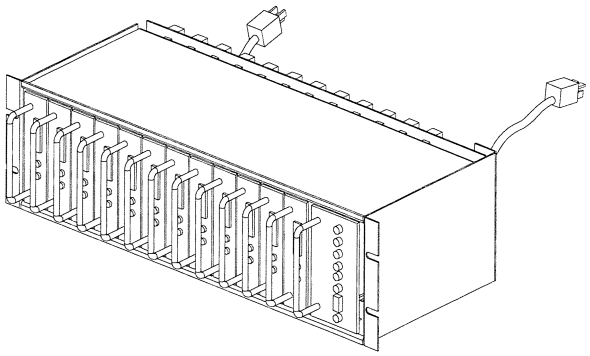

Input Assembly

The input "slots" can also accommodate the standard collection of Model 170 or NEMA TS2 type cards, including preemption devices, and isolation modules, using the contact closure interface.

Output Assembly 6 and 14 Pack. The output assembly handles the switching of 120 VAC power to the signal heads. There are two versions of this assembly, one to accommodate six switch packs and one for fourteen switch packs. It also has an SIU and an Auxiliary Monitor Unit (AMU). The AMU is described in more detail in a following section. The output assembly includes provisions for managing cabinet flash with Flash Transfer Relays and flash configuration jumpers.

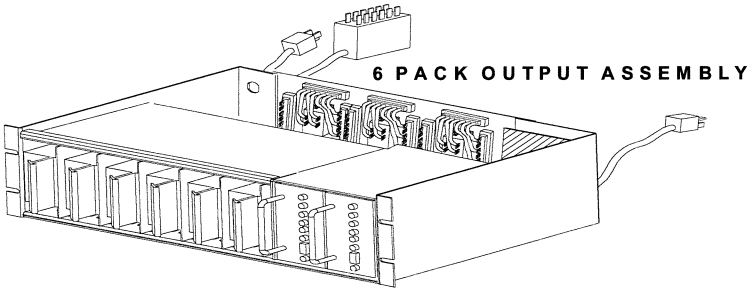

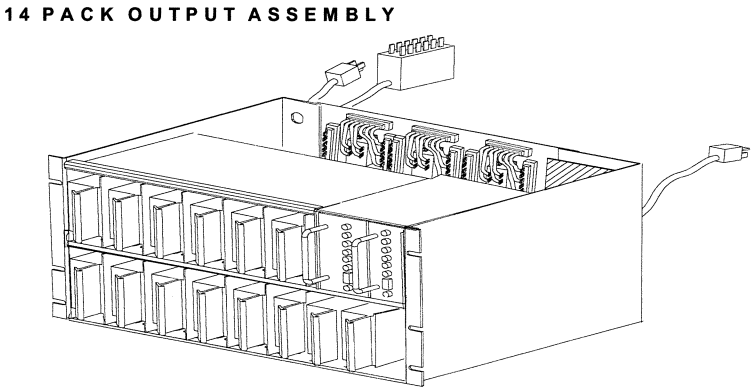

To support the AMU function of current monitoring, the output assembly includes current monitoring transformers for each switch pack. These current monitor transformers enable the detection of a "no-load" condition on a signal without having to wait for the signal to cycle.

The system can address (i.e. the Serial Bus addressing structure supports) ten combinations of six switch and fourteen switch assemblies. For a maximum configuration the system can address two fourteen switch pack modules for a total of twenty-eight switch packs or physical channels, plus four virtual channels for a total of thirty-two logical channels.

The field wires can also be connected to the back of this unit using plug-in type connectors. The field wires are terminated in these connectors, which are then be plugged into the back of the Assembly. This facilitates the change out of the assembly or the whole controller and housing assembly.

Power Distribution Assembly (PDA 5 IP or EP). The PDA provides protected power distribution to the various devices and subassemblies within the cabinet. This assembly also houses Emergency Flasher Units, control relays, signal power contactor, and the Cabinet Monitor Unit (CMU).

The PDA IP houses two low voltage DC power supplies. One provides power to 24 VDC devices, the other to 12 VDC devices. Each of these power supplies is packaged as a slide-out subassembly.

The PDA EP provides protected power distribution to the various devices and subassemblies within the cabinet. This assembly also houses Emergency Flasher Units, control relays, signal power contactor, and the Cabinet Monitor Unit (CMU).

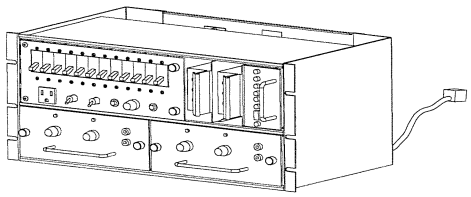

PDA 5 IP with internal Power Supplies

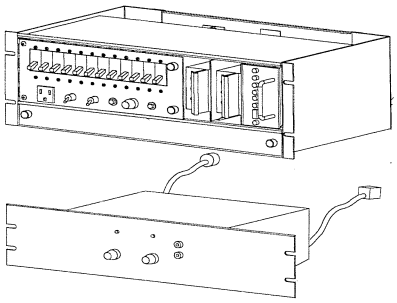

PDA 5 EP with Rack Mount Power Supplies

Figure 1
PDA 5 IP and EP

The PDA EP requires an external rack mounted low voltage DC power supply for power to 24 VDC devices such as detectors and switchpacks. Dual Rack Cabinets may require an additional 12 VDC Supply if more than 3 Input Assemblies are required. Each of these power supplies is packaged as a rack mount assembly.

Modular Buses. The modular buses are assemblies that are mounted on the rack rails in the back of the cabinet and provide a pluggable interconnection of the Assembly units to the controller unit and power. These assemblies control and protect the wiring between these key subsystems, provides additional shielding from electromagnetic interference. Their biggest benefit is to simplify cabinet assembly.

The cabinet may have any combination of these bus units depending upon the particular application. For example, a cabinet designed as a communications hub may only have a Modular Power Assembly unit. A small pole mounted cabinet (proposed but not included in this standard) may not have any of them and those installed in Cabinet Housing 2 would not use the extensions.

Raw/Clean AC Power Assemblies. The Raw/Clean AC Power Assembly attaches to the right rear rack rail. This assembly is internally wired to provide 120 VAC "clean power" to the controller, output assemblies and auxiliary devices needed within the Cabinet, as well as Signal and flasher power from the PDA is distributed by P1 and S1 to S4 to the Output Assemblies. The Raw/Clean Bus Assemblies are available in two configurations, a four socket and a two socket version. With the advent of the 14 Pack Output Assembly the two socket version provides adequate power distribution for most applications and with the additional clean power sockets it will eliminate the need for the extension. Extension Bus Assemblies are provided for additional clean power service when needed and room permits. A AC Clean Modular Assembly is used to power the left hand rack in Housing 3. This assembly is primarily meant for those cabinets without output assemblies or for use in the dual rack system.

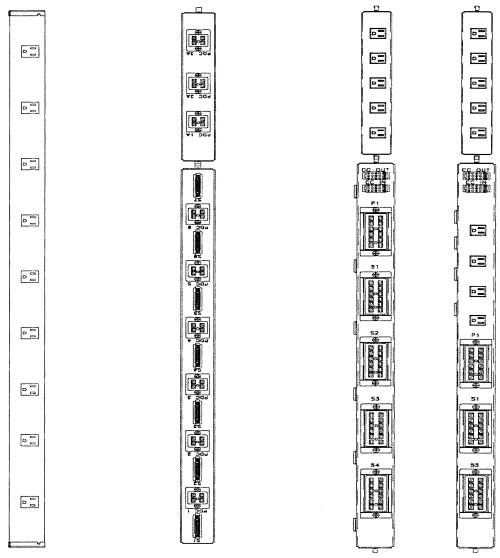

Modular AC Clean Assembly | DC Power/COMM Modular Assembly | Raw/Clean AC Power Assembly 4 Socket 2 Socket

DC Power /Communications Assembly and Extension. This modular bus assembly provides 12 VDC and 24 VDC power to cabinet .assemblies. It also houses the wiring for the serial buses 1 and 2 communications between the SIUs, CMUs, AMUs and the ATC Controller Unit. The Extension provides additional DC Power when needed.

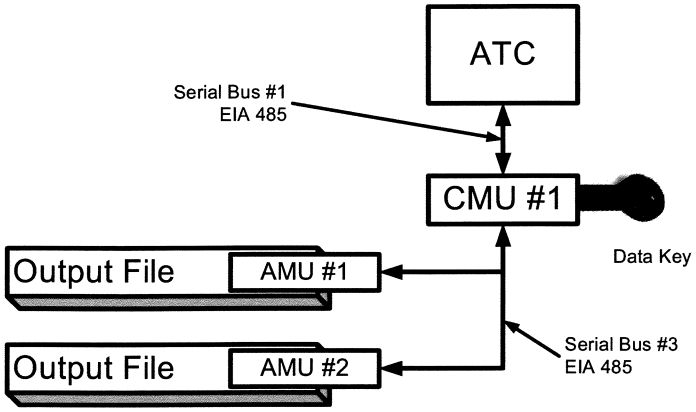

Cabinet Monitoring System

Cabinet Monitoring System. The cabinet monitoring system provides a fail-safe mechanism for the entire collection of subassemblies. The system for the ATC is a departure from its predecessors in that it has been split into sub components, the Cabinet Monitor Unit (CMU) and the Auxiliary Monitor Unit (AMU). The adjacent diagram illustrates the architecture.

The real power of this architecture is that it allows the user a much greater degree of flexibility in cabinet configurations than previously possible. This diagram shows the control system for a single intersection. The use of serial communications to the CMU is a very powerful concept. Serial communications to multiple CMUs allow for the response to a conflict at a single intersection and not impact other intersections/ramps/etc. operated by the same controller. Therefore, one intersection could go to flash independently of the others, provided that each cabinet (or each independent output assembly) has a PDA within which a CMU is installed.

Cabinet Monitor Unit (CMU). The CMU is housed in the PDA. There should only be one of these installed in each cabinet, or each grouping of output assemblies. It is the main processor unit of the cabinet monitoring system. It monitors main cabinet functions, such as the condition of cabinet power, door status, and status of the flasher. It communicates with the AMUs located in the output assemblies and compares requested actions (from the controller) with the actual cabinet operation (switch pack outputs) to detect errors, conflicts, and other anomalies. It can then direct the cabinet to a flashing or fail-safe condition.

The exception here is the Cabinet Housing 3, which could contain two separate groupings of input, output and power distribution assemblies for two separate intersections all controlled by a single controller.

The configuration and operational characteristics of the CMU is determined by software. This programming may be customized to user needs and desires. There is also a specific reporting format, in order to address the minimum mandatory functionality of this unit. The minimum functionality is at least that provided by the NEMA TS2 Malfunction Monitoring Unit.

To allow full programmability of the CMU, without a massive number of physical jumpers, the Model 210 and NEMA diode based conflict programming board is

replaced by a serial memory key. This serial memory key contains all information to configure the monitoring system as well as other cabinet configuration information.

The CMU might carry an address so that multiple CMUs could be used to provide multiple intersection control assemblies controlled by a single controller. The CMU addressing is accomplished through address jumper programming on the rear of the PDA. A maximum of four CMUs are allowed.

Auxiliary Monitor Unit (AMU). The AMU is housed in each output assembly. This unit does the basic monitoring of the output of the switch packs and reports their status to the CMU. It is essentially a device that monitors the output voltage and current of each circuit of each switch pack. This module communicates to the CMU via Serial Bus 3. Having this unit as a separate module from the CMU allows greater modularity of the cabinet. The cabinet can contain any grouping of between one and four output assemblies. However, the grouping of output assemblies and associated CMU connected via a single Serial Bus 3 would remain as an associated grouping and not be split to different cabinets.

Serial Memory Key. This key is essentially a non-volatile computer memory device. There are two of these devices in the system, one in the controller and one in the CMU. It contains all the specific information to define unit operations and malfunctions. In general, the key in the CMU replaces the Model 210 and NEMA Conflict Monitor Programming Card, plus any information previously programmed into those units. The CMU serial memory key does not contain the controller operating and application software. Start-up processes within the cabinet allow the CMU, and the controller, to verify a compatible configuration before starting normal operation.

Serial Memory Key

Cabinet Communications Systems. The controller communicates with the various cabinet subassemblies via a serial bus arrangement. There are three separate serial buses employed. These buses are similar to those used in the NEMA TS2 specification and communicate using a Synchronous Data Link Control (SDLC) protocol. The Cabinet Block Diagram illustrates how this system is configured. The electrical characteristics of this communications circuit are defined by EIA/TIA 485 specifications.

Serial Interface Unit (SIU). The SIU functions as the cabinet communications and control unit. The SIU communicates with the ATC Controller Unit through Serial Bus 1 and Serial Bus 2 via the Modular Bus Assembly. In the case where the input and/or output assembly is mounted remotely, communications would be over a data grade interconnect cable. This cable might be a fiber optic cable because of its high noise immunity and reliability.

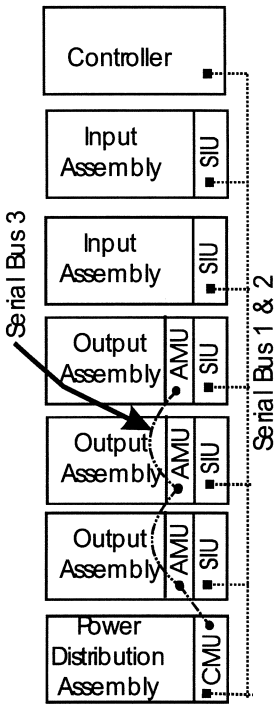

Cabinet Monitor System Block Diagram

A SIU is needed for each input assembly and each output assembly connected to the ATC Controller Unit.

Serial Bus 1. This bus communicates real time information required to operate the system. It handles the highest priority, time sensitive data exchange between the SIUs in the input and output assemblies, controller unit and the CMU. An example would be the commands to the switch packs to change signal color or data from detection inputs. Serial Bus 1 is designed for a communications rate of 614,400 bits per second.

Serial Bus 2. This bus communicates less time critical information between the SIUs in the input and output assemblies, and the controller unit. An example would be servicing requests for general program information as might be requested from a central computer system. Serial Bus 2 is designed for an allowable communications rate of 614,400 bits per second.

Serial Bus 3. This bus is dedicated to communications between the AMUs and the CMU. It is used to allow the CMU to monitor the various voltages, operating conditions, and currents in the output assemblies to determine actual switch pack conditions. Serial Bus 3 has an operating communications rate of 153,600 bits per second.

Service Assembly. The service assembly houses critical modules used within the rack system. Each assembly accommodates three Serial Interface Units (SIU), three Auxiliary Monitor Units (AMU), and one Cabinet Monitor Unit (CMU).

Standard Cabinet Assemblies. There are three different cabinet assemblies, which consist of a specific collection of the subassemblies described above. Each of these assemblies is installed in a cabinet that is designed for a particular group of applications and is sized to hold the equipment required. The cabinets have doors both on the front and the back. The equipment is mounted on a standard EIA 19 in. rack that is fitted inside each cabinet.

Each cabinet includes at least the following common features:

- Enclosure
- Doors
- Latches/Locks
- Hinges and Door Catches
- Gasketing
- Police Panel
- Ventilation and Air Filtration
- Assembly Supports and Mounting

Cabinet Housing 1. This Cabinet Housing is very similar to the Type 332 series of cabinet used for the Model 170 Controller system. It is a single rack cabinet with sufficient capacity to operate a full eight-phase traffic signal. Dimensions are width 24.25 in., depth 30.25 in., and height 66.78 in.

Cabinet Housing 2. This shorter version of Cabinet Housing 1 is very similar to the Type 336S series of cabinet used for the Model 170 Controller system and is meant for applications that require less space for inputs and outputs. This cabinet might be found at small two through eight-phase traffic signals, ramp meters, data stations and similar less space demanding applications. Dimensions are width 24.25 in., depth 20.25 in., and height 46.25 in.

Cabinet Housing 3. This is a large two rack, four door cabinet with bottom details and a bolt pattern similar in size to the NEMA P cabinet. It is meant for installations requiring a lot of equipment. An example application may be a traffic signal controller with a communications hub or a ramp meter, or perhaps additional input/output assemblies. Dimensions are width 44.50 in., depth 26.00 in., height 66.38 in.

1.05 CABINET REQUIREMENTS

A. All furnished equipment must be new and unused. Vacuum or gaseous tubes and electro-mechanical devices (unless specifically called out) will not be used.

1. References. Reference is made to the following documents:

   ATC 2070 v01.05, Advanced Transportation Controller (ATC) Standard for the Type 2070 Controller, dated March 29, 2001

2. Interchangeability. Assemblies and their associated devices must be electrically and mechanically interchangeable at both the assembly and device levels:

ASSEMBLIES	ASSOCIATED DEVICES
Input Assembly	- Model 222, 232 & 224 Sensor Unit - Model 242 and 252 Isolator Unit - Type 218 Serial Interface Unit (SIU)
Output Assembly	- Model 200 Switch Pack Unit - Model 205 Transfer Relay Unit - Model 214 Auxiliary Monitor Unit - Type 218 SIU Unit
PDA ITS	- Model 204 Flasher Units - Model 212 Cabinet Monitor Unit - Model 216-12 & 216-24 Power Supply Units

Service Assembly -Type 218 Serial Interface Unit (SIU)
-Model 214 Auxiliary Monitor Unit (AMU)
-Model 212 Cabinet Monitor Unit (CMU)

1.06 DOCUMENTATION

A. Manuals. Two copies of Manual Documentation must be supplied for each item purchased. The manual must be bound in durable covers made of either 65-pound stock paper or clear plastic. The manual must be printed on paper measuring 8-1/2 in. by 11 in., with the exception that schematics, layouts, parts lists and plan details may be on sheets measuring 11 in. by 17 in., with each sheet neatly folded to a size of 8-1/2 in. by 11 in. A minimum of Times New Roman or Arial 10 point font must be used for all manual text, excluding drawings and schematics. Drawing text may use a smaller font size.

1. Cabinet Wiring Diagrams. Two copies of Cabinet Wiring Diagrams must be included in each cabinet. Cabinet Wiring Diagrams must be on non-fading, minimum 22 in. x 34 in., sheets.

a. Manual Contents. Each manual must utilize the following outline, to the extent possible:

(1) Table of Contents

(2) Glossary

(3) Manufacturer Contact Information

(a) Address

(b) Telephone Number

(c) Fax Number

(d) General Email Address

(4) General Description

(5) General Characteristics

(6) Installation

(7) Adjustments

(8) Theory of Operation

(a) Systems Description (include block diagram).

(b) Detailed Description of Circuit Operation.

(9) Maintenance

(a) Preventive Maintenance.

(b) Trouble Analysis.

(c) Trouble Shooting Sequence Chart.

(d) Wave Forms.

(e) Voltage Measurements.

(f) Alignment Procedures.

(10) Parts List (include circuit and board designation, part type and class, power rating, component manufacturer, mechanical part manufacturer, data specification sheets for special design components and original manufacturer's part number).

(11) Electrical Interconnection Details & Drawings.

(12) Schematic and Logic Diagram

(13) Assembly Drawings and a pictorial diagram showing physical locations and identification of each component or part.

(14) The date, serial numbers, model numbers and revision numbers of equipment covered by the manuals must be printed on the front cover of the manuals.

b. Manual Pouches. Manuals for the cabinet must be furnished in a weatherproof plastic pouch placed in the cabinet.

c. Draft Manual. A preliminary draft of the manual must be submitted, when required, to the CITY OF HOUSTON for approval prior to final printing.

B. Packaging. Each item delivered must be individually packed in its own shipping container. When loose Styrofoam is used for packing the item, the item must be sealed in a plastic bag to prevent direct contact with the Styrofoam.

C. Delivery. Each item delivered for testing must be complete, including manuals, and ready for testing.

PART 2 PRODUCTS

2.01 MATERIALS

A. All sharp edges and corners must be rounded and free of any burrs.

1. Aluminum. Aluminum sheets must be Type 3003-H14 or Type 5052-H32 ASTM Designation B209 aluminum alloy. Rod, Bar and Extruded must be Type 6061-T6, or equal.

2. Stainless Steel. Stainless Steel sheets must be annealed or one-quarter-hard complying with the ASTM Designation: A666 for Type 304, Grades A or B, stainless steel sheet.

3. Cold Rolled Steel. Cold Rolled Steel sheet, rod, bar and extruded must be Type 1018/1020.

   a. Plating. All cold roll steel must be plated. All plating must be either cadmium plating meeting the requirements of Federal Specification QQ-P-416C, Type 2 Class 1 or zinc plating meeting the requirements of ASTM B633-85 Type II SC4.

B. Mechanical Hardware. All bolts, nuts, washers, screws, hinges and hinge pins must be stainless steel unless otherwise specified.

C. Electrical Isolation. Within the circuit of any device, module, or Printed Circuit Board (PCB), electrical isolation must be provided between DC logic ground, equipment ground and the AC-conductor. They must be electrically isolated from each other by 500 Megohms, minimum, when tested at the input terminals with 500 VDC.

D. Daughter Boards. Keyboards and LCD/LED Displays are considered daughter boards. Daughter boards must be mechanically secured with a minimum of four spacers/metal screws. Connectors must be either Flat Cable or PCB Headers. Components are allowed to be mounted under the daughter board.

2.02 COMPONENTS

A. General. All components must be second sourced and be of such design, fabrication, nomenclature or other identification as to be purchased from a wholesale distributor or from the component manufacturer, except as follows:

   1. When a component is of such special design that it precludes the purchase of identical components from any wholesale distributor or component manufacturer, one spare duplicate component must be furnished with each 20, or fraction thereof, components used.

   2. The electronic circuit design must be such that all components of the same generic type, regardless of manufacturer, function equally in accordance with the specifications.

B. Electronic Components.

   1. No device to be socket mounted unless specifically called out.

   2. No component to be operated above 80% of its maximum rated voltage, current or power ratings. Digital components must not be operated above 3% over their nominal voltage, current or power ratings.

   3. Components must have been kept in the original packaging and stored in a proper environment, according to the manufacturers instructions. The design life of all

components, operating for twenty-four hours a day and operating in their circuit application, must be ten years or longer.

4. Components must be arranged so they are easily accessible, replaceable and identifiable for testing and maintenance. Where damage by shock or vibration exists, the component must be supported mechanically by a clamp, fastener, retainer, or hold-down bracket.

5. The Manufacturer must submit detailed engineering technical data on all components at the request of the CITY OF HOUSTON. The Manufacturer must certify that the component application meets the requirements of this standard.

C. Capacitors. The DC and AC voltage ratings, as well as the dissipation factor, of a capacitor must exceed the worst-case design parameters of the circuitry by 150%. Capacitor encasements must be resistant to cracking, peeling and discoloration. All capacitors must be insulated and be marked with their capacitance values and working voltages. Electrolytic capacitors must not be used for capacitance values of less than 1.0 microfarad and be marked with polarity.

D. Potentiometers. Potentiometers with ratings from 1 to 2 watts must meet Military Type RV4 requirements. Under 1 Watt potentiometers must be used only for trimmer type function. The potentiometer power rating must be at least 100% greater than the maximum power requirements of the circuit.

E. Resistors. Fixed carbon film, deposited carbon, or composition-insulated resistors must conform to the performance requirements of Military Specifications MIL-R-11F or MIL-R-22684. All resistors must be insulated and be marked with their resistance values. Resistance values must be indicated by the EIA color codes, or stamped value. The value of the resistors must not vary by more than 5% between -37 degrees C and 74 degrees C.

1. Special ventilation or heat sinking must be provided for all 2- watt or greater resistors. They must be insulated from the PCB.

F. Semiconductor Devices.

1. All transistors, integrated circuits, and diodes must be a standard type listed by EIA and clearly identifiable.

2. All metal oxide semiconductor components located in a sub-assembly must contain circuitry to protect their inputs and outputs against damage due to high static voltages or electrical fields.

3. Device pin "1" locations must be properly marked on the PCB adjacent to the pin.

G. Transformers and Inductors. All power transformers and inductors must have the manufacturer's name or logo and part number clearly and legibly printed on the case or lamination. All transformers and inductors must have their windings insulated, be protected to exclude moisture, and their leads color coded with an approved EIA color code or identified in a manner to facilitate proper installation.

H. Triacs. Each triac with a designed circuit load of greater than 0.5 Amperes at 120 VAC must be mounted to a heat sink with thermal conductive compound or material, in addition to being mechanically secured.

I. Circuit Breakers. Circuit breakers must be listed by UL or ETL. The trip and frame sizes must be plainly marked (marked on the breaker by the manufacturer), and the ampere rating must be visible from the front of the breaker. Contacts must be silver alloy and enclosed in an arc quenching chamber. Overload tripping must not be influenced by an ambient air temperature range of from -18 degrees C to 50 degrees C. The minimum Interrupting Capacity must be 5,000 Amperes, RMS when the breaker is secondary to a UL approved fuse or primary circuit breaker and both breakers in concert provide the rated capacity. For circuit breakers 80 Amperes and above, the minimum interrupting capacity must be 10,000 Amperes, RMS. Circuit breakers must be the trip-free type with medium trip delay characteristic (Carlingswitch Time Delay Curve #24 or equal).

1. Load Circuit Breaker Auxiliary Internal Switches. The Load Circuit Breakers located on the PDA that are used to control Output Assembly Model 200 Switch Packs must have auxiliary switches. The auxiliary switches must "open" when the load breaker has tripped and the system will transfer the power from the Main Contactor to the Flash or Blank condition.

J. Fuses. All Fuses that are resident in a bayonet style fuse holder must have the fuse size rating labeled on the holder or on the panel adjacent to the holder. Fuses must be easily accessible and removable without use of tools.

K. Switches.

1. Dip. Dual-inline-package, quick snap switches must be rated for a minimum of 30,000 operations per position at 50 milliamperes, 30 VDC. The switch contact resistance must be 100 milliohms maximum at 2 milliamperes, 30 VDC. The contacts must be gold over brass.

2. Logic. The switch contacts must be rated for a minimum of 1 Ampere resistive load at 120 VAC and be silver over brass (or equal). The switch must be rated for a minimum of 40,000 operations.

3. Control. The switch contacts must be rated for a minimum of 5 Amperes resistive load at 120 VAC or 28 VDC and be silver over brass (or equal). The switch must be rated for a minimum of 40,000 operations.

4. Power. Ratings must be the same as CONTROL, except the contact rating must be a minimum of ten Amperes at 125 VAC.

L. Terminal Blocks. The terminal blocks must be barrier type, rated at 20 Amperes and 600 VAC RMS minimum. The terminal screws must be 0.3125 in. minimum length nickel plated brass binder head type with screw inserts of the same material. Screw size is called out under the associated file, panel or assembly.

M. Screw Lug and Cam Driven Connectors. Provided the connectors mate, screw lug cam driven devices or crimp pin connectors must be allowable if the interface is part of a harness. For field termination, screw lug and cam driven assemblies are interchangeable for field wiring termination, provided they both accommodate 22-gauge wire on the inputs and 22-gauge wire on the outputs.

N. Wiring, Cabling and Harnesses.

1. Harnesses must be neat, firm and properly bundled with external protection. They must be tie-wrapped and routed to minimize crosstalk and electrical interference. Each harness must be of adequate length to allow any conductor to be connected properly to its associated connector or termination point. Conductors within an encased harness have no color requirements. Printed circuit motherboards are to be used where possible to eliminate or reduce cabinet wiring.

2. Wiring containing AC must be bundled separately or shielded separately from all DC logic voltage control circuits.

3. Wiring must be routed to prevent conductors from being in contact with metal edges. Wiring must be arranged so that any removable assembly may be removed without disturbing conductors not associated with that assembly.

4. All conductors, except those that can be readily traced, must be labeled. Labels attached to each end of the conductor must identify the destination of the other end of the conductor.

5. All conductors must conform to MIL-W-16878E/1 or better and have a minimum of 19 strands of copper. The insulation must be polyvinyl chloride with a minimum thickness of 10 mils or greater. Where insulation thickness is 15 mils or less, the conductor must conform to MIL-W-16878/17.

6. Conductor color identification must be as follows:
   AC- circuits - white
   Equip. Ground - solid green or continuous green color with 1 or more yellow stripes.
   DC logic ground - continuous white with a red stripe.
   AC+ circuits - continuous black or black with colored stripe
   DC logic ungrounded or signal - any color not specified

O. Indicators and Character Displays. All indicators and character displays must be readily visible at a radius of up to 1.2 m (4 feet) within the cone of visibility when the indicator is subjected to 97,000 lux (9,000 foot-candles) of white light with the light source at 45 degrees (+/-2 degrees) to the front panel.

1. Indicators. All indicators and character displays must have a minimum 90 degrees cone of visibility with its axis perpendicular to the panel on which the indicator is mounted. All indicators must be self-luminous. All indicators must have a rated life of 100,000 hours minimum. Each LED indicator must be white or clear when off. Indicators supplied on equipment requiring handles must be mounted such that a horizontal clearance is provided.

2. Character Displays. Liquid Crystal Displays (LCD) must be readable at temperatures of -20 degrees C to +70 degrees C.

P. Connectors. Connectors must be keyed to prevent improper insertion of the wrong connector where equipment damage or operator injury may result. The mating connectors must be designated as the connector number and male/female relationship, such as C1P (plug or PCB edge connector) and C1S (socket).

1. Type T. Type T connector must be a single row, 10 position, feed through terminal block. The terminal block must be a barrier type with 6-32, 0.25 in. or longer, nickel plated brass binder head screws. Each terminal must be permanently identified as to its function.

2. Plastic Circular and Type M. Pin and socket contacts for connectors must be beryllium copper construction subplated with 1.27 microns nickel and plated with 0.76 microns gold. Pin diameter must be 0.0618 in. All pin and socket connectors must use the AMP #601105-1 or #91002-1 contact insertion tool and the AMP #305183 contact extraction tool.

3. Card Edge and Two-Piece PCB.

a. Edge connectors must have bifurcated gold-plated contacts. The PCB receptacle connector must meet or exceed the following:

Operating Voltage:	600 VAC (RMS)
Current Rating:	5.0 Amperes
Insulation Material:	Diallyl Phthalate or Thermoplastic
Insulation Resistance:	5,000 Megohms
Contact Material:	Copper alloy plated with 0.00005 in. of nickel and 0.00010 in. of gold
Contact Resistance:	0.006 Ohm maximum

b. The two-piece PCB connector must meet or exceed DIN 41612.

(1) The PCB 22/44 Connector must have 22 independent contacts per side; dual sided with 0.156 in. contact centers.

4. Wire Terminal. Each wire terminal must be solderless with PVC insulation and a heavy duty short-locking spade type connector. All terminal connectors must be crimped using a Controlled-Cycle type crimping tool.

5. Flat Cable. Each flat cable connector must be designed for use with 26 AWG cable; have dual cantilevered phosphor bronze contacts plated with 0.00015 of gold over 0.00005 in. of nickel; and have a current rating of 1 Ampere minimum and an insulation resistance of 5 Megohms minimum.

6. PCB Header Post. Each PCB header post must be 0.025 in. square by 0.3425 in. high from the plane of the PCB to the end of the pin; be mounted on 0.10 in. centers; and be tempered hard brass plated with 0.00015 in. of gold over 0.00005 in. of nickel.

7. PCB Header Socket. Each PCB header socket block must be nylon or diallyl phthalate. Each PCB header socket contact must be removable, but crimp-connected to its conductor. The Manufacturer must list the part number of the extraction tool recommended by its manufacturer. Each PCB header socket contact must be brass or phosphor bronze plated with 0.00010 in. of gold over 0.00005 in. of nickel.

Q. Surge Protection Device. The surge suppression device must comply with ANSI/IEEE C62.41 (100 Kilohertz Ring Wave, the 1.2/50 microseconds – 8/20 Combination Wave and the EFT Burst) at voltages and currents specified at "Location Category B2" and at "Test Severity" level III (i.e. up to 4.0 Kilovolts, open-circuit).

2.03 MECHANICAL REQUIREMENTS

A. Assemblies. All assemblies must be modular, easily replaceable and incorporate plug-in capability for their associated devices or PCBs. Assemblies must be provided with two guides for each plug-in PCB or associated device (except relays). The guides must extend to within 0.75 in. from the face of either the socket or connector and front edge of the assembly. If Nylon guides are used, the guides must be securely attached to the file or assembly chassis.

B. Locking Devices. All screw type fasteners must utilize locking devices or locking compounds except for finger screws, which must be captive.

C. PCB Design and Connectors. No components, traces, brackets or obstructions must be within 0.125 in. of the board edge (guide edges). The manufacturer's name or logo, model number, serial number, and circuit issue or revision number must appear and be readily visible on all PCBs.

D. Model and Serial Numbers.

1. The manufacturer's model number and circuit issue or revision number must appear on the rear panel of all equipment supplied (where such panel exists). In addition to any assignment of model numbers by the manufacturer, the TYPE number must be displayed on the front panel in bold type, at least 0.25 in. high.

E. Workmanship. Workmanship must conform to the requirements of this specification and be in accordance with the highest industry standards.

F. Tolerances. The following mechanical tolerances must apply, except as specifically shown on the plans or in these specifications:

TYPE	DIMENSIONAL TOLERANCE
Sheet Metal	+/-0.0525 in.
PCB	+0 in., - 0.010 in.
Edge Guides	+/-0.015 in.

*Note: These dimensional tolerances do not apply to material gauge or thickness.

2.04 ENGINEERING

A. Human Engineering. The equipment must be engineered for simplicity, ease of operation and maintenance.

1. Knobs must be a minimum of 0.5 in. in diameter and a minimum separation of 0.5 in. edge to edge.

2. PCBs must slide smoothly in their guides while being inserted into or removed from the frame and fit snugly into the plug-in PCB connectors. PCBs must require a force no less than 5 pounds-force or greater than 50 pounds-force for insertion or removal.

B. Design Engineering. The design must be inherently temperature compensated to prevent abnormal operation. The circuit design must include such compensation as is necessary to overcome adverse effects due to temperature in the specified environmental range. The design must take into consideration the protection of personnel from all dangerous voltages.

C. Generated Noise. No item, component or subassembly must emit an audible noise level exceeding the peak level of 55 dBa when measured at a distance of one meter away from its surface, except as otherwise noted. No item, component or subassembly must emit a noise level sufficient to interfere with processing and communication functions of the controller circuits.

2.05 PRINTED CIRCUIT BOARDS

A. Design, Fabrication and Mounting.

1. All contacts on PCBs must be plated with a minimum thickness of 0.00003 in. gold over a minimum thickness of 0.000075 in. nickel.

2. PCB design must be such that when a component is removed and replaced, no damage is done to the board, other components, conductive traces or tracks.

3. Fabrication of PCBs must be in compliance with Military Specification MIL-P-13949, except as follows:

a. NEMA FR-4 glass cloth base epoxy resin copper clad laminates 0.0625 in. minimum thickness must be used. Inter-component wiring must be by laminated copper clad track having a minimum weight of 0.2 ounces per square foot with adequate cross section for current to be carried. All copper tracks must be plated or soldered to provide complete coverage of all exposed copper tracks. Jumper wires to external PCB components must be from plated-through padded holes and as short as possible.

b. All PCBs must conform to Section 3.3 of Military Specification MIL-P-13949G Grade of Pits and Dents, and be of Grade B quality (3.5.1.3) or better. The class of permissible bow or twist must be Class C (Table V) or better. The class of permissible warp or twist must be Class A (Table II) or better.

c. Sections 4.2 through 6.6 of Military Specification MIL-P-13949G (inclusive) must be omitted except as referenced in previous sections of this specification.

d. The mounting of parts and assemblies on the PCB must conform to Military Specification MIL-STD-275E, except as follows:

(1) Semiconductor devices that dissipate more than 250 milliwatts or cause a temperature rise of 10 degrees C, or more, be mounted with spacers, transipads or heat sinks to prevent contact with the PCB.

(2) When completed, all residual flux must be removed from the PCB.

(3) The resistance between any two isolated, independent conductor paths must be at least 100 Megohms when a 500 VDC potential is applied.

(4) All PCBs must be coated with a moisture resistant coating.

(5) Where less than 0.25 in. lateral separation is provided between the PCB (or the components of a PCB) and any metal surface, a 0.0625 in. (+/-0.0005 in.) Thick Mylar (polyester) plastic cover must be provided on the metal to protect the PCB.

e. Each PCB connector edge must be chamfered at 30 degrees from board side planes. The key slots must also be chamfered so that the connector keys are not extracted upon removal of board or jammed upon insertion. The key slots must be 0.045 in. (+/-0.005 in.) for 0.1 in. spacing and 0.055 in. (+/-0.005 in.) for 0.156 in. spacing.

B. Soldering.

1. Hand soldering must comply with Military Specification MIL-STD-2000.

2. Automatic flow soldering must be a constant speed conveyor system with the conveyor speed set at optimum to minimize solder peaks or points. The temperature must be controlled to within +/-8 degrees C of the optimum temperature. The soldering process must result in the complete coverage of all copper runs, joints and terminals with solder except that which is covered by an electroplating process. Wherever clinching is not used, a method of holding the components in the proper position for the flow process will be provided.

3. If exposure to the temperature bath is of such a time-temperature duration as to come within 80% of any component's maximum specified time-temperature exposure, that component must be hand soldered to the PCB after the flow process has been completed.

C. Definitions. Definitions for the purpose of this section on PCBs must be taken from MIL-P-55110D Section 3.3 and any current addendum.

D. Jumpers. Jumpers are not allowed unless called out in the specifications or approved by the CITY OF HOUSTON.

2.06QUALITY CONTROL

A. Components. All components must be lot sampled to assure a consistent high conformance standard to the design specification of the equipment.

B. Subassembly, Unit or Module. Complete electrical and environmental compliance testing must be performed on each module, unit, printed circuit or subassembly. Housing, chassis, and connection terminals must be inspected for mechanical sturdiness, and harnessing to sockets must be electrically tested for proper wiring sequence. The equipment must be visually and physically inspected to assure proper placement, mounting, and compatibility of subassemblies.

C. Pre-delivery Repair.

1. Any defects or deficiencies found by the inspection system involving mechanical structure or wiring must be returned through the manufacturing process or special repair process for correction.

2. PCB flow soldering is allowed a second time if copper runs and joints are not satisfactorily coated on the first run. Under no circumstances will a PCB be flow soldered more than twice.

3. Hand soldering is allowed for printed circuit repair.

2.07 ELECTRICAL, ENVIRONMENTAL AND TESTING REQUIREMENTS

The framework of this section, along with the specific test requirements contained herein, is excerpted with modifications from NEMA TS2-2003 - Section 2 by permission of NEMA. Excerpt © 2002 AASHTO / ITE / NEMA.

A. General. This section establishes the limits of the environmental and operational conditions in which the Cabinet Assembly will perform. This section defines the minimum test procedures that may be used to demonstrate conformance of a device type with the provisions of the standard. These test procedures do not verify equipment performance under every possible combination of environmental requirements covered by this standard. Nothing in this testing profile must be construed as to relieve the requirement that the equipment provided must fully comply with these standards/specifications under all environmental conditions stated herein.

The CITY OF HOUSTON may wish to extend the testing profile or introduce additional tests to verify compliance. (Authorized Engineering Information).

B. Inspection. A visual and physical inspection must include mechanical, dimensional and assembly conformance to all parts of this standard.

C. Testing Requirements.

1. A complete quality control / final test report must be supplied with each item. Quality control procedures must be submitted to the CITY OF HOUSTON prior to production. The test report must indicate the name of the tester and be signed by a responsible manager.

2. The quality control procedure and test report format must be supplied to the CITY OF HOUSTON for approval upon request. The quality control procedure must include the following, in the order shown:

a. Design Acceptance testing of all supplied components.

b. Physical and functional testing of all modules and items.

c. Environmental testing reports for all equipment.

d. Physical and functional testing of all items.

3. Separate certifications must be provided for Design and Production. Design Acceptance testing must be performed with a fully loaded and functional Cabinet Assembly. Production testing must be performed as part of the CITY OF HOUSTON's procurement delivery procedures and that testing should be performed at the Major Unit level. (Authorized Engineering Information).

4. Certain portions of the test procedures contained in this standard my cause damage to the unit (e.g. protection devices may be aged) and are not recommended for routine Production testing. (Authorized Engineering Information)

D. Definitions of Major Units of the Cabinet Assembly. For the purpose of this section, "Major units of the Cabinet Assembly" must include the Controller Unit, Application Software for implementing the desired functionality, Cabinet Monitor Unit (CMU), Auxiliary Monitor Unit (AMU), Serial Interface Units (SIUs), Power Distribution Unit (PDA), Switch Packs, Flasher(s), and Detector(s).

E. Environmental and Operating Requirements. The requirements (voltage, temperature, etc.) of this section must apply in any combination.

1. Voltage and Frequency.

a. Operating Voltage. The nominal voltage must be 120 VAC, unless otherwise noted.

b. Operating Frequency. The operating frequency range must be 60 hertz (+/-3.0 hertz), unless otherwise noted.

2. Transients, Power Service. The Test Unit must maintain all defined functions when the independent test pulse levels specified below occur on the alternating-current power service.

3. Nondestructive Transient Immunity Requirements.

a. The Test Unit (with protection in place and operational) must be capable of withstanding a high energy transient having the following characteristics repeatedly applied to the alternating current input terminals (AC power applied) without failure of the test specimen:

(1) Amplitude: 2000 Volts (+/-5 percent), both positive and negative polarity.

(2) Energy Source: Capacitor, oil filled, 15 microfarads (+/-10 percent), internal surge impedance less than 1 ohm.

(3) Repetition: Applied to the Test Unit once every 2 seconds for a maximum of three applications for each polarity.

(4) After the foregoing, the Test Unit must perform all defined functions upon the application of nominal alternating current power.

This test is considered to be a minimum test requirement for the Test Unit complying with ANSI/IEEE C62.41 (100 Kilohertz Ring Wave, the 1.2/50 microseconds – 8/20 Combination Wave and the EFT Burst) at voltages and currents specified at "Location Category B2" and at "Test Severity" level III (i.e. up to 4.0 Kilovolts, open-circuit). Regional conditions may warrant additional testing as described in ANSI/IEEE C62.41. (Authorized Engineering Information)

4. Transients, Input-Output Terminals.

a. The Test Unit (without protection in place or operational) must maintain all defined functions, when the test pulse occurs on selected input-output terminals.

(1) Amplitude: 300 Volts, both positive and negative polarity.

(2) Pulse Source: 1000 ohms nominal impedance.

(3) Repetition: 1 pulse per second, for a minimum of 5 pulses per selected terminal.

(4) Pulse rise time: 1 microsecond.

(5) Pulse width: 10 microseconds.

This test is considered to be a minimum test requirement for the Test Unit complying with ANSI/IEEE C62.41. Regional conditions may warrant additional testing as described in ANSI/IEEE C62.41. (Authorized Engineering Information)

5. Temperature and Humidity. The Test Unit must maintain all programmed functions when the temperature and humidity ambients are within the specified limits defined herein.

a. Ambient Temperature.

(1) The operating ambient temperature range must be from -37 degrees C to +74 degrees C. The storage temperature range must be from -45 degrees C to +85 degrees C.

(2) The rate of change in ambient temperature must not exceed 18 degrees C per hour, during which the relative humidity must not exceed 95 percent.

b. Humidity.

(1) The relative humidity must not exceed 95 percent non-condensing over the temperature range of -37 degrees C to +74 degrees C.

(2) Above +46 degrees C, constant absolute humidity must be maintained. This will result in the relative humidity shown in Exhibit 3-1 for dynamic testing.

Table 1
AMBIENT TEMPERATURE VERSUS RELATIVE HUMIDITY AT BAROMETRIC PRESSURES (29.92 In. Hg.) (NON-CONDENSING)

Ambient Temperature/ Dry Bulb (in degrees C)	Relative Humidity (in percent)	Ambient Temperature/ Wet Bulb (in degrees C)
-37.0 to 1.1	10	-17.2 to 42.7
1.1 to 46.0	95	42.7
48.8	70	42.7
54.4	50	42.7
60.0	38	42.7
65.4	28	42.7
71.2	21	42.7
74.0	18	42.7

F. Test Facilities. All instrumentation required in the test procedures, such as voltmeters, ammeters, thermocouples, pulse timers, etc. must be selected in accordance with good engineering practice. In all cases where time limit tests are required, the allowance for any instrumentation errors must be included in the limit test.

1. Variable Voltage Source: A variable source capable of supplying 20 amperes from 100 VAC to 135 VAC.

2. Environmental Chamber: An environmental chamber capable of attaining temperatures of -37 degrees C to +74 degrees C and relative humidity given in Table 1.

3. Transient Generators: Transient generators capable of supplying the transients outlined above.

G. Test Procedure: Transients, Temperature, Voltage, and Humidity

1. Test A: Placement in Environmental Chamber and Check-Out of Hook-Up

   a. Place the test unit in the environmental chamber. Connect the test unit AC input circuit to a variable voltage power transformer, voltmeter, and transient generator. The

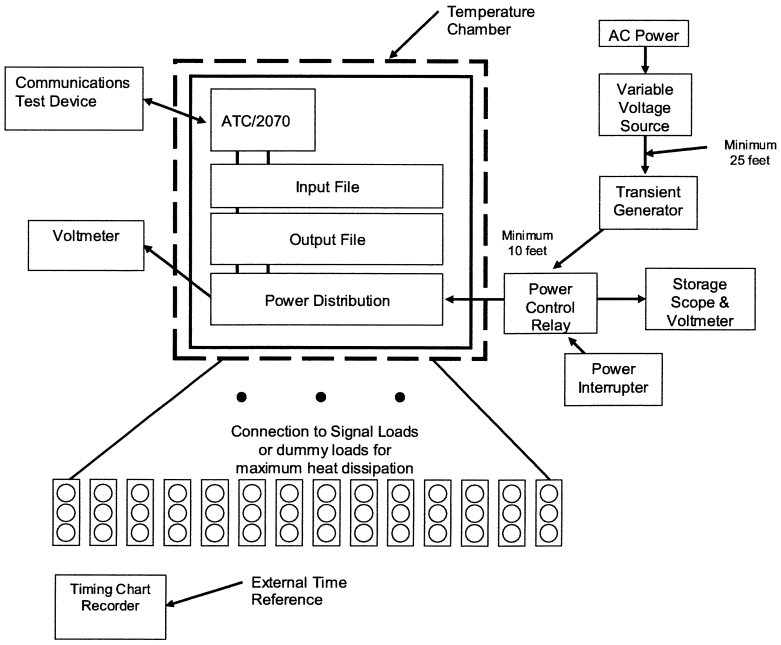

   transient generator must be connected to the AC input circuit at a point at least 25 feet from the AC power source and not over 10 feet from the input to the test unit.

   b. Connect test switches to the appropriate terminals to simulate the various features incorporated into the test unit. Place these switches in the proper position for desired operation.

   c. Verify the test hook-up. Adjust the variable-voltage power transformer to 120 VAC and apply power to the test unit. Verify that the test unit goes through its prescribed startup sequence and cycles properly in accordance with the operation determined by the positioning of test switches in item b.

   Upon the satisfactory completion and verification of the test hook-up, proceed with Test B.

2. Test B: Nondestructive Transient Immunity:

   a. Turn off the AC power input to the test unit from the variable-voltage power source.

   b. Apply the following high-energy transient to the AC voltage input terminals of the test unit (no other power connected to terminals):

      (1) Amplitude: 1000 V, both positive and negative polarity.

(2) Peak Power Discharge: Capacitor, oil-filled, 15 microfarads.

(3) Maximum Repetition Rate: Applied to the Cabinet Assembly once every 2 seconds for a maximum of three applications for each polarity.

c. Upon completion of the foregoing, apply 120 VAC to the test unit and verify that the test unit goes through its prescribed startup sequence and cycles properly in accordance with the programmed functions. The first operation of the over-current protective device during this test is not considered a failure of the test unit.

NOTE—Test C through G follow the profile indicated in Figure 2 to demonstrate the ability of the test

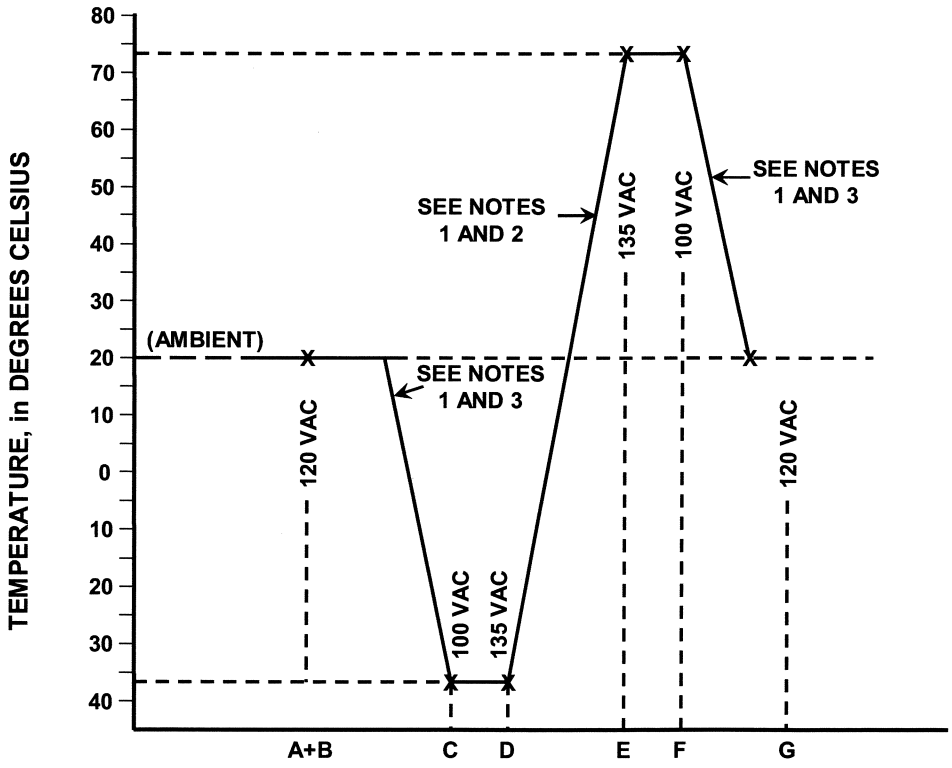

unit to function reliably under stated conditions of temperature, voltage, and humidity.

Figure 2
Test Profile

NOTES:

- The rate of change in temperature must not exceed 18 degrees C per hour
- Humidity controls must be set in conformance with the humidity given in Exhibit 3-1 during the temperature change between Test D and Test E.
- If a change in both voltage and temperature are required for the next test, the voltage must be selected prior to the temperature change.

3. Test C—Low-Temperature Low-Voltage Tests

   a. Definition of Test Conditions

      (1) Environmental Chamber Door: Closed.

      (2) Temperature: -37 degrees C.

      (3) Low Voltage: 100 VAC.

      (4) Humidity Control: Off.

   b. Test Procedure: While at room temperature, adjust the input voltage to 100 VAC and verify that the test unit is still operable.

      (1) With the test unit cycling through normal operations, lower the test chamber to -37 degrees C at a rate not exceeding 18 degrees C per hour. Allow the test unit to cycle for a minimum of 5 hours at -37 degrees C with the humidity controls in the off position. Then operate the test switches as necessary to determine that all functions are operable.

      (2) Remove power from the test unit for a minimum period of 5 hours. Upon restoration of power, the test unit must go through its prescribed startup sequence and then resume cycling.

      (3) With the test unit at -37 degrees C and the input voltage at 100 VAC, evaluate the following items against the respective standards:

         (a) Power Interruption Tests

      On satisfactory completion of this test, proceed with Test D.

4. Test D—Low-Temperature High-Voltage Tests

   a. Definition of Test Conditions

      (1) Environmental Chamber Door: closed.

      (2) Low Temperature: -37 degrees C.

      (3) High Voltage: 135 VAC.

(4) Humidity Controls: Off.

b. Test Procedure: While at -37 degrees C and with humidity controls off, adjust the input voltage to 135 VAC and allow the test unit to cycle for 1 hour. Then operate the test switches as necessary to determine that all functions are operable.

c. With the test unit at -37 degrees C and the input voltage at 135 VAC (humidity controls off), evaluate the following items against the respective standards:

(a) Power Interruption Tests

On satisfactory completion of this test, proceed to Test E.

5. Test E—High-Temperature High-Voltage Tests

a. Definition of Test Conditions

(1) Environmental Chamber Door: Closed.

(2) High Temperature: +74 degrees C.

(3) High Voltage: 135 VAC.

(4) Humidity Controls: In accordance with the humidity given in Table 1.

b. Test Procedure—With the test unit cycling, raise the test chamber to +74 degrees C at a rate not to exceed 18 degrees C per hour. Verify the input voltage is 135 VAC.

c. Set the humidity controls to not exceed 95 percent relative humidity over the temperature range of +1.1 degrees C to +46 degrees C. When the temperature reaches +46 degrees C, readjust the humidity control to maintain constant absolute humidity; +42.7 degrees C wet bulb that results in the relative humidity shown in Table 1. Verify that the test unit continues to cycle satisfactory during the period of temperature increase and at established levels of relative humidity.

(1) Allow the test unit to cycle for a minimum of 15 hours at +74 degrees C and 18 percent relative humidity. Then operate the test switches as necessary to determine that all functions are operable.

(2) With the test unit at +74 degrees C and 18 percent relative humidity and the input voltage at 135 VAC, evaluate the following items against the respective standards:

(a) Power Interruption Tests

On satisfactory completion of this test, proceed to Test F.

6. Test F—High-Temperature Low-Voltage Tests

a. Definition of Test Conditions

(1) Environmental Chamber Door: Closed.

(2) High Temperature: +74 degrees C.

(3) Low Voltage: 100 VAC.

(4) Humidity Controls: 18 percent relative humidity and +42.7 degrees C wet bulb.

b. Test Procedure: Adjust the input voltage to 100 VAC and proceed to operate the test switches to determine that all functions are operable. With the test unit at +74 degrees C and 18 percent relative humidity, +42.7 degrees C wet bulb, and the input voltage at 100 VAC, evaluate the following items against the respective standards:

(a) Power Interruption Tests

On satisfactory completion of this test, proceed to Test G.

7. Test G—Test Termination

a. Program the test unit to cycle.

b. Adjust the input voltage to 120 VAC.

c. Set the controls on the environmental chamber to return to room temperature, +20 degrees C (+/-5 degrees C), with the humidity controls in the off position. The rate of temperature change must not exceed 18 degrees C per hour.

d. Verify the test unit continues to cycle through normal operations properly.

e. Allow the test unit to stabilize at room temperature for 1 hour. Proceed to operate the test switches to determine that all functions are operable.

8. Test H—Appraisal of Equipment under Test

a. A failure is defined as any occurrence that results in other than normal operation of the equipment. (See item 2 for details.) If a failure occurs, the test unit must be repaired or components replaced, and the test during which failure occurred must be restarted from its beginning.

b. The test unit is considered to have failed if any of the following occur:

(1) If the test unit skips normal program intervals/steps or portions thereof when in normal operation, places false inputs, presents false outputs, exhibits disruption of normal sequence of operations, or produces changes in parameters beyond specified tolerances, or

(2) If the test unit fails to satisfy the requirements of Tests A to G, inclusive.

c. An analysis of the failure must be performed and corrective action taken before the test unit is retested in accordance with this standard. The analysis must outline what action was taken to preclude additional failures during the tests.

d. When the number of failures exceeds two, it must be considered that the test unit fails to meet these standards. The test unit may be completely retested after analysis of the failure and necessary repairs have been made in accordance with item c.

e. Upon completion of the tests, visually inspect the test unit. If material changes are observed which will adversely affect the life of the test unit, the cause and conditions must be corrected before making further tests.

H. Power Interruption Test Procedures. Conduct the following power interruption tests at low input voltage (100 VAC) and high input voltage (135 VAC) at -37 degrees C, and +74 degrees C.

1. Short Power Interruption. While the Test Unit is cycling through normal operations, remove the input voltage for a period not to exceed 475 milliseconds. Upon restoration of the input voltage, check to insure that the Test Unit continues normal operation as though no power interruption has occurred. Repeat this test three times.

2. Voltage Variation. All circuits of the Test Unit must be subjected to slowly varying line voltage during which the Test Unit must be subjected to line voltage that is slowly lowered from a nominal 120 VAC line voltage to 0 VAC at a rate of not greater than 2 Volts per second. The line voltage must then be slowly raised to 100 VAC at which point the Test Unit must resume normal operation without operator intervention. Perform this test at both -37 degrees C and +74 degrees C, at a nominal 120 VAC line voltage. Repeat this test three times.

3. Rapid Power Interruption. Subject the Test Unit to rapid power interruption testing of the form that the power is off for 350 milliseconds and on for 650 milliseconds for a period of 2 minutes. Perform power interruption through electromechanical contacts of an appropriate size for the load. During this testing, the controller must function normally and continue normal sequencing (operation) at the conclusion of the test. This test must be performed at both -37 degrees C and +74 degrees C, at a nominal 120 VAC line voltage. Repeat this test three times.

2.08 AUXILIARY CABINET UNITS

A. General Requirements.

1. Models 200 and 204 General.

a. The unit chassis must be made of metal suitable to meet rigid support and environmental requirements. Where electrical isolation is the only requirement, plastic insulation material may be used in lieu of metal.

b. The unit control circuitry and switches must be readily accessible by the use of a screwdriver or wrench. Only one type of screw head end (Slotted or Phillips) to be used.

c. The unit must be constructed so that no live voltage is exposed. A handle must be attached to the front panel for insertion or removal from the unit mating connector.

d. The unit must be so constructed that its lower surface must be no more than 2.06 in. below the centerline of the connector and no part extend more than 0.9 in. to the left or 1.1 in. to the right of the connector centerline.

e. Continuous edge guides must be provided on the unit.

f. Each switch must be capable of switching any current from 0.050 Amperes to 10.0 Amperes (AC) load with power factor of 0.85 or higher.

g. Unit indicators must be vertically centered on the front panel with indicators positioned no more than 1 in. from said center.

2. Model Plug Connectors. Model plug connectors must be:

a. Model 200 BEAU P 5412 - LAB or approved equal.

b. Model 204 BEAU P 5406 - LAB or approved equal.

B. Model 200 Switch Pack Unit.

1. General.

a. The Model 200 Switch Pack Unit must be a modular plug-in device containing three solid-state switches. Each switch must open or close a connection between applied power and external load.

b. A Ground True Controller Unit Input (0 VDC to 6 VDC) must cause the switch to conduct (ON) and a Ground False (16 VDC or more) must cause it to not conduct (OFF), State transition must occur between 6 VDC and 16 VDC. The input must not sink more than 20 milliamperes or be subjected to more than 30 VDC. The input must have reverse polarity protection.

c. With all switches ON, the unit must not draw more than 60 milliamperes at +16 VDC or more from the +24 VDC cabinet power supply.

d. Each switch must have an OFF state dv/dt rating of 100 Volts per microsecond or better. Each switch must provide isolation between inputs and outputs of at least 2000 Vdc and at least 100 megaohms resistive.

e. The unit front panel must have an indicator on the input to each switch. The indicator must be labeled or color-coded “Red”-top switch, “Yellow”-middle switch, and

"Green"-bottom switch. The middle switch indicator must be vertically centered on the unit front panel with the other indicators positioned 1 in. above and below.

f. The resistance between the AC+ input terminal and the AC+ output terminal of each switch must be a minimum of 15K Ohms when the switch is in open (OFF) state. When the switch is in the OFF state, the output current through the load must not exceed 10 milliamperes peak.

C. Model 204 Flasher Unit and Model 205 Flash Transfer Relay Unit.

1. Model 204 Flasher Unit.

a. The FLASHER UNIT must be a modular plug-in device containing a flasher control circuit and two solid-state switches. The unit's function is to alternatively open and close connections between applied power and external load.

b. The unit must generate its own internal DC power from the AC Line.

c. The unit must commence flashing operation when AC power is applied providing 50 to 60 flashes per minute per switch with a 50 % duty cycle.

d. Each switch must have an OFF state dv/dt rating of 200 V/microsecond or better. The resistance between the AC+ input terminal and the AC+ output terminal of each switch must be a minimum of 15K Ohms when the switch is in open (OFF) state. When the switch is in OFF state the output current must not exceed 10 milliamperes peak.

e. An indicator showing each switch output state must be provided. The two indicators must be centered with 1 in. minimum spacing.

f. Each circuit must be designed to operate in an open-circuit condition without load for 10 years minimum.

g. A surge arrestor must be provided between AC (pin 11) and Flasher Output (pins 7 & 8). The arrestor must meet the following requirements:
Recurrent Peak Voltage 212 Volts
Maximum Energy Rating 50 Joules
Average Power Dissipation 0.85 Watts
Peak I for pulses less than 6 microseconds 2000 Amperes
Standby I less than 1 Ma

2. Model 205 Flash Transfer Relay Unit. Each switch must be designed for a minimum of 100,000 (reference is a 10-year lifespan) operations while switching a tungsten load of 1000 Watts at 70 degrees C. Switch isolation between DC input and AC output circuit must be at least 10,000 Megohms at 2000 VDC.

a. The Flash Transfer Relay Unit must be of electromechanical type, designed for continuous duty.

b. Each unit must be enclosed in a removable, clear plastic cover. The manufacturer's name, electrical rating, and part number must be placed on the cover. They must be durable, permanent and readily visible.

c. Each unit must be provided with DPDT contacts. The contact points must be of fine silver, silver alloy or a superior alternate material. Contact points and arms must be capable of switching 20 Amperes or 1 Kilowatt Tungsten Load at 120 VAC per contact at least 100,000 operations without contact welding or excessive burning, pitting or cavitation. The points and arms must be able to withstand 10 Gs, 10 –55 Hertz without contact chatter.

d. The relay coil must have a power consumption of 10 Volt - Ampere maximum.

e. Each relay must withstand a potential of 1500 VAC at 60 Hertz between insulated parts and between current carrying or non-carrying parts. Each relay must have a one cycle surge rating of 175 Amperes RMS and pickup and drop out within 20 milliseconds.

D. Model 212 ITS Cabinet Monitor Unit (CMU).

1. General. The CMU is the principle part of the ITS Cabinet Monitoring System. It is resident in the Power Distribution Assembly. The role of the CMU is to query various cabinet conditions and, if the application requires action, the CMU will transfer control from the ATC Controller Unit to a safe control mode, examples include Signalized Intersection, Ramp Metering or other applications. Some applications may not require any action, only data gathering and report back to the ATC Controller Unit.

   The CMU is composed of a microprocessor, memory devices including non-volatile memory, communications circuitry to interface with Serial Buses #1 and #3, front panel indicators, front panel communication connector and a serial memory key device. The Operating Program must be resident in the Non-volatile memory. The serial memory key Memory must possess the conditions and function selections of the Unit.

2. Traffic Control Application. The Model 212 is intended for traffic control applications.

3. Failed State Action (FSA). Only Unit Reset must reset the CMU from a LATCHED FAILED STATE ACTION (LFSA). Only a Unit Reset or a CMU Power Fail must reset a LATCHED RESETTABLE FAILED STATE ACTION (LFSA-R).

   A NONLATCHED FAILED STATE ACTION (NFSA) must be reset if the fault conditions causing the NFSA have been removed. An NFSA must last for the programmed Minimum Flash time at a minimum.

   Only one LFSA, LFSA-R or NFSA fault state must be set at any time.

4. Unit Reset. The CMU must be reset from a FSA as a result of the front panel reset button or the EXTERNAL TEST RESET input. This reset command must be a one-time event,

such that a continuous reset command does not prevent the CMU from operating. The EXTERNAL TEST RESET input must be isolated from the AC+ Raw circuitry.

The EXTERNAL TEST RESET input must be True when the voltage is less than 8 VDC. The EXTERNAL TEST RESET input must be False when the voltage is greater than 16 VDC. A minimum True pulse width on the EXTERNAL TEST RESET input of 100 milliseconds is required for a Unit Reset.

5. Exit From Failed State Action. Prior to the CMU transferring the Output Relay contacts from the Fault state to the No Fault state, a transition period of 500 milliseconds must occur. During the transition period the Output Relay contacts must be in the Fault state and the CMU must set the Start-Up Flash Call bit in the Type 189 Frame to 1. At all other times the Start-Up Flash Call bit of the Type 189 Frame must be set to 0.

6. Monitor Functions.

   a. Cabinet Power Supply. The CMU must sense the Cabinet +24 VDC and +12 VDC power supply sources to +/-5% accuracy. The CMU must also sense the Cabinet +24 VDC state in each Output Assembly as reported by each AMU. Voltages equal to or greater than +22 VDC and +11 VDC respectively must NOT cause a LFSA. Voltages at or less than +18 VDC and +9 VDC for 500 milliseconds or longer must cause a LFSA. If the sensed voltage is less than +22 VDC or +11 VDC for 200 milliseconds or less, the CMU must NOT cause a LFSA. All other timing or voltage conditions may or may not cause LFSA. A +24 VDC failure or +12 VDC failure during the programmed Minimum Flash time or during a CMU Power Failure must not cause a LFSA. The CMU must report the value of the +24 VDC and +12 VDC power supply sources in the Type 189 response frame.

      There must be programming in the serial memory key to disable +12 VDC power supply monitoring.

   b. Conflicting Channels. For purpose of conflict determination, an active signal on either of the Green/Walk or Yellow inputs associated with any of the thirty-two channels must be considered as that channel being active. The serial memory key must contain the permissive channel pair programming. When any conflicting channels are detected as concurrently active for less than 200 milliseconds the CMU must not cause a LFSA. When any conflicting channels are detected as concurrently active for 500 milliseconds or more, the CMU must cause a LFSA. When any conflicting channels are detected as concurrently active for more than 200 milliseconds but less than 500 milliseconds, the CMU may or may not cause a LFSA. The time interval between the beginning of the concurrently conflicting channels and the transfer to the LFSA must not exceed 500 milliseconds.

   c. Serial Bus Error. The CMU communicates with both Serial Bus (SB) #1 and #3. In SB #1 the CMU is a Secondary, polled by the ATC Controller Unit Primary. On SB #1, the CMU must respond to the Serial Bus #1 Address defined by the ADDRESS 0

and ADDRESS 1 pins. In SB #3 the CMU is the Primary, polling each AMU Secondary.

(1) Serial Bus #1 Error. The CMU must cause a FSA when a Type 61 or Type 67 Frame has not been received from the ATC Controller Unit for greater than 1000 milliseconds. The first and second failures in a 24-hour period must be a NFSA. The third failure in a 24-hour period must be a LFSA-R. If a CMU Power Fail resets the LFSA-R, the SB #1 timeout count must be reset to 2 such that the next SB #1 timeout results in a LFSA-R.

A SB #1 timeout failure during the programmed Minimum Flash time or during a CMU Power Failure must not cause a FSA. The SB #1 Timeout function must be disabled if the SB #1 DISABLE input is at a True (Low) state.

The SB #1 DISABLE input must be True when the voltage is less than 8 VDC. The SB #1 DISABLE input must be False when the voltage is greater than 16 VDC. The SB #1 DISABLE input must be isolated from the AC+ Raw circuitry.

(2) Serial Bus #3 Error. The CMU must cause a FSA when a Type 129 or Type 130 Frame has not been received from each AMU for greater than 300 milliseconds. The first and second failures in a 24-hour period must be a NFSA. The third failure in a 24-hour period must be a LFSA-R. If a CMU Power Fail resets the LFSA-R, the SB #3 timeout count must be reset to 2 such that the next SB #3 timeout results in a LFSA-R. A SB #3 timeout failure during the programmed Minimum Flash time or during a CMU Power Failure must not cause a FSA.

d. Type 62 – Send to Local Flash Command Message. If the "N" bit is set in a Type 62 – Send to Local Flash Command message, the CMU must react by causing a NFSA. The NFSA must remain until the receipt of a Type 62 – Send to Local Flash Command message with the "N" bit cleared or until the CMU is reset by a Unit Reset or CMU Power Fail. The NFSA must last for the programmed Minimum Flash time at a minimum. If the "L" bit is set in a Type 62 – Send to Local Flash Command message, the CMU must react by causing a LFSA.

e. Diagnostics.

(1) Diagnostics Error. The CMU must be provided with a resident series of self-check diagnostic capabilities. The CMU must contain provisions to verify all memory elements on power-up. When a fault is detected, the LFSA-R must be set and the DIAGNOSTIC indicator illuminated.

(2) RAM Diagnostic. This test must verify that all RAM elements are operating correctly at power-up or following a Unit Reset. Patterns must be written to RAM. Each write must be followed by a read to verify that it contains the written pattern.

(3) Nonvolatile Diagnostic. This test must verify that the nonvolatile ROM(s) contain the proper program. The routine must perform a check on each ROM and make a

comparison with a preprogrammed check value. This test must be performed at power-up and at a minimum rate of 1024 bits per second during operation.

(4) Serial Memory Key Memory Diagnostic. This test must verify whether the non-volatile serial memory key contains valid data and that the data has not changed since the last write. The routine must perform a check on each nonvolatile memory element at power-up and whenever read and make a comparison with a preprogrammed check value. The serial memory key not present must cause a LFSA if the DOOR SWITCH FRONT input is sensed as not active (door closed).

(5) Internal MPU Monitor. The CMU must monitor the operation of its microprocessor with an independent circuit. At a minimum, the monitoring circuit must receive logic state transitions at least once every 50 milliseconds from the microprocessor. When the logic state transition is not received for 500 milliseconds the monitor circuit must force a LFSA-R and illuminate the DIAGNOSTIC indicator.

f. Multiple Input. The CMU must be capable of monitoring for the presence of an active signal on two or more inputs of a channel. When the presence of an active signal on two or more inputs of a channel is detected for less than 200 milliseconds, the CMU must not cause a LFSA. When the presence of an active signal on two or more inputs to a channel is detected for 450 milliseconds or more, the CMU must cause a LFSA. When the presence of an active signal on two or more inputs to a channel is detected for more than 200 milliseconds but less than 450 milliseconds, the CMU may or may not cause a LFSA. Multiple Input monitoring must be disabled when the MAIN CONTACTOR COIL STATUS input is not active. There must be programming in the serial memory key to disable Multiple Indication monitoring on a color combination basis (G+Y, Y+R, G+R).

g. Lack of Signal Inputs. The unit must detect the absence of any required signal voltage OR signal current (CSU) on the inputs of a channel. For voltage purposes a required signal on the Green or Yellow or Red inputs associated with a channel must be considered as that channel being active. When an absence of an active channel is detected for less than 700 milliseconds, the CMU must not cause a LFSA. When an absence of an active channel is detected for 1000 milliseconds or more, the CMU must cause a LFSA. When an absence of an active channel is detected for more than 700 milliseconds but less than 1000 milliseconds, the CMU may or may not cause a LFSA. Lack of Signal Input monitoring must be disabled for all channels when the MAIN CONTACTOR COIL STATUS input is not active. There must be programming in the serial memory key to disable Lack of Signal Input monitoring on a per channel basis.

Lack of Signal Input monitoring must also be disabled for any channel which has the DARK CHANNEL MAP bit set to "1" in the serial memory key programming for the DARK CHANNEL MAP addressed by the DARK CHANNEL MAP SELECT bits in a Type 61 message. The CSU monitor function is hardwired to twenty-eight physical channels, thus Virtual Channels do not have CSU monitoring capability. The CSU

monitor function must be disabled for any physical channel that has an input remapped to a Virtual Channel.

h. Yellow Clearance. The CMU must verify that the Yellow Change interval is at least 2.7 seconds (+/-0.1 seconds). When the minimum Yellow Change interval is not satisfied, the CMU must cause a LFSA. The CMU must report a Skipped Yellow Clearance when the Yellow Change interval is less than 100 milliseconds. The CMU must report a Short Yellow Clearance when the Yellow Change interval is less than 2.7 seconds (+/-0.1 seconds) and greater than 100 milliseconds.

   Minimum Yellow Change interval monitoring must be disabled when the MAIN CONTACTOR COIL STATUS input is not active. There must be programming in the serial memory key to disable Minimum Yellow Change interval monitoring on a per channel basis.

i. Yellow Plus Red Clearance. The CMU must verify that the Yellow Change plus Red Clearance interval between the end of an active GREEN signal and the beginning of the next conflicting GREEN signal is at least 2.7 (+/-0.1 seconds). When the minimum Yellow Change plus Red Clearance interval is not satisfied, the CMU must cause a LFSA. Minimum Yellow Change plus Red Clearance monitoring must be disabled when the MAIN CONTACTOR COIL STATUS input is not active. There must be programming in the serial memory key to disable Minimum Yellow Change plus Red Clearance interval monitoring on a per channel basis.

j. Local Flash Status. The CMU must monitor the LF STATUS input. When this signal is sensed as not active for greater than 500 milliseconds, the CMU must cause a NFSA. When this signal is sensed as not active for less than 200 milliseconds, the CMU must not cause a NFSA.

   (1) Local Flash Status Recovery. Recovery from Local Flash Status NFSA must occur when this signal is sensed as active for greater than 500 milliseconds. When this signal is sensed as active for less than 200 milliseconds, the CMU must not cause recovery from Local Flash Status NFSA.

k. Circuit Breaker Trip Status. The CMU must monitor the CB TRIP STATUS input. When this signal is sensed as not active for greater than 500 milliseconds, the CMU must cause a LFSA. When this signal is sensed as not active for less than 200 milliseconds, the CMU must not cause a LFSA.

l. Flasher Unit Output Failed. The CMU must monitor the FLASHER 1-1, FLASHER 1-2, FLASHER 2-1, and FLASHER 2-2 voltage states reported by each AMU. These inputs must be considered active when the input voltage exceeds 89 Volts RMS. These inputs must not be considered active when the input voltage is less than 70 Volts RMS. Signals between 89 Volts RMS and 70 Volts RMS may or may not be considered active. When a transition from the inactive state to the active state or a transition from the active state to the inactive state is absent for greater than 2500 milliseconds, the CMU must set a status bit in the Type 189 frame. This alarm

condition must not cause a FSA. It should cause the appropriate response in the ATC Controller Unit. This status is non-latching, such that once a status bit has been set, the sensing of five valid transitions of the input must clear the status bit.

m. CMU Power Failure. The CMU must monitor the AC+ Raw input and the NRESET and POWERDOWN cabinet control inputs to determine a CMU Power Failure response. The POWERDOWN signal in the low state indicates loss of AC+ Raw in the Controller Unit. A CMU Power Failure must be recognized when both the POWERDOWN and NRESET signals are active low for greater than 100 milliseconds or the AC+ Raw voltage is less than 82 Volts RMS (+/-2 Volts RMS).

n. AC+ Raw Level Sense. The CMU must monitor the AC+ Raw input and AC+ Raw inputs reported by each AMU. When any AC+ Raw voltage is less than 82 Volts RMS (+/-2 Volts RMS) for greater than 650 milliseconds (+/-100 milliseconds) the CMU must cause a NFSA. Once NFSA has been set, the POWERDOWN and NRESET signals must not be monitored until all AC+ Raw voltages have exceeded 87 Volts RMS (+/-2 Volts RMS).

o. Power Interrupt. The CMU must disable monitoring of the +12VDC and +24VDC power supply inputs when either the POWERDOWN or NRESET input is low. When the POWERDOWN and NRESET signals are both low the CMU must cause a NFSA.

p. Power Recovery. When the POWERDOWN input is high and the NRESET signal goes from low to high the CMU must begin timing the programmed Minimum Flash Interval. During the Minimum Flash Interval the CMU must be in NFSA.

q. Power Up. Following initial application of AC+ Raw voltage the CMU must maintain a NFSA until the POWERDOWN input is high and the NRESET signal goes from low to high. The CMU must then begin timing the programmed Minimum Flash Interval. During the Minimum Flash Interval the CMU must be in NFSA.

r. Minimum Flash Interval. The CMU must be in NFSA during the Minimum Flash Interval. The Minimum Flash Interval must be programmed in the serial memory key between the limits of 6 seconds to 16 seconds with an incremental adjustment of 1 second. The CMU must not set a FSA during the Minimum Flash Interval.

7. Field Output Check.

a. Field Check Mode. The CMU must compare the active states of the field signals with the states reported by the ATC Controller Unit in the Type 61 frame. When a mismatch is detected for less than 700 milliseconds the CMU must not cause a LFSA. When a mismatch is detected for 1000 milliseconds or more, the CMU must cause a LFSA. When a mismatch is detected for more than 700 milliseconds but less than 1000 milliseconds, the CMU may or may not cause a LFSA. Field Output Check monitoring must be disabled when the MAIN CONTACTOR COIL STATUS input is not active. There must be a programming in the serial memory key to disable Field Output Check monitoring on a field input basis.

b. Field Check Status. The CMU must compare the active states of the field signals with the states reported by the ATC Controller Unit in the Type 61 frame. When a mismatch is detected while a Conflict, Lack of Signal, or Multiple fault is timing, Field Check Status must be reported with the fault to indicate the faulty channel(s) and color(s). Field Output Check monitoring must be disabled when the MAIN CONTACTOR COIL STATUS input is not active. There must be a programming in the serial memory key to disable Field Output Check monitoring on a field input basis.

8. CMU Temperature. The CMU must measure the temperature at the CMU and report this value in the Type 182 frame. Temperature accuracy must be +/-6 degrees C over the operating temperature range of the CMU.

9. Input Signals.

a. Field Signal Inputs. A Green or Yellow signal input must be sensed active when it exceeds 25 Volts RMS and must not be sensed active when it is less than 15 Volts RMS. A Green or Yellow signal between 15 Volts RMS and 25 Volts RMS may or may not be sensed active. There must be a programming in the serial memory key to disable the Yellow input for each physical channel. A Red signal input must be sensed active when it exceeds 70 Volts RMS and must not be sensed active when it is less than 50 Volts RMS. A Red signal between 50 Volts RMS and 70 Volts RMS may or may not be sensed active.

b. Switch Pack Current. A channel must be sensed active when the load current exceeds 105% of the Channel Current Sense Threshold programmed for that channel in the serial memory key. A channel must not be sensed active when the load current is less than 95% of the Channel Current Sense Threshold programmed for that channel in the serial memory key. A load current value between 95% and 105% of the Channel Current Sense Threshold may or may not be sensed active.

c. PDA Control Signal Inputs.

(1) Local Flash Status. This input must be internally connected to the CMU Output Relay COM pin. This input must be considered active when the input voltage exceeds 89 Volts RMS. This input must not be considered active when the input voltage is less than 70 Volts RMS. Signals between 89 Volts RMS and 70 Volts RMS may or may not be considered active. Operation of the cabinet in AUTO mode must place AC+ on this input. Operation of the cabinet in FLASH mode must be open circuit on this input. The CMU must report the state of this input in the Type 189 frame.

(2) Main Contactor Coil Status. The MAIN CONTACTOR COIL STATUS input must be connected to the AC+ Raw side of the main contactor signal bus relay coil. An active signal on this input indicates the Signal Bus should be powering the Switch Packs. This input must be considered active when the input voltage exceeds 89 Volts RMS. This input must not be considered active when the input voltage is less than 70 Volts RMS. Signals between 89 Volts RMS and 70 Volts

RMS may or may not be considered active. The CMU must report the state of this input in the Type 189 frame.

(3) Main Contactor Secondary Status. The MAIN CONTACTOR SECONDARY STATUS input must be connected to the output side of the main contactor signal bus relay. This input must be considered active when the input voltage exceeds 89 Volts RMS. This input must not be considered active when the input voltage is less than 70 Volts RMS. Signals between 89 Volts RMS and 70 Volts RMS may or may not be considered active. The CMU must report the state of this input in the Type 189 frame.

(4) FTR Coil Drive Status. The FTR COIL DRIVE STATUS input must be connected to the FTR COIL DRIVE signal in the AC SIGNAL POWER BUS. This input must be considered active when the input voltage exceeds 89 Volts RMS. This input must not be considered active when the input voltage is less than 70 Volts RMS. Signals between 89 Volts RMS and 70 Volts RMS may or may not be considered active. The CMU must report the state of this input in the Type 189 frame.

(5) Circuit Breaker (CB) Trip Status. The CB TRIP STATUS input must be connected to the Auxiliary Switch output of the circuit breaker unit. This input must be considered active when the input voltage exceeds 89 Volts RMS. This input must not be considered active when the input voltage is less than 70 Volts RMS. Signals between 89 Volts RMS and 70 Volts RMS may or may not be considered active. The CMU must report the state of this input in the Type 189 frame.

(6) Front/Rear Door Switch. The CMU must monitor the DOOR SWITCH FRONT and DOOR SWITCH REAR inputs. These inputs must be considered active (door open) when the input voltage exceeds 89 Volts RMS. These inputs must not be considered active (door closed) when the input voltage is less than 70 Volts RMS. Signals between 89 Volts RMS and 70 Volts RMS may or may not be considered active. The CMU must report the state of these inputs in the Type 189 frame.

(7) Monitor Interlock. The MONITOR INTERLOCK input must be connected to VDC GROUND within the CMU.

(8) CMU Address Inputs. The Address Select input pins ADDRESS 0 and ADDRESS 1 define the Serial Bus #1 address of the CMU. The pins are left open for a logical False, and are connected to VDC GROUND for a logical True.

ADDRESS 1	ADDRESS 0	SB #1 Address
False	False	0x0F
False	True	0x10
True	False	0x11
True	True	0x12

10. Power and Circuit Requirements.

    a. AC+ Raw. The CMU must be operational over the voltage range of 80 Volts RMS to 135 Volts RMS. It must be capable of insertion and removal while AC power is applied to the cabinet. Surge current on AC+ Raw must be less than 2 Amperes peak.

    (1) +24VDC Power Supply. The CMU must not use the Cabinet +24VDC Power Supply to run any of its internal circuitry. The +24 VDC MONITOR and +12 VDC MONITOR input circuits must be optically isolated from the AC+ Raw circuitry. The maximum current into the +24 VDC or +12 VDC Monitor inputs over the voltage range of 0 VDC to 30 VDC must be less than 20 milliamperes.

    (2) Failed State Output Circuit. The Output relay of the CMU must have one set of isolated Form C contacts. These relay contacts must be rated for a minimum of 3 Amperes at 120 Volts RMS and 100,000 operations. Contact opening/closing time must be 30 milliseconds or less. The relay coil must be energized in the No Fault state and de-energized in the FSA state.

11. Front Panel Devices.

    a. Indicators. All indicators must be clear LEDs. Clear LEDs must not depend on a reflector or diffusion as part of its design. Clear LEDs must only show the die and not appear to be ON when exposed to ambient light. The following indicators must be provided (Top to Bottom).

    b. Power. A green POWER indicator must illuminate to indicate AC+ Raw voltage is proper. It must flash at a 2 Hertz rate when the NRESET or POWERDOWN input is True. It must remain off when the voltage is less than 80 Volts RMS (+/-2 Volts RMS).

    c. 24 VDC Fail. A red 24VDC FAIL indicator must illuminate when the CMU is in FSA as a result of a 24VDC cabinet power supply fault.

    d. 12 VDC Fail. A red 12VDC FAIL indicator must illuminate when the CMU is in FSA as a result of a 12VDC cabinet power supply fault. The 12VDC FAIL indicator must flash at a 2 Hertz rate when the 12 VDC monitor function is disabled.

    e. Conflict. A red CONFLICT indicator must illuminate when the CMU is in FSA as a result of a Conflicting Channels fault.

f. Lack of Signal. A red LACK OF SIGNAL indicator must illuminate when the CMU is in FSA as a result of a Lack of Signal Inputs fault.

g. Multiple. A red MULTIPLE indicator must illuminate when the CMU is in FSA as a result of a Multiple Inputs fault.

h. ATC/Local Flash. A red ATC/LOCAL FLASH indicator must illuminate when the CMU is in FSA as a result of a Type 62 – Send to Local Flash Command from the ATC Controller Unit, the LOCAL FLASH STATUS input sensed inactive, or CB TRIP STATUS active.

i. Clearance. A red CLEARANCE indicator must illuminate when the CMU is in FSA as a result of a Yellow Clearance or Yellow Plus Red Clearance fault.

j. Field Check. A red FIELD CHECK indicator must illuminate when the CMU is in FSA as a result of a Field Output Check fault. The indicator must flash at a 2 Hertz rate when the CMU is in FSA with Field Check Status as a result of Conflict, Lack of Signal, or Multiple fault.

k. SB #1 Error. A red SB #1 ERROR indicator must illuminate when the CMU is in FSA as a result of a Serial Bus #1 fault.

l. SB #3 Error. A red SB #3 ERROR indicator must illuminate when the CMU is in FSA as a result of a Serial Bus #3 fault.

m. Diagnostic. A red DIAGNOSTIC indicator must illuminate when the CMU is in FSA as a result of a Diagnostic fault. The DIAGNOSTIC indicator must flash at a 4 Hertz rate if the serial memory key is not present and a FSA state does not exist.

n. SB #1 Rx. A yellow indicator must illuminate for 40 milliseconds (+/-5 milliseconds) each time the CMU correctly receives a frame on Serial Bus #1.

o. SB #3 Rx. A yellow indicator must illuminate for 40 milliseconds (+/-5 milliseconds) each time the CMU correctly receives a frame on Serial Bus #3.

12. Serial Bus #3 Terminations. The Serial Bus #3 RxD+ input must be terminated on the CMU to the Serial Bus #3 EIA-485 supply voltage through a 560 Ohm resistor. The Serial Bus #3 RxD- input must be terminated on the CMU to AC Raw- through a 560 Ohm resistor. A 120 Ohm resistor must be connected on the CMU between RxD+ and RxD-. The CMU Serial Bus #3 TxD drivers must remain in the mark state with drivers enabled when the CMU is not transmitting a command frame. Note: A 120 Ohm resistor must be connected between TxD+ and TxD- on the Serial Bus #3 cable assembly in the last Output Assembly installed in the Serial Bus #3 daisy chain.

13. Terminal Port. An EIA-232-E Data Terminal Equipment (DTE) interface and connector must be provided for interconnecting to a personal computer. Where differences occur between the EIA-232 standard and this document, this document must govern.

a. Physical. The connector must be mounted on the front panel and must be a 9-position subminiature D-type connector with metal shell. The connector must utilize female contacts with 15 millionths of an inch gold plating in the mating areas.

Pin #	Function	I/O
1	Reserved	-
2	RxD	I
3	TxD	O
4	Reserved	-
5	Signal Ground	-
6	Reserved	-
7	Reserved	-
8	Reserved	-
9	Reserved	-

b. Receive Data (RxD). The RxD input must contain the serial data input to the CMU.

c. Transmit Data (TxD). The TxD output must contain the serial data output from the CMU.

d. Signal Ground. All signals must be referenced to Signal Ground and must be optically isolated from the CMU.

e. Data Link Layer. Transmission must be in asynchronous start/stop mode. The format must be 8 bit data, 1 stop bit, even parity, and 9600 bits per second (+/-2%) at a minimum. The CMU must be capable of full duplex operation. Flow control must use XON/XOFF procedures.

14. Monitor Unit Serial Memory Key. The CMU must have a Datakey^{tm} model KC4210 Keycepticle^{tm} socket or equivalent serial memory key receptacle, which will intermate with the Datakey^{tm} model LCK4000-RED, mounted on the front panel. The CMU must be provided with a Datakey^{tm} model LCK4000-RED serial memory key or equivalent. The serial memory key must be rated for –40 to +80 degrees C operation. Note: Datakey^{tm} and Keycepticle^{tm} are registered trademarks of Datakey, Inc.

a. Monitor Unit Serial Memory Key Interface. The CMU must not provide the capability to program the serial memory key. Writing to the serial memory key may be accomplished through the use of a serial memory key writer. The serial memory key

must be used as a read only device. The 16 bit Frame Check Sequence (FCS) procedure defined in clause 4.6.2 of ISO/IEC 3309 must be used to verify the integrity of the read data. Failure to read the serial memory key correctly must result in LFSA. Interface circuitry to the device must utilize the LOFO switch on the serial memory key socket to ensure the device is removed and inserted with no power applied to the interface pins (i.e. dead socket).

b. Serial Memory Key Data. All bytes and bits marked as "reserved" must be set to "0".

Byte #	Contents	Description
1	0x01	Serial Memory Key Version
2	Ch 1-9, …, 1-2	Permissive Programming for channels 1-32: A bit set to "1" programs a channel pair to the permissive state. In the event the CMU has fewer than 32 channels, the bit positions corresponding to the nonexistent channels must be 0. Default programming must be 0. The Contents parameter contains on channel pair per bit position. For example, the contents of byte #5, "Ch 2-3, …, 1-26", is as follows: b0 = channel pair 1-26 b1 = channel pair 1-27 b2 = channel pair 1-28 b3 = channel pair 1-29 b4 = channel pair 1-30 b5 = channel pair 1-31 b6 = channel pair 1-32 b7 = channel pair 2-3 If b1 is set, then channel 1 is permissive with channel 27.
3	Ch 1-17, …, 1-10	
4	Ch 1-25, …, 1-18	
5	Ch 2-3, …, 1-26	
6	Ch 2-11, …, 2-4	
7	Ch 2-19, …, 2-12	
8	Ch 2-27, …, 2-20	
9	Ch 3-6, …, 2-28	
10	Ch 3-14, …, 3-7	
11	Ch 3-22, …, 3-15	
12	Ch 3-30, …, 3-23	
13	Ch 4-10, …, 3-31	
14	Ch 4-18, …, 4-11	
15	**Ch 4-26, …, 4-19**	
16	Ch 5-7, …, 4-27	
17	Ch 5-15, …, 5-8	
18	Ch 5-23, …, 5-16	
19	Ch 5-31, …, 5-24	
20	Ch 6-13, …, 5-32	
21	Ch 6-21, …, 6-14	
22	Ch 6-29, …, 6-22	
23	Ch 7-12, …, 6-30	
24	Ch 7-20, …, 7-13	
25	Ch 7-28, …, 7-21	
26	Ch 8-12, …, 7-29	
27	Ch 8-20, …, 8-13	
28	Ch 8-28, …, 8-21	
29	Ch 9-13, …, 8-29	
30	Ch 9-21, …, 9-14	
31	Ch 9-29, …, 9-22	
32	Ch 10-15, …, 9-30	
33	Ch 10-23, …, 10-16	

Byte #	Contents	Description
34	Ch 10-31, …, 10-24	
35	Ch 11-18, …, 10-32	
36	Ch 11-26, …, 11-19	
37	Ch 12-14, …, 11-27	
38	Ch 12-22, …, 12-15	
39	Ch 12-30, …, 12-23	
40	Ch 13-19, …, 12-31	
41	Ch 13-27, …, 13-20	
42	Ch 14-17, …, 13-28	
43	Ch 14-25, …, 14-18	
44	Ch 15-16, …, 14-26	
45	Ch 15-24, …, 15-17	
46	Ch 15-32, …, 15-25	
47	Ch 16-24, …, 16-17	
48	Ch 16-32, …, 16-25	
49	Ch 17-25, …, 17-18	
50	Ch 18-19, …, 17-26	
51	Ch 18-27, …, 18-20	
52	Ch 19-22, …, 18-28	
53	Ch 19-30, …, 19-23	
54	Ch 20-26, …, 19-31	
55	Ch 21-23, …, 20-27	
56	Ch 21-31, …, 21-24	
57	Ch 22-29, …, 21-32	
58	Ch 23-28, …, 22-30	
59	Ch 24-28, …, 23-29	
60	Ch 25-29, …, 24-29	
61	Ch 26-31, …, 25-30	
62	Ch 28-30, …, 26-32	
63	Ch 31-32, …, 28-31	
64	Ch 8:1	Lack of Signal Input Enable: A bit set to "1" enables the Lack of Signal Input monitoring function for that channel. This bit must be set to "0" for any channel that has an input mapped to a virtual channel. In the event the CMU has fewer than 32 channels, the bit positions corresponding to the nonexistent channels must be 0. Default programming must be 1.
65	Ch 16:9	
66	Ch 24:17	
67	Ch 32:18	
68	Ch 8:1	Dark Channel Map #1 A bit set to "1" disables the Lack of Signal Input monitoring function for that channel.
69	Ch 16:9	
70	Ch 24:17	

Byte #	Contents	Description
71	Ch 32:18	For channels that are set to 0, Lack of Signal Input Enable programming must determine Lack of Signal Input operation. Default programming must be 0.
72	Ch 8:1	Dark Channel Map #2 A bit set to "1" disables the Lack of Signal Input monitoring function for that channel. For channels that are set to 0, Lack of Signal Input Enable programming must determine Lack of Signal Input operation. Default programming must be 0.
73	Ch 16:9	
74	Ch 24:17	
75	Ch 32:18	
76	Ch 8:1	Dark Channel Map #3 A bit set to "1" disables the Lack of Signal Input monitoring function for that channel. For channels that are set to 0, Lack of Signal Input Enable programming must determine Lack of Signal Input operation. Default programming must be 0.
77	Ch 16:9	
78	Ch 24:17	
79	Ch 32:18	
80	Ch 8:1	Dark Channel Map #4 A bit set to "1" disables the Lack of Signal Input monitoring function for that channel. For channels that are set to 0, Lack of Signal Input Enable programming must determine Lack of Signal Input operation. Default programming must be 0.
81	Ch 16:9	
82	Ch 24:17	
83	Ch 32:18	
84	Ch 8:1	GY Multiple Channel Enable: A bit set to "1" enables the Green/Yellow Multiple Channel monitoring function for that channel. This bit must be set to "0" for any channel that has had a Green or Yellow input remapped to a virtual channel. In the event the CMU has fewer than 32 channels, the bit positions corresponding to the nonexistent channels must be 0. Default programming must be 1.
85	Ch 16:9	
86	Ch 24:17	
87	Ch 32:18	
88	Ch 8:1	YR Multiple Channel Enable: A bit set to "1" enables the Yellow/Red Multiple Channel monitoring function for
89	Ch 16:9	
90	Ch 24:17	

Byte #	Contents	Description
91	Ch 32:18	that channel. This bit must be set to "0" for any channel that has had a Yellow or Red input remapped to a virtual channel. In the event the CMU has fewer than 32 channels, the bit positions corresponding to the nonexistent channels must be 0. Default programming must be 1.
92	Ch 8:1	GR Multiple Channel Enable: A bit set to "1" enables the Green/Red Multiple Channel monitoring function for that channel. This bit must be set to "0" for any channel that has had a Green or Red input remapped to a virtual channel. In the event the CMU has fewer than 32 channels, the bit positions corresponding to the nonexistent channels must be 0. Default programming must be 1.
93	Ch 16:9	
94	Ch 24:17	
95	Ch 32:18	
96	Ch 8:1	Minimum Yellow Change Enable: A bit set to "1" enables the Minimum Yellow Change monitoring function for that channel. In the event the CMU has fewer than 32 channels, the bit positions corresponding to the nonexistent channels must be 0. Default programming must be 1.
97	Ch 16:9	
98	Ch 24:17	
99	Ch 32:18	
100	Ch 8:1	Minimum Yellow Change Plus Red Clearance Enable: A bit set to "1" enables the Minimum Yellow Change Plus Red monitoring function for that channel. In the event the CMU has fewer than 32 channels, the bit positions corresponding to the nonexistent channels must be 0. Default programming must be 1.
101	Ch 16:9	
102	Ch 24:17	
103	Ch 32:18	
104	Ch 8:1	Yellow Input Disable: A bit set to "1" forces the Yellow input to the OFF state for that channel. In the event the CMU has fewer than 28 physical channels, the bit positions corresponding to the nonexistent channels must be 0. Default programming must be 0.
105	Ch 16:9	
106	Ch 24:17	
107	Ch 28:25	
108	Ch 8:1	Current Sense Enable: A bit set to "1" enables the Lack of Indication current monitoring function for
109	Ch 16:9	
110	Ch 24:17	

Byte #	Contents	Description
111	Ch 28:25	that channel. This bit must be set to "0" for any channel that has an input mapped to a virtual channel. In the event the CMU has fewer than 28 physical channels, the bit positions corresponding to the nonexistent channels must be 0. Default programming must be 1.
112	Ch 4:1	Current Sense Full Scale Parameter These bits must define the Full Scale (FS) parameter for the Current Sense circuit for each channel. Default programming must be 00. b1,b0 = channel n b3,b2 = channel n+1 b5,b4 = channel n+2 b7,b6 = channel n+3 00 = 0.25 Amperes 01 = 0.33 Amperes 10 = 0.50 Amperes 11 = 1.0 Amperes
113	Ch 8:5	
114	Ch 12:9	
115	Ch 16:13	
116	Ch 20:17	
117	Ch 24:21	
118	Ch 28:25	
119	Channel 1	Channel Current Sense Threshold The threshold value for channel current sense must be programmed in percent (0 to 95) of full scale (FS). This value should be set in accordance with minimum accuracy tolerances defined in AMU section 3.8.5.1, AC RMS CURRENT SENSING. Default programming must be 25 (25% of 1.0 Amp full scale = 250 milliamperes).
120	Channel 2	
121	Channel 3	
122	Channel 4	
123	Channel 5	
124	Channel 6	
125	Channel 7	
126	Channel 8	
127	Channel 9	
128	Channel 10	
129	Channel 11	
130	Channel 12	
131	Channel 13	
132	Channel 14	
133	Channel 15	
134	Channel 16	
135	Channel 17	
136	Channel 18	
137	Channel 19	
138	Channel 20	
139	Channel 21	
140	Channel 22	

Byte #	Contents	Description
141	Channel 23	
142	Channel 24	
143	Channel 25	
144	Channel 26	
145	Channel 27	
146	Channel 28	
147	Red Ch 8:1	Field Output Check Enable: A bit set to "1" enables the Field Output Check monitoring function for that input. This bit must be set to "0" for any input that has been remapped to a virtual channel. In the event the CMU has fewer than 32 channels, the bit positions corresponding to the nonexistent inputs must be 0. Default programming must be 1.
148	Red Ch 16:9	
149	Red Ch 24:17	
150	Red Ch 32:25	
151	Yellow Ch 8:1	
152	Yellow Ch 16:9	
153	Yellow Ch 24:17	
154	Yellow Ch 32:25	
155	Green Ch 8:1	
156	Green Ch 16:9	
157	Green Ch 24:17	
158	Green Ch 32:25	
159	Minimum Flash Time	Minimum Flash Time Values of 0 thru 5 must result in 6 seconds of minimum flash. Maximum value is 15. Default programming must be 6.
160	+12 VDC Enable	+12 VDC Power Supply Monitor Enable Bit 0 set to 1 must enable the +12 VDC Power Supply monitor. Default programming must be 0x01.
161	Ch 29 Red	Virtual Channel Assignment Channels that have not been assigned must be set to 0. Default programming must be 0. Bits 4:0 specify the physical channel number (1 to 28) Bits 6:5 specify the physical input 01 = Red 10 = Yellow 11 = Green Bit 7 = reserved
162	Ch 29 Yellow	
163	Ch 29 Green	
164	Ch 30 Red	
165	Ch 30 Yellow	
166	Ch 30 Green	
167	Ch 31 Red	
168	Ch 31 Yellow	
169	Ch 31 Green	
170	Ch 32 Red	
171	Ch 32 Yellow	
172	Ch 32 Green	
173	AMU Position 1	AMU Configuration The number of Switch Pack positions in each output
174	AMU Position 2	
175	AMU Position 3	

Byte #	Contents	Description
176	AMU Position 4	Assembly position must be programmed in each byte. CMU channel numbers must be assigned sequentially starting with AMU position #1. Default programming must be 14,0,0,0. 0: Position not used 6: Six Pack Output Assembly 14: Fourteen Pack Output Assembly The 14 Pack is valid only for position #1 (#1=14, #2=0) and #3 (#3=14, #4=0). All other values are reserved.
177:216	ASCII string	Monitor ID A packed 40 character ID must be stored in ASCII format. Allowable characters are 020h through 07Eh. If less than 40 characters are used, the unused locations must be set to 00h. Default programming must be 00h.
217:256	ASCII string	User ID A packed 40 character ID must be stored in ASCII format. Allowable characters are 020h through 07Eh. If less than 40 characters are used, the unused locations must be set to 00h. Default programming must be 00h.
257:510	0x00	Reserved for future use.
511	FCS lsb	16 bit Check Value FCS Polynomial calculation of bytes #1 through #510.
512	FCS msb	

15. CMU Connector. The CMU Connector must be a DIN 4161264 Header Type. The CMU Connector pin assignments must be as shown on drawing 4-11-5.

16. Serial Bus #1 Frames.

    a. Type 60 Command – Module ID.

Byte #	Contents	Description
a.	60	Frame Type

b. Type 188 Response – Module ID.

Byte #	*Contents*	*Description*
1	188	Frame Type
2	CMU address	Serial Bus #1 Address

b. Type 61 Command – Switch Pack Drivers. The destination for this frame must be the CMU. The Channel numbers in the Description column below refer to the channel numbers of the CMU. The ATC Controller Unit must include a definition, via program entry, of the CMU Channel to ATC Controller Unit signal driver group utilization. The Dark Channel Map Select bits must select a preprogrammed mask in the CMU serial memory key that disables Lack of Signal Input monitoring for the selected channels.

Byte #	*Contents*	*Description*
1	61	Frame Type
2	Channel 8:1 Red	Switch Pack Status A bit set to 1 indicates the Switch Pack output is set ON.
3	Channel 16:9 Red	
4	Channel 24:17 Red	
5	Channel 28:25 Red	
6	Channel 8:1 Yellow	
7	Channel 16:9 Yellow	
8	Channel 24:17 Yellow	
9	Channel 28:25 Yellow	
10	Channel 8:1 Green	
11	Channel 16:9 Green	
12	Channel 24:17 Green	
13	Channel 28:25 Green	
14	Map Select	Dark Channel Map Select Bit 1 and bit 0 must select one of four Dark Channel Maps programmed in the serial memory key that disables Lack of Signal Input monitoring for a selected channel. Bits 2 thru 7 are reserved. 00 = Mask #1 01 = Mask #2 10 = Mask #3 11 = Mask #4

c. Type 61 Response – CMU Status. If the CMU is in FSA (byte #2, Fault Type not equal to 0), then all bytes of the information field of this frame except Control Status 1, Control Status 2, and Output Assembly Flasher Status must contain an exact image of the signals that were applied to the CMU at the point in time of the detection of the failure. Control Status 1, Control Status 2, and Output Assembly Flasher Status must always reflect current status. If a channel block is not used (AMU not present) the

Channel Fault Status bits, Channel Input Status bits, and Channel Input Voltage values bits for that block must be set to 0.

Byte #	*Contents*	*Description*
1	189	Frame Type
2	Fault Type	Enumerated fault code 00 = No Fault 01 = CMU/AMU +24 VDC 02 = CMU +12 VDC 03 = Conflict 04 = Serial Bus #1 05 = Serial Bus #3 06 = ATC LFSA Flash (Type 62) 07 = ATC NFSA Flash (Type 62) 08 = Diagnostic 09 = Multiple 10 = Lack of Signal Input 11 = Short Yellow Clearance 12 = Skipped Yellow Clearance 13 = Yellow + Red Clearance 14 = Field Output Check 15 = Serial Memory Key absent 16 = Serial Memory Key FCS error 17 = Serial Memory Key Data error 18 = Local Flash 19 = CB Trip 20 = CMU/AMU AC+ Raw Fail 21 = NRESET Active 22:127 = Reserved 128:255 = Spare
3	Channel Fault Status 8:1	Channel Fault Status Channel Fault Status bits must be set to 1 for channels that were detected in fault for fault types
4	Channel Fault Status 16:9	
5	Channel Fault Status 24:17	

Byte #	*Contents*	*Description*
6	Channel Fault Status 32:25	03, 09, 10, 11, 12, 13, and 14. For fault type 01, 05, and 20 a bit must be set in Channel Fault Status 8:1 for each enabled AMU that failed. Bit 0 must be set if the CMU detected a failure: b0 = CMU b1 = AMU #1 b2 = AMU #2 b3 = AMU #3 b4 = AMU #4 For all other fault types the Channel Fault Status bits must be set to 0.
7	Channel Red Status 8:1	Channel Color Status Channel Color Status bits must be set to 1 for channels that are sensed active. For channel inputs that have been remapped to a virtual channel (29-32), the Channel Fault Status bits must be set to 0. For virtual channel (29-32) inputs that have not been assigned to a physical output, the Channel Fault Status bits must be set to 0.
8	Channel Red Status 16:9	
9	Channel Red Status 24:17	
10	Channel Red Status 32:25	
11	Channel Yellow Status 8:1	
12	Channel Yellow Status 16:9	
13	Channel Yellow Status 24:17	
14	Channel Yellow Status 32:25	
15	Channel Green Status 8:1	
16	Channel Green Status 16:9	
17	Channel Green Status 24:17	
18	Channel Green Status 32:25	
19	Channel Red Status 8:1	Field Check Status Field Check Status bits must be set to 1 for channels that are sensed with field check status. For channel inputs that have been remapped to a virtual channel (29-32), the Field Check Status bits must be set to 0. For virtual channel (29-32) inputs that have not been assigned to a physical output, the Field Check Status bits must be set to 0.
20	Channel Red Status 16:9	
21	Channel Red Status 24:17	
22	Channel Red Status 32:25	
23	Channel Yellow Status 8:1	
24	Channel Yellow Status 16:9	
25	Channel Yellow Status 24:17	
26	Channel Yellow Status 32:25	
27	Channel Green Status 8:1	
28	Channel Green Status 16:9	
29	Channel Green Status 24:17	
30	Channel Green Status 32:25	
31	Control Status #1	Control Status #1 b7 = Start-up Call (1=Exit from Flash) b6 = Flasher Output Fail (1 = Fail) b5 = Rear Door (1=Open)

Byte #	*Contents*	*Description*
		b4 = Front Door (1=Open) b3 = MAIN CONTACTOR Coil (1=Active) b2 = MAIN CONTACTOR Secondary (1=Active) b1 = FTR Coil Drive (1= Active) b0 = Output Relay Transfer (1=Fault)
32	Control Status #2	Control Status #2 b7 = Reserved b6 = Reserved b5 = Reserved b4 = Reserved b3 = Reserved b2 = Reserved b1 = Reserved b0 = Configuration Change This bit set to 1 indicates the configuration programming has changed since the last poll of message 65. It must also be set to 1 when the CMU is exiting flash (Start-up Call bit changes from 0 to 1) and at CMU power-up.
33	AC+ Raw Voltage	CMU AC+ Raw Voltage
34	Assembly #1 AC+ Raw Voltage	Assembly AC+ Raw Voltage
35	Assembly #1 AC+ Raw Voltage	
36	Assembly #1 AC+ Raw Voltage	
37	Assembly #1 AC+ Raw Voltage	
38	Channel 1 Red Voltage	Channel Input Voltages The Channel input voltages must be the most recent values reported from the AMUs. For channel inputs that have been remapped to a virtual channel (29-32), the Channel Voltage value must be set to 0. For virtual channel (29-32) inputs that have not been assigned to a physical output, the Channel Voltage value must be set to 0.
39	Channel 2 Red Voltage	
40	Channel 3 Red Voltage	
41	Channel 4 Red Voltage	
42	Channel 5 Red Voltage	
43	Channel 6 Red Voltage	
44	Channel 7 Red Voltage	
45	Channel 8 Red Voltage	
46	Channel 9 Red Voltage	
47	Channel 10 Red Voltage	
48	Channel 11 Red Voltage	
49	Channel 12 Red Voltage	
50	Channel 13 Red Voltage	
51	Channel 14 Red Voltage	

Byte #	*Contents*	*Description*
52	Channel 15 Red Voltage	
53	Channel 16 Red Voltage	
54	Channel 17 Red Voltage	
55	Channel 18 Red Voltage	
56	Channel 19 Red Voltage	
57	Channel 20 Red Voltage	
58	Channel 21 Red Voltage	
59	Channel 22 Red Voltage	
60	Channel 23 Red Voltage	
61	Channel 24 Red Voltage	
62	Channel 25 Red Voltage	
63	Channel 26 Red Voltage	
64	Channel 27 Red Voltage	
65	Channel 28 Red Voltage	
66	Channel 29 Red Voltage	
67	Channel 30 Red Voltage	
68	Channel 31 Red Voltage	
69	Channel 32 Red Voltage	
70	Channel 1 Yellow Voltage	
71	Channel 2 Yellow Voltage	
72	Channel 3 Yellow Voltage	
73	Channel 4 Yellow Voltage	
74	Channel 5 Yellow Voltage	
75	Channel 6 Yellow Voltage	
76	Channel 7 Yellow Voltage	
77	Channel 8 Yellow Voltage	
78	Channel 9 Yellow Voltage	
79	Channel 10 Yellow Voltage	
80	Channel 11 Yellow Voltage	
81	Channel 12 Yellow Voltage	
82	Channel 13 Yellow Voltage	
83	Channel 14 Yellow Voltage	
84	Channel 15 Yellow Voltage	
85	Channel 16 Yellow Voltage	
86	Channel 17 Yellow Voltage	
87	Channel 18 Yellow Voltage	
88	Channel 19 Yellow Voltage	
89	Channel 20 Yellow Voltage	
90	Channel 21 Yellow Voltage	
91	Channel 22 Yellow Voltage	
92	Channel 23 Yellow Voltage	

Byte #	*Contents*	*Description*
93	Channel 24 Yellow Voltage	
94	Channel 25 Yellow Voltage	
95	Channel 26 Yellow Voltage	
96	Channel 27 Yellow Voltage	
97	Channel 28 Yellow Voltage	
98	Channel 29 Yellow Voltage	
99	Channel 30 Yellow Voltage	
100	Channel 31 Yellow Voltage	
101	Channel 32 Yellow Voltage	
102	Channel 1 Green Voltage	
103	Channel 2 Green Voltage	
104	Channel 3 Green Voltage	
105	Channel 4 Green Voltage	
106	Channel 5 Green Voltage	
107	Channel 6 Green Voltage	
108	Channel 7 Green Voltage	
109	Channel 8 Green Voltage	
110	Channel 9 Green Voltage	
111	Channel 10 Green Voltage	
112	Channel 11 Green Voltage	
113	Channel 12 Green Voltage	
114	Channel 13 Green Voltage	
115	Channel 14 Green Voltage	
116	Channel 15 Green Voltage	
117	Channel 16 Green Voltage	
118	Channel 17 Green Voltage	
119	Channel 18 Green Voltage	
120	Channel 19 Green Voltage	
121	Channel 20 Green Voltage	
122	Channel 21 Green Voltage	
123	Channel 22 Green Voltage	
124	Channel 23 Green Voltage	
125	Channel 24 Green Voltage	
126	Channel 25 Green Voltage	
127	Channel 26 Green Voltage	
128	Channel 27 Green Voltage	
129	Channel 28 Green Voltage	
130	Channel 29 Green Voltage	
131	Channel 30 Green Voltage	
132	Channel 31 Green Voltage	
133	Channel 32 Green Voltage	

Byte #	*Contents*	*Description*
134	Channel 1	Scaled Channel Load Current The value reported must be the measured current in Amperes times 256 divided by the Full Scale (FS) parameter. For 1 primary turn, FS=10 (range is 0 to 10 Arms) For 2 primary turns, FS=5 (range is 0 to 5 Arms) For 3 primary turns, FS= 3.3 (range is 0 to 3.3 Arms) For 4 primary turns, FS=2.5 (range is 0 to 2.5 Arms)
135	Channel 2	
136	Channel 3	
137	Channel 4	
138	Channel 5	
139	Channel 6	
140	Channel 7	
141	Channel 8	
142	Channel 9	
143	Channel 10	
144	Channel 11	
145	Channel 12	
146	Channel 13	
147	Channel 14	
148	Channel 15	
149	Channel 16	
150	Channel 17	
151	Channel 18	
152	Channel 19	
153	Channel 20	
154	Channel 21	
155	Channel 22	
156	Channel 23	
157	Channel 24	
158	Channel 25	
159	Channel 26	
160	Channel 27	
161	Channel 28	
162	Binary Seconds	CMU Time and Date
163	Binary Minutes	
164	Binary Hours (0:23)	
165	Binary Date	
166	Binary Month	
167	Binary Year	
168	Voltage * 4	24 VDC Supply Voltage
169	Voltage * 8	12 VDC Supply Voltage
170	degrees F + 40	CMU Temperature (Fahrenheit)
171	Channel 8:1	Channel Current Sense Status Status bits must be set to 1 for channels that are sensed active. Status bits must be set to 0 for channels that have the Current Sense monitor function disabled.
172	Channel 16:9	
173	Channel 24:17	
174	Channel 28:25	

Byte #	*Contents*	*Description*
175	Assembly 2:1	Output Assembly Flasher Status (1=Fail) b0 = Assembly #1 (#3) FL1-1 b1 = Assembly #1 (#3) FL1-2 b2 = Assembly #1 (#3) FL2-1 b3 = Assembly #1 (#3) FL2-2 b4 = Assembly #2 (#4) FL1-1 b5 = Assembly #2 (#4) FL1-2 b6 = Assembly #2 (#4) FL2-1 b7 = Assembly #2 (#4) FL2-2
176	Assembly 4:3	
177		Reserved
178		Reserved

Byte #	*Contents*	*Description*
1	62	Frame Type
2	FSA mode	Set Failed State Action b0 = Set LFSA (L) b1 = Set NFSA (N) b2:7 = reserved

d. Type 62 – Send to Local Flash Command – SET FSA.

e. Type 190 Response – Send to Local Flash Response – Set FSA.

Byte #	*Contents*	*Description*
1	190	Frame Type

f. Type 65 Command – Get CMU Configuration. The ATC Controller Unit must request the serial memory key programming using this message and validate that the CMU Permissive Program settings are equal or less permissive than the ATC Controller Unit programming, and that the AMU Configuration programming is consistent with Output Assembly SIU assignment. If the programming of the CMU is not proper, the ATC Controller Unit must issue a Type 62 frame with the L bit set causing a LFSA in the CMU. This check must be performed at initialization and when the Type 189 or Type 195 Control Status 2, Configuration Change bit is set to 1.

Byte #	*Contents*	*Description*
1	65	Frame Type

g. Type 193 Response – CMU Configuration.

Byte #	*Contents*	*Description*
1	193	Frame Type

2:513	Bytes #1 thru #512	Serial Memory Key Contents

h. Type 66 Command – Time and Date Command.

Byte #	*Contents*	*Description*
1	66	Frame Type
2	0x01:0x0C	Month
3	0x01:0x1F	Day
4	0x00:0x63	Year
5	0x00:0x17	Hour
6	0x00:0x3B	Minutes
7	0x00:0x3B	Seconds
8	0x00:0x3B	Tenth Seconds

This frame must be transmitted from the ATC Controller Unit once every second. The destination address must be the All Station Address of 255 (0xFF). No response from secondary devices is allowed to the All Station Address. The transmission of this frame must begin within +/-100 milliseconds of the ATC Controller Unit real time contained within the frame.

i. Type 67 Command – Switch Pack Drivers. The format of this command frame must be identical to Message 61 but requests a short status response from the CMU. This frame may be used as an alternate to Message 61. The destination for this frame must be the CMU. The Channel numbers in the Description column below refer to the channel numbers of the CMU. The ATC Controller Unit must include a definition, via program entry, of the CMU Channel to ATC Controller Unit signal driver group utilization.

The Dark Channel Map Select bits must select a preprogrammed mask in the CMU serial memory key that disables Lack of Signal Input monitoring for the selected channels.

Byte #	*Contents*	*Description*
1	67	Frame Type
2	Channel 8:1 Red	Switch Pack Status A bit set to 1 indicates the Switch Pack output is set ON.
3	Channel 16:9 Red	
4	Channel 24:17 Red	
5	Channel 28:25 Red	
6	Channel 8:1 Yellow	
7	Channel 16:9 Yellow	
8	Channel 24:17 Yellow	
9	Channel 28:25 Yellow	
10	Channel 8:1 Green	
11	Channel 16:9 Green	
12	Channel 24:17 Green	
13	Channel 28:25 Green	

Byte #	*Contents*	*Description*
14	Map Select	Dark Channel Map Select Bit 1 and bit 0 must select one of four Dark Channel Maps programmed in the serial memory key that disables Lack of Signal Input monitoring for a selected channel. Bits 2 thru 7 are reserved. 00 = Mask #1 01 = Mask #2 10 = Mask #3 11 = Mask #4

j. Type 195 Response – CMU Short Status. If the CMU is in FSA (byte #2, Fault Type not equal to 0), then the Channel Color Status bytes must contain an exact image of the signals that were applied to the CMU at the point in time of the detection of the failure. Control Status 1, Control Status 2, and Output Assembly Flasher Status must always reflect current status.

If a channel block is not used (AMU not present), the Channel Fault Status bits and Channel Color Status bits for that block must be set to 0.

Byte #	*Contents*	*Description*
1	195	Frame Type
2	Fault Type	Enumerated fault code 00 = No Fault 01 = CMU/AMU +24 VDC 02 = CMU +12 VDC 03 = Conflict 04 = Serial Bus #1 05 = Serial Bus #3 06 = ATC LFSA Flash (Type 62) 07 = ATC NFSA Flash (Type 62) 08 = Diagnostic 09 = Multiple 10 = Lack of Signal Input 11 = Short Yellow Clearance 12 = Skipped Yellow Clearance 13 = Yellow + Red Clearance 14 = Field Output Check 15 = Serial Memory Key absent 16 = Serial Memory Key FCS error 17 = Serial Memory Key Data error 18 = Local Flash

Byte #	*Contents*	*Description*
		19 = CB Trip 20 = CMU/AMU AC+ Raw Fail 21 = NRESET Active 22:127 = Reserved 128:255 = Spare
3	Channel Fault Status 8:1	Channel Fault Status Channel Fault Status bits must be set to 1 for channels that were detected in fault for fault types 03, 09, 10, 11, 12, 13, and 14. For fault type 01, 05, and 20 a bit must be set in Channel Fault Status 8:1 for each enabled AMU that failed. Bit 0 must be set if the CMU detected a failure: b0 = CMU b1 = AMU #1 b2 = AMU #2 b3 = AMU #3 b4 = AMU #4 For all other fault types the Channel Fault Status bits must be set to 0.
4	Channel Fault Status 16:9	
5	Channel Fault Status 24:17	
6	Channel Fault Status 32:25	
7	Channel Red Status 8:1	Channel Color Status Channel Color Status bits must be set to 1 for channels that are sensed active. For channel inputs that have been remapped to a virtual channel (29-32), the Channel Fault Status bits must be set to 0. For virtual channel (29-32) inputs that have not been assigned to a physical output, the Channel Fault Status bits must be set to 0.
8	Channel Red Status 16:9	
9	Channel Red Status 24:17	
10	Channel Red Status 32:25	
11	Channel Yellow Status 8:1	
12	Channel Yellow Status 16:9	
13	Channel Yellow Status 24:17	
14	Channel Yellow Status 32:25	
15	Channel Green Status 8:1	
16	Channel Green Status 16:9	

Byte #	*Contents*	*Description*
17	Channel Green Status 24:17	
18	Channel Green Status 32:25	
19	Control Status #1	Control Status #1 b7 = Start-up Call (1=Exit from Flash) b6 = Flasher Output Fail (1 = Fail) b5 = Rear Door (1=Open) b4 = Front Door (1=Open) b3 = MC Coil (1=Active) b2 = MC Secondary (1=Active) b1 = FTR Coil Drive (1= Active) b0 = Output Relay Transfer (1=Fault)
20	Control Status #2	Control Status #2 b7 = Reserved b6 = Reserved b5 = Reserved b4 = Reserved b3 = Reserved b2 = Reserved b1 = Reserved b0 = Configuration Change This bit set to 1 indicates the configuration programming has changed since the last poll of message 65. It must also be set to 1 when the CMU is exiting flash (Start-up Call bit changes from 0 to 1) and at CMU power-up.
21	Assembly 2:1	Output Assembly Flasher Status (1=Fail) b0 = Assembly #1 (#3) FL1-1 b1 = Assembly #1 (#3) FL1-2 b2 = Assembly #1 (#3) FL2-1 b3 = Assembly #1 (#3) FL2-2 b4 = Assembly #2 (#4) FL1-1 b5 = Assembly #2 (#4) FL1-2 b6 = Assembly #2 (#4) FL2-1 b7 = Assembly #2 (#4) FL2-2
22	Assembly 4:3	
23		Reserved
24		Reserved

E. Model 214 ITS Auxiliary Monitor Unit (AMU).

1. General. The AMU must reside in each of the Output Assemblies. The AMU must interface to the CMU via Serial Bus #3. An AMU must operate in a fourteen-channel mode (14 Pack) or a six-channel mode (6 Pack) depending on the Address Select inputs.

   a. AMU Addressing. The Address Select input pins ADDRESS 0, ADDRESS 1, and ADDRESS 2 must define the Serial Bus #3 address of the AMU and the number of channels reported. The pins must be left open for a logical False, and are connected to ADDRESS COMMON for a logical True.

Mode / Position	*ADDRESS 2*	*ADDRESS 1*	*ADDRESS 0*	*SB #3 ADDRESS*
14 Ch/1 and 2	False	False	True	0x01
14 Ch/3 and 4	False	True	True	0x03
6 Ch/1	True	False	True	0x05
6 Ch/2	True	True	False	0x06
6 Ch/3	True	True	True	0x07
6 Ch/4	True	False	False	0x04

   A 14 Pack Output Assembly configured in position 1 and 2 must respond as AMU #1 with AMU #2 reserved. A 14 Pack Output Assembly configured in position 3 and 4 must respond as AMU #3 with AMU #4 reserved.

   The 6 Pack Output Assembly must have ADDRESS 2 permanently connected to ADDRESS COMMON on the assembly.

2. AC Voltage Sensing. All AC RMS voltage measurements must be made over an RMS period of 33.3 milliseconds (two AC Line cycles). All AC signals must be sampled at a minimum of 1920 samples per second. A True RMS voltage measurement must be made regardless of phase or wave-shape, including both positive and negative half wave sinusoids, over the voltage range of 0 Volts RMS to 135 Volts RMS. AC voltage measurements must be accurate to +/-2 Volts RMS.

3. Field Signal Sensing. Three inputs must be provided for each of fourteen channels (36 total) to permit the monitoring of voltages at the Green, Yellow, and Red signal field terminals. The AMU must be designed so that unused Green, Yellow, or Red signal inputs are not sensed as active signals. The AMU must sense an input at less than 15 Volts RMS when connected to AC Line through 1500 picofarads. Each field input voltage must be reported in the Type 129 or 130 frame.

4. AC Line Sensing. The AMU must include the capability of monitoring the AC Line voltage applied to its AC+ Raw input. The AC Line voltage must be reported in the Type 129 or 130 frame.

5. Flasher Input Sensing. Four inputs must be provided for sensing of voltages at the FLASHER #1-1, FLASHER #1-2, FLASHER #2-1, and FLASHER #2-2 signal input

terminals of the Output Assembly. Each FLASHER input voltage must be reported in the Type 129 or 130 frame.

6. +24 VDC Sensing. The AMU must sense the state of the +24 VDC MONITOR input. Voltages at, or greater than, +22 VDC must be considered proper for Assembly operation. Voltages at, or less than, +18 VDC must be considered not proper for Assembly operation. The +24 VDC MONITOR state must be reported in the Type 129 or 130 frames. The +24 VDC MONITOR voltage section must be electrically isolated from the AC- Raw referenced circuitry.

7. Current Sensing.

   a. AC RMS Current Sensing. All AC RMS current measurements must be made over a period of two AC Line cycles (33.3 milliseconds). A True RMS current measurement must be made regardless of phase or wave-shape, including both positive and negative half wave sinusoids. AC current measurements must be accurate to +/-35%.

   b. Switch Pack Current Sensing. The AMU must sense the total output current of each Switch Pack. Each Switch Pack output current must be reported in the Type 129 or 130 frames.

      The input impedance of the COIL+ input with respect to the COIL-input must be 1000 Ohms. Full-scale current is set by the number of primary turns through the transformer and must be a maximum of four turns. Unless specified otherwise, one turn must be provided.

   c. Current Transformer Parameters. The Switch Pack current sensing transformers must meet the following requirements:

Linearity	25% from 10 milliamperes to 1Ampere (single primary turn)
Accuracy	+/-25% (Rin = 1000 Ohms)
Primary Current	10 Amperes maximum
Minimum hole size	0.25 in. diameter
Insulation Resistance	100 Megohms at 500 VDC

      The transformer must output a voltage of 1.0 Volts RMS (+/-5%) across 1K Ohms when driven by 1.0 Arms sinusoidal current through one primary turn. Sufficient secondary turns must be provided to compensate for differences in core material and losses to produce the 1.0 Volts RMS output.

8. Diagnostic Error. The AMU must be provided with a resident series of self-check diagnostic capabilities. At a minimum, the AMU must contain provisions to verify all memory elements on power-up and Reset. When an error is detected, the AMU must illuminate the DIAGNOSTIC indicator and disable the Serial Bus #3 port.

a. RAM Diagnostic. This test must verify that all RAM elements are operating correctly at power-up. Patterns must be written to RAM. Each Write must be followed by a Read to verify that it contains the written pattern.

b. Nonvolatile Memory Diagnostic. This test must verify that the nonvolatile ROM(s) contain the proper program. The routine must perform a check on each ROM and make a comparison with a preprogrammed check value. This test must be performed at power-up and at a minimum rate of 1024 bits per second during operation.

c. Internal MPU Monitor. The AMU must monitor the operation of its microprocessor. At a minimum, the monitoring circuit must be triggered at least every 100 milliseconds. The microprocessor must be reset and the DIAGNOSTIC indicator illuminated if the monitoring circuit has not been triggered for a maximum of 1000 milliseconds.

9. Power Requirements. The AMU must generate its own power supply voltage from the AC+ Raw input using no more than 5 Watts. It must be capable of insertion and removal while AC power is applied to the cabinet. Surge current on AC+ Raw input must be less than 2 Amperes peak.

a. Operating Voltage Range. The AMU must be operational over the voltage range of 80 Volts RMS to 135 Volts RMS. The AMU must be fully functional within 500 milliseconds following AC+ Raw voltage exceeding 80 Volts RMS or Reset.

b. Power Supply Holdup. During the loss of AC+ Raw voltage for 700 milliseconds or less the AMU must continue to operate.

10. AMU User Interface. All indicators must be clear LEDS. Clear LEDs must not depend on a reflector or diffusion as part of its design. Clear LEDs must only show the die and not appear to be ON when exposed to ambient light. The following indicators must be provided (Top to Bottom).

a. AC Power Indicator. A green POWER indicator must be provided. The indicator must be illuminated when the AC+ Raw input is 80 Volts RMS (+/-2 Volts RMS) or greater. This indicator must be labeled POWER.

b. Serial Bus #3 Indicator. A yellow Serial Bus #3 indicator must be provided. The indicator must pulse ON for 40 milliseconds each time the AMU correctly receives a frame with its address on the Bus #3 input. This indicator must be labeled SB #3 RX.

c. Diagnostic Indicator. A red DIAGNOSTIC indicator must be provided. The indicator must be ON when an internal diagnostic error is detected. This indicator must be labeled DIAGNOSTIC.

d. Reset Button. A recessed RESET switch must be provided which applies a direct reset to the microprocessor device on the AMU. All voltage and current data must be initialized to 0 following Reset. The access hole must be 0.25 in. in diameter.

e. AMU Connector. The AMU connector must be a DIN 4161296 Header Type. Pins A31 (Equipment Ground), B32 (AC-Raw), and C32 (AC-Raw) must pre-mate before all other pins. The AMU pin assignments must be as shown on drawing 4-11-6.

11. Bus #3 Profile.

a. Electrical. TxD+, TxD- and RxD+, RxD- must consist of two interface links conforming to the requirements of the Electronic Industries Association EIA-485, Standard for Electrical Characteristics of Generators and Receivers for use in Balanced Digital Multipoint Systems, dated April 1983. Where differences occur between the EIA-485 standard and this document, this document must govern.

All voltage potentials on the Bus #3 TxD+, TxD-, RxD+, and RxD- interface links must be referenced to AC- Raw.

b. Data Link Layer. The data link layer protocol is based on a subset of HDLC as defined by ISO/IEC 3309. Each frame must consist of the following fields:

(1) Flag byte = 0x7E

(2) Address byte = 0x01 through 0x07

(3) Control byte = 0x13 (U Format)

(4) Information field = defined below in section, Frame Types

(5) Frame Check Sequence = 16 bit FCS procedure defined in clause 4.6.2 of ISO/IEC 3309.

(6) Flag byte = 0x7E

Transmission must be in start/stop mode with basic transparency defined by clause 4.5.2.2 of ISO/IEC 3309 applied. The format must be 8 bit data, 1 stop bit, no parity, and 153,600 bits per second (+/-2%). Only asynchronous half duplex operation must be permitted.

c. Procedures. Frames transmitted by the CMU must be referred to as command frames and frames transmitted by the AMU must be referred to as response frames. Command frames must be transmitted only to those AMUs that are present, as determined by the programming entries made in the CMU. Response frames must only be transmitted as a result of correctly receiving a command frame. The first eight bits in each information field must contain the frame Type number. There must be a maximum of 64 different command frame types and 64 different response frame types. Additionally, there must be 64 different command frame types reserved for special application use and 64 different response frame types reserved for special application use, as outlined below.

FRAME TYPES	FUNCTION
1-63	Command frame defined by this standard

0, 64-127 Command frame reserved
128-191 Response frame defined by this standard
192-255 Response frame reserved
Reserved bits must always be set to zero by the transmitting station.

d. Service Time. The AMU must begin its response to command frames from the CMU within a designated period of time following the correct reception of a complete command frame including the closing flag. This period must be known as the Service Time and must have a maximum value of 500 microseconds. The AMU TxD link output must be in its high impedance state outside of the interval defined by the Service Time plus Response Time.

e. Response Time. The AMU must complete its transmission of the response frame including the closing flag within a designated time known as the Response Time, depending on the number of bytes transmitted in the response frame. The AMU TxD link output must be in its high impedance state a maximum of 200 microseconds following the transmission of the closing flag. The Response Time period must have a maximum value of (1.2)*(# of bytes in information field +6)*(10/153600). Note that due to the transparency mechanism, any occurrence of the flag byte (0x7E) or control escape byte (0x7D) in the information field adds a second byte to the count. Thus, the number of bytes in the information field could be doubled if all characters are 0x7E or 0x7D.

f. Dead Time. Following the transmission of each command frame, there must be a Dead Time during which the CMU does not transmit. This Dead Time must be a minimum of the Service Time plus the Response Time.

12. Frame Types.

a. Type 1 Command Frame. This frame must be transmitted from the CMU to each AMU-6 at least once every RMS period (33.3 milliseconds, two AC Line cycles, averaging time for RMS measurement). Its purpose is to request the status from an AMU-6. Polling the AMU-6 more often than the RMS period may result in the same response frame being repeated.

Byte #	*Contents*	*Description*
1	01	Frame Type

b. Type 129 Response Frame. This AMU-6 Status frame must be transmitted only if a Type 1 command frame has been correctly received from the CMU. The AMU-6 must report the data for the most recent RMS period calculated when the Type 1 command is received. The Type 1 command frame polling rate must not affect the accuracy or RMS period of the data.

Byte #	*Contents*	*Description*
1	129	Frame Type
2	AMU Status	6 Pack AMU Status

Byte #	*Contents*	*Description*
		b0 = set to 1 if +24 VDC MONITOR input is Low b1:4 = reserved b5 = set if AMU has reset since last poll b6 = set if last RMS period data was not transmitted b7 = diagnostic failure
3	0-135	AC+ Raw voltage
4	Channel 1 Red	Channel RMS Voltages
5	Channel 2 Red	
6	Channel 3 Red	
7	Channel 4 Red	
8	Channel 5 Red	
9	Channel 6 Red	
10	Channel 1Yellow	
11	Channel 2 Yellow	
12	Channel 3 Yellow	
13	Channel 4 Yellow	
14	Channel 5 Yellow	
15	Channel 6 Yellow	
16	Channel 1 Green	
17	Channel 2 Green	
18	Channel 3 Green	
19	Channel 4 Green	
20	Channel 5 Green	
21	Channel 6 Green	
22	Flasher #1-1	Flasher RMS Voltages
23	Flasher #1-2	
24	Flasher #2-1	
25	Flasher #2-2	
26	Channel 1	Channel Load Current The current value reported must be the measured current in Amperes times 255 divided by the Full Scale (FS) parameter. For 1 primary turn, FS =1.0 (range is 0 to 1.0 Arms) For 2 primary turns, FS =0.5 (range is 0 to 0.5 Arms) For 3 primary turns, FS = 0.33 (range is 0 to 0.33 Arms) For 4 primary turns, FS =0.25 (range is 0 to 0.25 Arms)
27	Channel 2	
28	Channel 3	
29	Channel 4	
30	Channel 5	
31	Channel 6	
32	0	Reserved

Byte #	*Contents*	*Description*
33	0	Reserved

c. Type 2 Command Frame. This frame must be transmitted from the CMU to each AMU-14 at least once every RMS period. Its purpose is to request the status from an AMU-14. Polling the AMU-14 more often than the RMS period may result in the same response frame being repeated.

Byte #	*Contents*	*Description*
1	02	Frame Type

d. Type 130 Response Frame. This AMU-14 Status frame must be transmitted only if a Type 2 command frame has been correctly received from the CMU. The AMU-14 must report the data for the most recent RMS period calculated when the Type 2 command is received. The Type 2 command frame polling rate must not affect the accuracy or RMS period of the data.

Byte #	*Contents*	*Description*
1	130	Frame Type
2	AMU Status	14 Pack AMU Status b0 = set to 1 if +24 VDC MONITOR input is Low b1:4 = reserved b5 = set if AMU has reset since last poll b6 = set if last RMS period data was not transmitted b7 = diagnostic failure
3	0-135	AC+ Raw voltage
4	Channel 1 Red	Channel RMS Voltages
5	Channel 2 Red	
6	Channel 3 Red	
7	Channel 4 Red	
8	Channel 5 Red	
9	Channel 6 Red	
10	Channel 7 Red	
11	Channel 8 Red	
12	Channel 9 Red	
13	Channel 10 Red	
14	Channel 11 Red	
15	Channel 12 Red	
16	Channel 13 Red	
17	Channel 14 Red	
18	Channel 1Yellow	
19	Channel 2 Yellow	
20	Channel 3 Yellow	

Byte #	*Contents*	*Description*
21	Channel 4 Yellow	
22	Channel 5 Yellow	
23	Channel 6 Yellow	
24	Channel 7Yellow	
25	Channel 8 Yellow	
26	Channel 9 Yellow	
27	Channel 10 Yellow	
28	Channel 11 Yellow	
29	Channel 12 Yellow	
30	Channel 13 Yellow	
31	Channel 14 Yellow	
32	Channel 1 Green	
33	Channel 2 Green	
34	Channel 3 Green	
35	Channel 4 Green	
36	Channel 5 Green	
37	Channel 6 Green	
38	Channel 7 Green	
39	Channel 8 Green	
40	Channel 9 Green	
41	Channel 10 Green	
42	Channel 11 Green	
43	Channel 12 Green	
44	Channel 13 Green	
45	Channel 14 Green	
46	Flasher #1-1	Flasher RMS Voltages
47	Flasher #1-2	
48	Flasher #2-1	
49	Flasher #2-2	
50	Channel 1	Channel Load Current The current value reported must be the measured current in Amperes times 255 divided by the Full Scale (FS) parameter. For 1 primary turn, FS =1.0 (range is 0 to 1.0 Arms) For 2 primary turns, FS =0.5 (range is 0 to 0.5 Arms) For 3 primary turns, FS = 0.33 (range is 0 to 0.33 Arms) For 4 primary turns, FS =0.25 (range is 0 to 0.25 Arms)
51	Channel 2	
52	Channel 3	
53	Channel 4	
54	Channel 5	
55	Channel 6	
56	Channel 7	
57	Channel 8	
58	Channel 9	
59	Channel 10	
60	Channel 11	
61	Channel 12	
62	Channel 13	

Byte #	*Contents*	*Description*
63	Channel 14	
64	0	Reserved
65	0	Reserved

e. Type 128 Response Frame. This frame must be transmitted from the AMU to the CMU as a Negative Acknowledge response frame if the AMU correctly receives a command frame with an invalid parameter.

Byte #	*Contents*	*Description*
1	128	Frame Type (Negative Acknowledge)
2	Status	AMU SB #3 Error Type b0 = set to 1 if invalid frame type received b1:7 = reserved

F. Model 216-12 & 216-24 ITS Power Supply Units.

1. General Requirements.

a. The unit chassis must be vented. The power supply cage and transformers must be securely braced to prevent damage in transit. When resident in the PDA ITS, the units must be held firmly in place by its stud screws and wing nut.

b. Two units, 216-12 and 216-24 must provide +12 and +24 VDC, respectively, to the cabinet assemblies. They must be of ferro-resonant design. They must have no active components and conform to the requirements of this section.

(1) Line and load regulation must meet the two power supply ranges for +24 VDC (23.0 VDC to 26 VDC) and +12 VDC (11.65 VDC to 13.35 VDC). This includes ripple noise; from 90 VAC to 135 VAC at 60 Hertz, plus an additional 1.6% for each additional 1.0% frequency change; and current range from 1 Ampere to 5 Amperes with a maximum temperature rise of 30 degrees C above ambient.

(2) Design Center Voltage must be +24 VDC (+/-0.5 VDC) and +12 VDC (+/-0.5 VDC) at full load, at 30 degrees C, and with 115 VAC incoming after a 30-minute warm-up period.

(3) Full Load Current must be 5 AMPERES each for +24 VDC and +12 VDC, minimum.

(4) Ripple Noise must be 2 Volts peak-to-peak and 500 millivolts RMS at full load.

(5) Line Voltage must be 90 VAC to 135 VAC.

(6) Efficiency must be 70% minimum.

(7) Circuit capacitors must be rated for 40 Volts minimum.

c. When supplying only one 216-24, supply terminal pins 13 and 14 must be jumpered together.

d. The front panel must include AC and DC fuses, power ON light and banana clip test points for monitoring the output voltages. The unit, including terminals, must be protected with a 1K Ohm, 0.5 watt, resister to prevent accidental contact with energized parts.

G. Type 218 – Serial Interface Unit (SIU).

1. General. The SIU must be capable of processing fifty-four Input/Output pins and four Optical Input pins. When installed in an ITS Input Assembly, it processes twenty-four detector outputs (pins F and W), twenty-four detector status outputs, and provides six detector rest signals (per two slots). In advanced detectors, the status outputs may be converted to per channel resets. When installed in an ITS 14 Pack Output Assembly, the SIU controls fourteen Switch Pack Units (forty-two Outputs) and four Optical Inputs through the CDC socket.

2. Power Requirements. The SIU requires a nominal supply voltage of 24 VDC (+/-2 VDC). A voltage of 16 VDC or less must be considered loss of power and a voltage of 18 VDC or greater must be considered adequate for operation. The SIU must not require more than 300 milliamperes over the voltage range of 16 VDC to 30 VDC and the power surge must be limited to a maximum of 1.25 Amperes from initial application of DC power. The SIU must not be damaged by insertion to, or removal from, powered input or output assemblies. The SIU operates normally for 700 milliseconds after power loss.

3. Microprocessor. The SIU Controller Unit must include a microprocessor/controller unit together with all required clocking and support circuitry.

4. Memory. Operational software necessary to meet housekeeping and functional requirements must be provided resident in socketed firmware or internal Flash memory.

5. Control Signals. The SIU uses NRESET lines for SIU shut down/turn on operations matching the ATC Controller Unit CPU. The SIU must be fully initialized and providing specified operation upon NRESET Line going HIGH (Power Up). In the ATC Controller, the NRESET operation must cause the SIU program restart. No prior message operation data retention is required. The Request Module Status Response may report this restart as either a Power On or Watchdog. ATC Controller Unit LINESYNC is used as a system time reference. The microprocessor/controller unit is reset by any of the following:

   - Pushbutton Reset
   - NRESET Signal
   - +5 VDC out of regulation
   - Microprocessor/controller unit watchdog

6. Time Reference. The SIU includes a 1 Kilohertz Time Reference to provide system response time stamps. The 1 Kilohertz Time Reference must maintain a frequency accuracy of +/-0.01% (+/-0.1 counts per second).

7. Watchdog. A watchdog circuit must be provided. The SIU must power up with the watchdog enabled. Within the first watchdog time period, the watchdog value must be set to 200 milliseconds +/-100 milliseconds. The watchdog state must be reported in the SIU status byte as an indication that a watchdog has occurred, which will remain until cleared in the Request Module Status command. Failure of the SIU to reset the watchdog timer must result in hardware reset.

8. Millisecond Counter. A 32-bit Millisecond Counter must be provided for "time stamping." Each 1 Kilohertz reference must increment the Millisecond Counter.

9. Buffers. A Transition Buffer must be provided capable of holding a minimum of 1024 recorded entries. The Transition Buffer must default to empty. There must be two entry types: Transition and Rollover. The inputs must be monitored for state transition. At each transition (if the input has been configured to report transition, a transition entry must be added to the Transition Buffer. If multiple inputs change state during one input sample, these transitions must be entered into the Input Transition Buffer by increasing input number. The Millisecond Counter must be monitored for rollover. At each rollover transition ($xxxx FFFF - $xxxx 0000), a rollover entry must be added to the Transition Buffer. For rollover entries, all bits of byte 1 are set to indicate that this is a rollover entry. A new entry must be discarded when storage is not available for the new entry. Transition Buffer blocks are sent to the ATC Controller Unit upon command. Upon confirmation of their reception, the blocks must be removed from the Transition Buffer. The entry types are as follows:

Input Transition Entry

Description	*msb*							*lsb*	*Byte Number*
Transition Entry Identifier	S	Input Number (I0 – I59)							1
Timestamp NLSB	x	x	x	x	x	x	x	x	2
Timestamp LSB	x	x	x	x	x	x	x	x	3

Millisecond Counter Rollover Entry

Description	*msb*							*lsb*	*Byte Number*
Rollover Entry Identifier	1	1	1	1	1	1	1	1	1
Timestamp MSB	x	x	x	x	x	x	x	x	2
Timestamp NMSB	x	x	x	x	x	x	x	x	3

10. Power Up Initialization. At Power Up, the SIU loss of communications timer must indicate loss of communications until the user program sends the Request Module Status message to reset the "E" Bit and a subsequent set output command is processed.

11. Interrupts. All interrupts must be capable of asynchronous operation with respect to all processing and all other interrupts. The SIU includes three interrupt sources as follows:

    a. MILLISECOND Interrupt. MILLISECOND Interrupt must be activated by the Time Reference. A timestamp rollover flag set by Millisecond Counter (MC) rollover must be cleared only on command.

    b. LINESYNC Interrupt. The LINESYNC signal must be generated by the controller power supply. LINESYNC Interrupt must be generated by both the 0-1 and 1-0 transitions of the LINESYNC signal. The LINESYNC interrupt must monitor the Millisecond Counter interrupt and set the Millisecond Counter error flag if there has not been an interrupt from the 1 Kilohertz source for 0.5 seconds (≥60 consecutive LINESYNC interrupts). The LINESYNC interrupt must synchronize the 1 KHz time reference with the 0-1 transition of the LINESYNC signal once a second. A LINESYNC error flag must be set if the LINESYNC interrupt has not successfully executed for 0.5 seconds or longer (≥500 consecutive millisecond interrupts).

    c. Line Frequency Reference. The Line Frequency Reference input pin must receive a square wave signal from the cabinet power supply for the purposes of synchronizing SIU outputs with the AC line. Line Frequency Reference Interrupt must be generated by both the 0-1 and 1-0 transitions of the Line Frequency Reference signal. The Line Frequency Reference interrupt must monitor the Millisecond Counter interrupt and set the Millisecond Counter error flag if there has not been an interrupt from the 1 Kilohertz source for 0.5 seconds (≥60 consecutive Line Frequency Reference interrupts). The Line Frequency Reference interrupt must synchronize the Time Reference with the 0-1 transition of the Line Frequency Reference signal once a second. A Line Frequency Reference error flag must be set if the Line Frequency Reference interrupt has not successfully executed for 0.5 seconds or longer (≥500 consecutive millisecond interrupts). The electrical characteristics of the Line Frequency input are as follows:

        (1) A voltage between 0 and 8 volts must be considered the LOW state, and must occur when the AC line is in the positive half cycle.

        (2) A voltage between 16 and 26 volts must be considered the High state, and must occur when the AC line is in the negative half-cycle.

        (3) The Line Frequency Reference input must exhibit a nominal impedance of 10K (+/-10%) to the +24 VDC input and must not have more than 1000 picofarads of load capacitance.

        (4) The rise and fall time of the signal connected to this input must not exceed 50 microseconds.

        The SIU/BIU input must be used by the SIU to determine the AC timing source. If the SIU/BIU input is grounded, LINESYNC must be used as the interrupt

source. If the SIU/BIU input is pulled up, Line Frequency Reference must be used as the interrupt source.

d. Communication Service Routine. A low-level communication service routine must be provided to handle reception, transmission, and EIA-485 communication faults. The communication server must automatically:

For Transmission:

Generate the opening and closing flags
Generate the CRC value
Generate the abort sequence (minimum of 8 consecutive '1' bits) when commanded by the Microprocessor Unit
Provide zero bit insertion

For Reception:

Detect the opening and closing flags
Provide address comparison, generating an interrupt for messages addressed to the SIU, and ignoring messages not addressed to the SIU
Strip out inserted zeros
Calculate the CRC value, compare it to the received value, and generate an interrupt on an error
Generate an interrupt if an abort sequence is received

12. Communication Processing. The task must be to process the command messages received from the ATC Controller Unit, prepare, and start response transmission. The response message transmission must begin within 4 milliseconds of the receipt of the received message. The SIU must complete the execution of each command within 70 milliseconds of the end of each response message transmission.

13. Input Processing. This task must process the raw input data scanned in by the 1 milliseconds interrupt routine, perform all filtering, and maintain the transition queue entries.

14. Inputs and Outputs. The SIU must have four Optically Coupled Inputs, fifty-four Parallel Input/Outputs and four Serial Ports.

a. Optically-Coupled Inputs.

(1) Opto Common. The Opto Common input must be the common reference pin for four Opto Inputs.

(2) Opto Inputs. The Opto Inputs are intended to provide optical isolation for Pedestrian Detection, internal cabinet functions, Remote Interconnect or other auxiliary inputs. The Opto Inputs are intended to connect through external 27K Ohm, 1-Watt resistors for 120 VAC operations, and are intended for direct connection to 12 VAC for Pedestrian Detector applications. These inputs may

also be used for low-true DC applications when the Opto Common pin is connected to -24 VDC. These inputs may function in the place of 242/252 isolator modules.

(a) The Opto Inputs must provide electrical isolation of 10 Megohms minimum resistance and 1000 VAC RMS minimum breakdown to all connector pins except the Opto Common pin, at a maximum breakdown leakage current of 1 milliamperes RMS.

(b) These inputs must exhibit nominal impedance to the Opto Common pin of 5000 Ohms, +10% to the Opto Common input.

(c) The Opto Inputs must not recognize 3 Volts RMS (AC sinusoid or DC) or less relative to the Opto Common input.

(d) The Opto Inputs must recognize 8 Volts RMS (AC sinusoid or DC) or more relative to the Opto Common input.

(e) Any steady state voltage applied between an Opto Input and the Opto Common must not exceed 35 VAC RMS.

(f) Opto Inputs must not be acknowledged when active for 25 milliseconds or less, and must be acknowledged when active for 50 milliseconds or more.

The first Output Assembly assignments must be dedicated as follows:

PIN	*1st OUTPUT ASSEMBLY*	*APPLICABLE HOUSING TYPE*
Opto Input 1	Manual Control Enable	All
Opto Input 2	Interval Advance	All
Opto Input 3	Stop Time	All
Opto Input 4	Manual Flash	All
Opto Input Comon	AC-	All

b. Parallel Inputs and Outputs. SIU must control fifty-four input/output lines using ground-true logic.

(1) Input Section. Each input must be read logic "1" (ON) when the input voltage at its field connector input is less than 8 VDC, and must be read logic "0" (OFF) when the input voltage exceeds 16 VDC. Each input must have an internal pull-up to +24 VDC of 11K Ohms maximum, and must not deliver greater than 10 milliamperes to a short circuit to ground.

(2) Output Section. Each output written as a logic "1" (ON) must have a voltage at its field connector output of less than 4.0 VDC. Each output written as logic "0" (OFF) must provide an open circuit (1 Megohm or more) at its field connector output. Each output must consist of an open-collector capable of driving 40 VDC minimum and sinking 100 milliamperes minimum. Each output circuit must be

capable of switching from logic "1" to logic "0" within 100 microseconds when connected to a load of 100K Ohms minimum. Each output circuit must be protected from transients of 10 microseconds (+/-2 microseconds) duration, +/-300 VDC from a 1K Ohm source, with a maximum rate of 1 pulse per second. Each output must latch the data written and remain stable until either new data is written or the active-low reset signal. Upon an active-low reset signal, each output must latch a logic "0" and retain that state until a new writing. The state of all output circuits at the time of Power Up or in Power Down state must be OFF. It must be possible to simultaneously assert all outputs within 100 microseconds of each other. An output circuit state not changed during a new writing must not glitch when other output circuits are updated.

(3) Input/Output Function. Each parallel Input/Output function contains all of the functions listed below of both the Input Function and Output Function.

(4) Input Section Function. Input scanning must begin at I0 (bit 0) and proceed to the highest numbered input, ascending from LSB to MSB. Each complete input scan must finish within 100 microseconds. Once sampled, the logic state of an input must be held until the next input scan. Each input must be sampled 1,000 times per second. The time interval between samples must be 1 milliseconds (+/-100 microseconds). The Millisecond Counter must be sampled within 10 microseconds of the completion of the input scan.

(5) Input Data Filtering. If configured, the inputs must be filtered by the SIU to remove signal bounce. The filtered input signals must then be monitored for changes as noted. The filtering parameters for each input must consist of Ignore Input Flag and the ON and OFF filter samples. If the Ignore Input flag is set, no input transition entries must be placed into the Input Transition buffer. The ON and OFF filter samples must determine the number of consecutive samples an input must be ON and OFF, respectively, before a change of state is recognized. If the change of state is shorter than the specified value, the change of state must be ignored. The ON and OFF filter values must be in the range of 0 to 255. A filter value of 0, for either or both values, must result in no filtering for this input. The default values for input signals after reset must be as follows:

Filtering:	Enabled
On and off filter values must be set to:	5
Transition monitoring:	Disabled (Timestamps are not logged)

(6) Output Function. Simultaneous assertion of all outputs must occur within 100 microseconds. Each output must be capable of being individually configured in state to ON, OFF, or a state synchronized with either phase of LINESYNC. The condition of the outputs must only be "ON" if the SIU continues to receive active communications from the ATC Controller Unit. If there is no valid communications with the ATC Controller Unit for 2.0 seconds, all outputs must

revert to the OFF condition, and the SIU status byte must be updated to reflect the loss of communication from the ATC Controller Unit. The data and control bits in the ATC Controller Unit-SIU frame protocol must control each output as follows:

Output Bit Translation

Case	*Output Data Bit*	*Output Control Bit*	*Function*
A	0	0	Output in the OFF state
B	1	1	Output is a square wave, synchronized to the LINESYNC signal. When LINESYNC is ON (1), the output is OFF, and when LINESYNC is OFF (0), the output is ON.
C	0	1	Output is a square wave, synchronized to the LINESYNC signal. When LINESYNC is ON (1), the output is ON, and when LINESYNC is OFF (0), the output is OFF
D	1	0	Output is in the ON state.

In Case A above, the corresponding output must be turned OFF if previously ON and if previously OFF remain OFF until otherwise configured. For half-cycle switching (cases B and C), all outputs to be changed must be changed within 50 microseconds after the corresponding LINESYNC transition and must remain in the same state during the entire half cycle. In Case D above, the corresponding output must be turned ON if previously OFF and if previously ON remain ON until otherwise configured. All outputs must never change state unless configured to do so.

(7) Serial Ports. The SIU must have a minimum of four serial ports, identified as SIU Ports 1-4. Serial Ports 1 and 3 are connected to the SIU microprocessor/controller unit, while Serial Ports 2 and 4 provide a buffered communications path from the ATC Controller Unit to the detectors, and are not connected to the microprocessor/controller unit. Communications circuitry must be capable of 614.4 Kilobits per second of data pass through.

(a) SIU Port 1 Operation. Port 1 must interface the SIU to Serial Bus 1 of the ITS cabinet Modular Bus Assemblies. All communications circuitry and protocol must match Serial Bus 1 requirements. The SIU must function as the "LOCAL" command node for this network responding with appropriate action. See ATC Controller Unit specification, CPU Field I/O, for protocol and requirements. The SP5 SDLC frame address assignments (Command/Responses) are as follows:

Address	*SYSTEM ASSEMBLY / UNIT*	*SIU ADDRESS*

		A7	*A6*	*A5*	*A4*	*A3*	*A2*	*A1*	*A0*
0	Reserved								
1	14 Pack in position 1	0	0	0	0	0	0	0	1
2	Reserved								
3	14 Pack in position 3	0	0	0	0	0	0	1	1
4	6 Pack in position 4	0	0	0	0	0	1	0	0
5	6 Pack in position 1	0	0	0	0	0	1	0	1
6	6 Pack in position 2	0	0	0	0	0	1	1	0
7	6 Pack in position 3	0	0	0	0	0	1	1	1
8	Reserved								
9	Input #1	0	0	0	0	1	0	0	1
10	Input #2	0	0	0	0	1	0	1	0
11	Input #3	0	0	0	0	1	0	1	1
12	Input #4	0	0	0	0	1	1	0	0
13	Input #5	0	0	0	0	1	1	0	1
14	Reserved								
15	CMU #1	0	0	0	0	1	1	1	1
16	CMU #2	0	0	0	1	0	0	0	0
17	CMU #3	0	0	0	1	0	0	0	1
18	CMU #4	0	0	0	1	0	0	1	0
19	CPU	0	0	0	1	0	0	1	1
20	FI/O 2A or 8	0	0	0	1	0	1	0	0
21 to 254	Reserved								
255	Broadcast All	1	1	1	1	1	1	1	1

Note 1: A0 to A3 are Input to SIU with DC ground as common.

Note 2: 0 = open or ground false. 1= closed or ground true (shunted)

(b) SIU Port 2 Operation. SIU Port 2 must interface to Serial Bus 2 of the ITS cabinet Modular Bus Assemblies providing a communications path to the ATC Controller Unit for block data retrieval. No connection exists between SIU Port 1 and SIU Port 2. Similarly, no connection exists between SIU Port 2 and the microprocessor/controller unit. All data transfers between SIU Ports 1 and 2 must be accomplished by the ATC Controller Unit. For example, data sent back may include monitor diagnostic status and communication status; input diagnostics status (detector sensor or isolator); and processed channel inputs data such as rate counts, occupancies, average speeds, speed classification and incident/presence.

- Synchronous Operation. If the ATC Controller Unit is communicating via Logical Port SP3S, SIU Port 2 must communicate in SDLC format and protocol, and the hardware requirements must match Serial Bus 2

(synchronous TX/RX using TxC from the ATC Controller Unit CPU for common clocking).

- Asynchronous Operation. If the ATC Controller Unit is communicating via Logical Port SP3, SIU Port 2 must communicate in an asynchronous START BIT/STOP BIT format and protocol.
- SIU Port 3 Operation. The SIU Port 3 must be provided for communication to a personal computer via a front panel 9-position subminiature D-type connector and EIA-232 logic. Its purpose is to upload diagnostic information, and to download the SIU program. The SIU Port 3 protocol must be defined by the vendor, and operate with vendor-supplied software. The pin assignments of SIU Port 3 must match that of ATC Controller Unit C60 port.
- SIU Port 4 Operation. SIU Port 4 consists of Detector Rack signal INBUS TxD, INBUS RxD, INBUS TxC, and INBUS RxC, and must conform to the electrical standards of EIA-485, single-ended. In this scheme, the RxD- and RxC- inputs of the EIA-485 receivers are connected to 2.5 Volts, while the TxD- and TxC- outputs of the EIA-485 drivers are not used. SIU Port 4 receivers must withstand +/-25 Volts, suitable for reception of EIA-232 bipolar signals. All four INBUS signals must be terminated at each receiver with impedance of 6,800 Ohms (+/-5%), connected from signal to +5V Ground on the SIU. The detector vendor must define the SIU Port 4 messages. The detector vendor must define the SIU Port 4 protocol. The SIU provides one inversion to ensure a controller MARK equates to a detector MARK. The SIU must provide an LED indicator for TxD and RxD, such that is illuminated during a MARK (START Bit, for example) and extinguished during a SPACE (STOP Bit, for example). SIU Port 4 provides the buffering to SIU Port 2, allowing the ATC Controller Unit to communicate directly to the detectors, as follows:

Synchronous Operation. If the ATC Controller Unit is communicating to detectors via Logical Port SP3S, the SIU Port 4 buffers must convert SIU Port 2 TxD+ and TxD- to EIA-485 which must then be transmitted to the detectors via INBUS TxD. Likewise, the SIU Port 4 buffers must convert SIU Port 2 TxC+ and TxC- to EIA-485, which must then be transmitted to the detectors via INBUS TxC.

If the ATC Controller Unit is communicating to detectors via Logical Port SP3S, the SIU Port 4 buffers must convert INBUS RxD from EIA-485, which must then be transmitted to the ATC Controller Unit via SIU Port 2 RxD+ and RxD-. Likewise, the SIU Port 4 buffers must convert INBUS RxC from EIA-485, which must then be transmitted to the ATC Controller Unit via SIU Port 2 RxC+ and RxC-.

Asynchronous Operation. If the ATC Controller Unit is communicating to detectors via Logical Port SP3, the SIU Port 4 buffers must convert SIU Port 2 TxD+ and TxD- to EIA-485 which must be transmitted to the detectors via INBUS TxD.

If the ATC Controller Unit is communicating to detectors via Logical Port SP3, the SIU Port 4 buffers must convert INBUS RxD is from EIA-485, which must be transmitted to the ATC Controller Unit via SIU Port 2 RxD+ and RxD-.

Asynchronous operation must not use Port 2 TxC+, TxC-, RxC+, RxC-, nor Port 4 INBUS TxC, or INBUS RxC.

Assembly Address Output. The SIU must sense the rack address block and generate a square wave on the ASSEMBLY ADDRESS signal as follows:

ASSEMBLY ADDRESS	*ASSEMBLY ADDRESS FREQUENCY (Hertz)(+/-15%)*
1	60
2	30
3	15
4	7.5
5	3.75

INBUS RTS Input. The INBUS RTS line must be pulled to +24 Volts via a 10K Ohm resistor on the SIU. In systems using legacy detectors that do not use INBUS RTS, this line must not be used (no connection). Detectors equipped with INBUS RTS must drive this line low when transmitting data from that detector to the SIU via INBUS. When not transmitting data, this line must not be driven low and is pulled to +24V via the 10K Ohm resistor.

Serial Bus 2 Control. The controller transmits a message on Serial Bus 2 which must be received by each detector via the SIU INBUS TxD and INBUS TxC. If the detector is asynchronous, INBUS TxC must be ignored. Each detector must compare the address field of the message with its own slot address and assembly address. If the address matches, that detector must respond with data on INBUS RxD and INBUS RxC. If the detector is asynchronous, INBUS RxC must not be used. The SIU of the responding detector must enable its EIA-485 line drivers to transmit the response from INBUS to SB2. This driver must be enabled by any of the three following conditions:

Activity on INBUS RxD
Activity on INBUS RxC
INBUS RTS at low (true)

This driver must be disabled by either of the following two conditions:

Lack of activity on both INBUS RxD and RxC for 1.5 milliseconds
Inbus RTS transitions from low (true) to high (false)

15. Data Communications Protocol. All communication with the ATC Controller Unit must be SDLC-compatible command-response protocol, support 0-bit stuffing, and operate at a data rate of 614.4 Kilobits per second. The ATC Controller Unit must always initiate the communication and should the command frame be incomplete or in error, no SIU response must be transmitted.

    a. Frame Type. The frame type must be determined by the value of the first byte of the message. The command frames type values $70 - $7F and associated response frame type values $F0 - $FF are allocated to the Manufacturer diagnostics. All other frame types not called out are reserved. The command-response Frame Type values and message times must be as follows:

Frame Types

Module Command	***I/0 Module Response***	***Description***	***Minimum Message Time***	***Maximum Message Time***
49	177	Request Module Status	250 microseconds	275 microseconds
50	178	MILLISECOND CTR. Mgmt.	222.5 microseconds	237.5 microseconds
51	179	Configure Inputs	344.5 microseconds	6.8750 milliseconds
52	180	Poll Raw Input Data	317.5 microseconds	320 microseconds
53	181	Poll Filtered Input Data	317.5 microseconds	320 microseconds
54	182	Poll Input Transition Buffer	300 microseconds	10.25 milliseconds
55	183	Command Outputs	405 microseconds	410 microseconds
56	184	Config. Input Tracking Functions	340 microseconds	10.25 milliseconds
57	185	Config. Complex Output Functions	340 microseconds	6.875 milliseconds
58	186	Reserved	---	---
59	187	Reserved	---	---
60	188	SIU Identification	222.5 microseconds	222.5 microseconds
61-62	189-190	Reserved (note below)	---	---
63	191	Reserved	---	---
64	192	Reserved	---	---
65	193	Reserved (note below)	---	---
66	---	Reserved (note below)	---	---
67	195	Reserved (note below)	---	---

Messages 61/189, 62/190, 65/193, and 67/195 must be for ITS Cabinet Monitor Unit. See ITS Cabinet Monitor System Serial Bus #1 for Command and Response Frames. Message 66/No Response is a Broadcast Message to Address 255 containing the

current time. Any device may receive and process this message if it has the software capacity.

b. Request Module Status. The Command must be used to request SIU status information response. Command/Response frames must be as follows:

Request Module Status Command

Description	***msb***							***lsb***	***Byte Number***
(Type Number = 49)	0	0	1	1	0	0	0	1	Byte 1
Reset Status Bits	P	E	K	R	T	M	L	W	Byte 2

Request Module Status Response

Description	***msb***							***lsb***	***Byte Number***
(Type Number = 177)	1	0	1	1	0	0	0	1	Byte 1
System Status	P	E	K	R	T	M	L	W	Byte 2
SCC Receive Error Count	Receive Error Count								Byte 3
SCC Transmit Error Count	Transmit Error Count								Byte 4
MC Timestamp MSB	MC Timestamp MSB								Byte 5
MC Timestamp NMSB	MC Timestamp NMSB								Byte 6
MC Timestamp NLSB	MC Timestamp NLSB								Byte 7
MC Timestamp LSB	MC Timestamp LSB								Byte 8

The response status bits are defined as follows:

P - Indicates SIU hardware reset
E - Indicates a communications loss of greater than 2 seconds
M - Indicates an error with the Millisecond Counter interrupt
L - Indicates an error in the LINESYNC
W - Indicates that the SIU has been reset by the Watchdog
R - Indicates that the EIA-485 receive error count byte has rolled over
T - Indicates that the EIA-485 transmit error count byte has rolled over
K - Not Used

Each of these bits must be individually reset by a '1' in the corresponding bit of any subsequent Request Module Status frame, and the response frame must report the current status bits. The SCC error count bytes must not be reset. When a count rolls over (255 - 0), its corresponding roll-over flag must be set.

c. Millisecond Counter Management. The Millisecond Counter Management Frame must be used to set the value of the Millisecond Counter. The 'S' bit must return status '0' on completion or '1' on error. The 32-bit value must be loaded into the Millisecond Counter at the next 0-1 transition of the LINESYNC signal. The frames must be as follows:

Millisecond Counter Management Command

Description	***msb***							***lsb***	***Byte Number***
(Type Number = 50)	0	0	1	1	0	0	1	0	Byte 1
New MC Timestamp MSB	x	x	x	x	x	x	x	x	Byte 2
New MC Timestamp NMSB	x	x	x	x	x	x	x	x	Byte 3
New MC Timestamp NLSB	x	x	x	x	x	x	x	x	Byte 4

New MC Timestamp LSB	x	x	x	x	x	x	x	x	Byte 5

Millisecond Counter Management Response

Description	***msb***							***lsb***	***Byte Number***
(Type Number = 178)	1	0	1	1	0	0	1	0	Byte 1
Status	0	0	0	0	0	0	0	S	Byte 2

d. Configure Inputs. The Configure Inputs command frame must be used to change input configurations. The command-response frames must be as follows:

Configure Inputs Command

Description	***msb***							***lsb***	***Byte Number***
(Type Number = 51)	0	0	1	1	0	0	1	1	Byte 1
Number of Items (n)	n	n	n	n	n	n	n	n	Byte 2
Item # - Byte 1	E	Input Number (I0 – I59)							Byte 3(I-1)+3
Item # - Byte 2	Leading edge filter (e)								Byte 3(I-1)+4
Item # - Byte 3	Trailing edge filter (r)								Byte 3(I-1)+5

NOTE: In the case of an invalid parameter error, the entire message must be rejected.

Configure Inputs Response

Description	***msb***							***lsb***	***Byte Number***
(Type Number = 179)	1	0	1	1	0	0	1	1	Byte 1
Status	0	0	0	0	0	0	0	S	Byte 2

Block field definitions must be as follows:

E - Ignore Input Flag. "1" = do not record transition entries for this input, "0" = record transition entries for this input

e - A one-byte leading edge filter specifying the number of consecutive input samples which must be "0" before the input is considered to have entered to "0" state from "1" state (range 1 to 255, 0 = filtering disabled)

r - A one-byte trailing edge filter specifying the number of consecutive input samples which must be "1" before the input is considered to have entered to "1" state from "0" state (range 1 to 255, 0 = filtering disabled)

S - return status S = '0' on completion or '1' on error

e. Poll Raw Input Data. The Poll Raw Input Data frame must be used to poll the SIU for the current unfiltered status of all inputs. The response frame must contain 8 bytes (Inputs 0-63) of information indicating the current input status. The frames must be as follows:

Poll Raw Input Data Command

Description	***msb***							***lsb***	***Byte Number***
(Type Number = 52)	0	0	1	1	0	1	0	0	Byte 1

Poll Raw Input Data Response

Description	***msb***							***lsb***	***Byte Number***
(Type Number = 180)	1	0	1	1	0	1	0	0	Byte 1
Inputs I0 (lsb) to I7 (msb)	x	x	x	x	x	x	x	x	Byte 2
Inputs I8 to I53, I56 to I59	x	x	x	x	x	x	x	x	Bytes 3 to 9
MC Timestamp MSB	x	x	x	x	x	x	x	x	Byte 10
MC Timestamp NMSB	x	x	x	x	x	x	x	x	Byte 11
MC Timestamp NLSB	x	x	x	x	x	x	x	x	Byte 12
MC Timestamp LSB	x	x	x	x	x	x	x	x	Byte 13

f. Poll Filtered Input Data. The Poll Filtered Input Data frame must be used to poll the SIU for the current filtered status of all inputs. The response frame must contain 8 bytes (Inputs 0-63) of information indicating the current filtered status of the inputs. Raw input data must be provided in the response for inputs that are not configured for filtering. The frames must be as follows:

Poll Filter Input Data Command

Description	***msb***							***lsb***	***Byte Number***
(Type Number = 53)	0	0	1	1	0	1	0	1	Byte 1

Poll Filter Input Data Response

Description	***msb***							***lsb***	***Byte Number***
(Type Number = 181)	1	0	1	1	0	1	0	1	Byte 1
Inputs I0 (lsb) to I7 (msb)	x	x	x	x	x	x	x	x	Byte 2
Inputs I8 to I53, I56 to I59	x	x	x	x	x	x	x	x	Bytes 3 to 9
MC Timestamp MSB	x	x	x	x	x	x	x	x	Byte 10
MC Timestamp NMSB	x	x	x	x	x	x	x	x	Byte 11
MC Timestamp NLSB	x	x	x	x	x	x	x	x	Byte 12
MC Timestamp LSB	x	x	x	x	x	x	x	x	Byte 13

g. Poll Input Transition Buffer. The Poll Input Transition Buffer frame must poll the SIU for the contents of the input transition buffer. The response frame must include a three-byte information field for each of the input changes that have occurred since the last interrogation. The frames are as follows:

Poll Input Transition Buffer Command

Description	***msb***							***lsb***	***Byte Number***
(Type Number = 54)	0	0	1	1	0	1	1	0	Byte 1
Block Number	x	x	x	x	x	x	x	x	Byte 2

Poll Input Transition Buffer Response

Description	***msb***							***lsb***	***Byte Number***
(Type Number = 182)	1	0	1	1	0	1	1	0	Byte 1
Block Number	x	x	x	x	x	x	x	x	Byte 2
Number of Entries = N	x	x	x	x	x	x	x	x	Byte 3
Item #	S	Input Number (I0 – I59)							Byte 3(I-1)+4
Item # MC Timestamp NLSB	x	x	x	x	x	x	x	x	Byte 3(I-1)+5
Item # MC Timestamp LSB	x	x	x	x	x	x	x	x	Byte 3(I-1)+6
Status	0	0	0	0	C	F	E	G	Byte 3(I-1)+7
MC Timestamp MSB	x	x	x	x	x	x	x	x	Byte 3(N-1)+8
MC Timestamp NMSB	x	x	x	x	x	x	x	x	Byte 3(N-1)+9
MC Timestamp NLSB	x	x	x	x	x	x	x	x	Byte 3(N-1)+10
MC Timestamp LSB	x	x	x	x	x	x	x	x	Byte 3(N-1)+11

Each detected state transition for each active input is placed in the queue as it occurs. Bit definitions are as follows:

S - Indicates the state of the input after the transition, bit is 1 if the Input is ON after the transition, bit is 0 if the Input is OFF after the transition

C - Indicates the 255 entry buffer limit has been exceeded

F - Indicates the 1024 buffer limit has been exceeded

G - Indicates the requested block number is out of monotonic increment sequence

E - Same block number requested, E is set in response

The entries provided within the Transition Buffer Poll response must be ordered from the start of the reply as the oldest to newest. The very first access provides the oldest entry. The SIU device must initialize, upon Power Up or Reset, its last Block Number received value to 0xFF in order to facilitate suppression of the G Bit response when the ATC Controller Unit program starts and uses 0x00 as the first Block Number. Subsequent responses are subject to the old-buffer purge mechanism stated below.

The ATC Controller Unit program monotonically increases the Block Number after each command issued to purge the old buffer. When the SIU Module receives this command, it must compare the associated Block Number with the Block Number of the previously received command. If it is the same, the previous buffer must be re-sent to the ATC Controller Unit and the 'E' flag set in the status response frame. If it is not equal to the previous Block Number, the old buffer must be purged and the next block of data sent. If the block number is not incremented by one, the status G bit must be set. The block number received becomes the current number (even if out of sequence). The Block Number byte sent in the response block must be the same as

that received in the command block. The Block Number counter rollover (0xFF becomes 0x00) must be considered as a normal increment.

h. Set Outputs. The Set Outputs frame must be used to command the SIU to set the Outputs according to the data in the frame. If there is any error configuring the outputs, the 'E' flag in the response frame must be set to '1'. If the LINESYNC reference has been lost, the 'L' bit in the response frame must be set. Loss of LINESYNC reference must also be indicated in system status information. These command and response frames are as follows:

Set Outputs Command

Description	***msb***							***lsb***	***Byte Number***
(Type Number = 55)	0	0	1	1	0	1	1	1	Byte 1
Outputs O0 (lsb) to O7 (msb) Data	x	x	x	x	x	x	x	x	Byte 2
Outputs O8 to O54 Data	x	x	x	x	x	x	x	x	Bytes 3 to 8
Outputs O56 to O63 Data (reserved)	0	0	0	0	0	0	0	0	Byte 9
Outputs O0 (lsb) to O7 (msb) Control	x	x	x	x	x	x	x	x	Byte 10
Outputs O8 to O54 Control	x	x	x	x	x	x	x	x	Bytes 11 to 16
Outputs O56 to O63 Control (reserved)	0	0	0	0	0	0	0	0	Byte 17

Set Outputs Response

Description	***msb***							***lsb***	***Byte Number***
(Type Number = 183)	1	0	1	1	0	1	1	1	Byte 1
Status	0	0	0	0	0	0	L	E	Byte 2

i. Configure Input Tracking Functions. The Configure Input Tracking Functions frame must be used to configure the definition for an output that responds to transitions on a particular input. The maximum number of active definitions is 8. Refer to 'Tracking Functions Overview' for additional details.

Please note that Configure Input Tracking Functions is not intended for use with Traffic Signal Control Applications. (Authorized Engineering Information)

(1) Command and Response Frames. The command and response frames for Input Tracking Functions must be as follows:

Configure Input Tracking Functions Command

Description	***msb***							***lsb***	***Byte Number***
(Type Number = 56)	0	0	1	1	1	0	0	0	Byte 1
Number of Items	Number of Items								Byte 2
Item # - Byte 1	E	Output Number (O0 – O54)							Byte 2(I-1)+3
Item # - Byte 2	I	Input Number (I0 – I59)							Byte 2(I-1)+4

Number of Items: 0-16 Tracking Definitions are contained in this message.

Field Definitions:

E '1' - Enable Input Tracking function for this Output
'0' - Remove Input Tracking function for this Output
I '1' - Output is OFF when Input is ON, ON when Input OFF
'0' - Output is ON when Input is ON, OFF when Input is OFF

Output Number: 0 - Maximum Output Number for the SIU device type.
Input Number: 0 - Maximum Input Number for the SIU device type.

Configure Input Tracking Functions Response

Description	***msb***							***lsb***	***Byte Number***
(Type Number = 184)	1	0	1	1	1	0	0	0	Byte 1
Status	0	0	0	0	0	0	0	V	Byte 2
MC Timestamp MSB	x	x	x	x	x	x	x	x	Byte 3
MC Timestamp NMSB	x	x	x	x	x	x	x	x	Byte 4
MC Timestamp NLSB	x	x	x	x	x	x	x	x	Byte 5
MC Timestamp LSB	x	x	x	x	x	x	x	x	Byte 6

Field Definitions:

V '1' - Maximum number of configurable outputs will be exceeded.
'0' - No error

(2) Timestamp. The timestamp value must be sampled prior to the response frame.

(3) Output Updates. Outputs, which track inputs, must be updated no less than once per millisecond. Input to output signal propagation delay must not exceed 2 milliseconds.

(4) Tracking Functions Overview. A maximum of eight different Output numbers may be activated by specifying eight definitions.

One complete definition for an Output that tracks an Input consists of two bytes containing four parameters: 1) the instruction to install or to remove the definition, 2) the Output Number, 3) the relationship of the state of the Output to the Input and 4) the Input Number.

Each definition specifies the controlling Input number for that unique output number. More than one output definition may specify the same Input controlling source. [That is, the same input may be used as the control source for more than one Tracking Output.]

A complete definition is called an Item in the Command Message frame. The 'Number of Items' byte specifies the quantity of complete definitions contained in the Command Frame. If the value is 0, all existing active Input Tracking definitions must be removed.

The transmission of a definition may:

(a) install a new active Tracking definition.

(b) remove an existing active Tracking definition. When an Input Tracking definition is removed, the output is set according to the most recently received Set Outputs Command.

(c) convert an active output definition from Complex or Square Wave definition to Tracking. Conversion removes the existing definition and assigns the Tracking definition without a transition through the 'output is set according to the most recently received Set Outputs Command' state. The most recent state of the output remains until the new function changes it.

(d) redefine an existing Tracking definition.

If a command frame to be processed by the SIU would result in having more than the maximum number (8) of definitions activated, the entire command frame must be rejected. The response V bit must be set to 1.

The V bit response is based on counting the current active quantity plus the projected Enable definitions after accounting for Remove definitions and invalid Output numbers.

The V bit response evaluation takes the currently active definition quantity, adds the projected Enable definitions, subtracts the Remove definitions, ignores invalid Input and Output numbers and compares the result to the Maximum Number of active Tracking definitions allowed. If the quantity of Active definitions would become greater than the Maximum Number of active Tracking definitions, or if there are more Remove definitions than existing active definitions, the V Bit must be set in the response.

While processing an Enable request, an Out of Range Input number must preclude processing for that definition.

The Out of Range Output and Input numbers must not affect the active definition count. No error response is returned.

The rest of the message must be processed.

The "Number of Items" field is valid from 0 to 16 because the longest message may contain 8 Enable and 8 Remove definitions.

The Input state always comes from the Filtered Input Data source.

Valid Input and Output Number Ranges:

ITS SIU device types: Inputs 0 - 53 & 56 - 59, Outputs 0 – 54

j. Configure Complex Output Functions. The Configure Complex Output Functions frame must be used to configure the definition for an output that provides a complex operation. The maximum number of active definitions is 8. Refer to 'Complex Output Functions Overview' for additional details.

Please note that Configure Complex Output Functions is not intended for use with Traffic Signal Control Applications. (Authorized Engineering Information)

(1) Command and Response Frames. The command and response frames must be as follows:

Configure Complex Output Functions Command

Description	***msb***							***lsb***	***Byte Number***
(Type Number = 57)	0	0	1	1	1	0	0	1	Byte 1
Number of Items	Number of Items								Byte 2
Item # - Byte 1	0	Output Number (O0 – O54)							Byte 7(I-1)+3
Item # - Byte 2	Primary Duration (MSB)								Byte 7(I-1)+4
Item # - Byte 3	Primary Duration (LSB)								Byte 7(I-1)+5
Item # - Byte 4	Secondary Duration (MSB)								Byte 7(I-1)+6
Item # - Byte 5	Secondary Duration (LSB)								Byte 7(I-1)+7
Item # - Byte 6	0	Input Number (I0 – I59)							Byte 7(I-1)+8
Item # - Byte 7	P	W	G	E	J	F	R	L	Byte 7(I-1)+9

Number of Items: 0-16 Complex Output Definitions are contained in this message.
Output Number: 0 - Maximum Output Number for the SIU device type.
Primary Duration: MSB & LSB form a 16 bit Hex numerical value 0x0000 - 0xffff.
Secondary Duration: MSB & LSB form a 16 bit Hex numerical value 0x0000 - 0xffff.
Input Number: 0 - Maximum Input Number for the SIU device type..

Field Definitions:

P '1' - The output is configured for single-pulse operation. Once complete, the complex output function must be disabled.
'0' - The output is configured for continuous oscillation.

W '1' - It is triggered by the specified input. Triggered complex output must commence within 2 milliseconds of the associated trigger recognition.
'0' - Operation must begin within 2 milliseconds of the command receipt.

G '1' - Operation must be gated active by the specified input.
'0' - Gating is inactive.

E '1' Enable complex output function for this output
'0' Remove complex output function for this output

J '1' During primary duration, the output must be written as a logic '1'. During secondary duration, the output must be written as a logic '0'.
'0' During primary duration, the output must be written as a logic '0'. During secondary duration, the output must be written as a logic '1'

F '1' - The trigger or gate must be acquired subsequent to filtering the specified input. The raw input signal must be used if filtering is not enabled for the specified input.
'0' - The trigger or gate must be derived from the raw input.

R '1' - For triggered output, the output must be triggered by an ON-to-OFF transition of the specified input and must be triggered immediately upon command receipt if the input is OFF. For gated output, the output must be active while the input is OFF.
'0' - For triggered output, the output must be triggered by an OFF-to-ON transition of the specified input and must be triggered immediately upon command receipt if the input is ON. For gated output, the output must be active while the input is ON.

L '1' - The LINESYNC based clock must be used for the time ticks.
'0' - The Millisecond Counter must be used for the time ticks.

Configure Complex Output Functions Response

Description	***msb***							***lsb***	***Byte Number***
(Type Number = 185)	1	0	1	1	1	0	0	1	Byte 1
Status	0	0	0	0	0	0	0	V	Byte 2
MC Timestamp (MSB)	x	x	x	x	x	x	x	x	Byte 3
MC Timestamp (NMSB)	x	x	x	x	x	x	x	x	Byte 4
MC Timestamp (NLSB)	x	x	x	x	x	x	x	x	Byte 5
MC Timestamp (LSB)	x	x	x	x	x	x	x	x	Byte 6

Field Definitions:

V '1' - Maximum number of configurable outputs will be exceeded.
'0' - No error

(2) Sampling Rate. Controlling input signals must be sampled at least once per millisecond.

(3) Complex Output Functions Overview. A maximum of eight different Output numbers may be activated by specifying eight definitions.

One complete definition for a Complex Output consists of seven bytes containing fourteen parameters:

1) the Output Number,
2, 3) Primary Duration: MSB & LSB form a 16 bit Hex numerical value,
4, 5) Secondary Duration: MSB & LSB form a 16 bit Hex numerical value,
6) the Input Number,
7) Bit P: One Pulse or Continuous Oscillation,
8) Bit W: Output Operation is Edge Triggered by Input or Not Triggered by Input,
9) Bit G: Output Operation is Gated by Input or is Continuous Oscillation,
10) Bit E: Enable Definition or Remove Definition,
11) Bit J: Defines Primary/Secondary Duration relationship: ON/OFF or OFF/ON,
12) Bit F: Input from Filtered or Raw Data,
13) Bit R: Selects Edge for Triggered by Input ON to OFF or OFF to ON. Bit R: Selects State for Gated to be active by Input OFF or by Input ON, 14) Linesync edges or Millisecond Counter provides tick timing.

Each definition specifies the controlling Input number for that unique output number. The Input is a functional control only when the operation is specified as Triggered (W=1) or Gated (G=1). Otherwise, the Input number is ignored. More than one output definition may specify the same Input controlling source. [That is, the same input may be used as the control source for more than one Complex Output.] If both W=1 and G=1 are set in the definition, the G=1 must be used as if W=0.

The primary duration is the first timed interval of a pulse or the first portion of a continuous oscillation. The first portion follows acquisition of a Trigger or Gated Input. If not Triggered or Gated, the first portion follows the activation of the definition.

The secondary duration follows the Primary duration.

A complete definition is called an Item in the Command Message frame.

The 'Number of Items' byte specifies the quantity of complete definitions contained in the Command Frame. If the value is 0, all existing active Complex Output definitions must be removed.

The transmission of a definition may:

(a) install a new active Complex Output definition.

(b) remove an existing active Complex Output definition. When a Complex Output definition is removed, the output is set according to the most recently received Set Outputs Command.

(c) convert an active output definition from Tracking or Square Wave definition to Complex Output. Conversion removes the existing definition and assigns the Complex Output definition without a transition through the 'output is set according to the most recently received Set Outputs Command' state. The most recent state of the output remains until the new function changes it.

(d) redefine an existing Complex Output definition.

If a command frame to be processed by the SIU would result in having more than the maximum number (8) definitions activated, the entire command frame must be rejected. The response V bit must be set to 1.

The V bit response evaluation takes the currently active definition quantity, adds the projected Enable definitions, subtracts the Remove definitions, ignores invalid Input and Output numbers and compares the result to the maximum number of active Complex definitions allowed. If the quantity of active definitions would become greater than the maximum number of active Complex Output definitions, or if there are more Remove definitions than existing active Complex Output definitions, the V Bit must be set in the response.

While processing an Enable request that requires Triggered or Gated operation, an Out of Range Input number must preclude processing for that definition.

The Out of Range Output and Input numbers must not affect the active definition count. No error response is returned.

The rest of the message must be processed.

The "Number of Items" field is valid from 0 to 16 because the longest message may contain 8 Enable and 8 Remove definitions.

The Input state comes from the Filtered or Raw Input Data source as specified by the Bit F value.

Valid Input and Output Number Ranges:
ITS SIU device types: Inputs 0 - 53 & 56 - 59, Outputs 0 – 54

The LINESYNC based clock must used both the rising and falling edges providing a nominal 8.33 millisecond time tick.

k. Module Identification. The SIU Identification command frame must be used to request the SIU Identification value for ITS Cabinet SIUs and CMUs. Reply message must

use the following addresses: ATC Controller Unit Field I/Os must respond with address 20. SIUs respond with their own address ranging from 0-14. CMUs respond with their own addresses, ranging from 15-18.

The command and response frames must be shown as follows:

I/O Module Identification Command

Description	***msb***							***lsb***	***Byte Number***
(Type Number= 60)	0	0	1	1	1	1	0	0	Byte 1

I/O Module Identification Response

Description	***msb***							***lsb***	***Byte Number***
(Type Number= 188)	1	0	1	1	1	1	0	0	Byte 1
SIU I D byte	x	x	x	x	x	x	x	x	Byte 2

16. Address Select Inputs. The Address Select input bits must define the logical position of each SIU. No connection must be logical False, while a connection to Logic Ground must be a logical True. There must be sixteen unique address positions selected with a binary code, using bit 0 as least significant and bit 3 as most significant.

17. SIU/BIU Input. The SIU must contain one input that must be read directly by microprocessor. When not connected, this input must be logical False, while a connection to Ground must be a logical True.

18. Hardware Requirements.

    a. Size. The SIU Module must be physically composed of a printed circuit board, 4.5 in. high by 6.5 in. long, a front panel 2.25 in. wide by 4.5 in. high with a DIN 96-pin connector on the connector end (opposite the front panel).

    b. SIU Insertion and Extraction. A "U" handle must be mounted on the front panel for insertion/extraction.

    c. LED Indicators. Six LED indicators must be provided on the front panel, as follows:

SIU Active	SIU Power	Serial Bus 1 TxD
Serial Bus 2 TxD	Serial Bus 1 RxD	Serial Bus 2 RxD

    The Serial Bus 1 indicators must be sensed on the microprocessor/controller pins. Serial Bus 2 indicators must be sensed on the Port 4 (EIA-485) signal lines. The SIU Power LED must indicate that the +24 VDC power supply is within regulation. The SIU Active LED must be controlled via SIU I/O 55.

    d. Push Buttons. The SIU front panel must provide a RESET pushbutton that must provide a hardware RESET to the microprocessor/controller unit.

e. 9-position Subminiature D-type Connector. A 9-position subminiature D-type connector must be mounted on the front panel for Port 3 entry. The connector pin assignment is Pin 2- RxD, Pin 3- TxD and Pin 5- Signal Ground.

f. SIU Input Connector. The SIU Input Connection pin assignments must be as shown in drawing 4-11-8.

19. SIU Input and Output Assignments.

SIU	*Set Output Command Type 55*	*Raw Input Data Response Type 180*
I/O 0	BYTE 2 BIT 0	BYTE 2 BIT 0
I/O 1	BYTE 2 BIT 1	BYTE 2 BIT 1
I/O 2	BYTE 2 BIT 2	BYTE 2 BIT 2
I/O 3	BYTE 2 BIT 3	BYTE 2 BIT 3
I/O 4	BYTE 2 BIT 3	BYTE 2 BIT 4
I/O 5	BYTE 2 BIT 5	BYTE 2 BIT 5
I/O 6	BYTE 2 BIT 6	BYTE 2 BIT 6
I/O 7	BYTE 2 BIT 7	BYTE 2 BIT 7
I/O 8	BYTE 3 BIT 0	BYTE 3 BIT 0
I/O 9	BYTE 3 BIT 1	BYTE 3 BIT 1
I/O 10	BYTE 3 BIT 2	BYTE 3 BIT 2
I/O 11	BYTE 3 BIT 3	BYTE 3 BIT 3
I/O 12	BYTE 3 BIT 4	BYTE 3 BIT 4
I/O 13	BYTE 3 BIT 5	BYTE 3 BIT 5
I/O 14	BYTE 3 BIT 6	BYTE 3 BIT 6
I/O 15	BYTE 3 BIT 7	BYTE 3 BIT 7
I/O 16	BYTE 4 BIT 0	BYTE 4 BIT0
I/O 17	BYTE 4 BIT 1	BYTE 4 BIT1
I/O 18	BYTE 4 BIT 2	BYTE 4 BIT2
I/O 19	BYTE 4 BIT 3	BYTE 4 BIT3
I/O 20	BYTE 4 BIT 4	BYTE 4 BIT4
I/O 21	BYTE 4 BIT 5	BYTE 4 BIT5
I/O 22	BYTE 4 BIT 6	BYTE 4 BIT6
I/O 23	BYTE 4 BIT 7	BYTE 4 BIT7
I/O 24	BYTE 5 BIT0	BYTE 5 BIT 0
I/O 25	BYTE 5 BIT1	BYTE 5 BIT 1
I/O 26	BYTE 5 BIT2	BYTE 5 BIT 2

SIU	*Set Output Command Type 55*	*Raw Input Data Response Type 180*
I/O 27	BYTE 5 BIT3	BYTE 5 BIT 3
I/O 28	BYTE 5 BIT4	BYTE 5 BIT 4
I/O 29	BYTE 5 BIT5	BYTE 5 BIT 5
I/O 30	BYTE 5 BIT6	BYTE 5 BIT 6
I/O 31	BYTE 5 BIT7	BYTE 5 BIT 7
I/O 32	BYTE 6 BIT0	BYTE 6 BIT 0
I/O 33	BYTE 6 BIT1	BYTE 6 BIT 1
I/O 34	BYTE 6 BIT2	BYTE 6 BIT 2
I/O 35	BYTE 6 BIT3	BYTE 6 BIT 3
I/O 36	BYTE 6 BIT4	BYTE 6 BIT 4
I/O 37	BYTE 6 BIT5	BYTE 6 BIT 5
I/O 38	BYTE 6 BIT6	BYTE 6 BIT 6
I/O 39	BYTE 6 BIT7	BYTE 6 BIT 7
I/O 40	BYTE 6 BIT0	BYTE 6 BIT 0
I/O 41	BYTE 7 BIT1	BYTE 7 BIT 1
I/O 42	BYTE 7 BIT2	BYTE 7 BIT 2
I/O 43	BYTE 7 BIT3	BYTE 7 BIT 3
I/O 44	BYTE 7 BIT4	BYTE 7 BIT 4
I/O 45	BYTE 7 BIT5	BYTE 7 BIT 5
I/O 46	BYTE 7 BIT6	BYTE 7 BIT 6
I/O 47	BYTE 7 BIT7	BYTE 7 BIT 7
I/O 48	BYTE 8 BIT0	BYTE 8 BIT 0
I/O 49	BYTE 8 BIT1	BYTE 8 BIT 1
I/O 50	BYTE 8 BIT2	BYTE 8 BIT 2
I/O 51	BYTE 8 BIT3	BYTE 8 BIT 3
I/O 52	BYTE 8 BIT4	BYTE 8 BIT 4
I/O 53	BYTE 8 BIT5	BYTE 8 BIT 5
Active LED (O54)	BYTE 8 BIT6	
Opto Input 1 (I56)		BYTE 9 BIT 0
Opto Input 2 (I57)		BYTE 9 BIT 1
Opto Input 3 (I58)		BYTE 9 BIT 2
Opto Input 4 (I59)		BYTE 9 BIT 3

SIU	*Set Output Command Type 55*	*Raw Input Data Response Type 180*
A000		BYTE 9 BIT 4
A001		BYTE 9 BIT 5
A002		BYTE 9 BIT 6
A003		BYTE 9 BIT 7

A000 to A003 must be the address of the SIU.

20. Block Diagrams.

    a. SIU Structure. Each SIU must contain 54 Input/Outputs and each must be connected as follows:

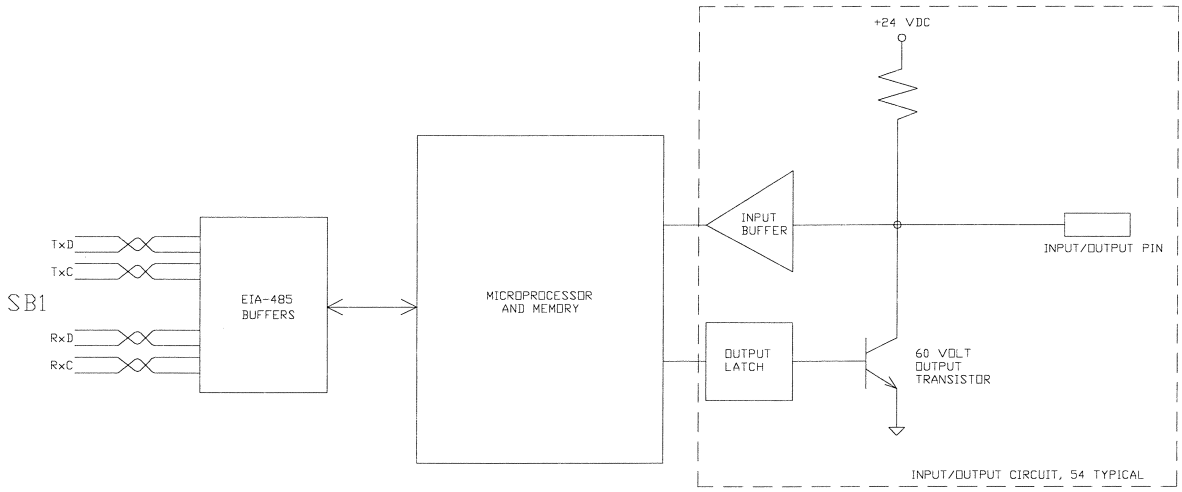

Figure 3
SIU Input/Output Connections.

When the SIU is powered, all outputs must be initialized OFF and fifty-four inputs must be available. Without jumpers or firmware changes, the Controller software must be able to turn ON any of the fifty-four outputs. Each output must be able to be read back as an input in order to check integrity.

    b. Existing CALTRANS-style Detectors.

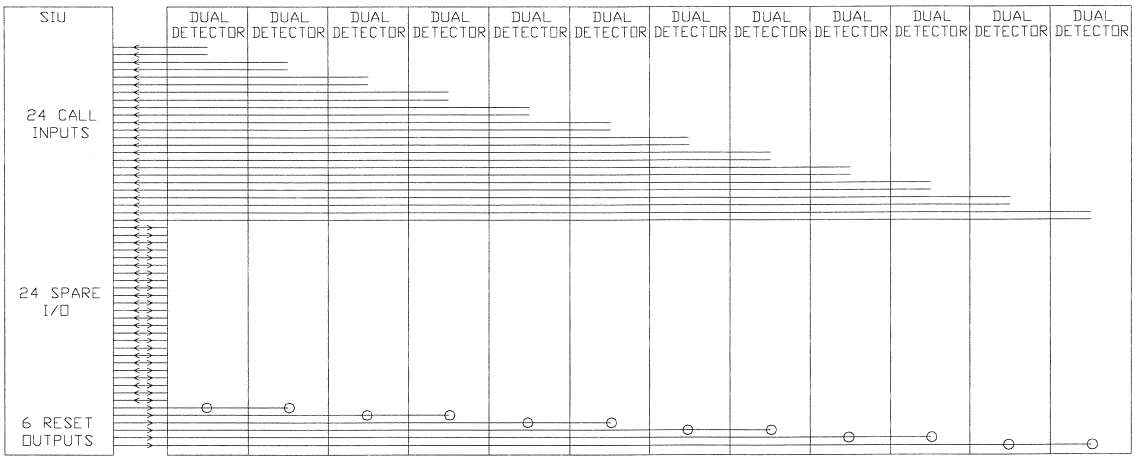

Figure 4
Legacy CALTRANS-style Detector Inputs/Outputs.

In Figure 5, twelve legacy CALTRANS-style detectors may be installed in the Input Assembly. The twenty-four CALLS must be read by twenty-four SIU inputs, while detectors must be able to be reset by six SIU outputs, two detectors at a time.

c. Existing NEMA-style Detectors.

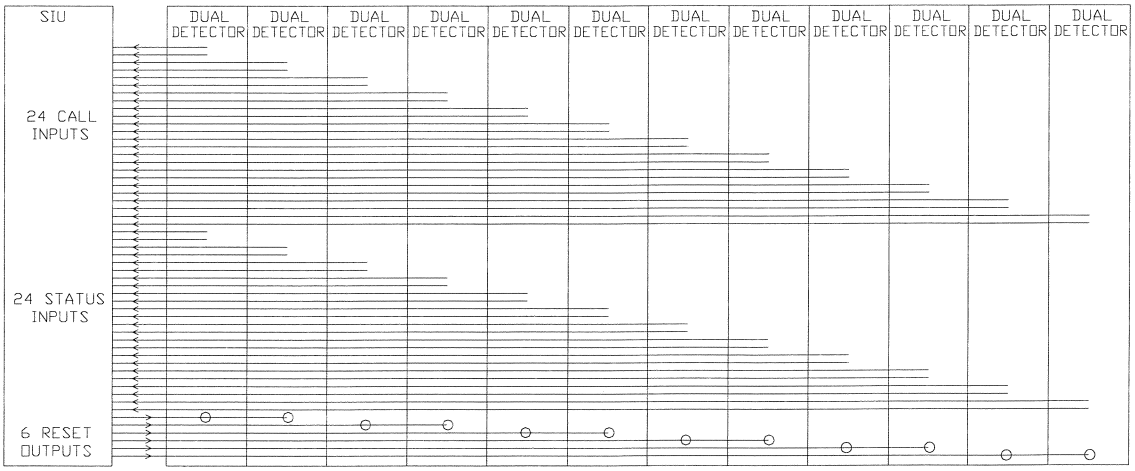

Figure 5
Legacy NEMA-style Detector Inputs/Outputs.

In Figure 6, twelve legacy NEMA detectors may be installed in the Input Assembly. The twenty-four CALLS must be read by twenty-four SIU inputs, while the twenty-four STATUS must be read by another twenty-four SIU inputs. The detectors must be able to be reset by six SIU outputs, two detectors at a time, same as NEMA.

d. Existing Detectors with Serial Ports.

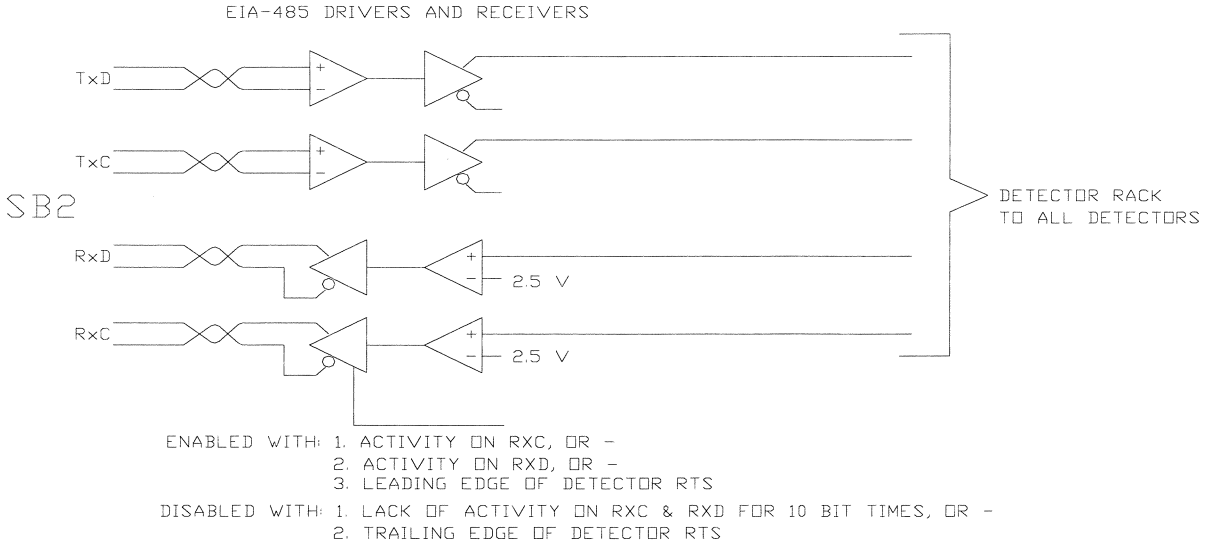

Figure 6
Legacy Detectors with Serial Ports Input/Output Connections

Circuitry shown in Figure 7 must be included in each SIU, providing a direct serial connection from the controller to each individual serial detector. This serial connection must be in addition to all of the NEMA CALL and STATUS lines shown in Figure 6.

e. Future Advanced Detectors.

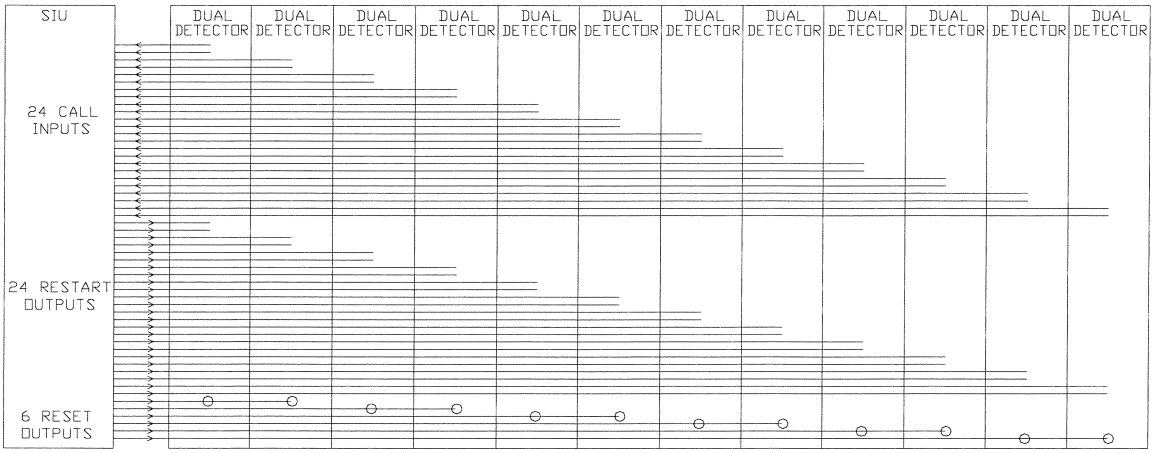

Figure 7
Future Advanced Detector Inputs/Outputs.

Status information must be retrieved from each detector via Serial Bus 2 as described in Figure 7, eliminating the need for the NEMA STATUS inputs. The NEMA STATUS inputs must become individual RESTART outputs from the SIU. The

RESET and RESTART outputs differ as follows. RESET must be connected directly to the microprocessor RESET pin of each detector, generating a "hard" reset, used as a last resort to recover stalled detectors. RESTART must be a "soft" signal to the detector to clear all tuning and programming for that individual detector channel, without affecting others.

f. Switch Packs.

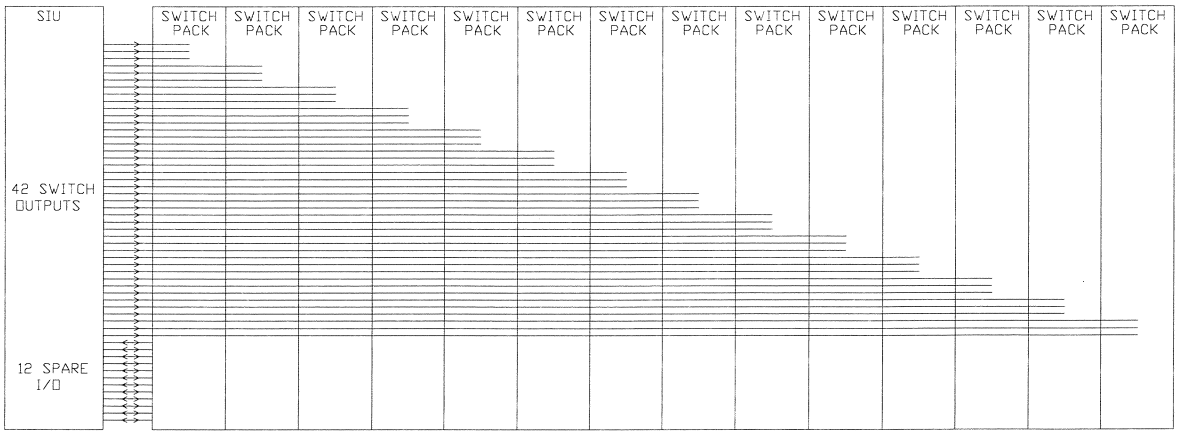

Figure 8
Switch Pack Outputs.

Figure 8, 42 SIU outputs must be used to control fourteen Switch Packs, with enough outputs remaining to control four more. Each output must be able to be read back by the controller.

H. Cabinet Details.

Table of Contents

Model 200 Switchpack & 204 Flasher Units	Figure 9
Model 212 Cabinet Monitor Unit (CMU)	Figure 10
Model 214 Auxiliary Monitor (AMU)	Figure 11
Model 216 ITS Cabinet Power Supply Unit	Figure 12
Model 216 EP Cabinet External Power Supply	Figure 13
Model 218 Serial Interface Unit (SIU)	Figure 14
Transfer Relay Wiring and Outline Dimension	Figure 15
Detector Sensor Units and Isolators	Figure 16

MODEL 200 SWITCH PACK & 204 FLASHER UNITS

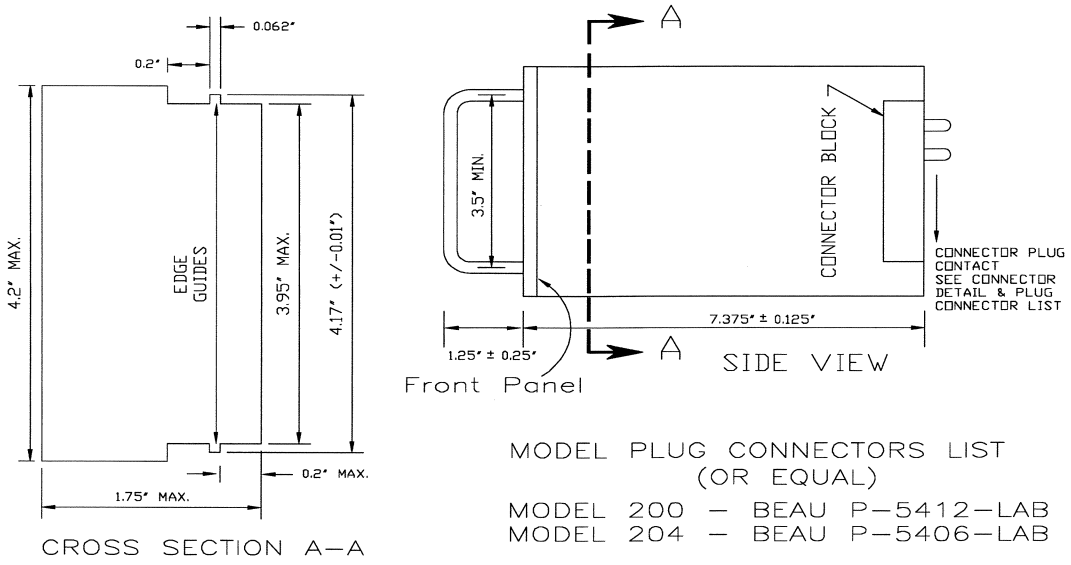

MODEL PLUG CONNECTORS LIST
(OR EQUAL)

MODEL 200 – BEAU P–5412–LAB
MODEL 204 – BEAU P–5406–LAB

MODEL 200, 204, CONNECTOR DETAIL

PIN	FUNCTION	PIN	FUNCTION
1	AC+	7	Load Circuit #1
2	Equip. Ground	8	Load Circuit #2
3	Red Output	9	Equip. Ground
4	Not Assigned	10	AC–
5	Yellow Output	11	AC+
6	Red Input	12	Not Assigned
7	Green Output		
8	Yellow Input		
9	+24 VDC		
10	Green Input		
11	AC–		
12	Not Assigned		

TITLE: MODEL 200 SWITCH PACK & 204 FLASHER UNITS

Rev Date 06-21-05 | 4–11–1

Figure 9
Model 200 Switchpack & 204 Flasher Units

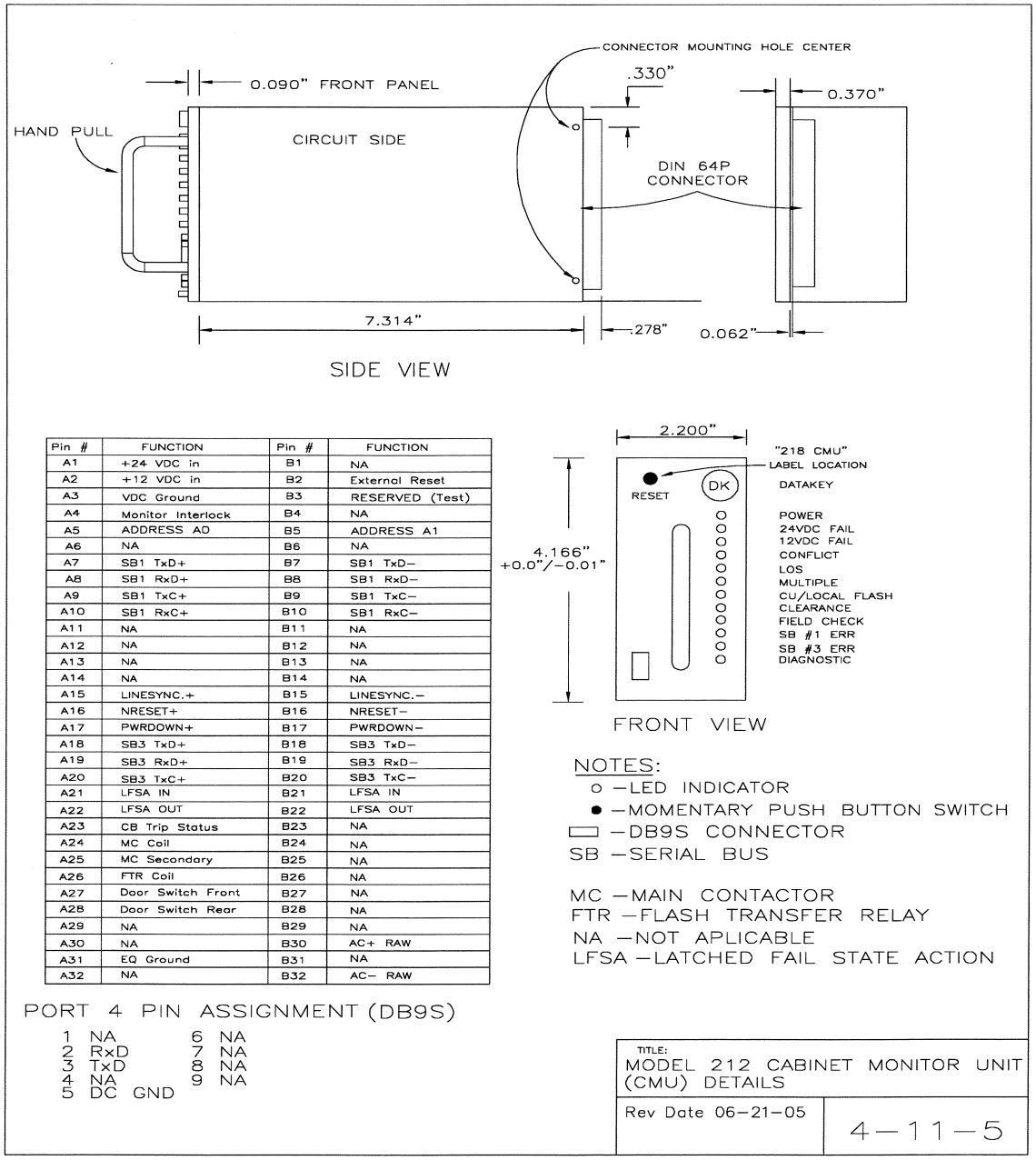

Pin #	FUNCTION	Pin #	FUNCTION
A1	+24 VDC in	B1	NA
A2	+12 VDC in	B2	External Reset
A3	VDC Ground	B3	RESERVED (Test)
A4	Monitor Interlock	B4	NA
A5	ADDRESS A0	B5	ADDRESS A1
A6	NA	B6	NA
A7	SB1 TxD+	B7	SB1 TxD-
A8	SB1 RxD+	B8	SB1 RxD-
A9	SB1 TxC+	B9	SB1 TxC-
A10	SB1 RxC+	B10	SB1 RxC-
A11	NA	B11	NA
A12	NA	B12	NA
A13	NA	B13	NA
A14	NA	B14	NA
A15	LINESYNC.+	B15	LINESYNC.-
A16	NRESET+	B16	NRESET-
A17	PWRDOWN+	B17	PWRDOWN-
A18	SB3 TxD+	B18	SB3 TxD-
A19	SB3 RxD+	B19	SB3 RxD-
A20	SB3 TxC+	B20	SB3 TxC-
A21	LFSA IN	B21	LFSA IN
A22	LFSA OUT	B22	LFSA OUT
A23	CB Trip Status	B23	NA
A24	MC Coil	B24	NA
A25	MC Secondary	B25	NA
A26	FTR Coil	B26	NA
A27	Door Switch Front	B27	NA
A28	Door Switch Rear	B28	NA
A29	NA	B29	NA
A30	NA	B30	AC+ RAW
A31	EQ Ground	B31	NA
A32	NA	B32	AC- RAW

Figure 10
Model 212 Cabinet Monitor Unit (CMU)

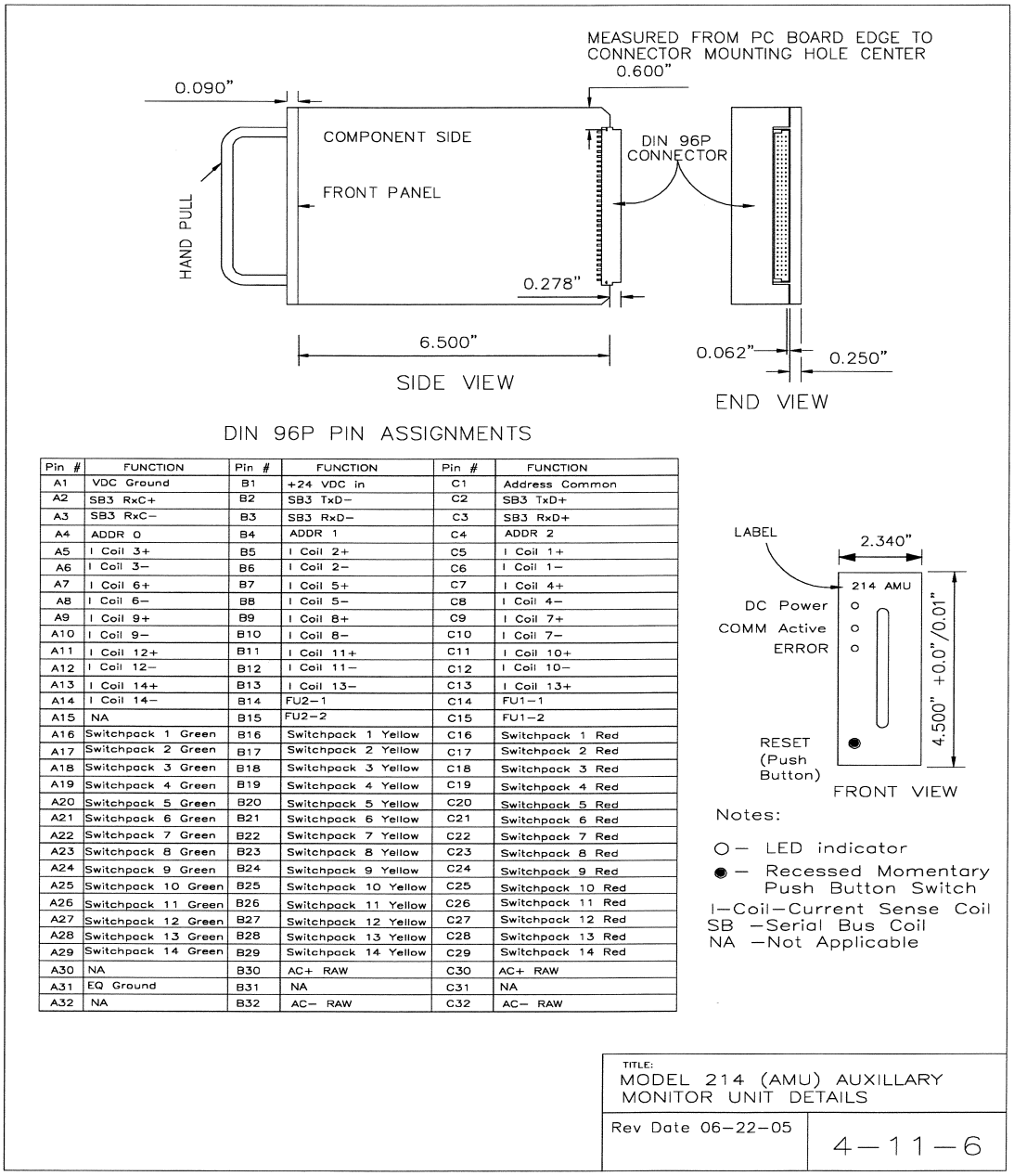

DIN 96P PIN ASSIGNMENTS

Pin #	FUNCTION	Pin #	FUNCTION	Pin #	FUNCTION
A1	VDC Ground	B1	+24 VDC in	C1	Address Common
A2	SB3 RxC+	B2	SB3 TxD–	C2	SB3 TxD+
A3	SB3 RxC–	B3	SB3 RxD–	C3	SB3 RxD+
A4	ADDR 0	B4	ADDR 1	C4	ADDR 2
A5	I Coil 3+	B5	I Coil 2+	C5	I Coil 1+
A6	I Coil 3–	B6	I Coil 2–	C6	I Coil 1–
A7	I Coil 6+	B7	I Coil 5+	C7	I Coil 4+
A8	I Coil 6–	B8	I Coil 5–	C8	I Coil 4–
A9	I Coil 9+	B9	I Coil 8+	C9	I Coil 7+
A10	I Coil 9–	B10	I Coil 8–	C10	I Coil 7–
A11	I Coil 12+	B11	I Coil 11+	C11	I Coil 10+
A12	I Coil 12–	B12	I Coil 11–	C12	I Coil 10–
A13	I Coil 14+	B13	I Coil 13–	C13	I Coil 13+
A14	I Coil 14–	B14	FU2–1	C14	FU1–1
A15	NA	B15	FU2–2	C15	FU1–2
A16	Switchpack 1 Green	B16	Switchpack 1 Yellow	C16	Switchpack 1 Red
A17	Switchpack 2 Green	B17	Switchpack 2 Yellow	C17	Switchpack 2 Red
A18	Switchpack 3 Green	B18	Switchpack 3 Yellow	C18	Switchpack 3 Red
A19	Switchpack 4 Green	B19	Switchpack 4 Yellow	C19	Switchpack 4 Red
A20	Switchpack 5 Green	B20	Switchpack 5 Yellow	C20	Switchpack 5 Red
A21	Switchpack 6 Green	B21	Switchpack 6 Yellow	C21	Switchpack 6 Red
A22	Switchpack 7 Green	B22	Switchpack 7 Yellow	C22	Switchpack 7 Red
A23	Switchpack 8 Green	B23	Switchpack 8 Yellow	C23	Switchpack 8 Red
A24	Switchpack 9 Green	B24	Switchpack 9 Yellow	C24	Switchpack 9 Red
A25	Switchpack 10 Green	B25	Switchpack 10 Yellow	C25	Switchpack 10 Red
A26	Switchpack 11 Green	B26	Switchpack 11 Yellow	C26	Switchpack 11 Red
A27	Switchpack 12 Green	B27	Switchpack 12 Yellow	C27	Switchpack 12 Red
A28	Switchpack 13 Green	B28	Switchpack 13 Yellow	C28	Switchpack 13 Red
A29	Switchpack 14 Green	B29	Switchpack 14 Yellow	C29	Switchpack 14 Red
A30	NA	B30	AC+ RAW	C30	AC+ RAW
A31	EQ Ground	B31	NA	C31	NA
A32	NA	B32	AC– RAW	C32	AC– RAW

Figure 11
Model 214 Auxiliary Monitor (AMU)

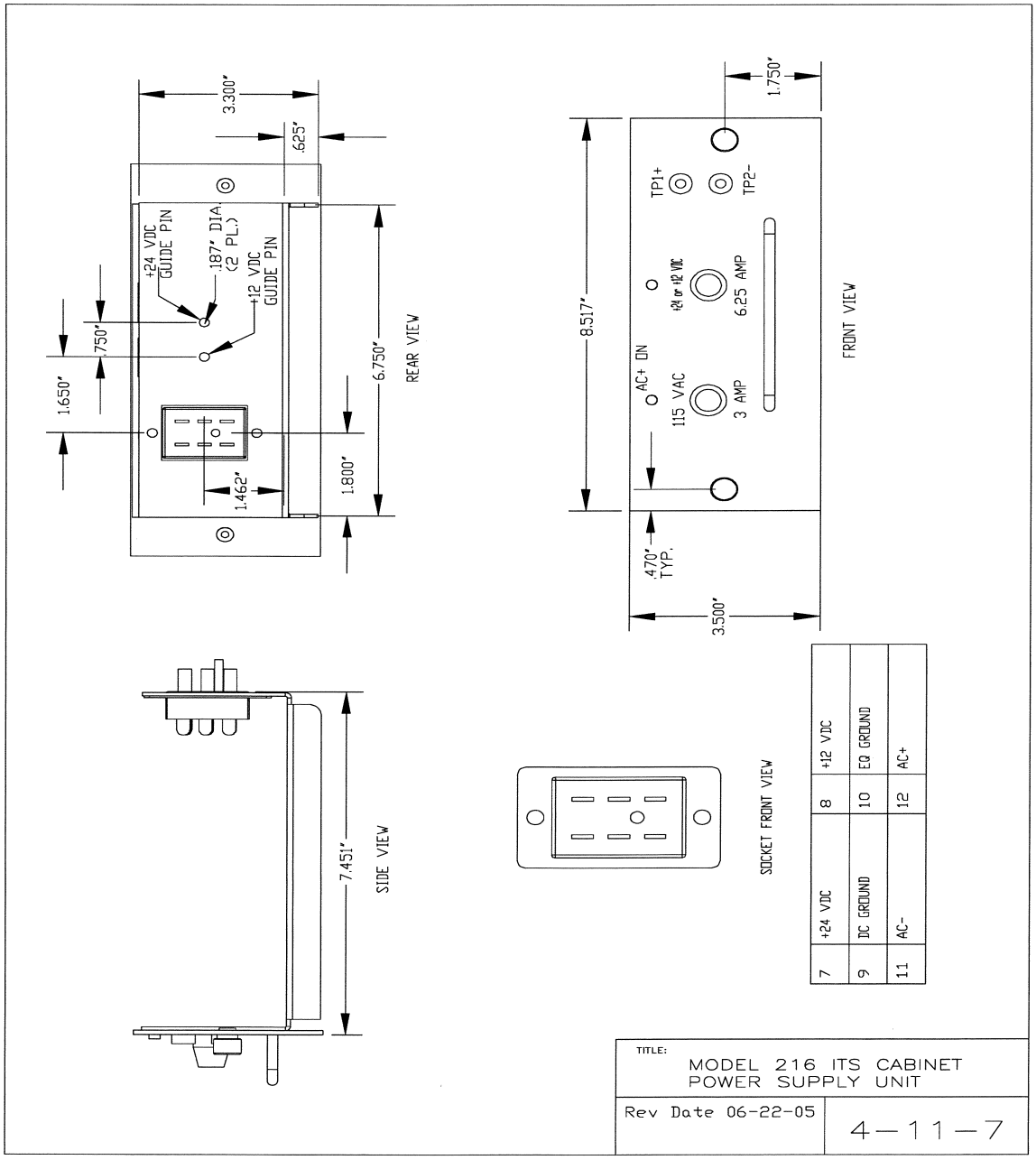

Figure 12
Model 216 ITS Cabinet Power Supply Unit

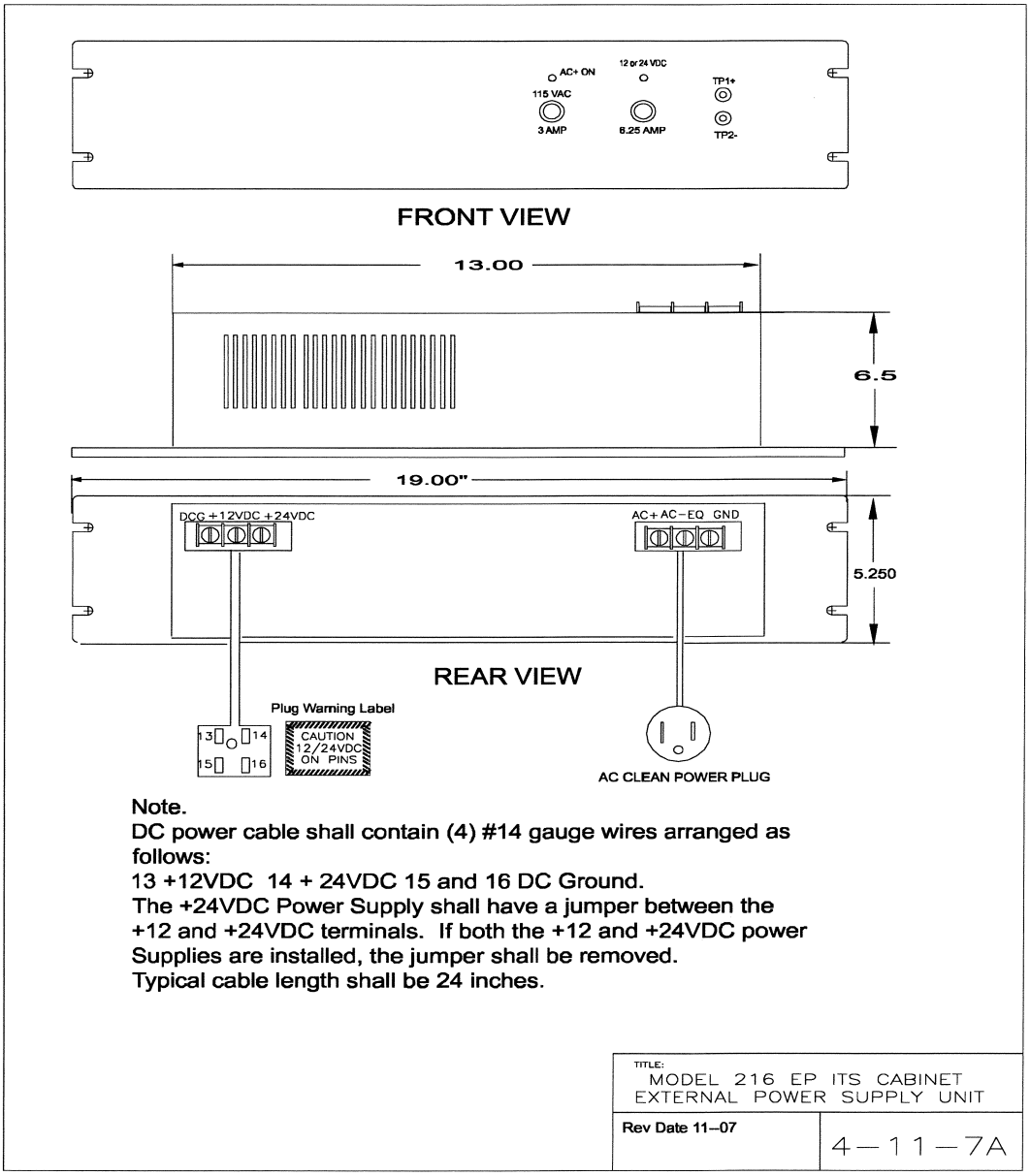

Figure 13
Model 216 EP Cabinet External Power Supply

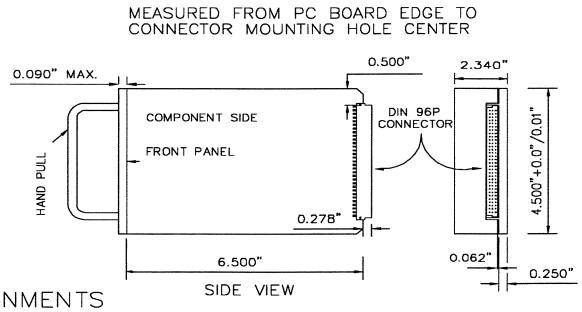

SIU PIN ASSIGNMENTS

PIN	SIU ROW A	SIU ROW B	SIU ROW C
1	+24 VDC in	+24 VDC in	I/O 47
2	I/O 0	I/O 1	I/O 48
3	I/O 2	I/O 3	I/O 49
4	I/O 4	I/O 5	I/O 50
5	I/O 6	I/O 7	I/O 51
6	I/O 8	I/O 9	I/O 52
7	I/O 10	I/O 11	I/O 53
8	I/O 12	I/O 13	SB1 TxD +
9	I/O 14	I/O 15	SB1 TxD −
10	I/O 16	I/O 17	SB1 RxD +
11	I/O 18	I/O 19	SB1 RxD −
12	I/O 20	I/O 21	SB1 TxC +
13	I/O 22	I/O 23	SB1 TxC −
14	I/O 24	I/O 25	SB1 RxC +
15	I/O 26	I/O 27	SB1 RxC −
16	I/O 28	I/O 29	LINE SYNC. +
17	I/O 30	I/O 31	LINE SYNC. −
18	I/O 32	I/O 33	N RESET +
19	I/O 34	I/O 35	N RESET −
20	I/O 36	I/O 37	ASSEMBLY ADDR (*)
21	I/O 38	I/O 39	INBUS RTS
22	I/O 40	I/O 41	SB2 TxD +
23	I/O 42	I/O 43	SB2 TxD −
24	I/O 44	I/O 45	SB2 RxD +
25	I/O 46	Opto Input 1	SB2 RxD −
26	Opto Input 2	Opto Input 3	SB2 TxC +
27	Opto Input 4	Opto Input Ground	SB2 TxC −
28	Address−0	Address−1	SB2 RxC +
29	Address−2	Address−3	SB2 RxC −
30	INBUS TxD	INBUS RxD	INBUS TxC
31	Equipment Ground	AC Line Reference (2)	INBUS RxC
32	24 VDC Ground	24 VDC Ground	SIU/Enable (3)

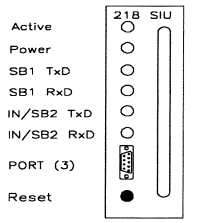

FRONT VIEW

Port 3 Pin Assignments (DB9S)

1	NA	6	NA
2	RXD	7	NA
3	TXD	8	NA
4	NA	9	NA
5	DC Ground		

NOTES:

1 ○ LED Indicator
● Recessed Momentary Push Button
DB9S Connector
NA Not Applicable
2 NA for ITS Cabinet Standard
3 24VDC Ground for SIU application

TITLE: MODEL 218 (SIU) SERIAL INTERFACE UNIT DETAILS

Rev Date 06−22−05

4−11−8

Figure 14
Model 218 Serial Interface Unit (SIU)

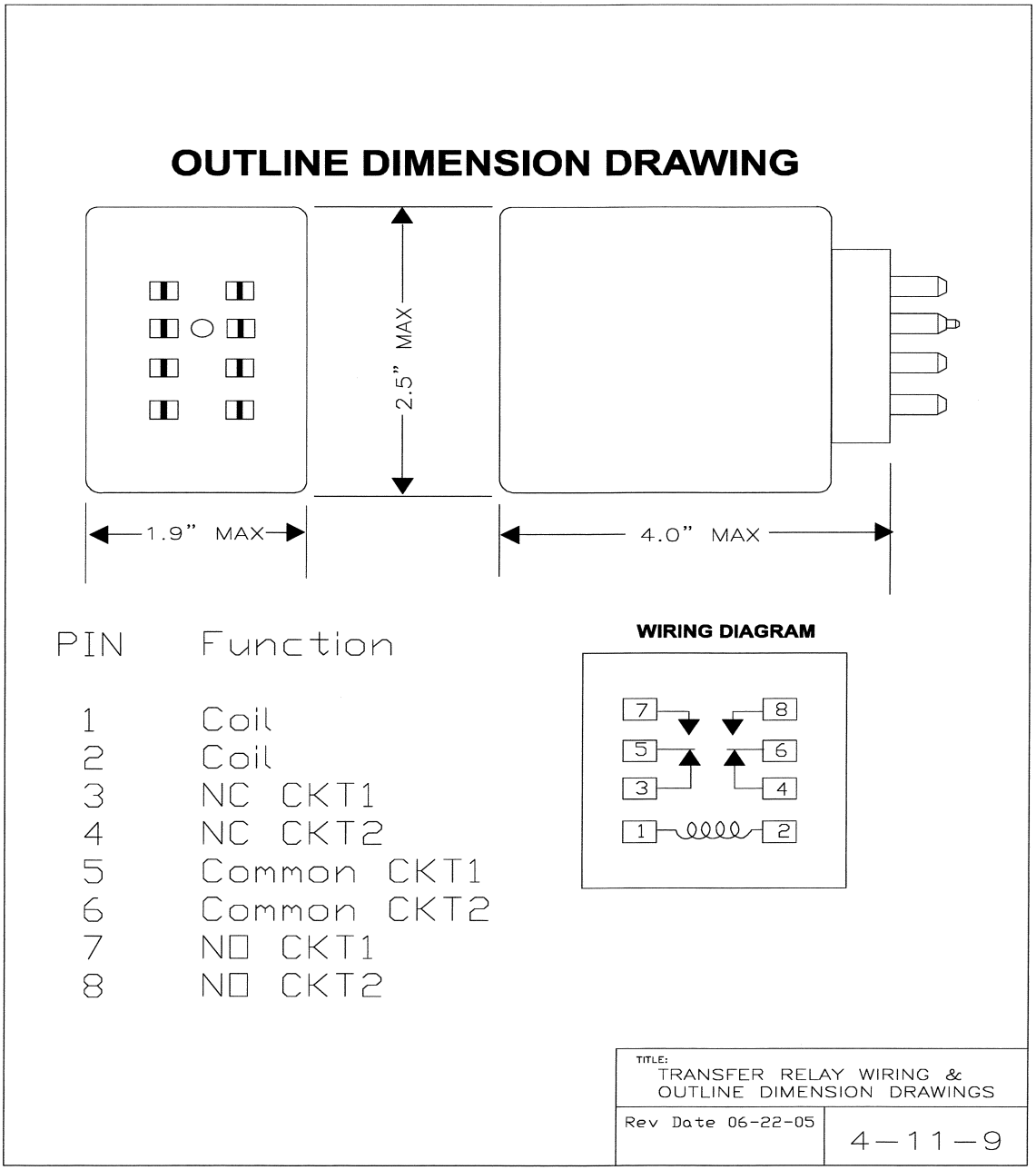

Figure 15
Transfer Relay Wiring and Outline Dimension

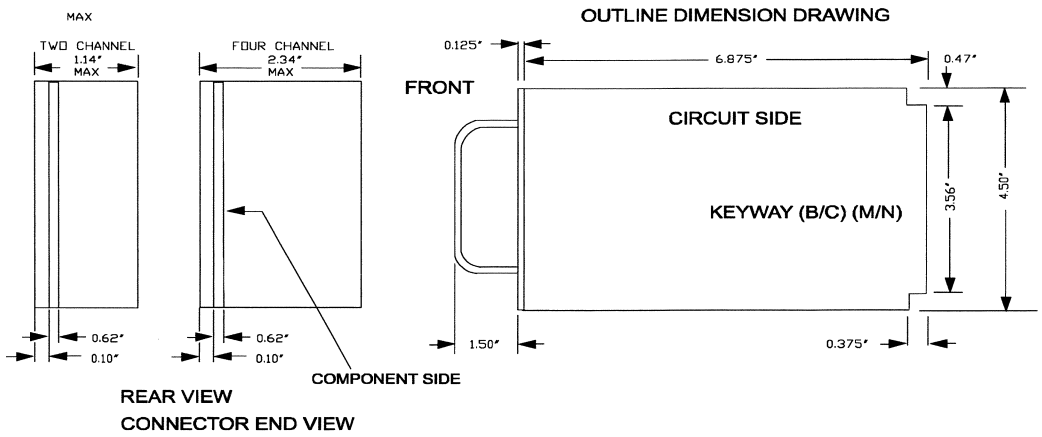

DETECTOR SENSOR UNIT PIN ASSIGNMENTS

1	Assembly Address*	A	DC GND
2	Inbus RTS*	B	DC+
3	Slot Address 3*	C	DET RESET
4	IN 1+	D	IN 1+
5	IN 1−	E	IN 1−
6	Slot Address 0*	F	OUT1 (C)
7	Channel 1 Restart*	H	OUT1 (E)
8	IN 2+	J	IN 2+
9	IN 2−	K	IN 2−
10	Slot Address 1*	L	EQ GND
11	AC−	M	AC−
12	AC+	N	AC+
13	IN 3+	P	IN 3+
14	IN 3−	R	IN 3−
15	Slot Address 2*	S	OUT3 (C)
16	Channel 3 Restart*	T	OUT3 (E)
17	IN 4+	U	IN 4+
18	IN 4−	V	IN 4−
19	Inbus TX Data*	W	OUT2 (C)
20	Channel 2 Restart*	X	OUT2 (E)
21	Inbus RX Data*	Y	OUT4 (C)
22	Channel 4 Restart*	Z	OUT4 (E)

* Future Use

ISOLATOR PIN ASSIGNMENTS

1	N/A	A	DC GND
2	N/A	B	DC+
3	N/A	C	N/A
4	IN 1+*	D	IN 1+
5	IN 1−*	E	IN 1−
6	N/A	F	OUT1 (C)
7	N/A	H	OUT1 (E)
8	IN 2+*	J	IN 2+
9	IN 2−*	K	IN 2−
10	N/A	L	EQ GND
11	AC−*	M	AC−
12	AC+*	N	AC+
13	N/A	P	N/A
14	N/A	R	N/A
15	N/A	S	N/A
16	N/A	T	N/A
17	N/A	U	N/A
18	N/A	V	N/A
19	N/A	W	OUT2 (C)
20	N/A	X	OUT2 (E)
21	N/A	Y	N/A
22	N/A	Z	N/A

*Allowed but not required

TITLE: DETECTOR SENSOR UNITS & ISOLATORS DETAILS

Rev Date 06-21-05

4—11—10

Figure 16
Detector Sensor Units and Isolators

2.09 DETECTOR SENSOR UNITS, ELEMENTS AND ISOLATORS

A. General Requirements.

1. The sensor and isolator channels must be operationally independent from each other.

2. Each sensor unit or AC isolator channel must draw no more than 100 milliamperes from the +24 VDC cabinet power supply and must be insensitive to 700 millivolts RMS ripple on the incoming +24 VDC line.

3. The sensor unit or isolator front panel must be provided with a hand pull to facilitate insertion and removal from the Input Assembly.

4. All control switches, gain dials and channel indicators must be mounted on the front panel. Each sensor unit or isolator channel must have an indicator to provide visual indication of detector or incoming signal.

5. Each sensor unit or isolator channel output must be an opto-isolated NPN Open Collector capable of sinking 50 milliamperes at 30 VDC. The output must be compatible with the controller unit inputs.

6. A valid channel input must cause a channel Ground True Output to the controller unit of a minimum 100 milliseconds in duration. An onboard physical switching mechanism must be provided to disable this feature when the mechanism is in an OPEN position. Said switching mechanism must eliminate the minimum timing requirement.

7. The output transistor must switch from OFF to ON state or ON to OFF state in 20 microseconds or less.

8. Onboard protection must be provided to enable the sensor unit or isolator to comply with ANSI/IEEE C62.41 (100 Kilohertz Ring Wave and the EFT Burst) at voltages and currents specified at "Location Category A1" (i.e. up to 2.0 Kilovolts, 0.07 Kiloampheres for the 100 Kilohertz Ring Wave) and at "Test Severity" level I (i.e. up to 1.0 Kilovolts, open-circuit) for the EFT Burst.

9. Detector Sensor Units and Isolators must have a front panel mounted test switch for each channel to simulate valid input. The test switch must be a single-pole double-throw, three position CONTROL test switch: The position assignment must be UP = Constant ON; MIDDLE = Normal Operation; and DOWN = Momentary ON.

B. Model 222 & 224 Loop Detector Sensor Unit.

1. General Requirements.

a. The sensor unit channel must produce an output signal when a vehicle passes over or remains over loop wires embedded in the roadway. The method of detection must be based upon a design that renders the output signal when a metallic mass (vehicle)

enters the detection zone causing a change of 0.02% minimum decrease in inductance of the circuit measured at the input terminals of the sensor unit.

b. An open loop must cause the sensor unit channel to output a signal indicating a non-detect situation.

c. Each sensor unit channel must be capable of detecting all types of licensed motor vehicles when connected to the loop configuration/lead-in requirements.

d. The sensor unit must comply with all performance requirements when connected to an inductance (loop plus lead-in) from 50 to 700 micro Henries with a Q-parameter as low as 5 at the sensor unit operating frequency.

e. Loop inputs to each channel must be transformer isolated.

f. Each individual channel must have a minimum of 4 switch selectable operating frequencies.

g. The sensor unit channel tuning circuits must be automatic and must be so designed that drift caused by environmental changes or changes in applied power must not cause an actuation.

h. A switch or switch position must be provided on the front panel to disable each channel output.

2. Mode Selection Requirements. Each sensor unit channel must have PULSE and PRESENCE selectable modes.

a. Pulse Mode.

(1) In the PULSE MODE, each new vehicle presence within the detection zone must initiate a sensor unit channel output pulse of 125 milliseconds (+/-25 milliseconds) in duration.

(2) Should a vehicle remain in a portion of the detection zone for a period in excess of 2 seconds, the sensor unit channel must automatically "tune out" the presence of said vehicle. The sensor unit channel must then be capable of detecting another vehicle entering the same detection zone. The recovery time to full sensitivity between the first vehicle pulse and channel capability to detect another vehicle must be 3 seconds maximum.

b. Presence Mode.

(1) In the PRESENCE MODE, the sensor unit channel must recover to normal sensitivity within 1 second after termination of vehicle presence in the detection zone regardless of the duration of the presence.

(2) The channel sensitivity settings must provide presence detection of a vehicle in the detection zone for a specified time period and inductance change(s). The conditions are as follows:

	MINIMUM TIME DURATION IN MINUTES	*DETECTOR INPUT INDUCTANCE CHANGE*
SETTING 6	3	0.02% or more
	10	0.06% or more
SETTING 2	4	1.00% or more

3. Sensitivity.

a. This section and included subsections contain example inductive loop detector configurations with which Loop Detector Sensor Units must properly function. Reference is made to California Standard Plan ES-5A & B Loop Configurations described in the California Department of Transportation Standard Plans. The configurations described herein are meant to be representative examples of inductive loop detector configurations.

(1) Single Type A, B, Q or Round Loop with a 250 foot lead-in cable.

(2) Single Type A, B, Q or Round Loop with a 1000 foot lead-in cable.

(3) 4 Type A, B, or Q Loops connected in series/parallel with a 250 foot lead-in cable.

(4) 4 Type A, B, Q or Round Loops connected in series with a 1000 foot lead-in cable.

(5) One 50 foot Type C Loop with a 250 foot lead-in cable.

b. Each sensor unit channel must be equipped with 7 selectable sensitivity setting(s) in presence and pulse modes to accomplish the following under operational and environmental requirements of this specification:

(1) Each sensor unit channel must respond while in Setting 2 to a nominal change in inductance between 0.15% to 0.4% (median sensitivity of 0.32%) while connected to the loop configurations described in this specification.

(2) Each sensor unit channel must respond while in Setting 6 to an inductance of 0.02% while connected to the loop configurations described in this specification.

(3) All sensitivity settings must not differ +/-40% from the nominal value chosen.

(4) Each sensor unit channel must not detect vehicles, moving or stopped, at distances of 3 feet or more from any loop perimeter, in all configurations listed in this specification.

4. Response Time. Response time of the sensor unit channel for Sensitivity Setting 2 must be less than 5 +/-1 millisecond at an approximate loop frequency of 40 Kilohertz. That is, for any decreased inductive change that exceeds its sensitivity threshold, the channel must output a ground true logic level within 5 millisecond (+/-1 millisecond). When such change is removed, the output must become an open circuit within 5 millisecond (+/-1 millisecond).

5. Beginning of Normal Operation. The sensor unit channels must begin normal operation within 2 seconds after the application of power or after a reset signal of 30 microseconds.

6. Tracking Rate. The sensor unit must be capable of compensating or tracking for an environmental change up to 0.001% change in inductance per second.

7. Tracking Range.

   a. The sensor unit must be capable of normal operation as the input inductance is changed from +/-5.0% from the quiescent tuning point regardless of internal circuit drift.

   b. The sensor unit must be capable of normal operation as the input resistance is changed from +/-0.5% from the quiescent tuning point regardless of internal circuit drift.

8. Temperature Change. The operation of the sensor unit must not be affected by changes in the inductance and/or capacitance of the loop caused by environmental changes, with the rate of temperature change not exceeding 1 degree C per 3 minutes. The opening or closing of the controller cabinet door with a temperature differential of up to 18 degrees C between the inside and outside air must not affect the proper operation of the sensor unit.

C. Magnetic Detector Requirements.

1. The Model 232 Two-Channel Magnetic Detector Sensor Unit must provide 2 channels of detection. When resident in an energized cabinet Input Assembly, and each channel connected to its associated Model 231 Magnetic Detector Sensing Element(s), the channel must produce a continuous output signal to the controller unit when a voltage is induced in the sensing element by a vehicle passing over the sensing element.

2. Each channel must detect vehicles passing within 6 feet of the Model 231 Sensing Element with 1000 feet of lead-in cable, at all speeds between 3 and 80 miles per hour.

3. A single control knob for adjusting the sensitivity of each channel must be mounted on the front panel and must be readily adjustable without the use of tools.

4. A momentary switch or switch position must be provided to place a call on each channel, on an individual basis.

D. Model 242 Two-Channel DC Isolator.

1. General Requirements.

a. The Model 242 Two-Channel DC Isolator must contain 2 isolation channels which provide isolation between electrical contacts external to the module and the controller unit input. The method of isolation must be based upon a design which must provide reliable operation.

b. The isolator must have an internal power supply supplying 20 VDC (+/-4 VDC) to the field input side of the isolation channels. The isolator must not draw more than 2.5 Watts of AC power. No current must be drawn from the cabinet power supply.

c. A channel contact closure input of 5 milliseconds or less must not cause an output (ground true) to the controller. An input of 25 milliseconds or greater must cause an output to the controller. An input of duration between 5 and 25 milliseconds may or may not cause an output to the controller. The channel circuitry must be able to react to a new input closure within 25 milliseconds of an input opening.

d. Each isolation channel field input must be turned ON (TRUE) when a contact closure causes an input voltage of less than 8 VDC, and must be turned OFF (FALSE) when the contact opening causes the input voltage to exceed 12 VDC. Each input must deliver no less than 15 milliamperes, nor more than 40 milliamperes, to an electrical contact closure or short from the power supply.

E. Model 252 Two-Channel AC Isolator.

1. General Requirements.

a. The Model 252 Two-Channel AC Isolator must contain 2 isolation channels which provide isolation between external 120 VAC input circuits and the controller unit input circuits. The method of isolation must be based upon a design that provides reliable operation.

b. A channel input voltage "Von" of 80 VAC (+/-5 VAC) applied for a minimum duration of 120 milliseconds (+/-10 milliseconds) must cause an output (Ground True) to the controller unit.

c. A channel input voltage "Voff" (Von minus 10 VAC) applied for a minimum duration of 120 milliseconds (+/-10 milliseconds) must cause an output (Ground False) to the controller unit.

d. A two-post jumper must be provided to select inverted output states for Von and Voff. When in CLOSED position (Grounded), Von must cause a Ground False output. An indicator must be provided on the front panel labeled 'RR" which must indicate a Voff input, Ground True output.

e. The input impedance of each channel must be between 6,000 - 15,000 Ohms at 60 Hertz.

f. The minimum isolation must be 1000 Megohms between the input and output terminals at 500 AC applied voltage.

2.10CABINET SYSTEM REQUIREMENTS

A. General.

1. The Intelligent Transportation System (ITS) Serial Interconnected Cabinet Family is a group of cabinets designed to fulfill a variety of applications. This chapter describes the functional and physical requirements of said cabinets.

2. There are common parts to all cabinets, such as Modular Bus and Power Assemblies, ATC Controller Unit, Power Distribution Assembly (PDA ITS), Input and Output Assemblies and Service Assemblies.

3. The ATC Controller Unit is serially connected to the Cabinet via two serial synchronous ports located at the Field I/O C12 Connector or the CPU-1B C13 Connector (Serial Bus 1 only). These two communication links use EIA-485 Drivers/Receivers and Synchronous Data Link Control (SDLC) Protocol to interface with Serial Bus #1 and #2.

B. Cabinet Model Number and Consistency.

1. The ITS Cabinets must consist of a package of items needed to carry out a specific Application. Cabinet Versions provided here are EXAMPLES of possible cabinet configurations. A Product Implementation Conformance Statement is provided as an Annex to this standard:

Cabinet Traffic Signal Application - Series 340
340 - 4 Door Cabinet with "P" Base Ground Mount
342 - 2 Door Cabinet with "170" Base Ground Mount
346 - 2 Door Cabinet with "170" Base, Adaptor Mount

Cabinet Traffic Management Application - Series 350
354 - 2 Door Cabinet with "170" Base Ground Mount
356 - 2 Door Cabinet with "170" Base Adaptor Mount

Table 2
Example Cabinet Configurations

	Package Items	340	342	346	Drawings
1	Housing #1 /Cage #1	-	1	-	6-5-4
2	Housing #2 /Cage #2	-	-	1	6-5-4
3	Housing #3 (2) Cage #1	1	-	-	6-5-4
4	"J" Panel Cage #1	4	2	-	6-5-8
5	"J" Panel Cage #2	-	-	2	6-5-9
6	Service Panel Assembly w/ AC/EG Bus	1	1	1	6-5-11
7	Raw/Clean AC Power Assembly 2 socket	1	1	1	6-5-15A
8	Raw/Clean AC Power Assembly 4 socket	-	-	-	6-5-15
9	Raw/Clean AC Power Extension	-	-	-	6-5-15
10	AC Clean Module Assembly	1	-	-	6-5-14
11	DC Power/ COMM Assembly	2	1	-	6-5-17
12	DC Power/ COMM Extension	-	-	-	6-5-17
13	Cabinet Shelf Assembly	-	-	-	6-5-10
14	Drawer Assembly	2	1	1	6-5-10
15	Input Assembly**	3	2	1	6-5-35/38
16	Service Assembly***	1	1	1	Figure 62,63
17	Six Pack Output Assembly**	1	1	-	6-5-23/28
18	Fourteen Pack Output Assembly**	1	1	1	6-5-23/28
19	PDA5 IP w 12 and 24V DC Power Supplies	-	-	-	6-5-19
20	PDA 5 EP with rack mount power supply	1	1	1	6-5-19A
21	Rack Mount 24V Power Supply	1	1	1	4-11-7A
22	Rack Mount 12V Power Supply	1	-	-	4-11-7A
23	Fiber Optic Termination Panel	1	1	1	6-5-42
24	Input Terminal Panel (Optional 342*)	-	*	-	6-5-13
25	Manual Advance Pushbutton Cable	1	1	1	6-5-32
26	Field Input Panel with Mounting Brackets	2	-	-	FIGURE 21A, 21I
27	Field Output Panel with Mounting Brackets	2	-	-	FIGURE 21E, 21I

**Field Wire Support Bracket required with each Assembly

*** Service Assembly to be rack mounted below output file(s)

Special Equipment and Materials

Provide each major assembly with the following:

14 Pack Output Assembly:

(14) Model 200 Switch Pack Units

(6) Model 205 Flash Transfer Relay Unit (FTRs) (these relays must be designed for continuous operation in the energized position)

(12) Red Flash Program Blocks

(4) White Flash Program Blocks

(1) Type 218 Serial Interface Unit

(1) Type 214 Auxiliary Monitor Unit

(1) Serial Bus 3 cable

(1) Control Serial Bus (SB1/SB2) Cable

(1) Address Block (Output Assembly)

6 Pack Output Assembly:

(6) Model 200 Switch Pack Units

(3) Model 205 Flash Transfer Relay Unit (FTRs) (these relays must be designed for continuous operation in the energized position)

(6) Red Flash Program Blocks

(2) White Flash Program Blocks

(1) Type 218 Serial Interface Unit

(1) Type 214 Auxiliary Monitor Unit

(1) Serial Bus 3 cable

(1) Control Serial Bus (SB1/SB2) Cable

(1) Address Block (Output Assembly)

Input Assembly Number One (1):

(4) Type 222 – Loop Detector Sensors Unit

(2) Type 242 Two Channel DC Isolator Units

(2) Type 252 Two Channel AC Isolator Units

(1) Type 218 Serial Interface Unit

(1) Address Block (Input Assembly)

(1) Control Serial Bus (SB1/SB2) Cable

Input Assembly Number Two (2):

(4) Type 222 – Loop Detector Sensors Unit

(2) Type 242 Two Channel DC Isolator Units

(1) Type 218 Serial Interface Unit

(1) Address Block (Input Assembly)

(1) Control Serial Bus (SB1/SB2) Cable

Input Assembly Number Three (3):

(1) Type 218 Serial Interface Unit

(1) Address Block (Input Assembly)

(1) Control Serial Bus (SB1/SB2) Cable

Power Distribution Assembly must be PDA #5 EP with:

(1) Rack Mountable Model 216-24 Power Supply (pins 13 and 14 jumpered at supply terminal for single unit assembly)

(2) Model 204 Flasher Units

(1) Model 212 Cabinet Monitor Unit w/ 2 program keys

(1) Address Block (CMU)

(1) CC Harness

(1) Serial bus 3 Cable

(1) DC Power Harness (DCP)

(1) Control Serial Bus (SB1/SB2) Cable

Power Distribution Assembly must be PDA #5 IP with:

(1) Model 216-24 Power Supply

(1) Model 216-12 Power Supply

(2) Model 204 Flasher Units

(1) Model 212 Cabinet Monitor Unit w/ 2 program keys

(1) Address Block (CMU)

(1) CC Harness

(1) Serial bus 3 Cable

(1) DC Power Harness (DCP)

(1) Control Serial Bus (SB1/SB2) Cable

Service Panel Assembly:

(1) EDCO SHA-1250, or approved equal

Service Assembly:

(3) Type 218 Serial Interface Units

(3) Type 214 Auxiliary Monitor Units

(1) Model 212 Cabinet Monitor Unit

Field Wire Support Brackets.

Cage 1 units require one deep support bracket for each Input and Output Assembly if field panels are not supplied.

Cage 2 Units require one shallow support for each Input and Output Assembly.

Hardwire Copper Interface

Cabinets shall be wired to accept and implement 120 volt hardwire interconnect systems.

Standard color sequence for wires in positions 1-8 shall be:

White / Blue / Red / Green / Yellow / Black / White Black/ Blue Black

Install two (2) 8-position slider link blocks labeled SB1, 1-8 and SB2, 1-8 rated (250V / 20 amps) on the J-Panel.

Install one (1) 8-position fuse block labeled FB, 1-8 rated (250V / 20 amps) with 8-3amp AGU fuses (250V) on the J-Panel adjacent to SB1 and SB2.

Input file connections will be performed in the field.

Install #12 AWG jumpers between line side of FB1 to line side of SB1 corresponding terminals 1 through 8. Jumper wires shall be identified according to the standard color sequence.

All labels shall be machine printed, clearly readable, and of material that shall resist fading, cracking, discoloration, or detaching with age.

Series 340 Cabinet (Housing 3) must be provided with the following:

Two (2) Field Input Termination Panels in accordance with Drawings and mounted at the bottom of the rack. They must be attached to the rack with an angle bracket and each panel attached to the angle bracket with captive thumb-screws. A total of twenty four (24) EDCO MRA–6lC–6.

Two (2) Field Output Termination Panels in accordance with Drawings and be mounted at the bottom of the rack. They must be attached to the rack with an angle bracket and each panel attached to the angle bracket with captive thumb-screws as shown in the drawings.

2. Cabinet Cage Configuration Drawings.

Model 340 Cage 1 (Dual) Assembly Requirements	Figure 17
Model 340 Cage 1 Input w/ Controller Drawer Assy (Dual) Assy Requirement	Figure 18
Model 340 Cage 1 Outputs (Dual) Assembly Requirements	Figure 19
Model 340 Cage 1 Outputs w/ Controller Drawer Assy (Dual) Assy Reqments	Figure 20
Model 340 Cages (Dual) Cable Assembly Requirements	Figure 21
Field Input Panel	Figure 21A
Input Assembly Assignment to Field Panels	Figure 21B
Field Input Panel #1 Terminal and Labeling	Figure 21C
Field Input Panel #2 Terminal and Labeling	Figure 21D
Field Output Panel	Figure 21E
14 and 6 Pack Serial Output Assembly Wiring Assignment	Figure 21F
Field Output Wiring Diagram Output Files Phases 1 Thru 7	Figure 21G
Field Output Wiring Diagram Output Files Phases 8 Thru 14	Figure 21H

Termination Angle Brackets Figure 21I

Model 342 Cage 1 Assembly Requirements Figure 22

Cage 2 Assembly – Modified Drawer Loc. Figure 23

Model 354 Cage 1 Assembly Requirements Figure 24

Model 356 Cage 2 Assembly Requirements Figure 25

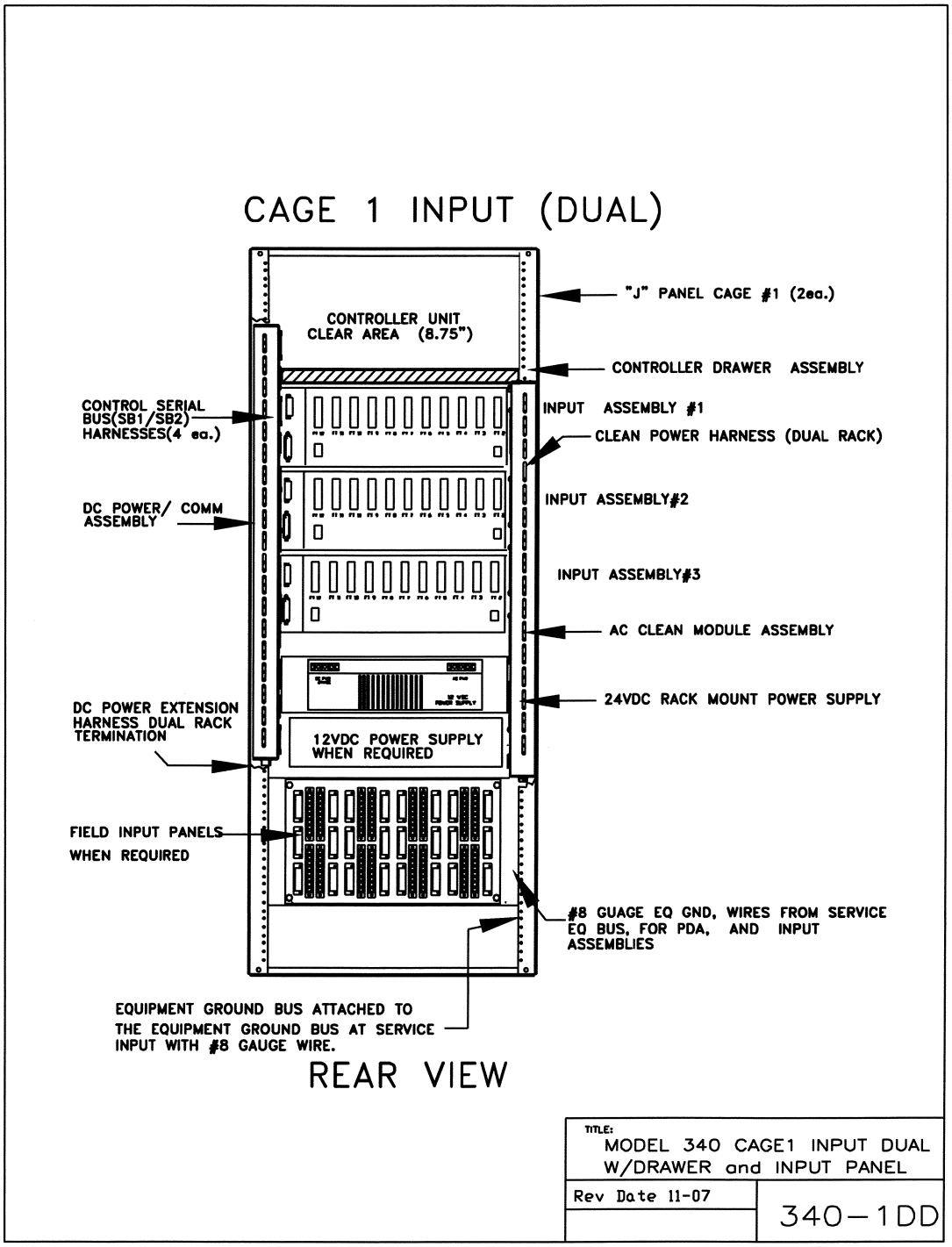

Figure 17
Model 340 Cage 1 (Dual) Assembly Requirements

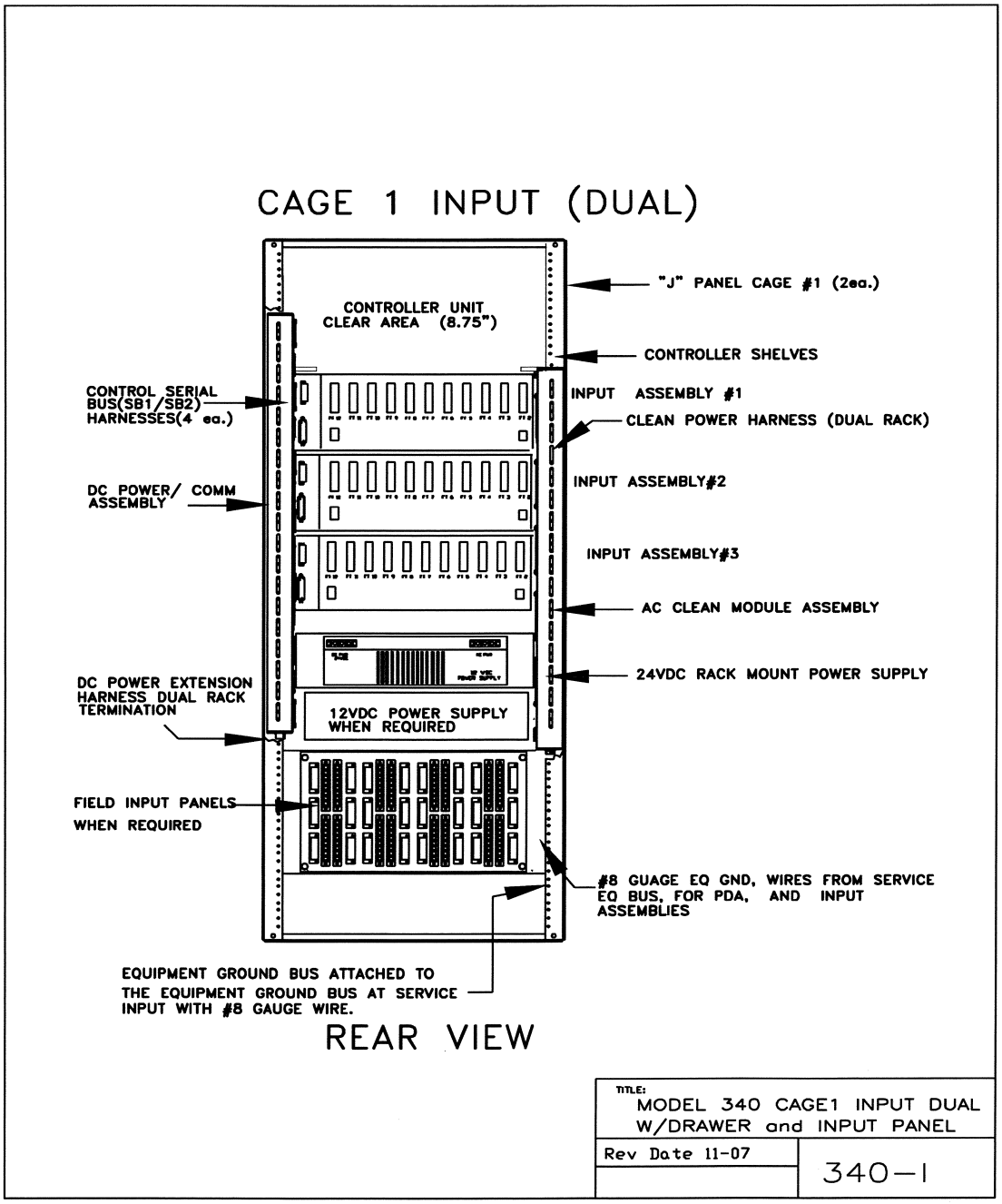

Figure 18
Model 340 Cage 1 Input w/ Controller Drawer Assy (Dual) Assy Requirements

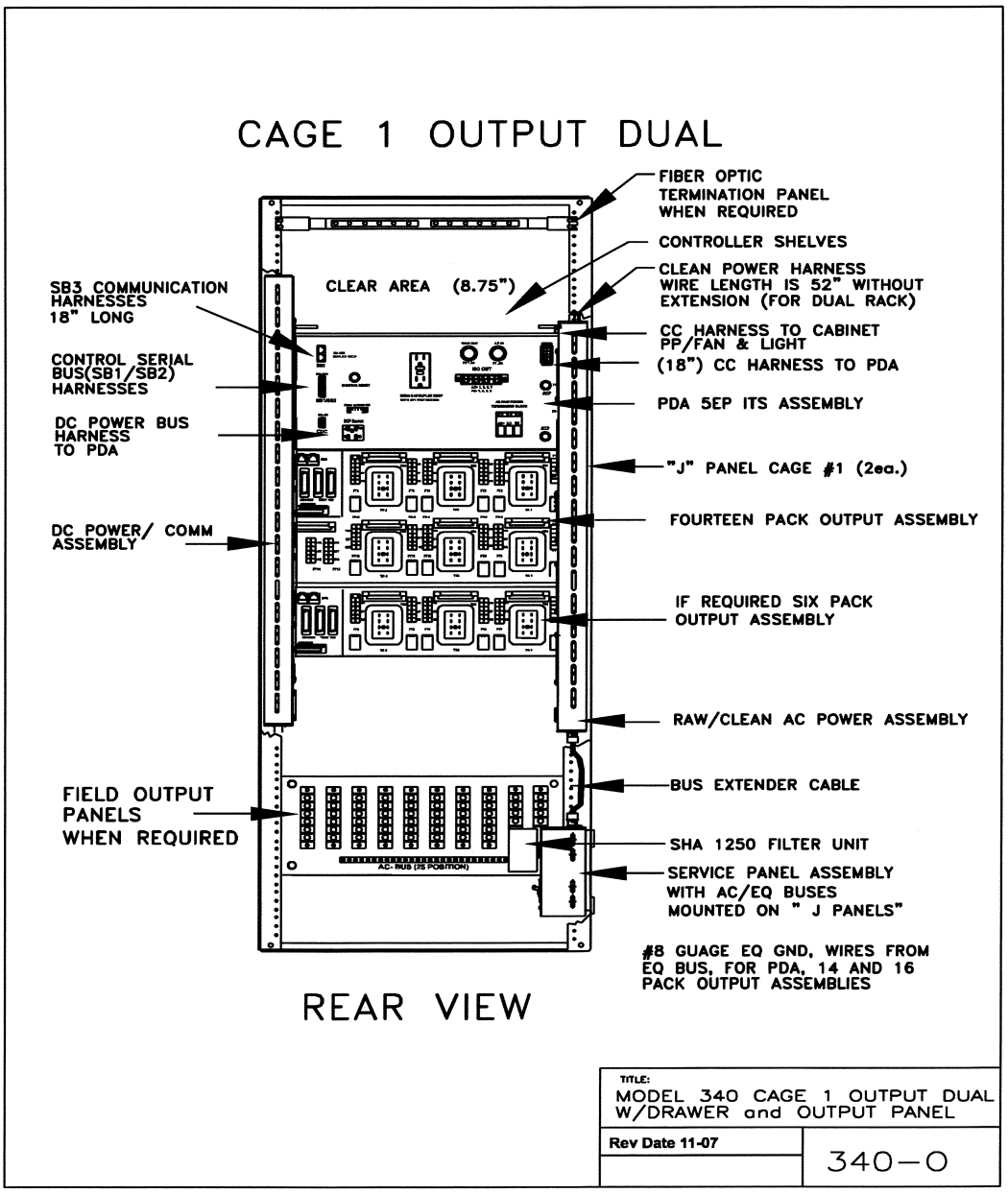

Figure 19
Model 340 Cage 1 Outputs (Dual) Assembly Requirements

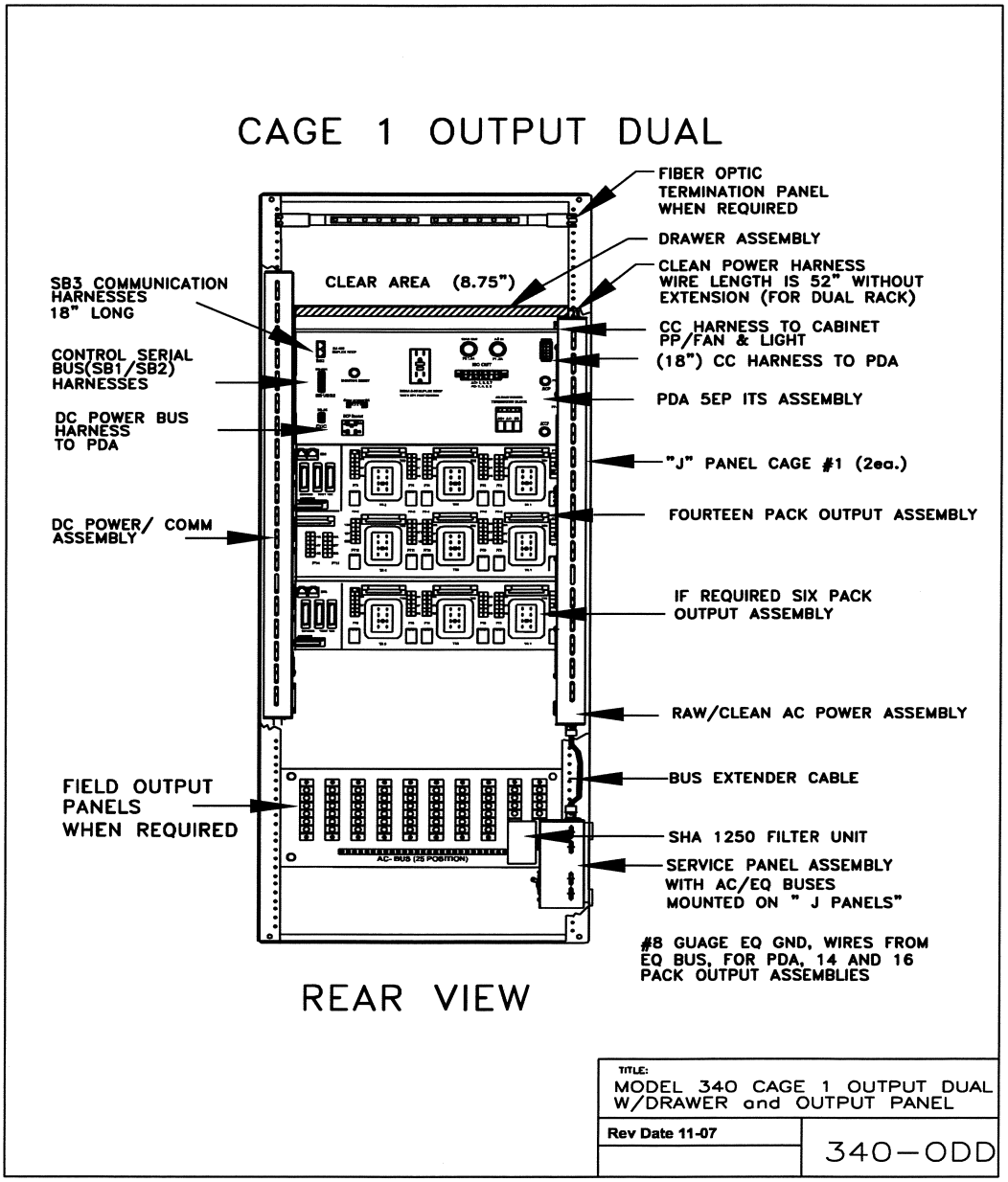

Figure 20
Model 340 Cage 1 Outputs w/ Controller Drawer Assy (Dual) Assy Requirements

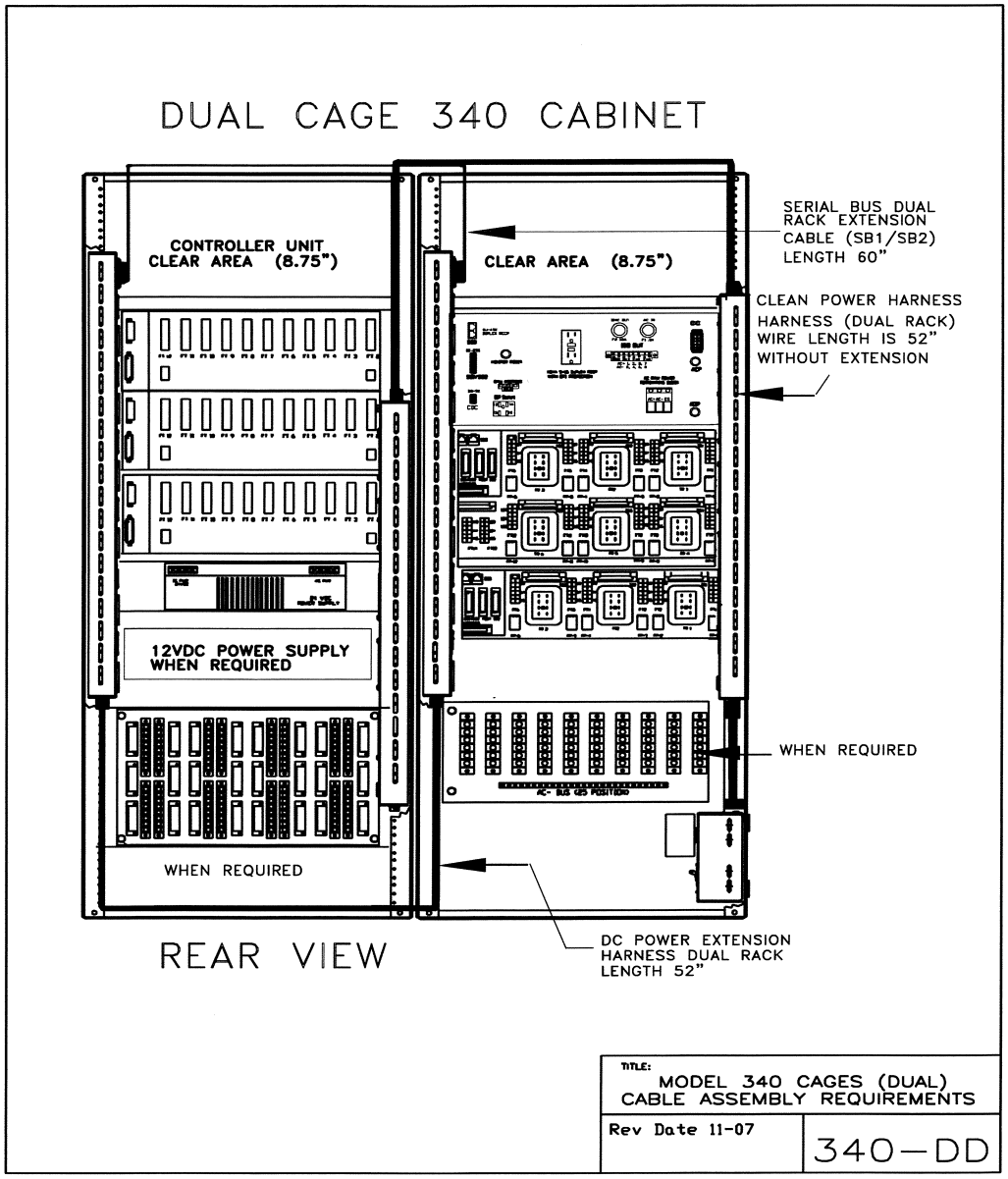

Figure 21
Model 340 Cages (Dual) Cable Assembly Requirements

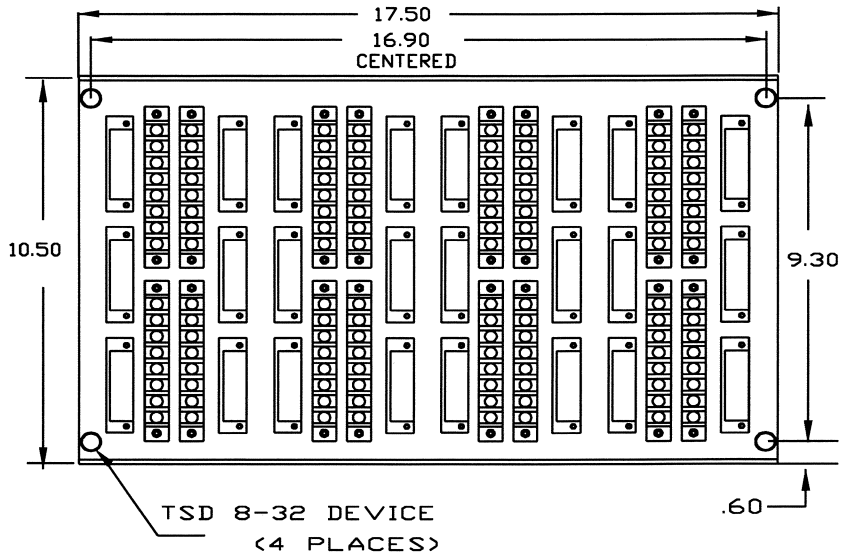

1. The Terminal Blocks are 8 position #8 feed thru type with Brass Nickel Plated screws.

2. The pluggable surrestors are EDCO MRA 61C -6, designed for loop operation, or equal.

3.The Thumb Screws that hold the panel to the mounting brackest are TSD #8-32 devices.

4. The panel shall be made of .90, H32-5052 aluminum.

5.Silkscreening of the panels is shown on the drawings and shall include the Loop number.

6.The cables from the Input Assemblies to the Field Termal shall be twisted 2 pair, 22 awg. including a shield for equipment ground bonded to a pvc cover, Manhattan SBZ9812012 or equal.

7. Each cable shall have enough length to be terminated from the Field Panel to an Input Assembly located at the further most location. The cable must be marked with a permanent label showing the termination on the Field Panel.

TITLE: FIELD INPUT PANEL	
Rev Date 7-3-07	Special

Figure 21A
Field Input Panel

INPUT FILE #1

SLOT1	SLOT2	SLOT3	SLOT4	SLOT5	SLOT6	SLOT7	SLOT8	SLOT9	SLOT10	SLOT11	SLOT12	SIU - INPUT 1
CHANNEL 1 IN1-6 TC 1 1-1A	CHANNEL 1 IN1-8 TC 3 2-1A	CHANNEL 1 IN1-10 TC 5 2-2A	CHANNEL 1 IN1-12 TC 7 2-1C	CHANNEL 1 IN1-14 TC 9 2-2C	CHANNEL 1 IN1-16 TC 11 3-1A	CHANNEL 1 IN1-18 TC 13 4-1A	CHANNEL 1 IN1-20 TC 15 4-2A	CHANNEL 1 IN1-22 TC 17 4-1C	CHANNEL 1 IN1-24 TC 19 4-2C	CHANNEL 1 IN1-26 TC 21 PED2	CHANNEL 1 IN1-28 TC 23 PED6	1001 ADDRESS PLUG FRONT VIEW
CHANNEL 2 IN1-7 TC 2 1-1B	CHANNEL 2 IN1-9 TC 4 2-1B	CHANNEL 2 IN1-11 TC 6 2-2B	CHANNEL 2 IN1-13 TC 8 2-1D	CHANNEL 2 IN1-15 TC 10 2-2D	CHANNEL 2 IN1-17 TC 12 3-1B	CHANNEL 2 IN1-19 TC 14 4-1B	CHANNEL 2 IN1-21 TC 16 4-2B	CHANNEL 2 IN1-23 TC 18 4-1D	CHANNEL 2 IN1-25 TC 20 4-2D	CHANNEL 2 IN1-27 TC 22 PED4	CHANNEL 2 IN1-29 TC 24 PED8	

INPUT FILE #2

SLOT1	SLOT2	SLOT3	SLOT4	SLOT5	SLOT6	SLOT7	SLOT8	SLOT9	SLOT10	SLOT11	SLOT12	SIU - INPUT 2
CHANNEL 1 IN2-6 TC 1 5-1A	CHANNEL 1 IN2-8 TC 3 6-1A	CHANNEL 1 IN2-10 TC 5 6-2A	CHANNEL 1 IN2-12 TC 7 6-1C	CHANNEL 1 IN2-14 TC 9 6-2C	CHANNEL 1 IN2-16 TC 11 7-1A	CHANNEL 1 IN2-18 TC 13 8-1A	CHANNEL 1 IN2-20 TC 15 8-2A	CHANNEL 1 IN2-22 TC 17 8-1C	CHANNEL 1 IN2-24 TC 19 8-2C	CHANNEL 1 IN2-26 TC 21 PRE 1	CHANNEL 1 IN2-28 TC 23 PRE 3	1010 ADDRESS PLUG FRONT VIEW
CHANNEL 2 IN2-7 TC 2 5-1B	CHANNEL 2 IN2-9 TC 4 6-1B	CHANNEL 2 IN2-11 TC 6 6-2B	CHANNEL 2 IN2-13 TC 8 6-1D	CHANNEL 2 IN2-15 TC 10 6-2D	CHANNEL 2 IN2-17 TC 12 7-1B	CHANNEL 2 IN2-19 TC 14 8-1B	CHANNEL 2 IN2-21 TC 16 8-2B	CHANNEL 2 IN2-23 TC 18 8-1D	CHANNEL 2 IN2-25 TC 20 8-2D	CHANNEL 2 IN2-27 TC 22 PRE 2	CHANNEL 2 IN2-29 TC 24 PRE 4	

INPUT FILE #3

SLOT1	SLOT2	SLOT3	SLOT4	SLOT5	SLOT6	SLOT7	SLOT8	SLOT9	SLOT10	SLOT11	SLOT12	SIU - INPUT 3
CHANNEL 1 IN3-6 TC 1 2-11	CHANNEL 1 IN3-8 TC 3 2-13	CHANNEL 1 IN3-10 TC 5 4-12	CHANNEL 1 IN3-12 TC 7 6-11	CHANNEL 1 IN3-14 TC 9 6-13	CHANNEL 1 IN3-16 TC 11 8-12	CHANNEL 1 IN3-18 TC 13 1-2A	CHANNEL 1 IN3-20 TC 15 3-2A	CHANNEL 1 IN3-22 TC 17 5-2A	CHANNEL 1 IN3-24 TC 19 7-2A	CHANNEL 1 IN3-26 TC 21 ALARM1	CHANNEL 1 IN3-28 TC 23 ALARM3	1011 ADDRESS PLUG FRONT VIEW
CHANNEL 2 IN3-7 TC 2 2-12	CHANNEL 2 IN3-9 TC 4 4-11	CHANNEL 2 IN3-11 TC 6 4-13	CHANNEL 2 IN3-13 TC 8 6-12	CHANNEL 2 IN3-15 TC 10 8-11	CHANNEL 2 IN3-17 TC 12 8-13	CHANNEL 2 IN4-19 TC 14 1-2B	CHANNEL 2 IN3-21 TC 16 3-2B	CHANNEL 2 IN3-23 TC 18 5-2B	CHANNEL 2 IN3-25 TC 20 7-2B	CHANNEL 2 IN3-27 TC 22 ALARM2	CHANNEL 2 IN3-29 TC 24 ALARM4	

OPTIONAL INPUT FILE #4

SLOT1	SLOT2	SLOT3	SLOT4	SLOT5	SLOT6	SLOT7	SLOT8	SLOT9	SLOT10	SLOT11	SLOT12	SIU - INPUT 4
CHANNEL 1 IN4-6 TC 1 1-1C	CHANNEL 1 IN4-8 TC 3 2-3A	CHANNEL 1 IN4-10 TC 5 2-3C	CHANNEL 1 IN4-12 TC 7 3-1C	CHANNEL 1 IN4-14 TC 9 4-3A	CHANNEL 1 IN4-16 TC 11 4-3C	CHANNEL 1 IN4-18 TC 13 5-1C	CHANNEL 1 IN4-20 TC 15 6-3A	CHANNEL 1 IN4-22 TC 17 6-3C	CHANNEL 1 IN1-24 TC 19 7-1C	CHANNEL 1 IN1-26 TC 21 8-3A	CHANNEL 1 IN1-28 TC 23 8-3C	1100 ADDRESS PLUG FRONT VIEW
CHANNEL 2 IN4-7 TC 2 1-2C	CHANNEL 2 IN4-9 TC 4 2-3B	CHANNEL 2 IN4-11 TC 6 2-3D	CHANNEL 2 IN4-13 TC 8 3-2C	CHANNEL 2 IN4-15 TC 10 4-3B	CHANNEL 2 IN4-17 TC 12 4-3D	CHANNEL 2 IN4-19 TC 14 5-2C	CHANNEL 2 IN4-21 TC 16 6-3B	CHANNEL 2 IN4-23 TC 18 6-3D	CHANNEL 2 IN1-25 TC 20 7-2C	CHANNEL 2 IN1-27 TC 22 8-3B	CHANNEL 2 IN1-29 TC 24 8-3D	

SIU INPUT ASSY	ADDRESS	ADDRESS PLUG BINARY
Input Assembly 1	1-2 7-8	1001
Input Assembly 2	1-2 5-6	1010
Input Assembly 3	1-2 5-6 7-8	1011
Input Assembly 4	1-2 3-4	1100
Input Assembly 5	1-2 3-4 7-8	1101

Jumper settings are grouded true.
Install jumper for logic 1.

TITLE: **INPUT ASSEMBLY ASSIGNMENT TO FIELD PANELS**

NO SCALE

JULY 2 2007

SPECIAL SET

Figure 21B
Input Assembly Assignment to Field Panels

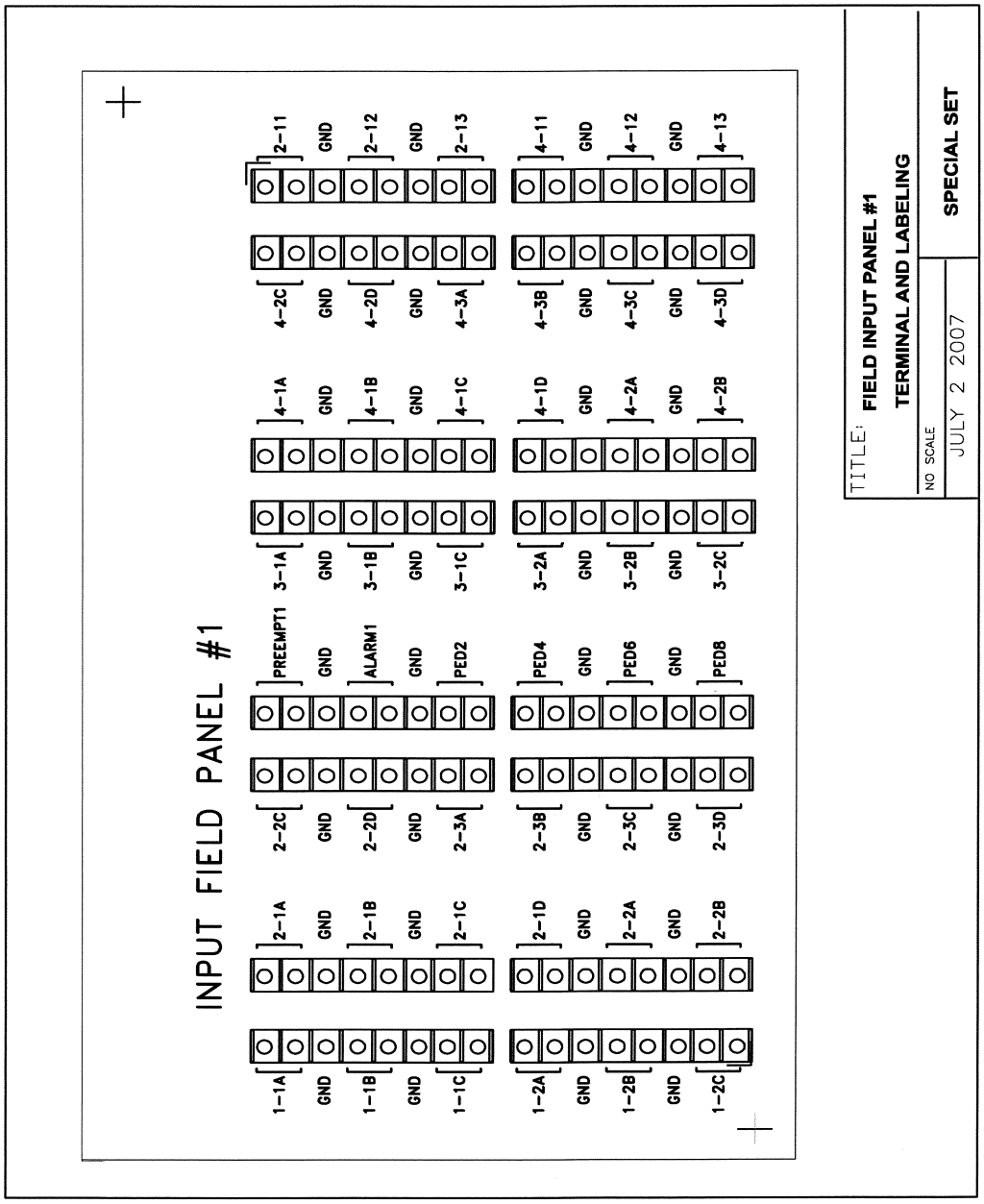

Figure 21C
Field Input Panel #1 Terminal and Labeling

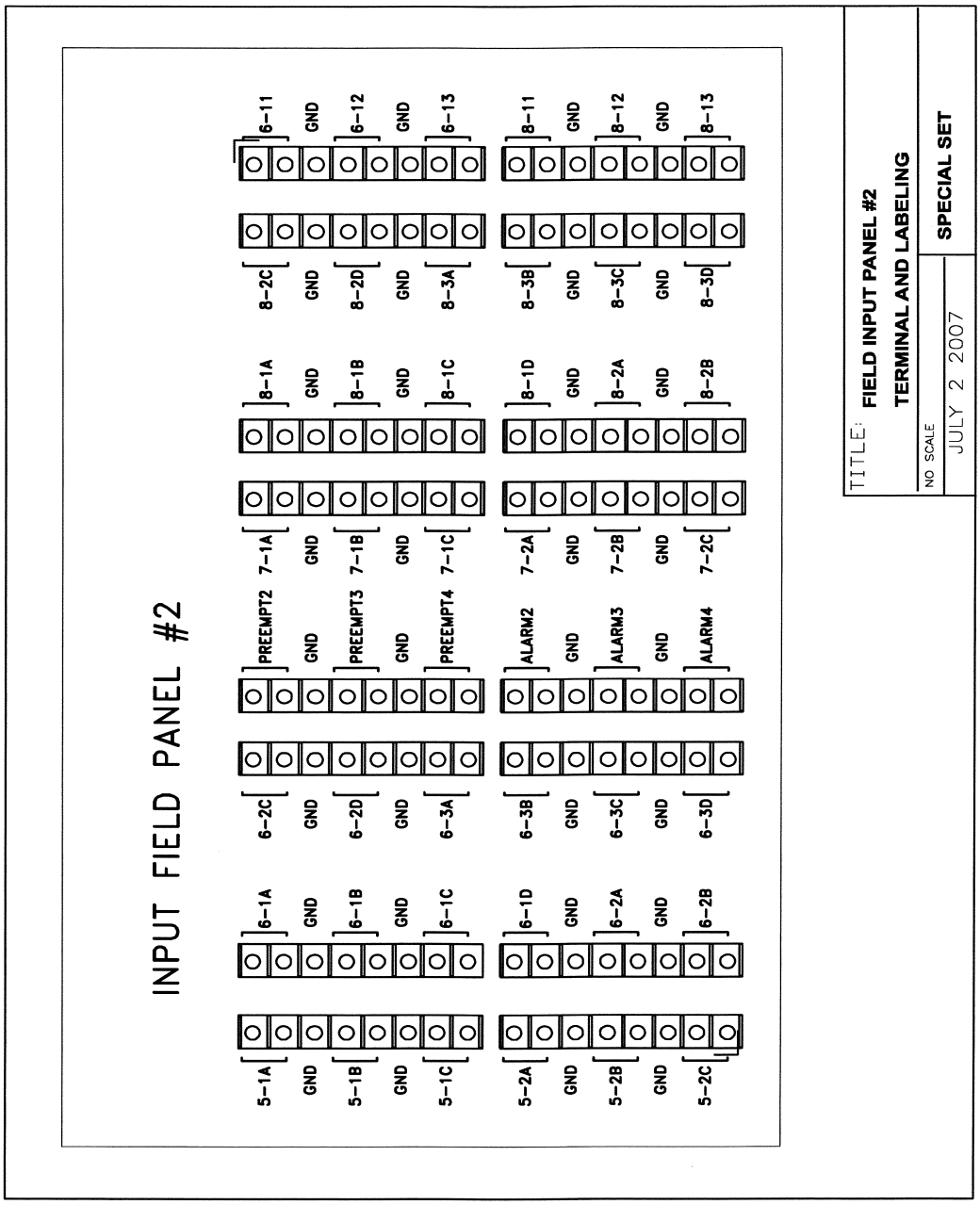

Figure 21D
Field Input Panel #2 Terminal and Labeling

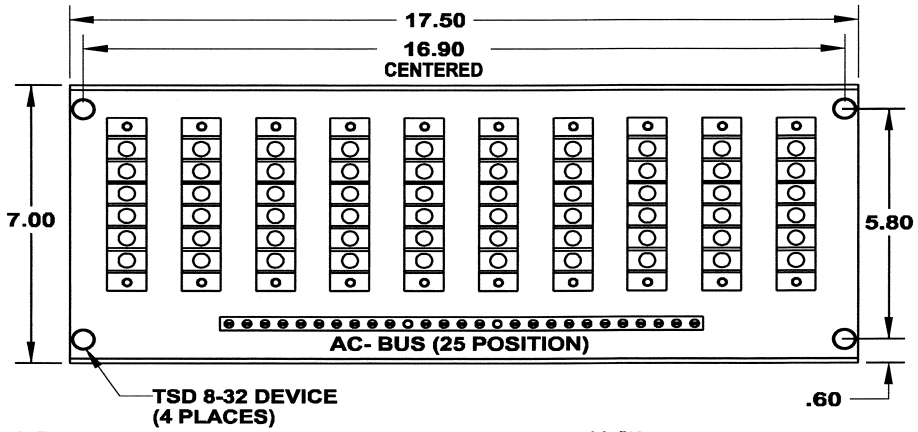

1. The terminal blocks are Magnum A48130604 or approved equal with six (6) #10 feed thru brass nickel plated screw lug positions, rated at 600V, 35 amperes, and designed to prevent twisting in the housing.
2. The panel shall be made of .090, 5052 H32 alluminum material.
3. Output Panel #1 is silkscreened for phases 1 thru 7 with the terminal number and signal head face color as per drawings.
4. Output Panel #2 is silkscreened for phases 8 thru 14 with the terminal number and signal head face color as per drawings.
5. The thumb screws that hold the panel to the angle brackets are TSD screws #8/32
6. The cables from the Output Assemblies to the Output Panels shall be long enough to install the output panels at the bottom of the 19" rack.
7. The cables from the Output Assemblies to the Output Panels must be labeled with permanent markings showing phase(s) that are attached to the output panel.

TITLE: FIELD OUTPUT PANEL	
Rev Date 7-3-07	SPECIAL

Figure 21E
Field Output Panel

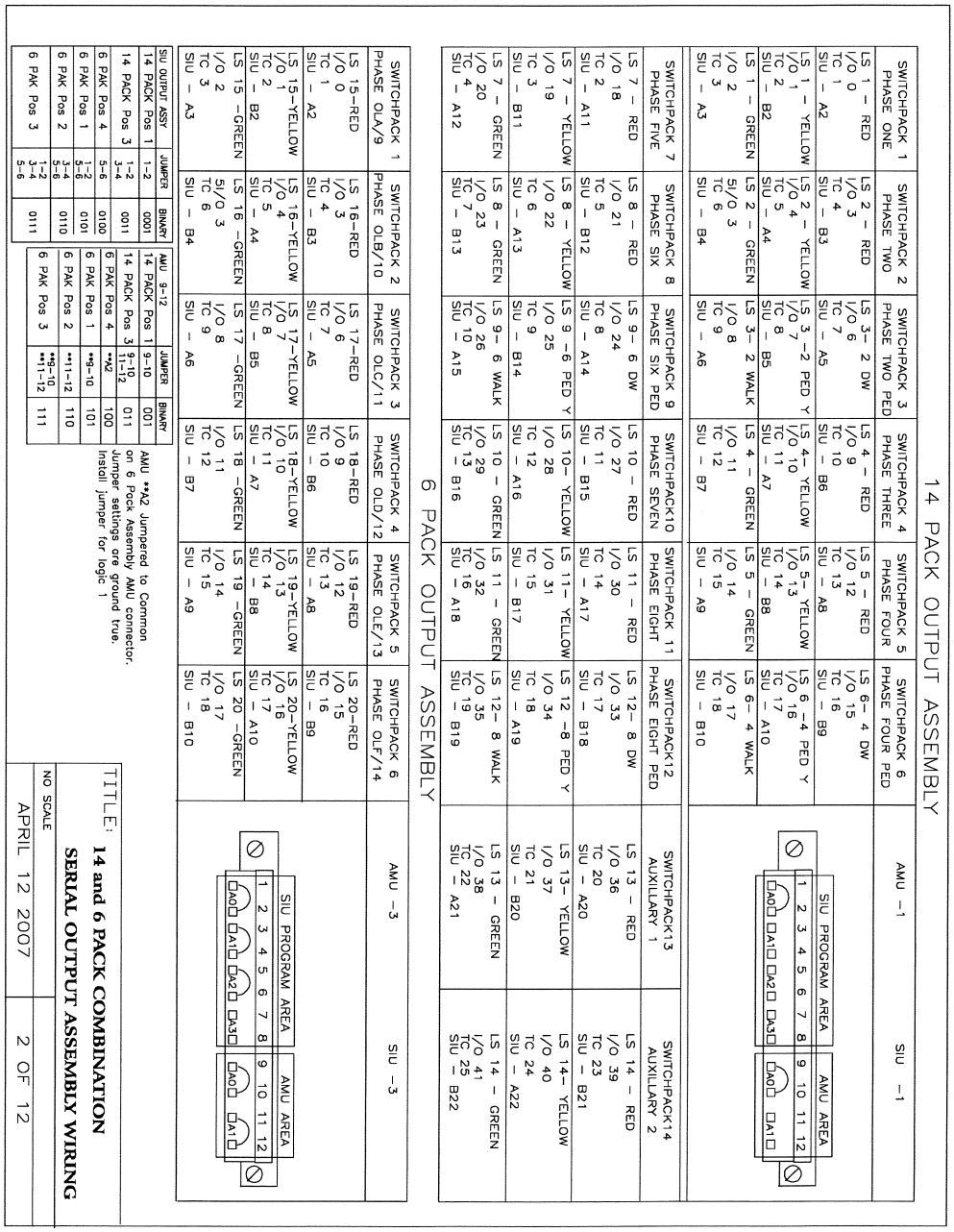

Figure 21F
14 and 6 Pack Serial Output Assembly Wiring Assignment

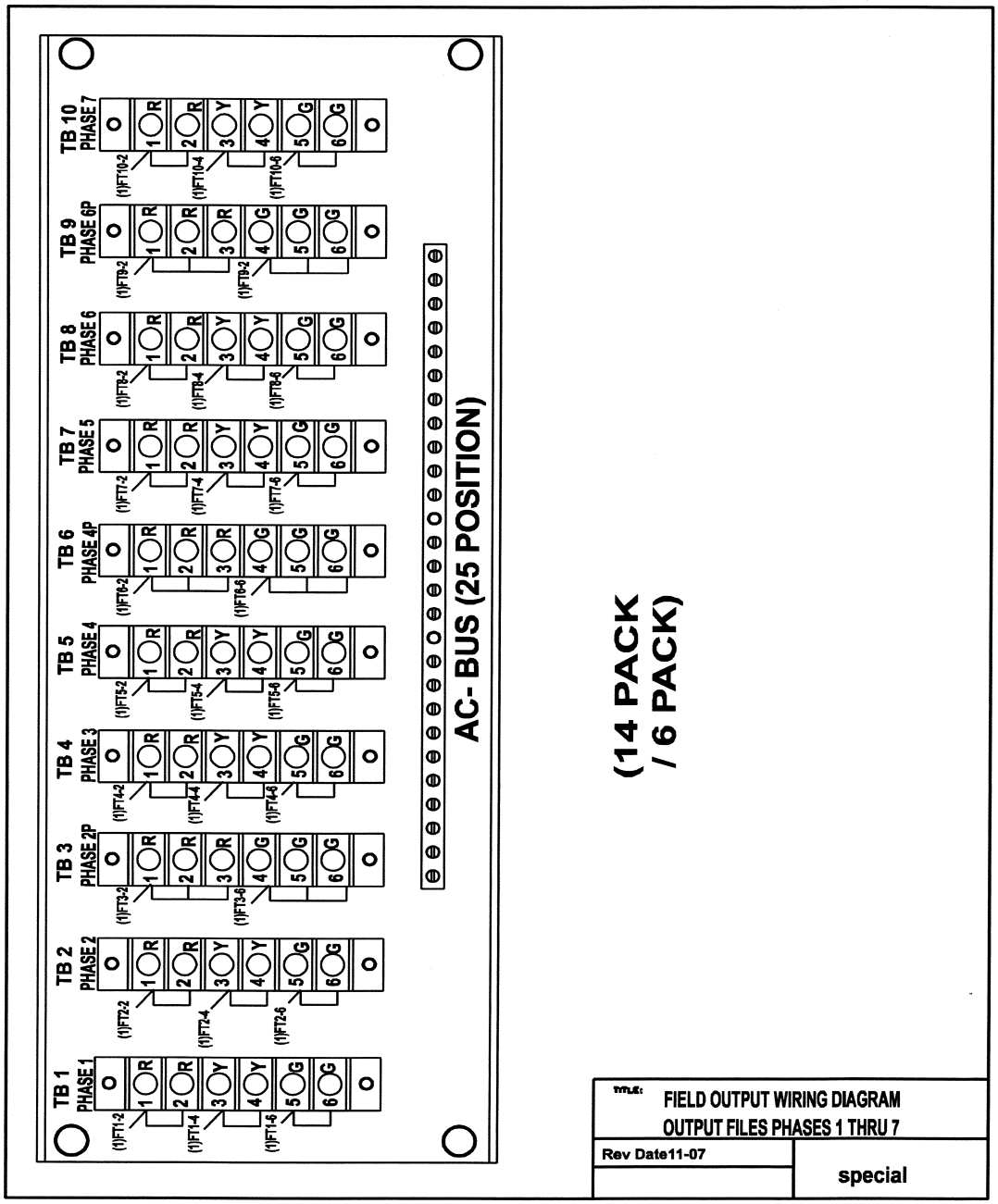

Figure 21G
Field Output Wiring Diagram Output Files Phases 1 Thru 7

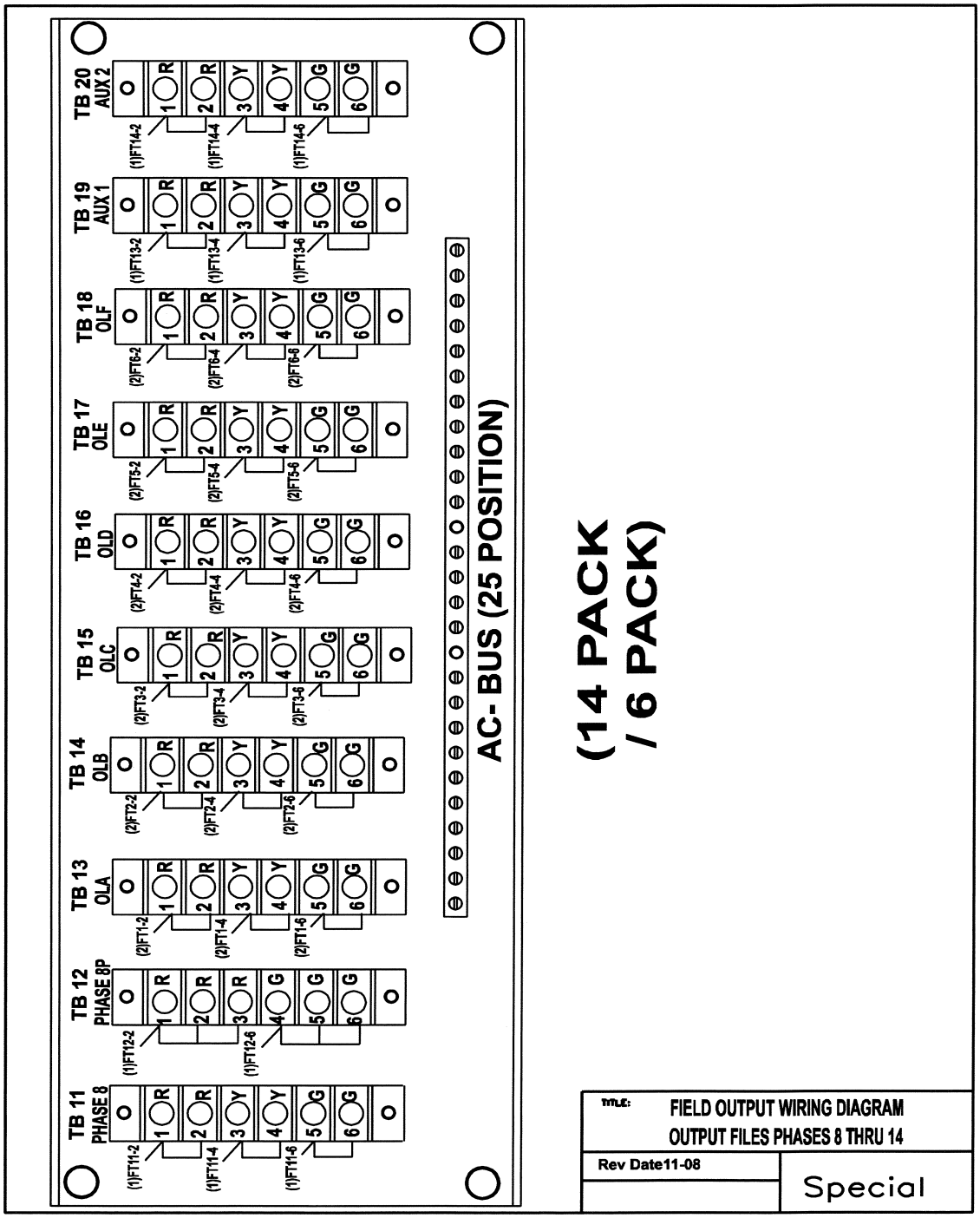

Figure 21H
Field Output Wiring Diagram Output Files Phases 8 Thru 14

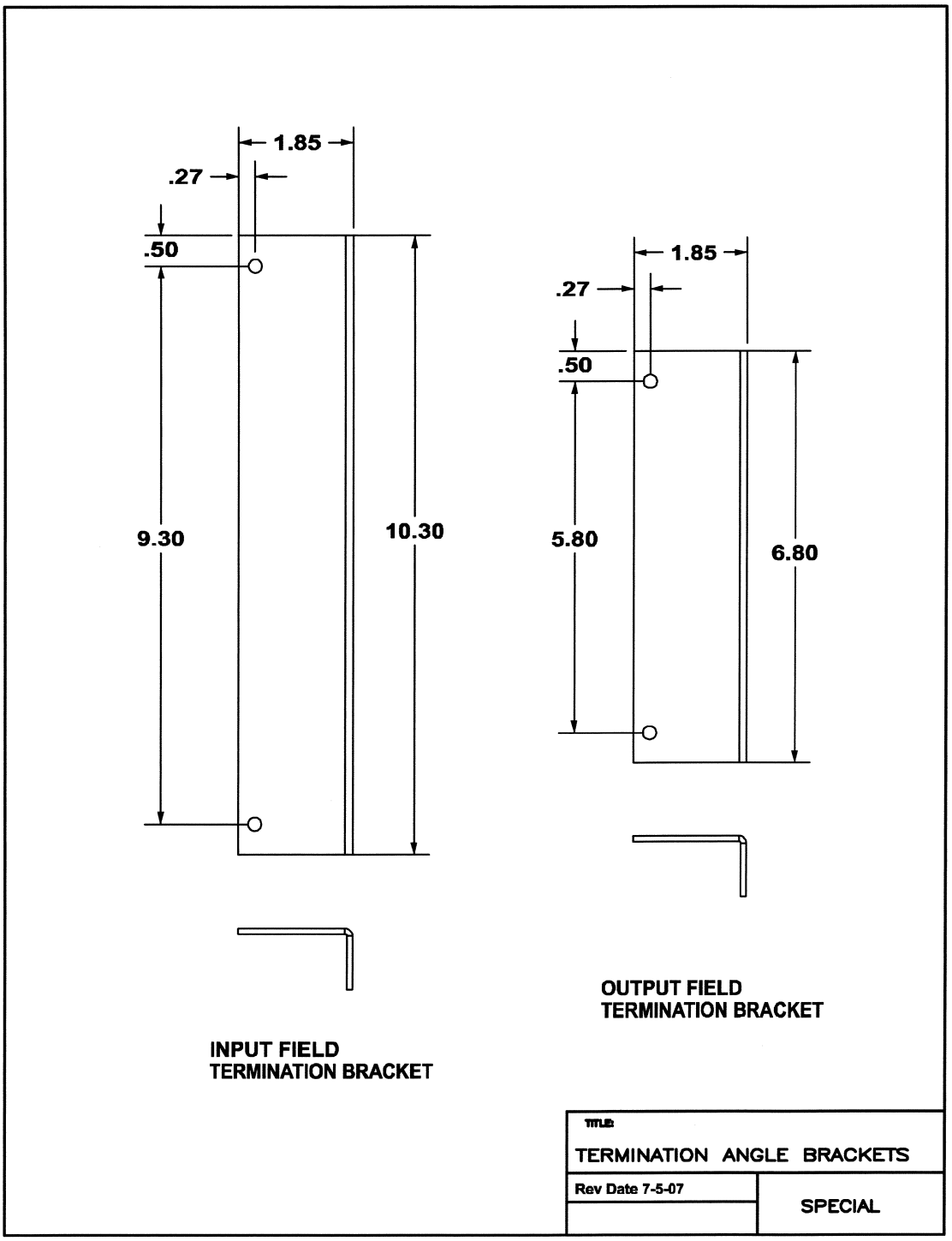

Figure 21I
Termination Angle Brackets

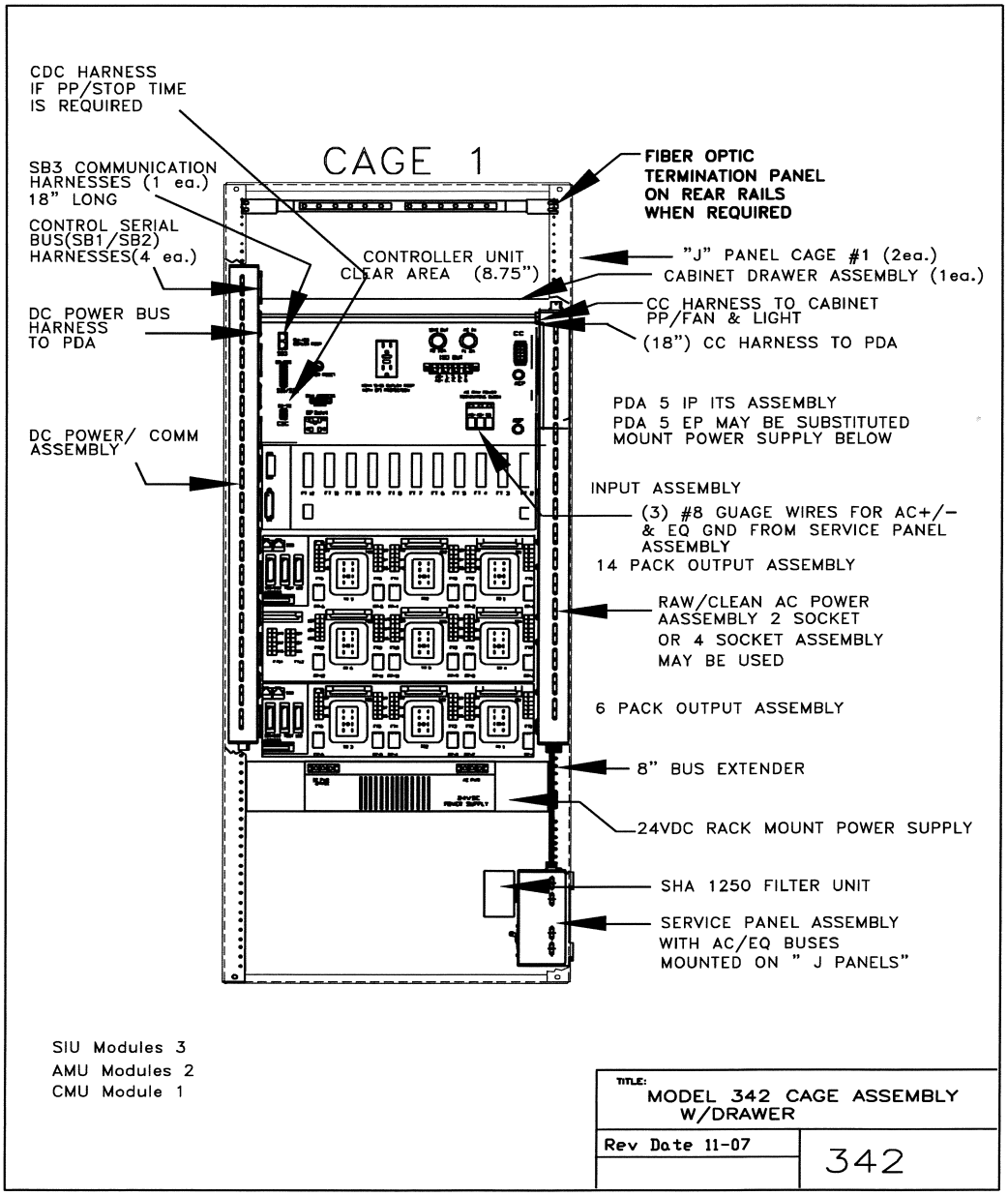

Figure 22
Model 342 Cage 1 Assembly Requirements

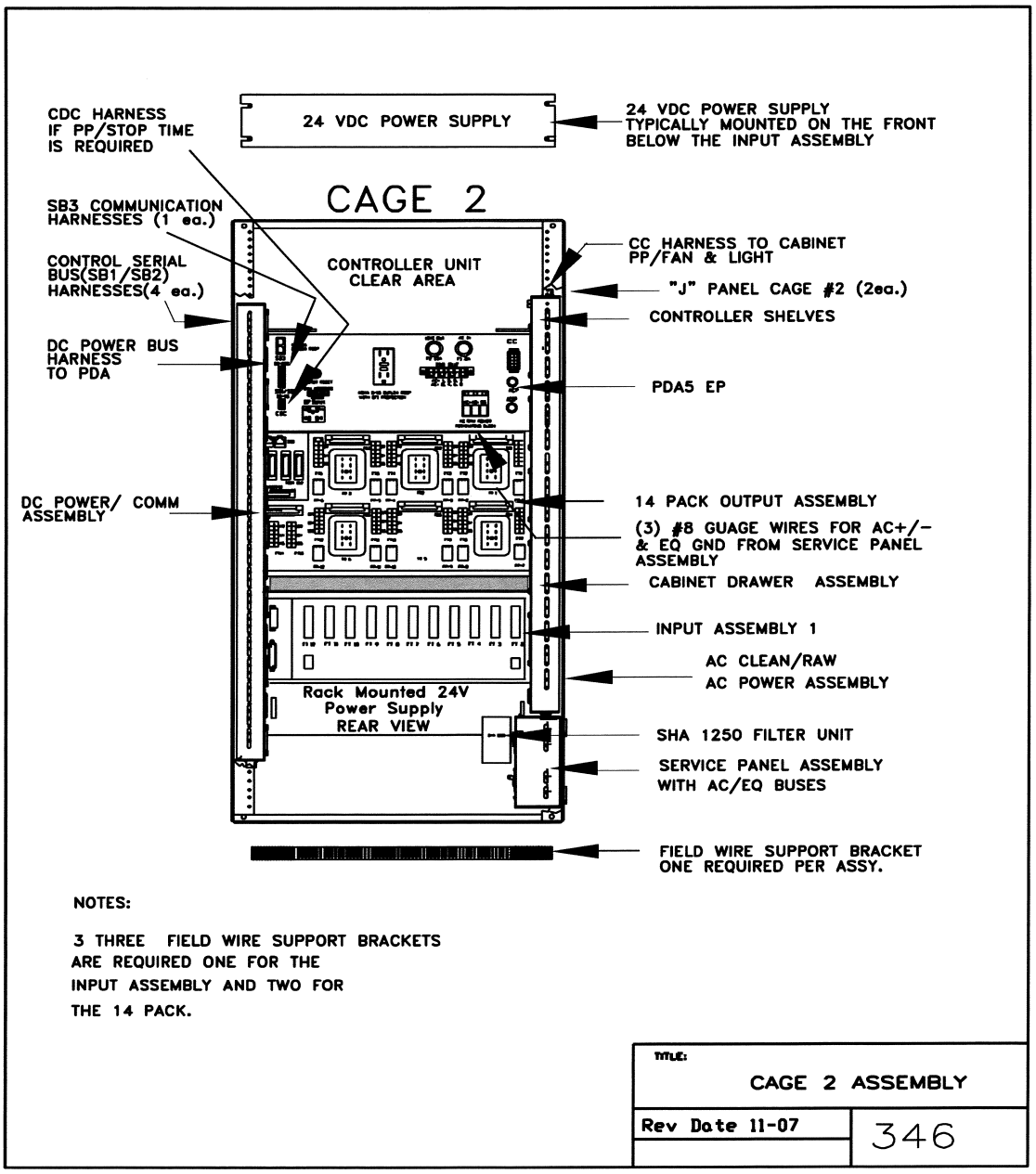

Figure 23
Cage 2 Assembly – Modified Drawer Loc.

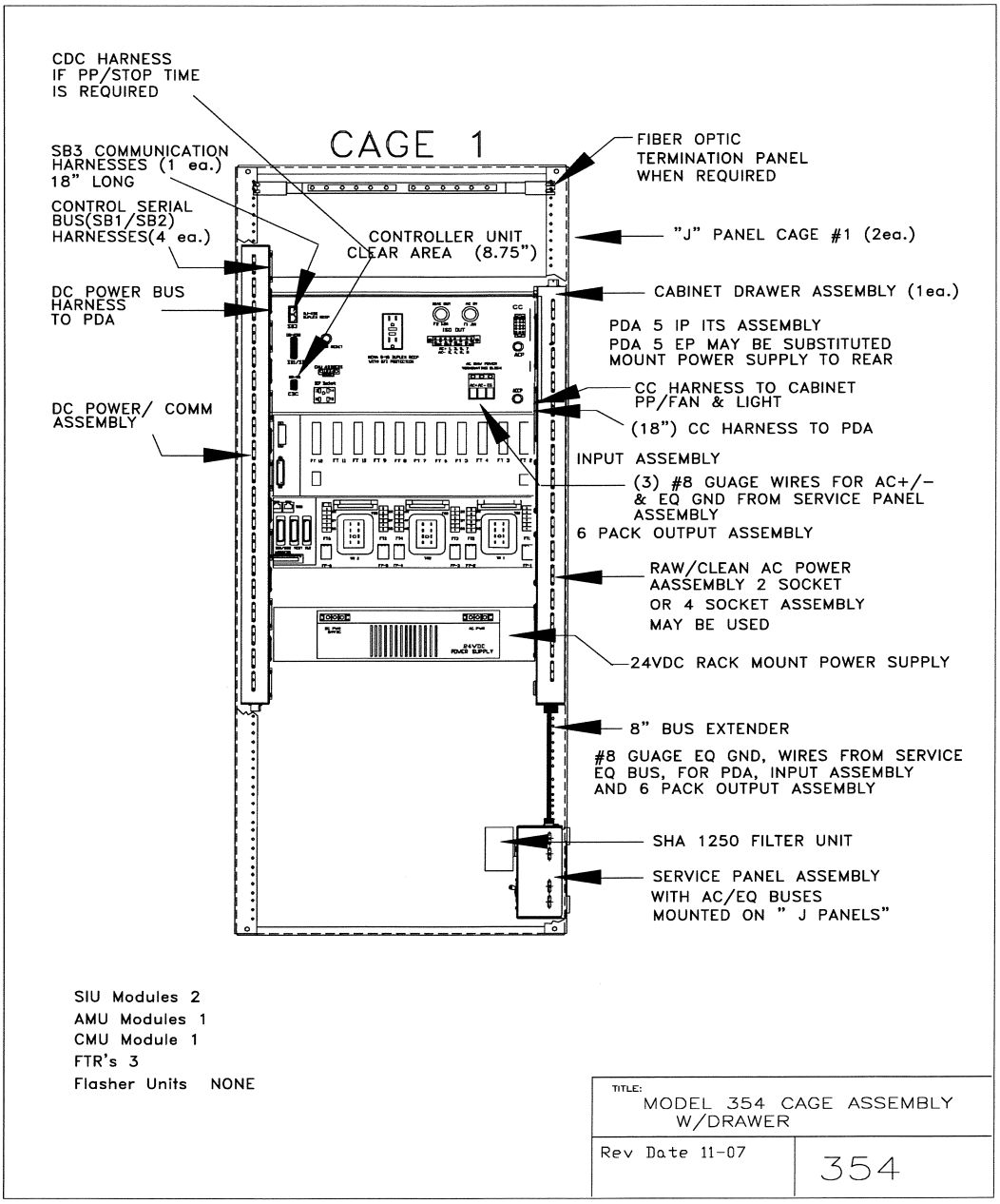

Figure 24
Model 354 Cage 1 Assembly Requirements

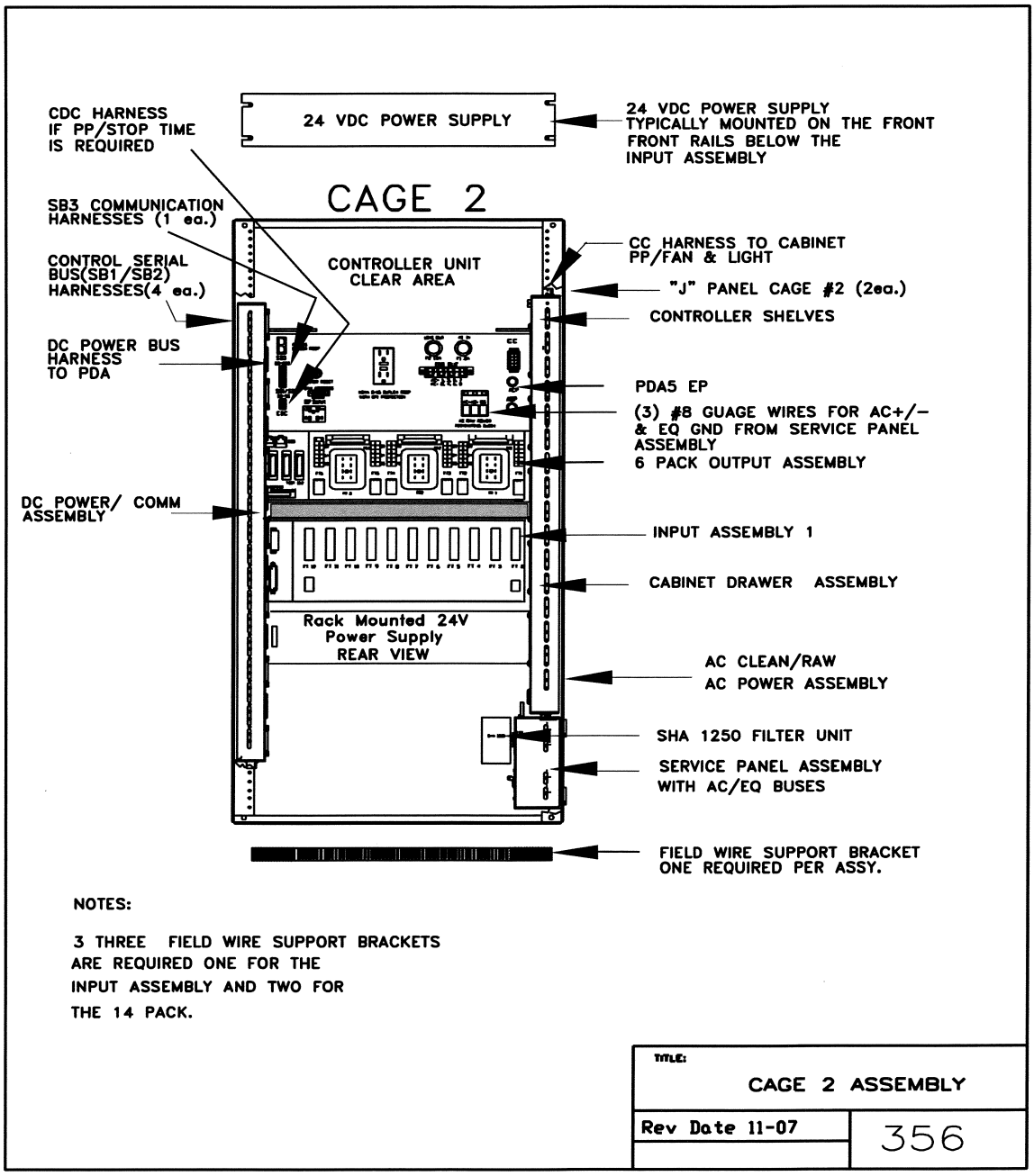

Figure 25
Model 356 Cage 2 Assembly Requirements

C. Serial Bus # 1 System.

1. Serial Bus #1 must function as a distributed real-time cabinet control and communications bus. The Bus Commands are generated in the ATC Controller Unit. They must be passed to the assembly Model 218 SIU Units and Model 212 CMU Monitor Unit using EIA 485 COMM/SDLC Protocol Frame Address/Message Packets. The SIU Units must read the Address Connector for Assembly Address Number. The CMU must read the Address Connector of the PDA. The AMU units must read address information as part of the Output Assembly address connector.

2. The following Address Frame numbers must be assigned to the assemblies and monitor as:

Address	*SYSTEM ASSEMBLY / UNIT*	*ADDRESS*										
		SIU								*AMU*		
		A7	*A6*	*A5*	*A4*	*A3*	*A2*	*A1*	*A0*	*A2*	*A1*	*A0*
0	Reserved									0	0	0
1	14 Pack in position 1	0	0	0	0	0	0	0	1	0	0	1
2	Reserved											
3	14 Pack in position 3	0	0	0	0	0	0	1	1	0	1	1
4	6 Pack in position 4	0	0	0	0	0	1	0	0	1*	0	0
5	6 Pack in position 1	0	0	0	0	0	1	0	1	1*	0	1
6	6 Pack in position 2	0	0	0	0	0	1	1	0	1*	1	0
7	6 Pack in position 3	0	0	0	0	0	1	1	1	1*	1	1
8	Reserved											
9	Input #1	0	0	0	0	1	0	0	1			
10	Input #2	0	0	0	0	1	0	1	0			
11	Input #3	0	0	0	0	1	0	1	1			
11	Input #4	0	0	0	0	1	1	0	0			
13	Input #5	0	0	0	0	1	1	0	1			
14	Reserved											
15	CMU #1	0	0	0	0	1	1	1	1			
16	CMU #2	0	0	0	1	0	0	0	0			
17	CMU #3	0	0	0	1	0	0	0	1			
18	CMU #4	0	0	0	1	0	0	1	0			
19	CPU	0	0	0	1	0	0	1	1			
20	FIO 2A or 8	0	0	0	1	0	1	0	0			

Address	*SYSTEM ASSEMBLY / UNIT*	*ADDRESS*										
		SIU								*AMU*		
		A7	*A6*	*A5*	*A4*	*A3*	*A2*	*A1*	*A0*	*A2*	*A1*	*A0*
21to 254	Reserved											
255	Broadcast All	1	1	1	1	1	1	1	1			

*A2 Jumpered on Assembly

3. If the Command Address Frame matches the Unit, the Unit must read the message for processing and response. The Message First Byte must be the message name. The Unit must set the Response Packet First Byte to Command Message plus 128 and the appropriate data.

D. Serial Bus #2 System.

1. Serial Bus #2 must be dedicated to gathering preprocessed data from the Cabinet Smart Input Devices resident in the input assemblies. This serial bus must be for off-line use in operations with the ATC Controller Unit controlling data collection. Serial Bus #2 must be designed to operate Asynchronous EIA 485 lines at selected data rates up to 19,200 bits per second. See section on SIU Port 2 Operation for communication, interface and message protocol.

2. Typical Command/Response Messages must use similar message format as Serial Bus #1, collecting Operational Status, Detection Speed reports, Occupancy reports, Counts, etc.

E. Cabinet Control/Emergency Override System (CCEOS).

1. System Description. The Control and Emergency Override System is composed of the Police Panel Switches, Door Switches, ITS Power Distribution Assembly with resident Cabinet Monitor Unit, Serial Bus #1, Modular Bus Assemblies and cables, and the Output Assemblies with Transfer Relays Program Block Connectors and AMU Units. The purpose of the Emergency Override system is to transfer control from the ATC Controller Unit to the Cabinet Monitoring System. The Emergency Override system may also be manually controlled by switches either on the ITS PDA Assembly or Police Panel. The action taken depends upon the application. The Transfer Relays in the Output Assemblies, when de-energized, must transfer from Switch Pack Control to the EOS control. When the Cabinet is in the SIGNALS OFF condition the Main Contactor must be OFF and the FTR's are energized. If the intersection is FLASH Mode when in the Ramp Metering application, the display is NO INDICATION or BLANK Mode.

2. Cabinet Monitoring System. The Cabinet Monitoring System must use two serial Bus systems for the interface; Serial Bus #1, links the ATC Controller Unit via a Serial Bus Harness to the DC Power/Communications Assembly. A Serial Bus Harness plugged into

the DC Power/Communications Assembly must connect to the 212 Cabinet Monitor Unit with application serial memory key resident in the PDA ITS.

Serial Bus #3 Harnesses must provide the interconnection between the Output Assembly's 214 Auxiliary Monitor Units and the CMU. The Bus Harnesses must be daisy chained between the Output Assemblies and the PDA ITS. See sections CMU and AMU sections for operations, functions, protocol, Message frames and bit rate.

F. Housings.

1. Housing Package. The housings must include, but not be limited to, the following:

   a. Enclosure & Doors

   b. Gasketing

   c. Lifting Eyes & External Bolt Heads

   d. Door Latches & Locks

   e. Ventilation

   f. Cage Supports & Mounting

   g. Door Hinges & Catches

   h. Police Panel

   i. Aluminum Surfaces

   j. Light fixtures

2. Housing Construction. The housing must be rainproof. It must have front and rear doors, each equipped with a lock and handle. The enclosure top must be crowned to prevent standing water. The aluminum surface must be either coated with a Mill Finish or Anti-Graffiti Paint.

   a. Material Thickness. The enclosure, doors, lifting eyes, gasket channels, police panel door, spacer supports and all supports welded to the enclosure and doors must be fabricated of 0.125 in. minimum thickness aluminum sheet. The filter shell, filter trough, fan support and police panel enclosure must be fabricated of 0.080 in. minimum thickness aluminum sheet. The spacer supports must have the option to use 0.059 in. minimum stainless steel sheet.

   b. Welds. All exterior seams for enclosure and doors must be continuously welded and must be smooth. All edges must be filled to a radius of 0.03125 in. minimum. Exterior cabinet welds must be done by gas Tungsten arc TIG process only. ER5356 aluminum alloy bare welding electrodes conforming to AWS A5.10 requirements must be used for welding on aluminum. Procedures, welders and welding operators must conform to the requirements and practices in AWS B3.0 and C5.6 for aluminum.

Internal cabinet welds must be done by gas metal arc MIG or gas Tungsten arc TIG Process.

c. Aluminum Surface Protection. ALUMINUM SURFACE PROTECTION must be either MILL FINISH or ANTI-GRAFFITI Paint.

(1) Anti – Graffiti Paint. The aluminum surface must be cleaned, etched and rinsed. The cleaning and etching procedure must be to immerse in inhabited alkaline cleaner at 71 degrees C for five minutes (Oakite 61A, Diversey 909 or equivalent in mix of the 6 to 8 ounces per gallon to distilled water). Rinse in cold water. Etch in a sodium solution at 66 degrees C for 5 minutes 90.5 ounce sodium fluoride plus 5 ounces of sodium hydroxide mix per gallon to distilled water. Rinse in cold water. Desmut in a 50% by volume nitric acid solution at 20 degrees C for 2 minutes. Rinse in cold water. Dry surfaces by preheating in an oven for 15 minutes at 400 degrees F. Remove and coat the surfaces using TCI Wheel Silver # 9811- 0110 with a minimum film build of not more than 2 mils total thickness. Place back into preheated oven for 10 minutes minimum at 360 degrees F to gel the base coat. Remove and coat the surfaces using TCI Anti-graffiti Clear # 9810-0231. Place back into oven and fully cure at 380 degrees F for 40 minutes.

d. Enclosure Door Frames and Door Seals. The enclosure door frames must be double flanged out on all four sides and must have strikers to hold tension on, and form a firm seal between, the door gasketing and the frame. The dimension between the door edge and the enclosure external surface when the door is closed and locked must be 0.156 in. (+/-0.08 in.).

3. Gasketing. Gasketing must be provided on all door openings and must be dust-tight. Gaskets must be 0.25 in. minimum thickness closed cell neoprene or silicone (BOYD R-108480 or equal) and must be permanently bonded to the metal. A gasket top and side channels must be provided to support the top gasket on the door to prevent gasket gravitational fatigue.

4. Cage Mounting Supports. Cage mounting supports must be provided on either side, level with the bottom edge of the door opening, for horizontal support and bolt attachment; side cage supports provided for the bracket cage supports; and bracket cage support attachments.

5. Lifting Eyes and Exterior Bolt Heads. The housing must be provided with 2 lifting eyes for placing the cabinet on its foundation. Each eye opening must have a minimum diameter of 0.75 in.. Each eye must be able to support the weight load of 1000 lbs. All bolt heads must be tamperproof type.

6. Door Latches and Locks. The latching handles must have provision for padlocking in the closed position. Each handle must be 0.75 in. minimum diameter stainless steel with a minimum of 0.50 in. shank. The padlocking attachment must be placed at 4 in. from the handle shank center. An additional 4 in. minimum gripping length must be provided.

a. Latch/Lock Mechanism. The latching mechanism must be a three-point draw roller type. The pushrods must be turned edgewise at the outward supports and have a cross section of 0.25 in. thick by 0.75 in. wide minimum. Rollers must have a minimum diameter of 0.875 in. with nylon wheels and steel ball bearings. When the door is closed and latched, the door must be locked. The lock and lock support must be rigidly mounted on the door. The lock must be mounted in the upper quadrant, above the handle when in it's full open position. In the locked position, the bolt throw must extend a minimum of 0.25 in. (+/-0.03125 in.) into the latch cam area. A seal must be provided to prevent dust or water entry through the lock opening.

b. Lock and Keys. The locks must be Corbin 2 type. One key must be supplied with each lock. The keys must be removable in the locked position only. The locks must have rectangular, spacing loaded bolts. The bolt must have a 0.281 in. throw and must be 0.75 in. wide by 0.375 in. thick. Tolerance is 0.035 in.. A swing away cover must be placed over the key entrance to protect the lock mechanism.

c. Cam. The center latch cam must be fabricated of a minimum thickness of 0.188 in. aluminum, or 11 gauge steel. The bolt surface must horizontally cover the cam thickness. The cam must be structured to only allow the door to open when the handle is moved toward the center of the door.

7. Housing Ventilation. Housing Ventilation must including intake, exhaust, filtration, and continuous running fan assembly, or a thermostat controlled fan.

a. Intake & Filter. The louvered vent depth must be a maximum of 0.25 in.. A removable and reusable air filter must be housed behind the door vents. The filter filtration area must cover the vent opening area. A filter shell must be provided that fits over the filter providing mechanical support for the filter. This shell must be louvered to direct the incoming air downward. The shell sides and top must be bent over a minimum of 0.25 in. to house the filter. The filter resident in its shell must be held firmly in place with a bottom trough and spring loaded upper clamp. No incoming air must bypass the filter. The bottom filter trough must be formed into a waterproof sump with drain holes to the outside housing. The filter must be 16 in. wide by 12 in. high by 0.875 in. thick. The filter must be an ECO-AIR Product E35S or equal. The intake (including filter with shell) and exhaust areas must pass a minimum of 60 cubic feet of air per minute for Housing #1; 120 cubic feet of air per minute for Housing #3; and 26 cubic feet of air per minute for Housing #2.

b. Fan. Each electric fan must be equipped with ball or roller bearings and must have a minimum capacity of 100 cubic feet of free air delivery per minute. The fan must be mounted within the housing and protected with a finger guard.

8. Hinges. Stainless Steel hinges (Two-bolts per leaf) must be provided to bolt the enclosure to the doors. Housing #1 & Housing #3 must have four hinges per door and Housing #2 must have three hinges per door. Each hinge must be 3-1/2 in. minimum length and have a fixed pin. The pin ends must be welded to hinge and ground smooth. The pins and bolts must be covered by the door edge and not accessible when the door is closed. A ground

strap between the door and the main cabinet housing must be required when 120 VAC components are mounted on the door.

9. Door Catches. Front and rear doors must be provided with catches to hold the door open at both 90 and 165 (+/-10 degrees). The catch minimum diameter must be 0.375 in. aluminum rods. The catches must be capable of holding the door open at 90 degrees in a 60 mph wind acting at an angle perpendicular to the plane of the door.

10. Police Panel. A police panel assembly must be provided to allow the limited control access. The panel door must be equipped with a lock and master police key. The front and back of the panel must be enclosed with a rigid metal covering so that no parts having live voltage are exposed. The panel assembly must have a drain to prevent water from collecting within the assembly. The drain must be channeled to the outside. The series 35X Cabinets must have one switch provided and labeled "SIGNALS ON - OFF ". The series 34X Cabinets must have one switch labeled "FLASH/AUTO". The MANUAL CONTROL ENABLE ON-OFF switch and a receptacle for the INTERVAL ADVANCE cord must be provided. A 12 VAC transformer must be provided in advance of the INTERVAL ADVANCE receptacle. An INTERVAL ADVANCE cord, six feet in length, must be provided.

11. Housing Lighting. Fluorescent light fixtures must be provided inside the top portion of the housing. The fluorescent fixtures must be suitable for use in the housing environment when placed in the field. The fixtures must utilize an F15T5-CW fluorescent lamp. A minimum of four (4) fixtures will be provided for 340 housings, and a minimum of two (2) fixtures will be provided for all other housings.

G. Rack Cage. A Standard Rack Cage must be installed inside the housing for mounting of the ATC Controller Unit and cabinet assemblies. The EIA rack portion of the cage must consist of four continuous, adjustable equipment mounting angles. The mounting angle nominal thickness must be 11 gauge plated steel. The mounting angles must be tapped with 10-32 threads with EIA universal spacing. The mounting angle must comply with standard EIA-310-B and must be supported at the top and bottom by either welded or bolted support angles to form a cage. The mounting angles must provide holes to mount the "J" panels.

1. Clearance Between Rails. Clearance between rails for mounting assemblies must be 17.75 in..

2. Cage Connection. The cage must be bolted to the cabinet at 4 points via the housing cage supports and 4 points via associated spacer brackets (top and bottom).

3. Cage Location. The cage(s) must be centered within the cabinet door opening(s).

H. Cabinet Assemblies.

1. General.

a. Cabinet Assemblies. The cabinet assemblies must be completely removable from or installable in the cabinet cage without removing any other equipment and using only a Standard Slotted or Phillips Screwdriver.

b. Visible and Accessible Devices. All fuses, circuit breakers, switches (except Police Panel Switches and Fan Fuse) and indicators must be readily visible and accessible when the cabinet front door is open.

c. Labels and Marker Strips. All equipment in the cabinet must be clearly and permanently labeled. The marker strips must be made of material that can be easily and legibly written on using a pencil or ballpoint pen. Marker strips must be located immediately below the item they are to identify and must be clearly visible with the items installed.

d. Resistor/Capacitor Suppression. Suppression must be provided at all relay sockets (across relay coil), except for the Transfer Relays (TR) in the output assemblies where one suppression device may be common for all.

e. PDA, Output and Input Assemblies. PDA, Output and Input Assemblies Depth must include terminal sockets, plug-in units and strain relief bar (Field Wire Support Bracket). The Width must be 17.5 in. maximum including side screws. The maximum Depth, including connectors, must not exceed 14.0 in. The assembly housing top and bottom must be slotted for vertical ventilation. Assembly Thickness - Side ends must be fabricated of 0.080 in. minimum thickness aluminum sheet. All other surfaces must be fabricated of 0.0625 in. minimum thickness aluminum sheet. The aluminum metal surface must be treated with clear chromate.

f. Connector Sockets. Flasher and Switch Pack Unit sockets must be mounted with their front face 7.50 in. from the assembly front panel.

g. Nylon Guides. Guides (top and bottom) must be provided for assembly Plug-in units (Power Supply Units guide on bottom only). The guides must begin 0.50 in. from the assembly front panel face.

2. "J" Panel Assemblies. The "J" Panels must be mirror images of each other when mounted in the cabinet cage. They must be bolted to the cage with the matching shelf unit bolted to the panel. Two ten position minimum AC- Raw & Equipment Ground Copper Bus Bars must be provided on the lower right position of the J Panel when viewed from the rear door for interconnect to the Service Panel and provide the termination of AC- Raw and Equipment Ground wiring within the Cage and Cabinet.

a. Input Termination Panel Assembly. An optional Input Termination Panel must be provided that uses ten twelve-position terminal blocks and 4 copper bus bars. Eight of the twelve position terminal blocks and the four copper bus bars must be used for termination of field inputs. Two of the twelve position terminal blocks must be used for termination of the CDC interface. Input transient protection devices may be used for input termination. Terminal blocks one through four provide termination for Input

Assembly #1 and terminal blocks five through eight provide termination for Input Assembly #2. A ground lug must be provided on the panel assembly to terminate an 8 AWG green wire that is attached to the Equipment Ground copper bus bar on the "J" panel assembly. The Input Termination Panel must be mounted on the left side of the Rack Assembly, when viewing from the rear.

3. Cabinet Shelf Assemblies. A Shelf Assembly must be provided unless otherwise called out in the contract special provisions. One alternative is a shelf/drawer assembly.

4. Service Panel Assembly.

   a. General Requirements. A Service Panel Assembly must be provided. The assembly must function as the entry point for AC Power to the cabinet including main and secondary circuit breakers, cabinet transient and voltage surge protection, clean power filtering, Raw and Clean AC Power Source.

   b. Location. The assembly must be located on the lower right J Panel when viewed from the back door.

   c. Service Terminal Block. The terminals of the Block must be labeled AC+, AC- and EG and must be covered with a clear insulating material to prevent inadvertent contact. The Terminating Lugs must be large enough to accommodate # 2 conductors.

   d. AC+ Raw, AC- Raw and Equipment Ground Bus Termination. This assembly must provide two 8 in. #8 gauge wire extensions for AC- Raw and Equipment Ground, for attachment to the AC- and Ground busses mounted on the "J" panel.

   e. The DC Ground and Equipment Ground Bus must be electrically isolated by 500 Megohms when tested at 250 VDC.

   f. The AC- copper terminal bus must not be grounded to the cabinet or connected to logic ground. Nylon screws with a minimum diameter of 0.25 in. or nylon spacers must be used for securing the bus to the J Panel.

5. Raw/Clean AC Power Assembly. This Assembly must be provided in each cabinet. It must provide Six Clean AC Power Receptacles for assemblies and cabinet units; Raw AC Power to the Output Assemblies; and both logic and power to the Fan and Light system, door opening circuitry and logic interface (all via CCIN and CCOUT Connectors).

   a. Raw/Clean AC Power Extension. The Extension must provide a minimum of five additional NEMA 5-15 receptacles with harness plug connector for plugging into the main assembly. The extension may be an option in Housing #1, and must be required in Cage 2 of the Housing #3.

6. DC Power/Communications Assembly. This assembly must function as the DC Power bus, providing Six VDC BEAU S5404-SB Receptacles and communications interface between the ATC Controller Unit and other assemblies. This assembly must interface with ATC

Controller Unit Logic Lines (Power Down, NRESET and LINESYNC) and Seven System Serial Bus signals via DB-25S Connectors.

a. DC Power/Communications Extension. The Extension must provide additional Serial Bus Connectors and DC Receptacles. The extension may be an option.

b. Terminator Unit. A Serial Bus #1 and #2 Terminator Unit must be provided and plugged into the DC POWER / COMMUNICATIONS ASSEMBLY DB 25S End Connector. The Terminator Unit must provide a 150 ohm termination resistor between the RxD+ and RxD-, the TxD+ and TxD-, the RxC+ and RxC-, and the TxC+ and TxC- pairs for both Serial Bus #1 and Serial Bus #2.

   The Terminator Unit must also provide 1K ohm DC bias resistors from +5VDC ISO to the RxD+, the RxC+, the TxD+, and the TxC+ of both Serial Bus #1 and Serial Bus #2. The Terminator Unit must provide 1K ohm DC bias resistors from ISO GND to the RxD-, the RxC-, the TxD-, and the TxC- of both Serial Bus #1 and Serial Bus #2.

7. Power Distribution Assembly ITS.

a. The Power Distribution Assembly ITS is an EIA-310B rack mounted assembly that provides for the protection and distribution of AC power and DC power. The following must be included:

   (1) Logic control circuits, including a Main Contactor for control of the load circuits;

   (2) Fault sensing field Circuit Breakers, eight for Traffic applications and four for Traffic Management systems.

   (3) Production and distribution of DC power, using +12VDC and 24VDC pluggable power supplies.

   (4) A resident Cabinet Monitor Unit (CMU).

   (5) Maintenance service, consisting of a circuit breaker in line with GFI equipment power receptacles.

   (6) Two Model 204 Flasher Units, protected by a ganged two pole 20 A Circuit Breaker when operating in a Traffic Signal application.

   (7) A 25 Pin D Socket must be provided for communication with the ATC Controller Unit. This Socket must be mated with an 18in. Communications Cable. This Cable must be attached to the Assembly by slotted 4:40 screws. See Serial Bus Harnesses Detail 6-5-39.

   (8) A four position Address Socket and plug must be provided to provide addressing to the CMU.

b. A CDC Connector must be provided on the rear panel of the Output Assembly for isolated signal outputs from the police panel. The CDC Socket is a 9 Pin "D"

connector that contains the Manual Control Enable, Stop Time, Interval Advance, and Manual Flash switch signals. The Manual Control Enable and Manual Flash switch signals must be a 120 VAC signal in series with a 27K Ohm resistor. The Interval Advance and Stop Time switch signals must be 12 VAC signals from a transformer located in the PDA. The secondary output of the 12 VAC transformer must be tied to AC- RAW. CDC pin 5 Common must be referenced to AC- RAW. CDC pins 8 must provide an interface for the external reset signal and 9 must provide an interface for DC Ground.

c. The PDA must be provided with eight field load circuit breakers and two Model 204 Flasher Units with ganged circuit beaker protection. The Load Circuit Breakers located on the PDA that are used to control the Output Assembly Model 200 Switch Pack Units must have auxiliary switches. The auxiliary switches must "open" when the load breaker has tripped and the system will transfer the power from the Main Contactor to the Flash or Blank condition.

d. The Amperage Rating of breakers must be shown on the face of the breaker or handle. Breaker function must be labeled below the breakers on the front panel. Ganged Circuit Breakers must be assembled by the circuit breaker manufacturer and certified that their circuit breakers must gang trip.

e. The maintenance equipment circuit must include a 15-Ampere Circuit Breaker in line with GFCI receptacles on both the front and back of the assembly. The back receptacle must be the first with GFCI Protection device as defined in the National Electrical Code. Circuit interruption must occur on 6 milliamperes of ground fault-current and must not occur less than 4 milliamperes of ground-fault current. The front receptacle must be attached to the load side of the GFCI device.

f. The AUTO/FLASH Switch when placed in FLASH position must de-energize the Main Contactor and the Transfer Relays (TR) Coils. When the switch is placed in the AUTO position must energize the Main Contactor and the TR Coils. The switch must be a SPST Control Switch.

g. The DC Power must be brought to the back panel using a BEAU S5404-SB Receptacle. An 18 in. DC Power (DCP) Harness, with sheath, consisting of 4 #18 cables, with a BEAU P5404-LAB Connector on each end, must be provided with the Assembly. The harness must be plugged in to an adjacent plug on the DC/COMM Assembly. See detail 6-5-40 of this specification.

h. Three 36 in. minimum length #8 gauge wires, one black for AC+, one white for AC- and one green or green/yellow for Equipment Ground, must be attached to the rear of the assembly at the AC Raw Power Terminating Block. The cables must be routed between the Service Panel Assembly AC+ terminal, the AC-Bus and the Equipment Ground Bus.

The PDA Assembly must have a resident 18 in. ACP Harness with sheath and strain relief. The other end must contain a BEAU P5412-CCE connector. This harness must

be plugged into the P1 connector on the Raw/Clean AC Power Assembly. The ACP harness must provide Flasher input and AC power to the Switch Packs.

An 18 in. long CC Harness must be provided with sheath and strain relief. When plugged into the Raw/Clean AC Power Assembly (CC IN) this harness must provide AC Raw voltage and control logic between the ITS PDA Assembly and the Police Panel control switches.

An 18 in. long ACCP power cord with strain relief and a NEMA 5-15 plug must provide AC Clean power to the PDA ITS Assembly when plugged into the Raw/Clean Power Assembly.

i. A capacitive load of 1 microFarad at 400 VAC must be provided across each Flasher Unit Output.

8. Input Assembly.

a. The Input Assembly must be an EIA-310B rack mounted assembly providing twelve slots of 22/44 pin PCB sockets. A Model 218 Serial Interface Unit (SIU) must be provided in its location mated to a DIN 96-Pin Connector. The SIU must provide interface and control between the ATC Controller Unit and the input units via System Serial Bus #1 and #2. See Section Model 218 SIU for System Operation and Interface. A 25 Pin D Socket must be provided for communication with the ATC Controller Unit. This Socket must be mated with an 18 in. Communications Cable. This Cable must be attached to the Assembly by slotted 4:40 screws. See Serial Bus Harnesses Detail.

b. The input assembly must be wired to accept Model 222 and 224 ILD Sensor Units, Model 232 Magnetic Sensor Unit, Model 242 and 252 Isolator Units and Slot mounted NEMA Detectors. Each slot connector is a PCB 22/44 Pin Socket type wired for 2 and 4 channel devices. The F and W Unit Output pins must provide the 24 Inputs to the SIU Channel 1 (Serial Bus #1). In addition, NEMA Status inputs must be provided on pins 7 and 20. INBUS must be provided on pin 19 and 21 with four slots address lines matching NEMA pin outs.

c. The SIU Unit must provide 6 detector RESET Outputs, one for every two slots and should the NEMA Status not be required, a RESTART Output from the SIU to the sensor units as a soft reset per channel via pins 7-20. See Input Assembly Wiring Diagram 6-5-37.

d. The INBUS must interface with the SIU Channel 2 to provide communications between "Smart Input Units" and Serial Bus #2. The SIU functions as a hardware driver interface only between the ATC Controller Unit and Input Units installed in the Input Assembly. See Type 218 SIU section 4.

e. A 25 Pin DB Connector must be provided on the left assembly side (rear panel) to interface the assembly (SIU) to the DC/COMM Assembly Serial Bus #1 and #2. A 32

Pin DB (Socket) must be provided for the Test Function. For Test Connector wiring, see Input Wiring Diagrams 6-5-37.

f. Four special function Inputs must be provided via 9-position subminiature D-type connector to the SIU. These are electrically isolated and may handle 12V DC/AC inputs and are referenced to a separate isolated ground. Note: In the ITS Cabinet interface wiring 120 VAC inputs must be routed to the Isolated SIU inputs through a 27K Ohm, 1 watt, resistor located in the PDA ITS Assembly.

g. The assembly height must be 5.25 in. (3 U).

h. An 18 in. harness cable, with strain relief and sheath and terminated with a BEAU S5404-SB connector, must be supplied for interconnect of +24/+12VDC power.

i. Pins D, E, J, K, and L on each PCB Connector slot must be routed to their associated field terminal, i.e. FT1-12 Additionally, an Equipment Ground Lug must be provided on the back panel for termination of a #8 AWG conductor.

j. Each Input Assembly must contain a 4-bit address code plug and socket. The Input Assembly address must be provided by a plug with jumpers installed to produce a binary code 1, 2, 4, and 8. The address receptacle must be installed on the back panel of the Input Assembly, Ground True Logic must be used with Ground True equaling Logic "1". See instructions on Input Assembly Connectors detail 6-5-38.

k. Securing PDB Connectors. All connectors mounted on the PCB must be mechanically secured to the chassis or frame of the unit or assembly.

9. Output Assembly.

a. The Output Assembly must be an EIA-310B rack mounted assembly delivered in six Switch Pack or fourteen Switch Pack configurations. This assembly may provide eighteen load circuits or forty-two load circuits. Either configuration is designed to interface with a plug in Model 200 Switch Pack Unit. The SIU must be provided resident in its connector to provide interface and control. In addition, a Model 214 AMU Unit must be provided in its connector to sense voltage and current for the CMU. A 25 Pin D Socket must be provided for communication with the ATC Controller Unit. This Socket must be mated with an 18 in. Communications Cable. This Cable must be attached to the Assembly by slotted 4:40 screws. See Serial Bus Harnesses Detail 6-5-39.

b. The Model 205 relay units and Program Blocks must be provided to select control and color state of the Emergency Override State (red, yellow, or no indication output). The programming connectors must be Molex Type 1375 or equal. The relay units and program blocks must be mounted on the rear of the Output Assembly. Program Block Pins must be crimped and soldered. The Model 205 transfer relays must be accessible on the rear of the Output Assembly without the use of tools.

c. An Address Plug and Socket must be provided on Output Assembly for defining the Serial Bus #1 and #3 addressing. See 6/14 Pack Output Assembly Connectors Detail.

d. Transformers must be provided on the incoming AC source for each Switch Pack to measure the load current. See AMU Current Sensing.

e. Field Termination must be provided on the rear panel of the assembly consisting of six-position sockets and plugs.

f. Transient suppression must be provided at the field terminals, for the protection of the Switch Packs, on rear panel of the assembly consisting of three nine-position sockets and plugs for a 6 Pack Output Assembly. A 14 Pack Output Assembly requires seven nine-position sockets and plugs. Each socket must provide protection for two Switch Packs. Protection devices must be terminated to Equipment Ground.

g. A Serial Bus #1 DB25 female connector must be provided on the upper left rear panel of the Output Assembly for serial interconnection to the DC Power/Communication Assembly. This Socket must be mated with an 18 in. Communications Cable. This Cable must be attached to the Assembly by slotted 4:40 screws. See Serial Bus Harnesses Detail.

h. A CDC Connector must be provided on the rear panel of the Output Assembly for signal interconnection to the unit. The CDC Socket is a 9 Pin "D" connector. These inputs are electrically isolated and may handle 120 VAC signals when wired to the PDA ITS Assembly and 12 VAC inputs that are referenced to a separate isolated ground. This Cable must be attached to the Assembly by slotted 4:40 screws.

i. Two RJ-11S Connectors must be provided on the rear panel of the Output Assembly for signal interconnection of Serial Bus #3.

j. An Equipment Ground Lug must be provided on the rear panel for termination of a #8 green wire.

k. The 6-Pack Output Assembly height must be 5.25 in. (3 U) and the 14-Pack Output Assembly must be 10-1/2 in.

10. Cabinet Harnesses. Cabinet Harnesses are supplied with each cabinet configuration. See Serial Bus and DCP Harness Details.

11. Fiber Optic Termination Panel. A Fiber Optic Termination Panel shall be supplied with each cabinet configuration. See Fiber Optic Termination Panel Details.

12. The Service Assembly must be an EIA-310B rack mounted assembly providing seven slots of sockets. Three (3) Model 218 Serial Interface Units (SIU) must be provided in their locations mated to DIN 96S-Pin Connectors. Three (3) Model 214 Auxiliary Monitor Unit (AMU) must be provided in their locations mated to DIN 96S-Pin Connectors. One (1) Model 212 Cabinet Monitor Unit (CMU) must be provided in its location mated to a DIN 64S Connector.

I. Cabinet Details.

Cabinet Housings # 1 and # 2 Figure 26
Cabinet Housing # 3 – Detail 1 Figure 27
Cabinet Housing # 3 – Detail 2 Figure 28
Cabinet Cages # 1 and # 2 Figure 29
Cabinet Cage to Housing # 1 and # 2 Supports Figure 30
Cabinet Cage to Housing # 3 Supports Figure 31
Cabinet Housing # 2/Adapters and Shipping Pallet Figure 32
"J" Panels – Cage 1 Figure 33
"J" Panels – Cage 2 Figure 34
Controller Shelf/Drawer Support Assembly Figure 35
Service Panel Assembly Cage 1 and 2 Figure 36
Service Panel Assembly Schematic Figure 37
Input Termination Panel Housing #1 Figure 38
AC Clean Module Assembly and Harness Figure 39
Raw/Clean AC Power Assembly and Extension 4 Socket Figure 40
Raw/Clean AC Power Assembly and Extension 2 Socket Figure 41
Raw/Clean AC Power Assembly Wiring Diagram 4 Socket Figure 42
Raw/Clean AC Power Assembly Wiring Diagram 2 Socket Figure 43
DC Power/Communications Assembly and Extension Figure 44
DC Power/Communications Assembly Wiring Diagram Figure 45
PDA 5 IP ITS – Front View Figure 46
PDA 5 EP ITS – Front View Figure 47
PDA 5 IP/EP ITS – Rear View Figure 48
PDA 5 IP ITS/Cabinet – Wiring Diagram Figure 49
PDA 5 EP ITS/Cabinet – Wiring Diagram Figure 50
PDA 5 IP/EP ITS – Connectors Figure 51
6/14 Pack Output Assembly – Front View Figure 52
6/14 Pack Output Assembly – Rear Views Figure 53
6/14 Pack Output Assembly – Wiring Diagram Figure 54
6 Pack O/A – CB/Flasher Diagram and Assignment Note Figure 55
14 Pack O/A – CB/Flasher Diagram Figure 56
6/14 Pack Output Assembly Connectors Figure 57

AMU to Output Assembly Interconnect	Figure 58
Serial Bus #1 and #2 Terminator Unit	Figure 59
Bus Assembly and Shelve Attachment Detail	Figure 60
CDC Harness/Manual Advance Push Button Cable	Figure 61
Service Assembly 1	Figure 62
Service Assembly 2	Figure 63
Input Assembly – Front View	Figure 64
Input Assembly – Rear View	Figure 65
Input Assembly – Wiring Diagram	Figure 66
Input Assembly – Connectors	Figure 67
Serial Bus Harness	Figure 68
DC Power/Police Panel Harnesses	Figure 69
Field Wire Support Bracket/Transient Protector Assembly	Figure 70
Fiber Optic Termination Panel	Figure 71
Police Panel and CC Schematic (CMU Bypass)	Figure 72
Police Panel and CC Schematic General	Figure 73

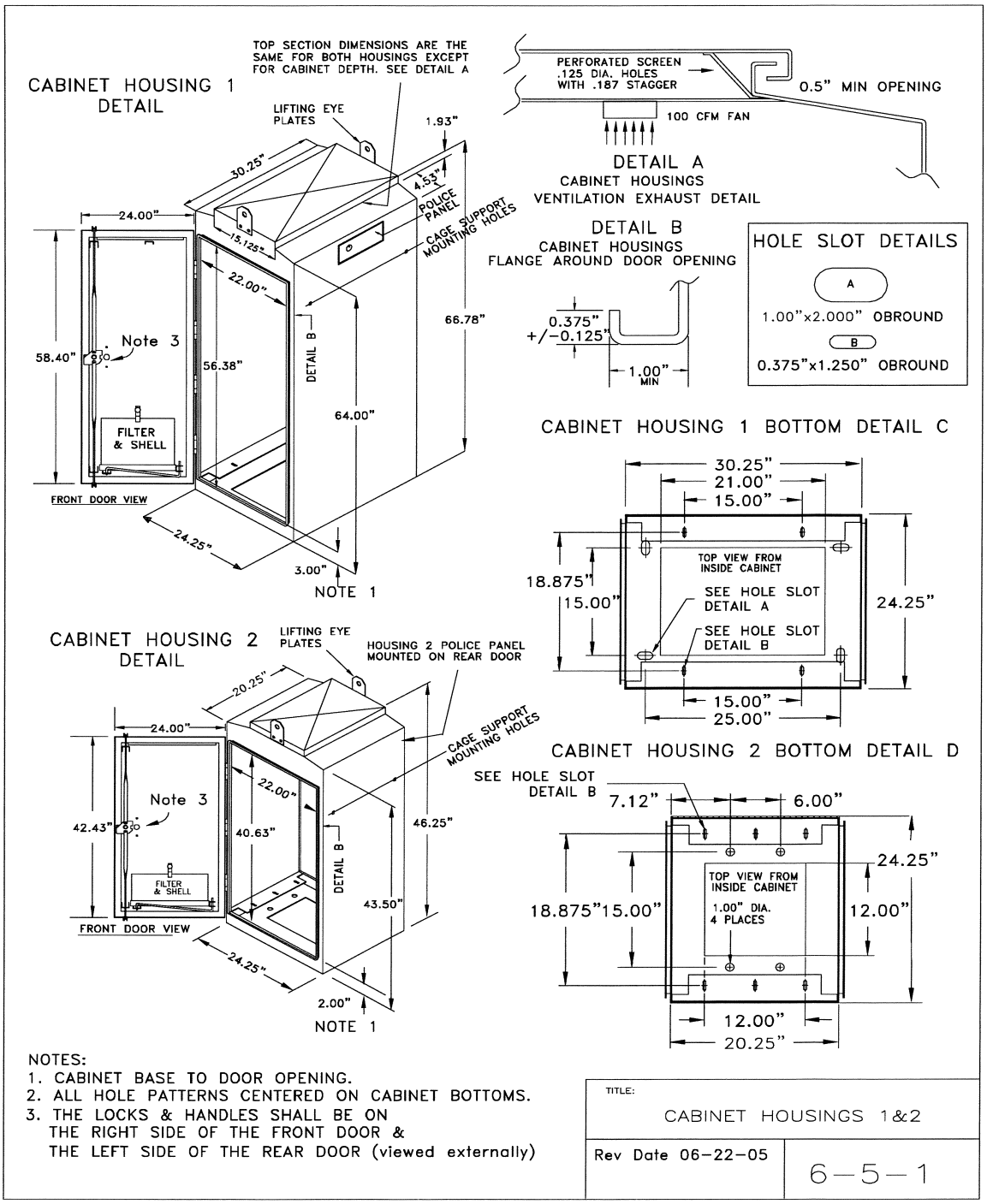

Figure 26
Cabinet Housings # 1 and # 2

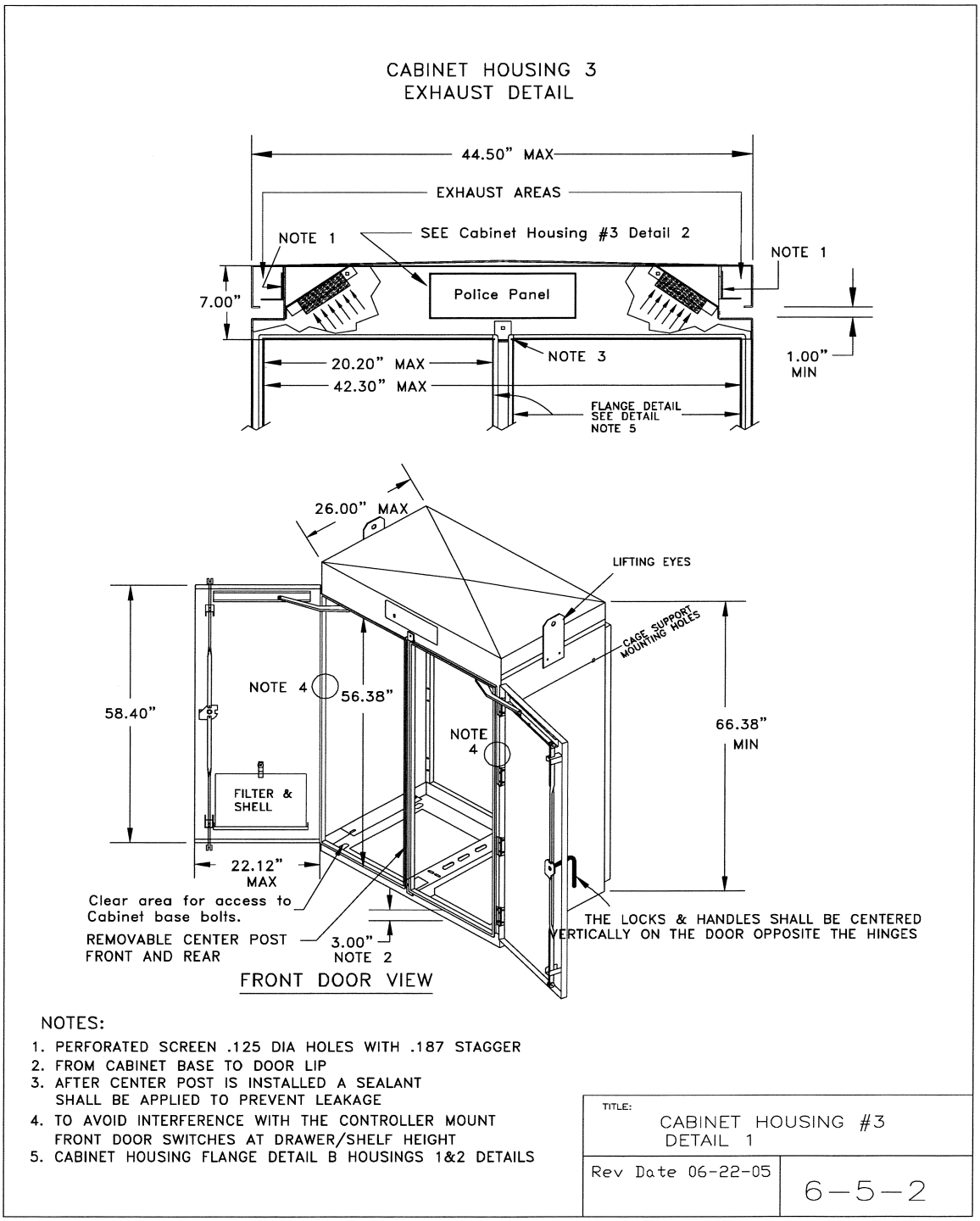

Figure 27
Cabinet Housing # 3 – Detail 1

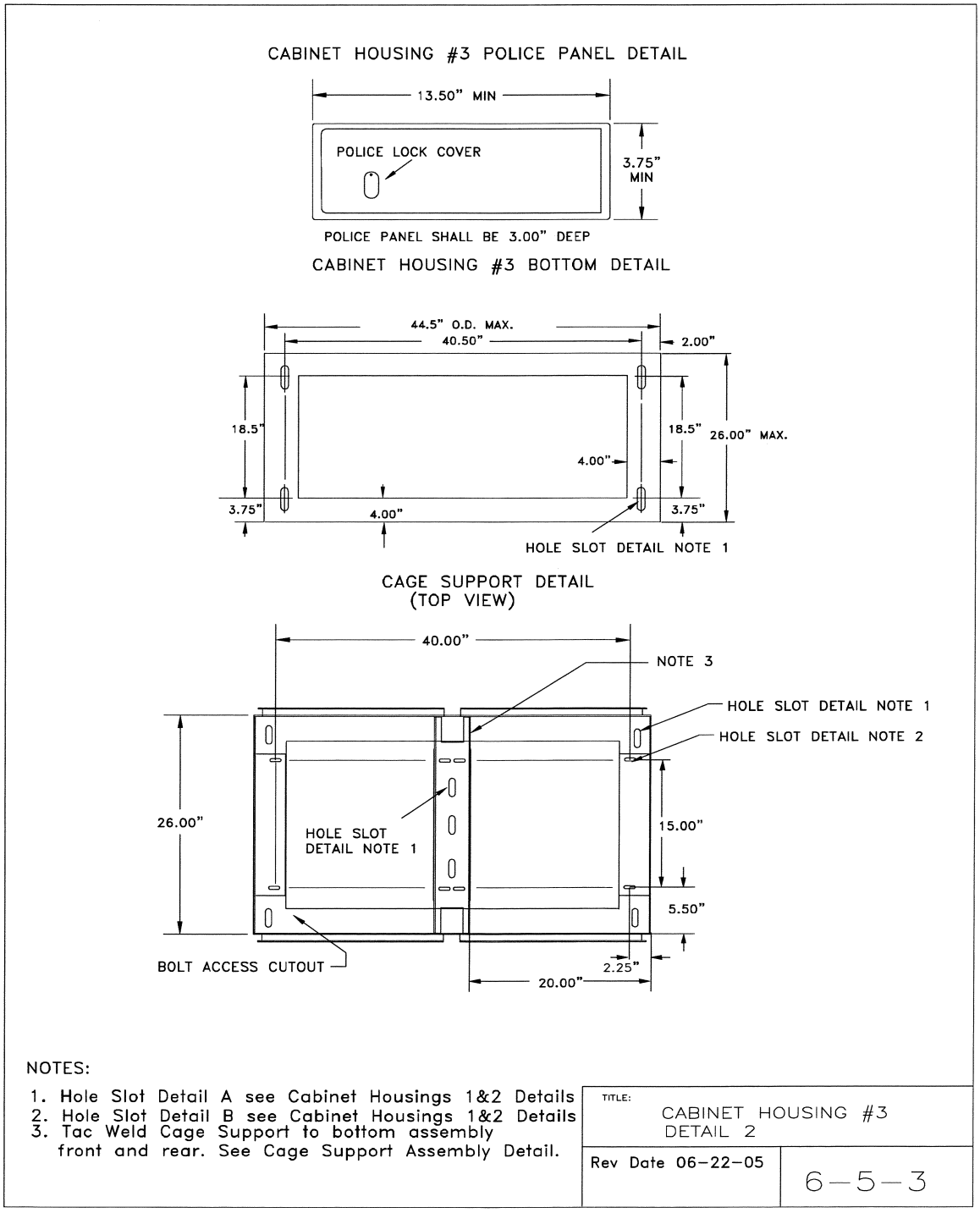

Figure 28
Cabinet Housing # 3 – Detail 2

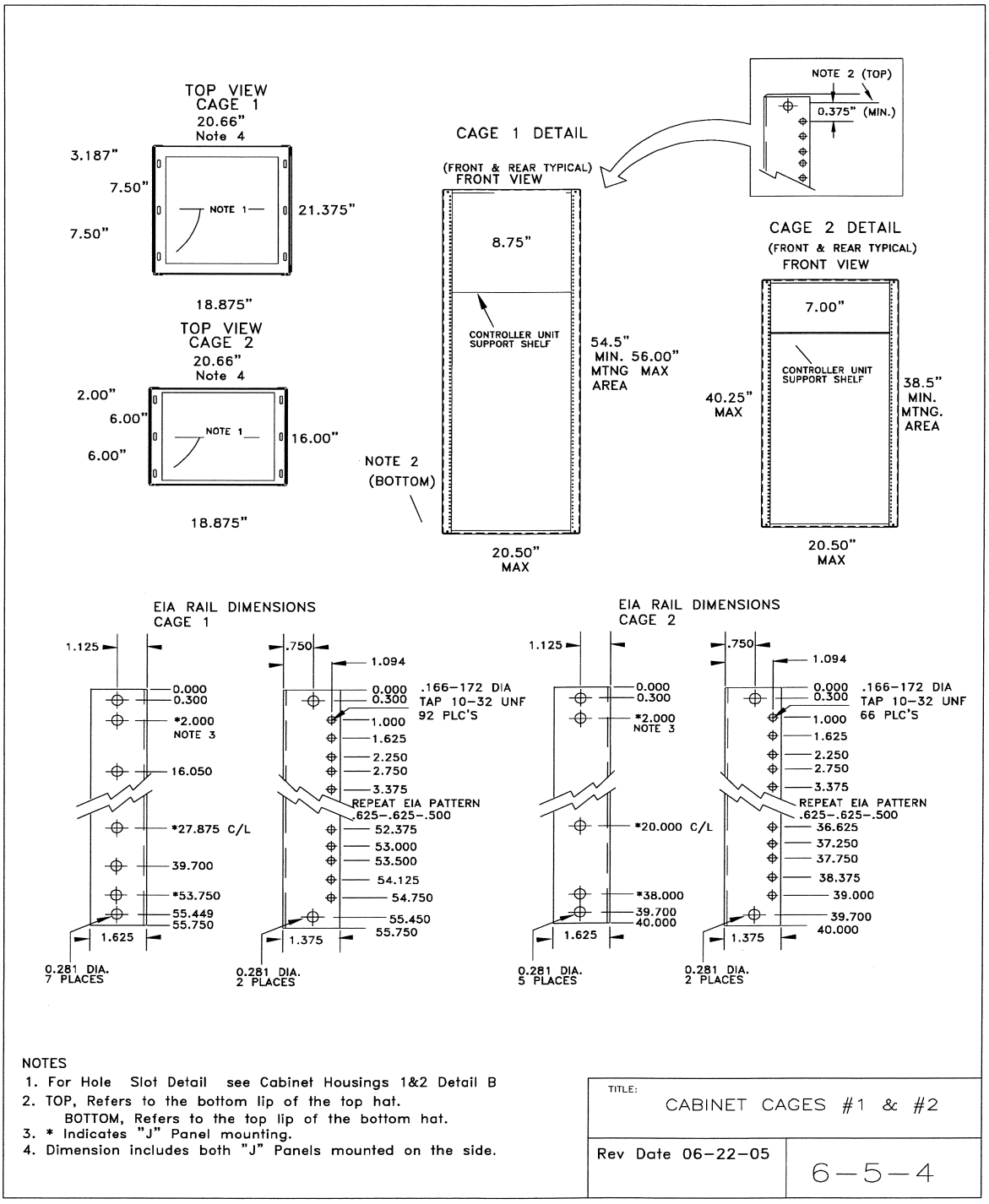

Figure 29
Cabinet Cages # 1 and # 2

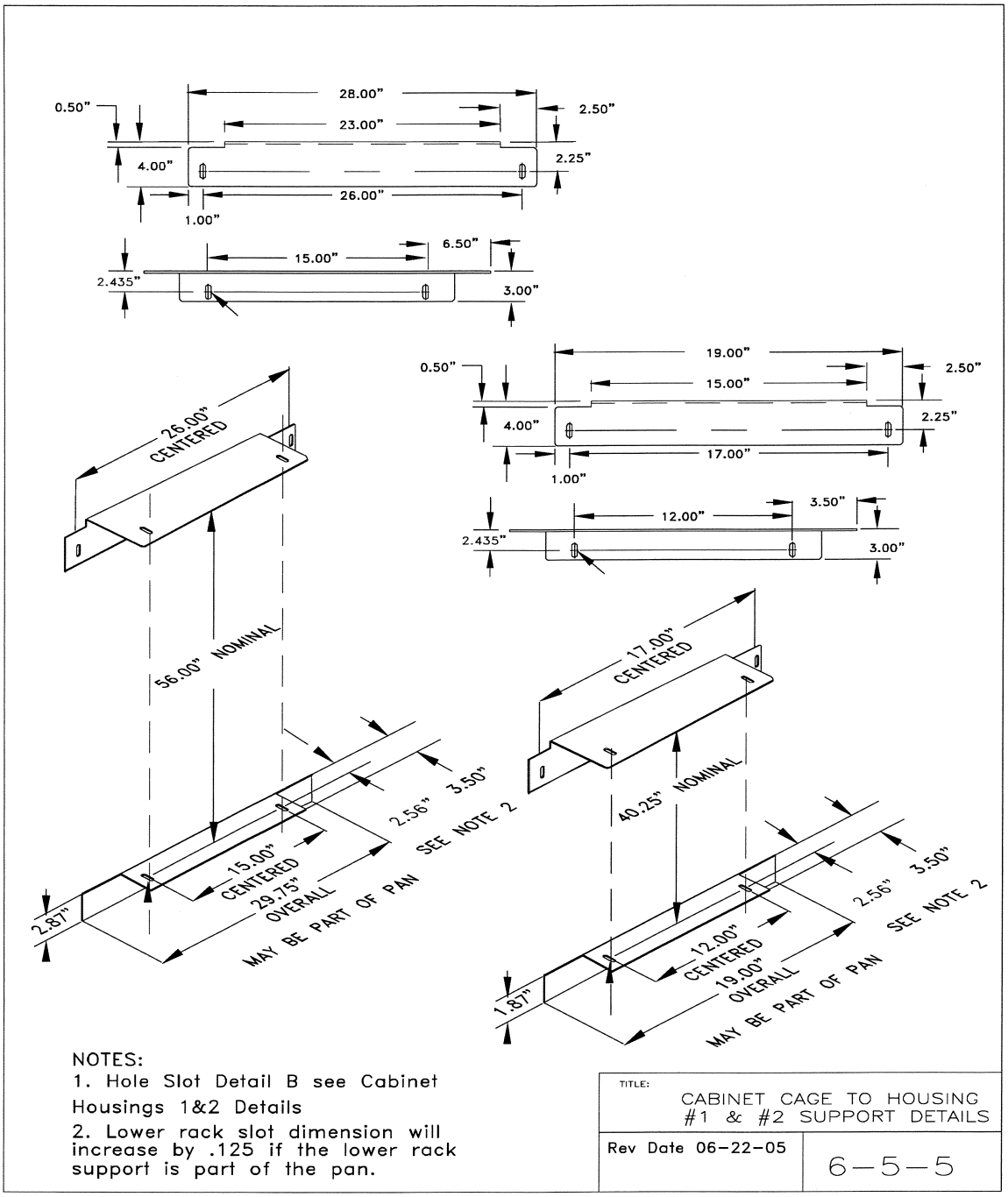

Figure 30
Cabinet Cage to Housing # 1 and # 2 Supports

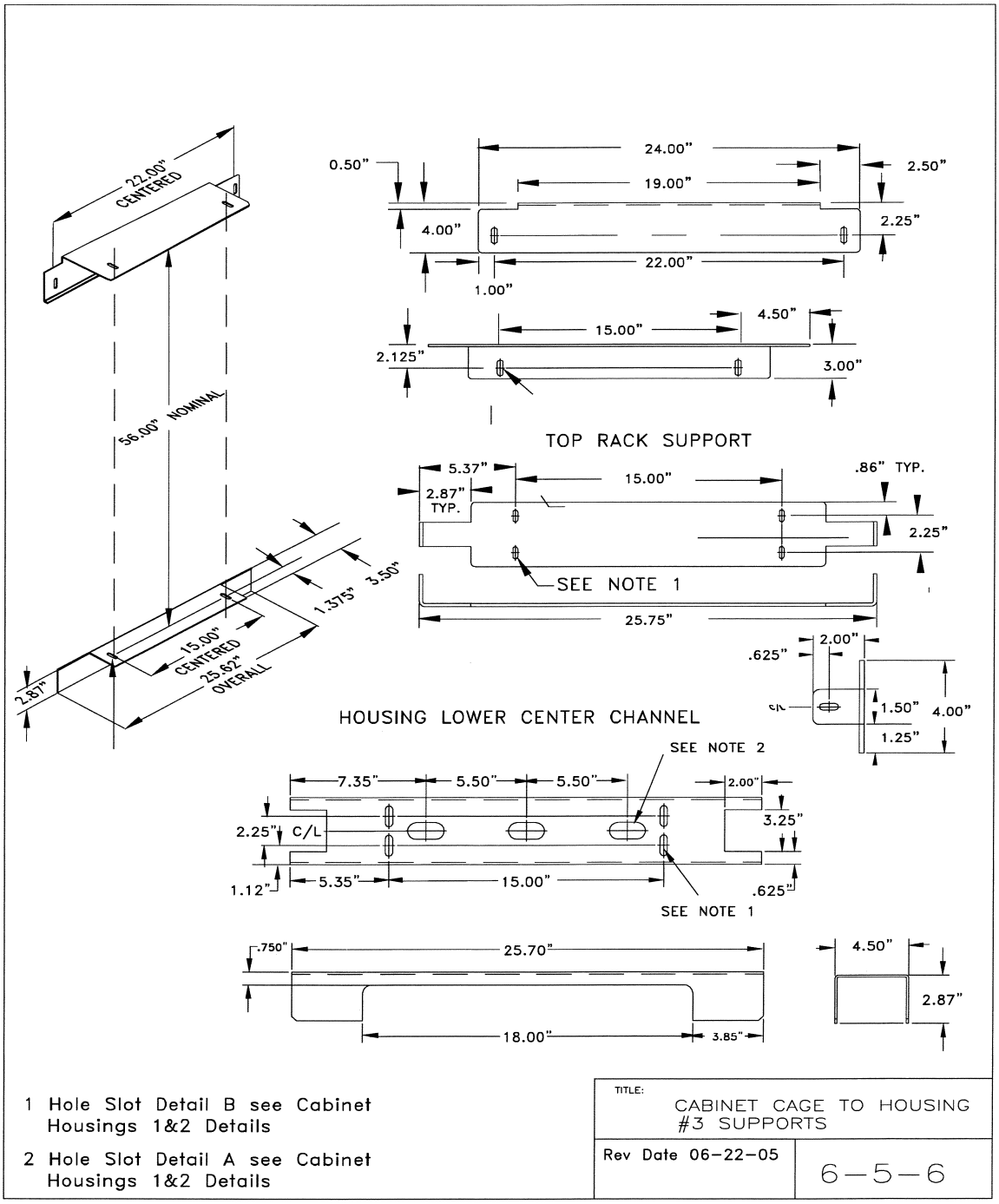

Figure 31
Cabinet Cage to Housing # 3 Supports

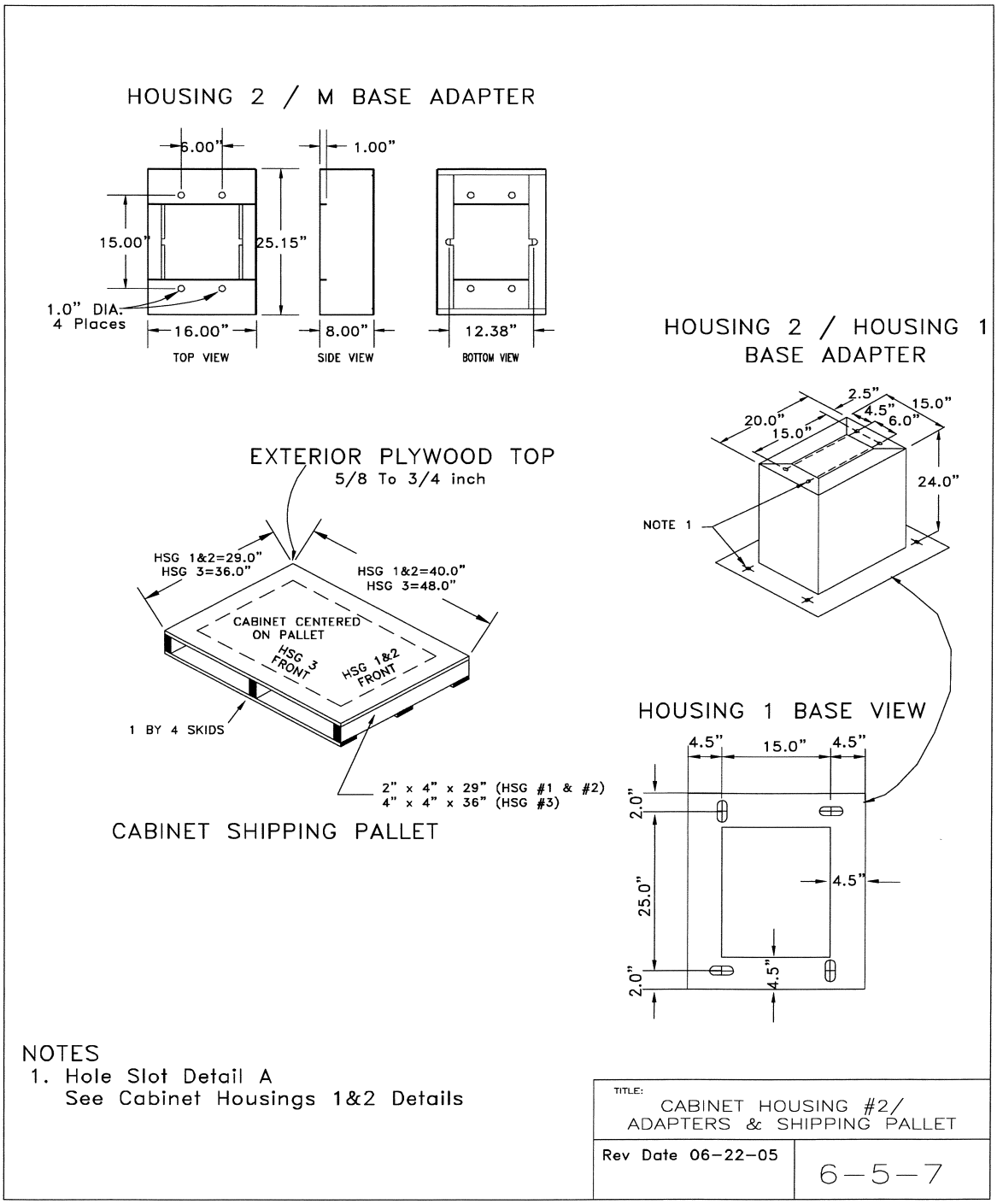

Figure 32
Cabinet Housing # 2/Adapters and Shipping Pallet

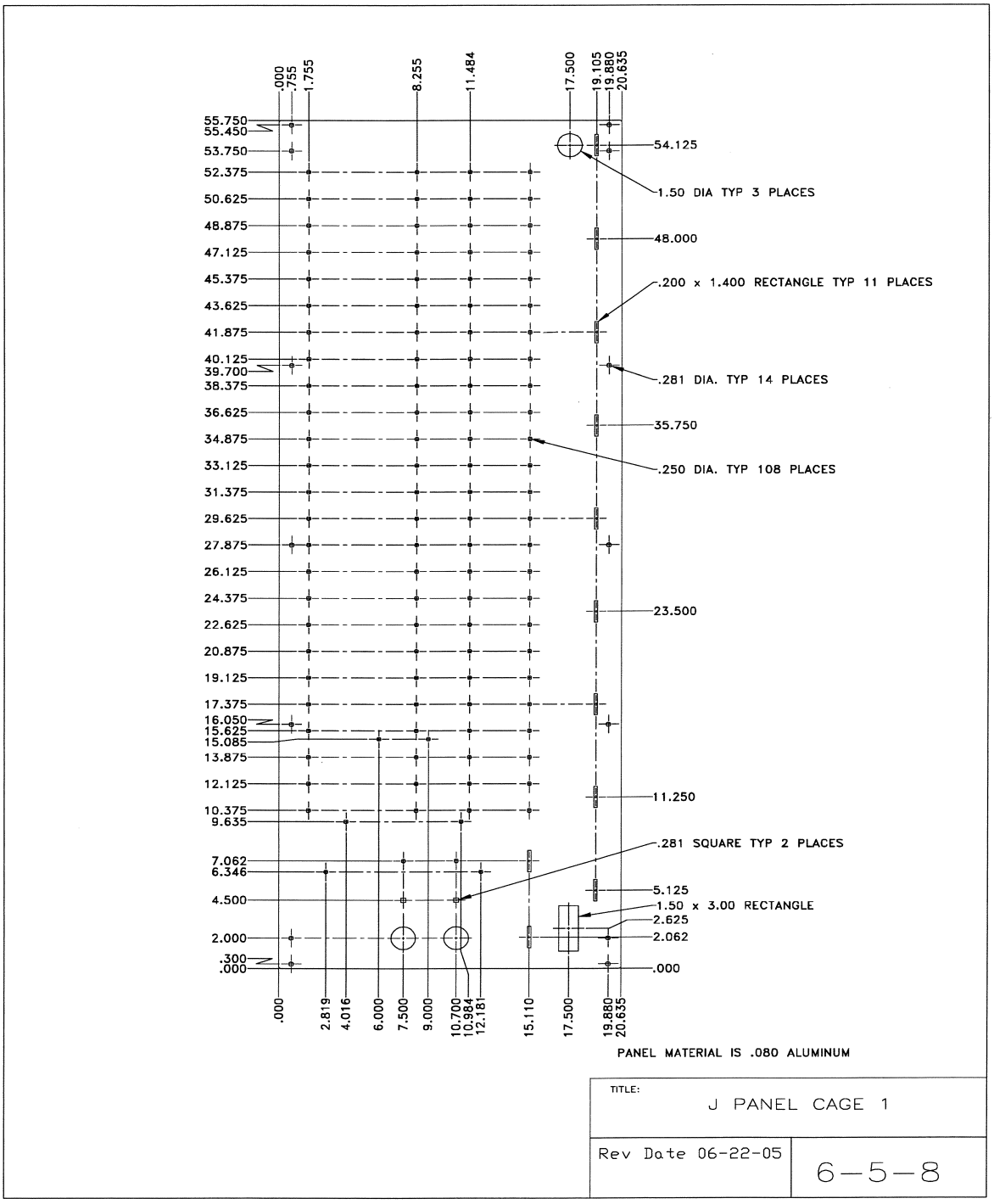

Figure 33
"J" Panels – Cage 1

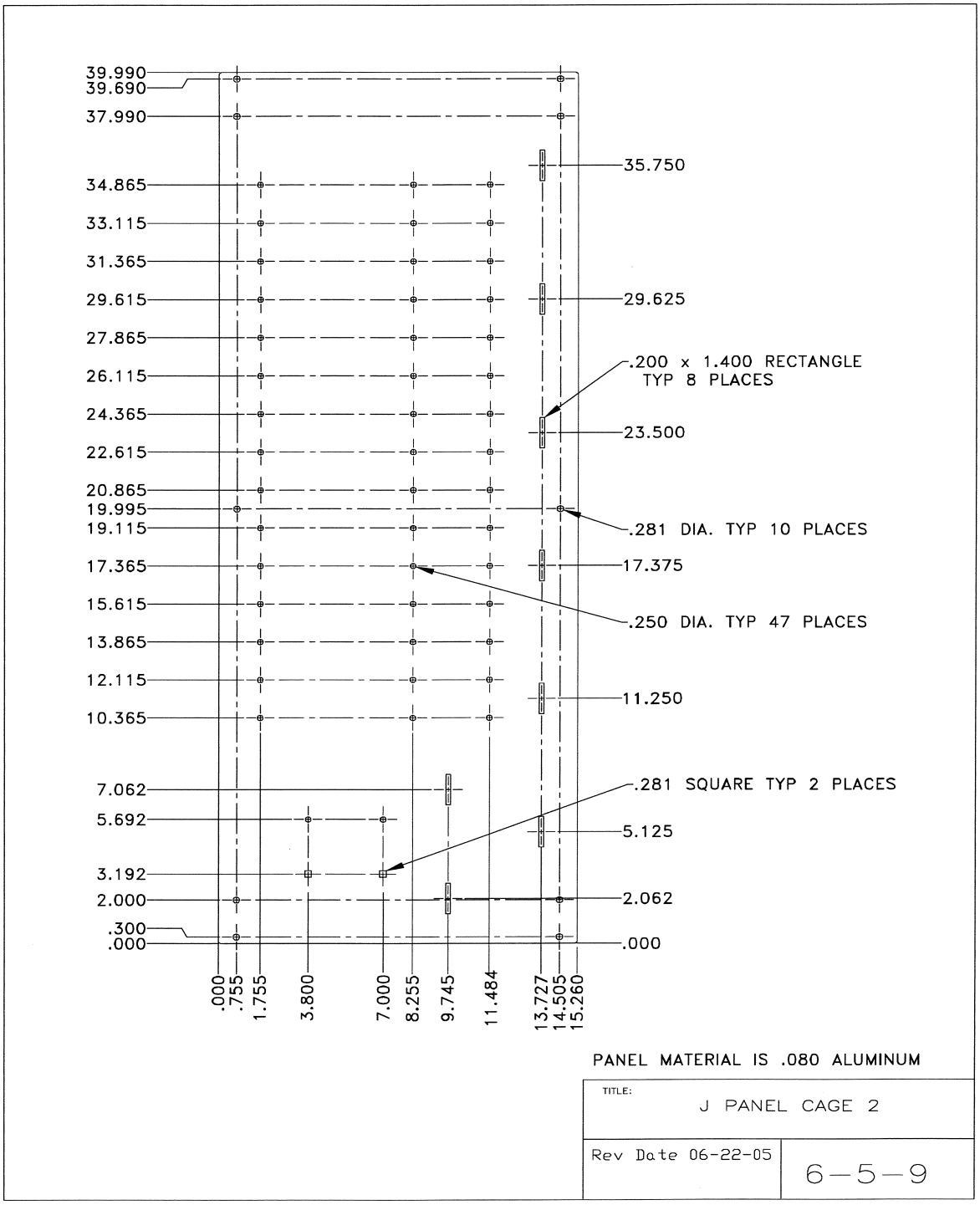

Figure 34
"J" Panels – Cage 2

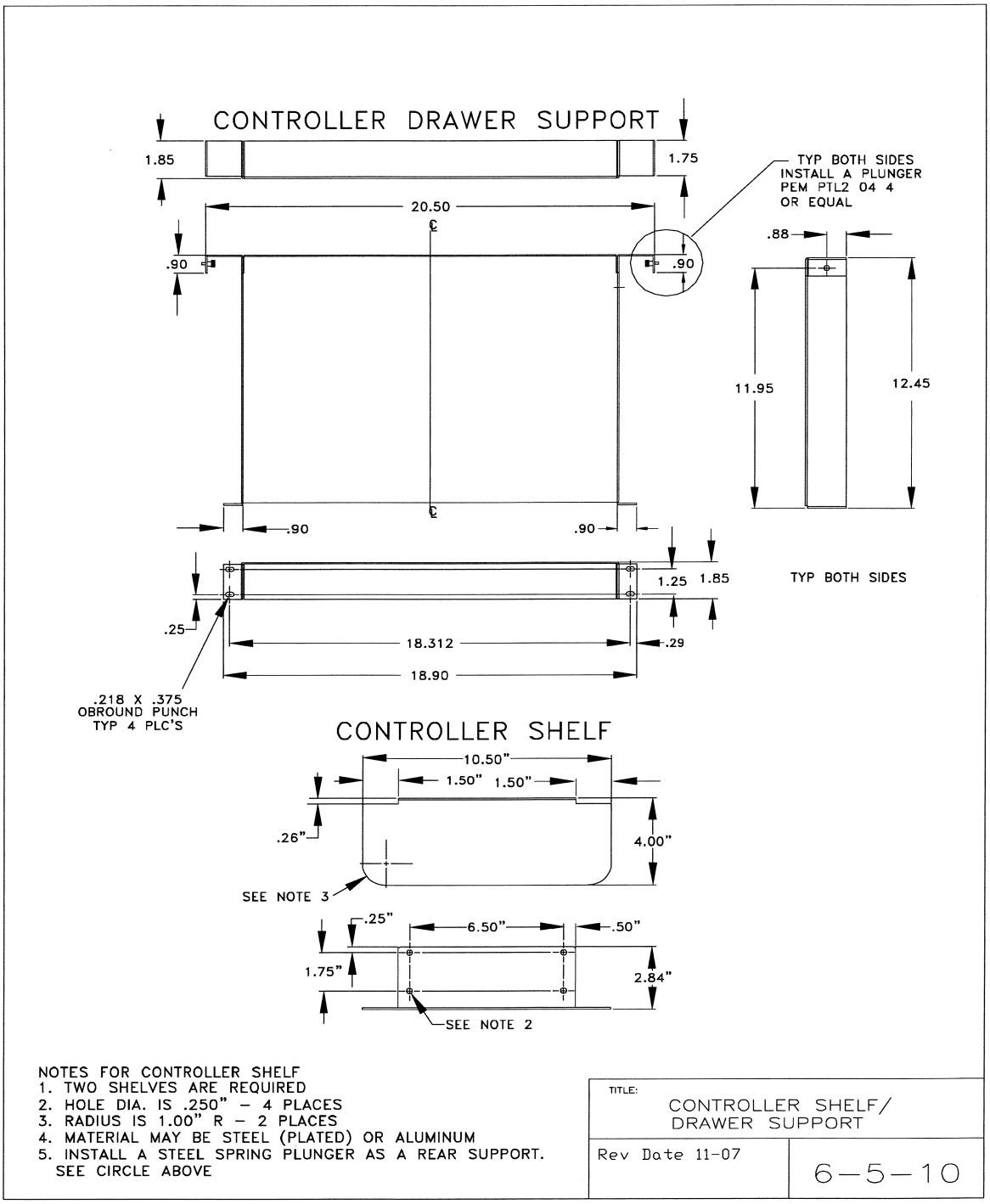

Figure 35
Controller Shelf/Drawer Support Assembly

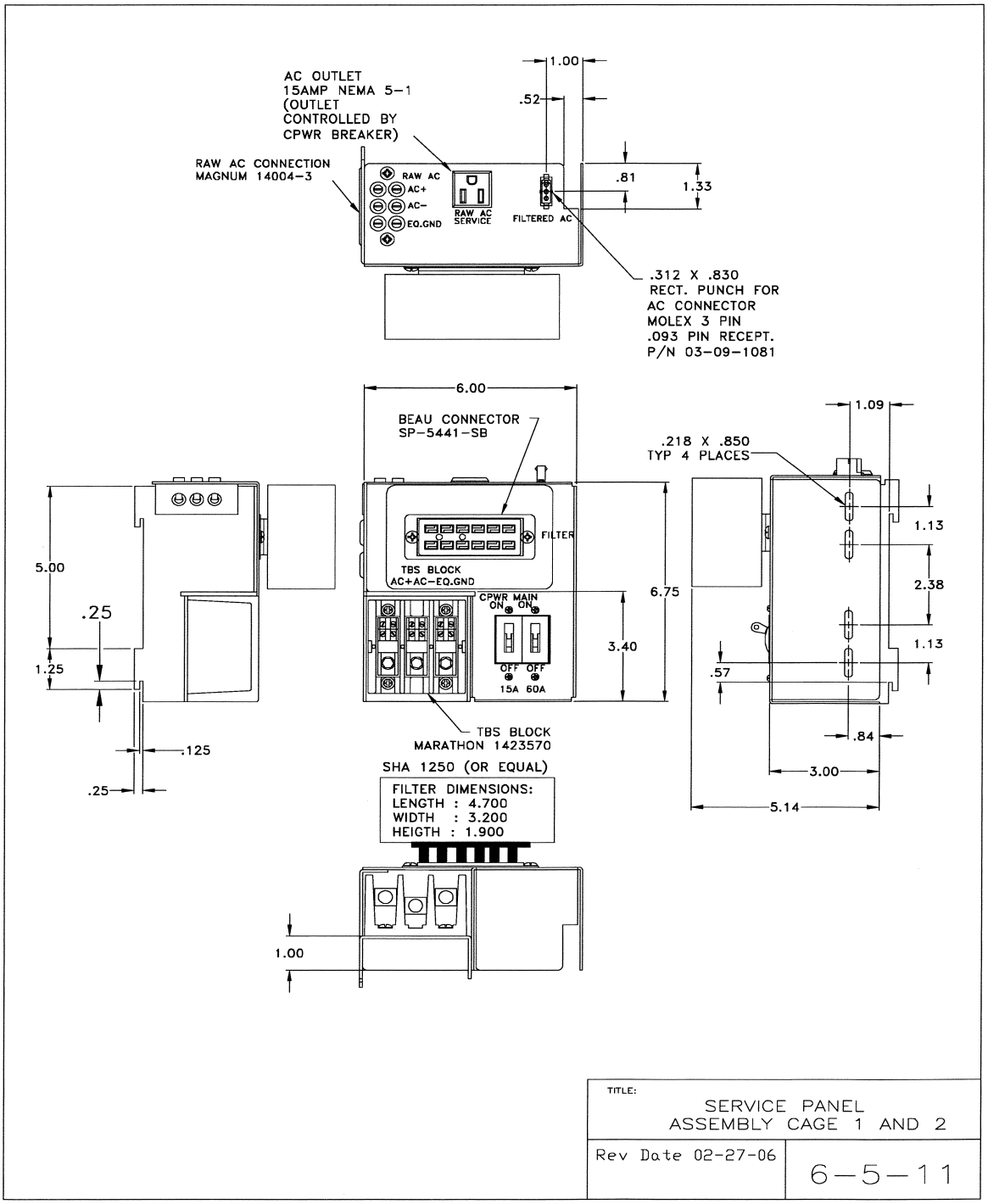

Figure 36
Service Panel Assembly Cage 1 and 2

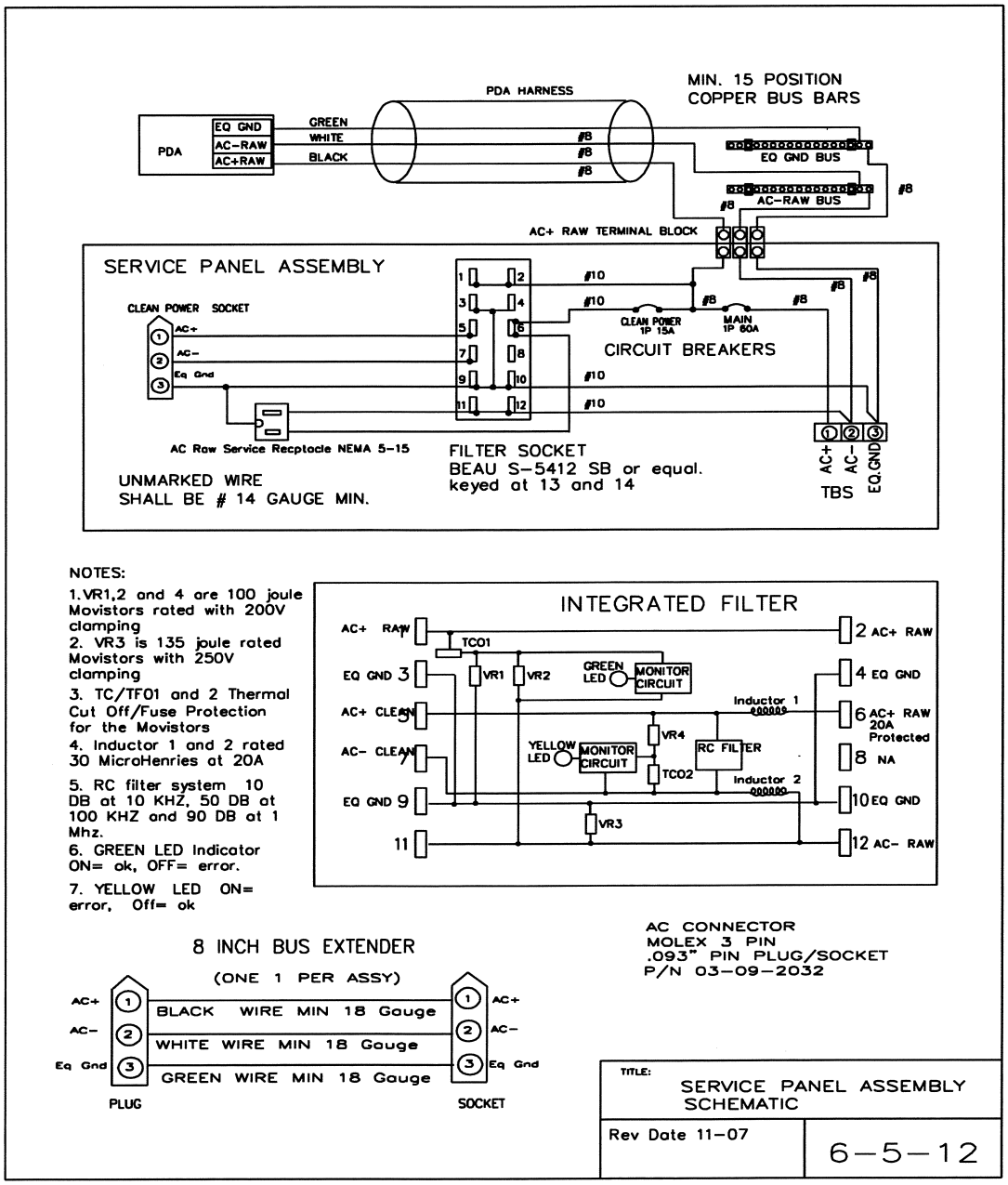

Figure 37
Service Panel Assembly Schematic

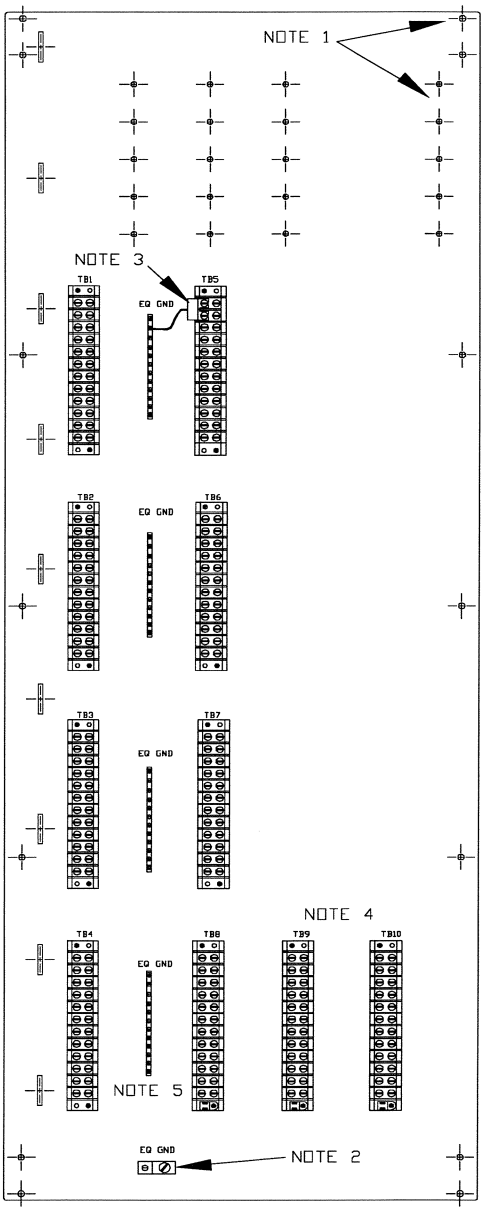

NOTE-1 Slot, mounting holes and shelf holes are the same as the "J" Panel Cage 1 shown on Drawing 6-5-8

NOTE-2 #8 Equipment Ground wire shall be terminated here

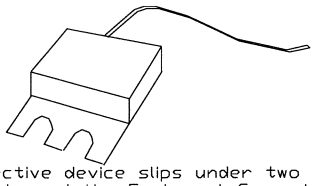

NOTE 3 Protective device slips under two screw terminals and the Equipment Ground pig-tail is attached to the Equipment Ground bus bar.

NOTE-4 10, 12 Position Terminal Blocks are equivalent to Marathon PN 672R212. #8-32 Screw spaced at 9/16"

NOTE-5 Four 10 position Equipment Ground copper bus bars

TITLE: INPUT TERMINATION PANEL HOUSING 1	
Rev Date 06-22-05	6—5—13

Figure 38
Input Termination Panel Housing #1

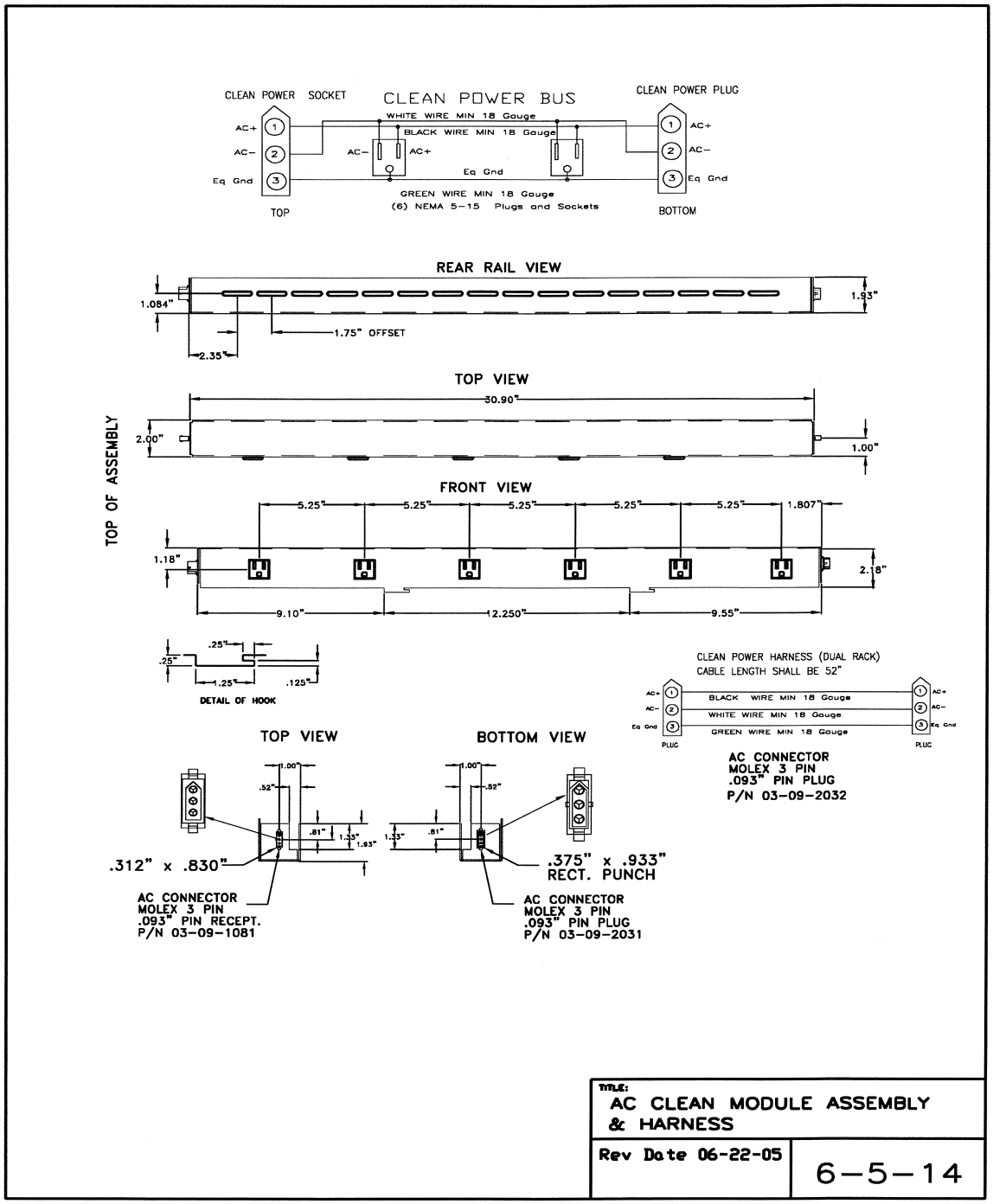

Figure 39
AC Clean Module Assembly and Harness

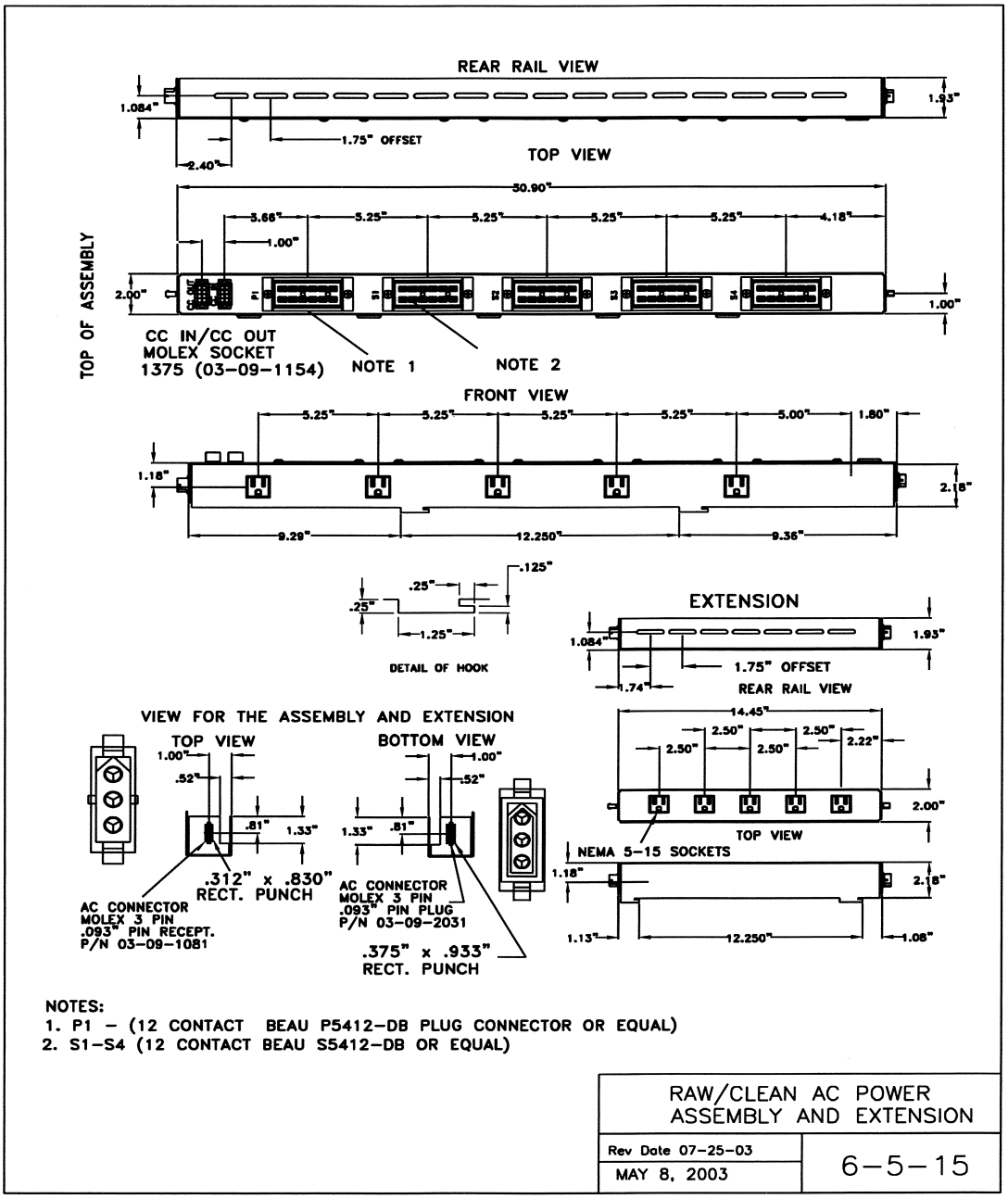

Figure 40
Raw/Clean AC Power Assembly and Extension 4 Socket

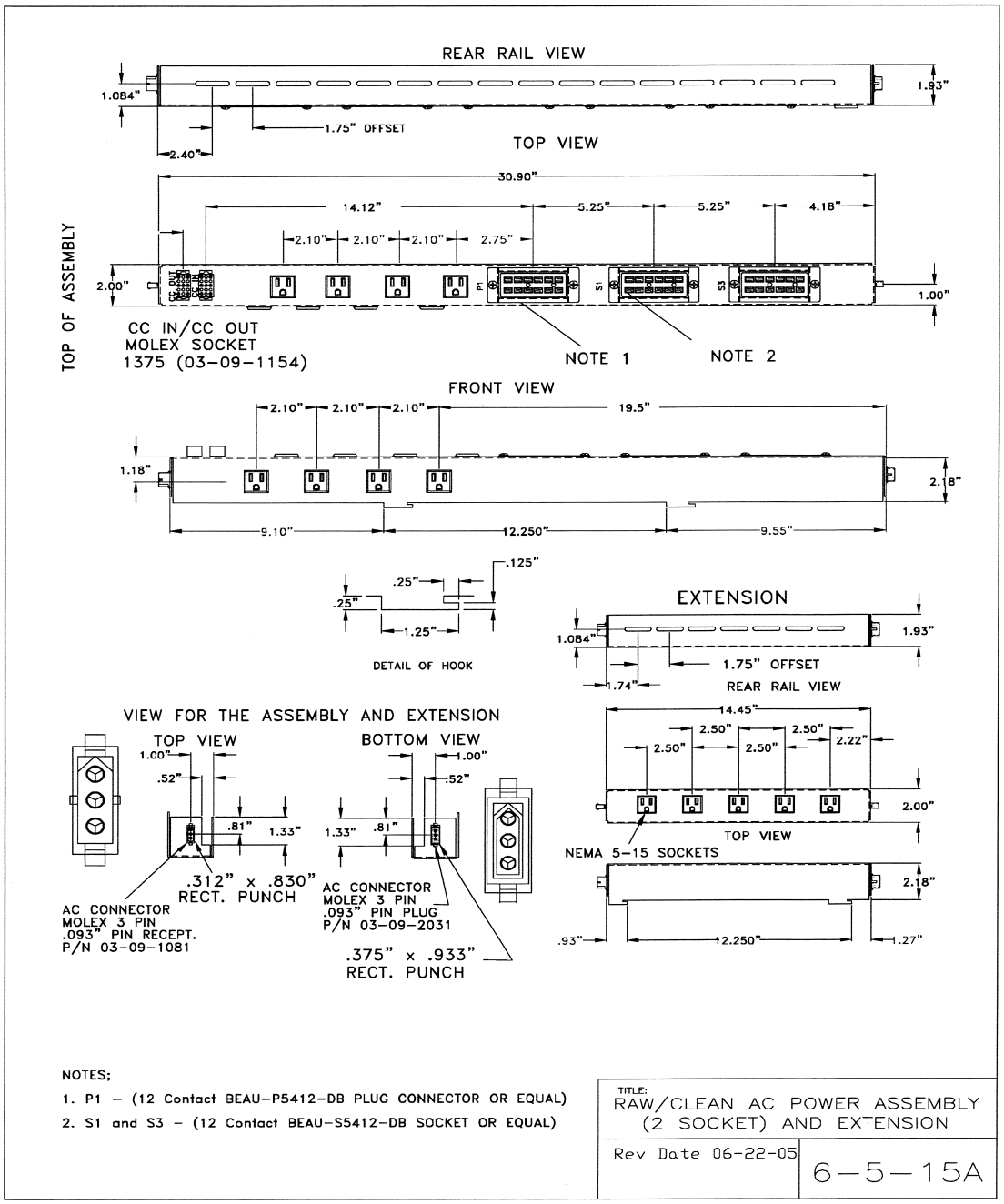

Figure 41
Raw/Clean AC Power Assembly and Extension 2 Socket

CLEAN POWER BUS

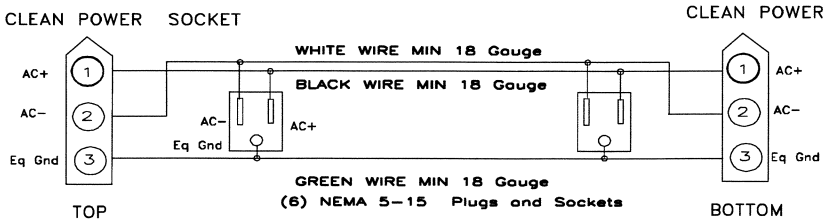

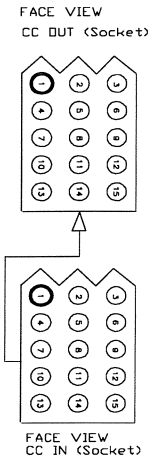

CC (Cabinet) CONNECTOR

Pin #	FUNCTION	Pin #	FUNCTION
CC−1	MC COIL from PP	CC−2	AC+ RAW to PP and Fan
CC−3	TR Coil from PP	CC−4	Signal Flash
CC−5	From Front Door Switch	CC−6	From Auto Flash Switch
CC−7	Annex B Reserved	CC−8	From Rear Door Switch
CC−9	CB trip status CMU to PP	CC−10	AC+ RAW
CC−11	AC− RAW	CC−12	12 VAC to Police Panel
CC−13	MANUAL CONTROL EN in	CC−14	INTERVAL ADV Out
CC−15	STOP TIME Switch		

AC RAW POWER BUS

Pin	P1 INPUT AC	CC IN/OUT	Pin	S1 OUTPUT ASSY 1	Pin	S2 OUTPUT ASSY 2	Pin	S3 OUTPUT ASSY 3		S4 OUTPUT ASSY 4
1	LB1 AC+		1	LB1 AC+	1	LB3 AC+	1	LB5 AC+	1	LB7 AC+
2	LB2 AC+		2	LB2 AC+	2	LB4 AC+	2	LB6 AC+	2	LB8 AC+
3	LB3 AC+		3	FU1-1	3	FU1-2	3	FU1-1	3	FU1-2
4	LB4 AC+		4	FU1-2	4	FU1-1	4	FU1-2	4	FU1-1
5	LB5 AC+		5	FU2-1	5	FU2-2	5	FU2-1	5	FU2-2
6	LB6 AC+		6	FU2-2	6	FU2-1	6	FU2-2	6	FU2-1
7	LB7 AC+		7	LB3 AC+	7		7	LB7 AC+	7	
8	LB8 AC+		8	LB4 AC+	8		8	LB8 AC+	8	
9	FU1-1	To CC-3	9	TR COIL DRIVE	9	TR COIL DRIVE	9	TR COIL DRIVE	9	TR COIL DRIVE
10	FU1-2	To CC-10	10	AC+ RAW	10	AC+ RAW	10	AC+ RAW	10	AC+ RAW
11	FU2-1	To CC-11	11	AC- RAW	11	AC- RAW	11	AC- RAW	11	AC- RAW
12	FU2-2		12	SPARE	12	SPARE	12	SPARE	12	SPARE

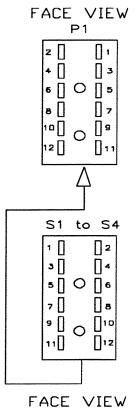

NOTES:

CC IN and CC OUT are parallel wired to S1−S4 to provide AC+ and AC− Raw for use on the AMU's in the Output Panels and the Police Panel.

TITLE:
RAW/CLEAN AC POWER ASSEMBLY
(4 SOCKET) WIRING DIAGRAM

Rev Date 06-22-05

6−5−16

Figure 42
Raw/Clean AC Power Assembly Wiring Diagram 4 Socket

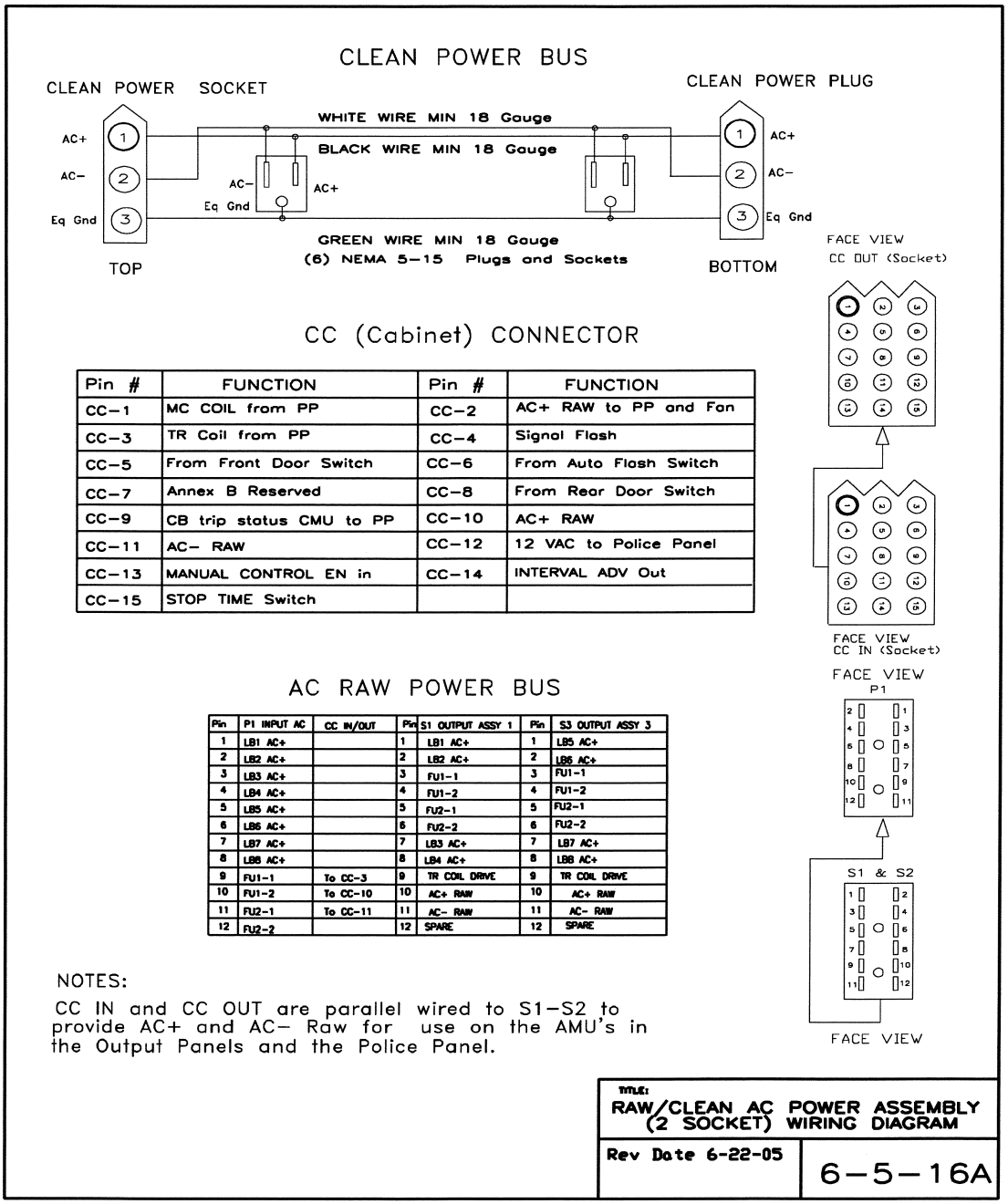

CC (Cabinet) CONNECTOR

Pin #	FUNCTION	Pin #	FUNCTION
CC−1	MC COIL from PP	CC−2	AC+ RAW to PP and Fan
CC−3	TR Coil from PP	CC−4	Signal Flash
CC−5	From Front Door Switch	CC−6	From Auto Flash Switch
CC−7	Annex B Reserved	CC−8	From Rear Door Switch
CC−9	CB trip status CMU to PP	CC−10	AC+ RAW
CC−11	AC− RAW	CC−12	12 VAC to Police Panel
CC−13	MANUAL CONTROL EN in	CC−14	INTERVAL ADV Out
CC−15	STOP TIME Switch		

AC RAW POWER BUS

Pin	P1 INPUT AC	CC IN/OUT	Pin	S1 OUTPUT ASSY 1	Pin	S3 OUTPUT ASSY 3
1	LB1 AC+		1	LB1 AC+	1	LB5 AC+
2	LB2 AC+		2	LB2 AC+	2	LB6 AC+
3	LB3 AC+		3	FU1-1	3	FU1-1
4	LB4 AC+		4	FU1-2	4	FU1-2
5	LB5 AC+		5	FU2-1	5	FU2-1
6	LB6 AC+		6	FU2-2	6	FU2-2
7	LB7 AC+		7	LB3 AC+	7	LB7 AC+
8	LB8 AC+		8	LB4 AC+	8	LB8 AC+
9	FU1-1	To CC-3	9	TR COIL DRIVE	9	TR COIL DRIVE
10	FU1-2	To CC-10	10	AC+ RAW	10	AC+ RAW
11	FU2-1	To CC-11	11	AC- RAW	11	AC- RAW
12	FU2-2		12	SPARE	12	SPARE

Figure 43
Raw/Clean AC Power Assembly Wiring Diagram 2 Socket

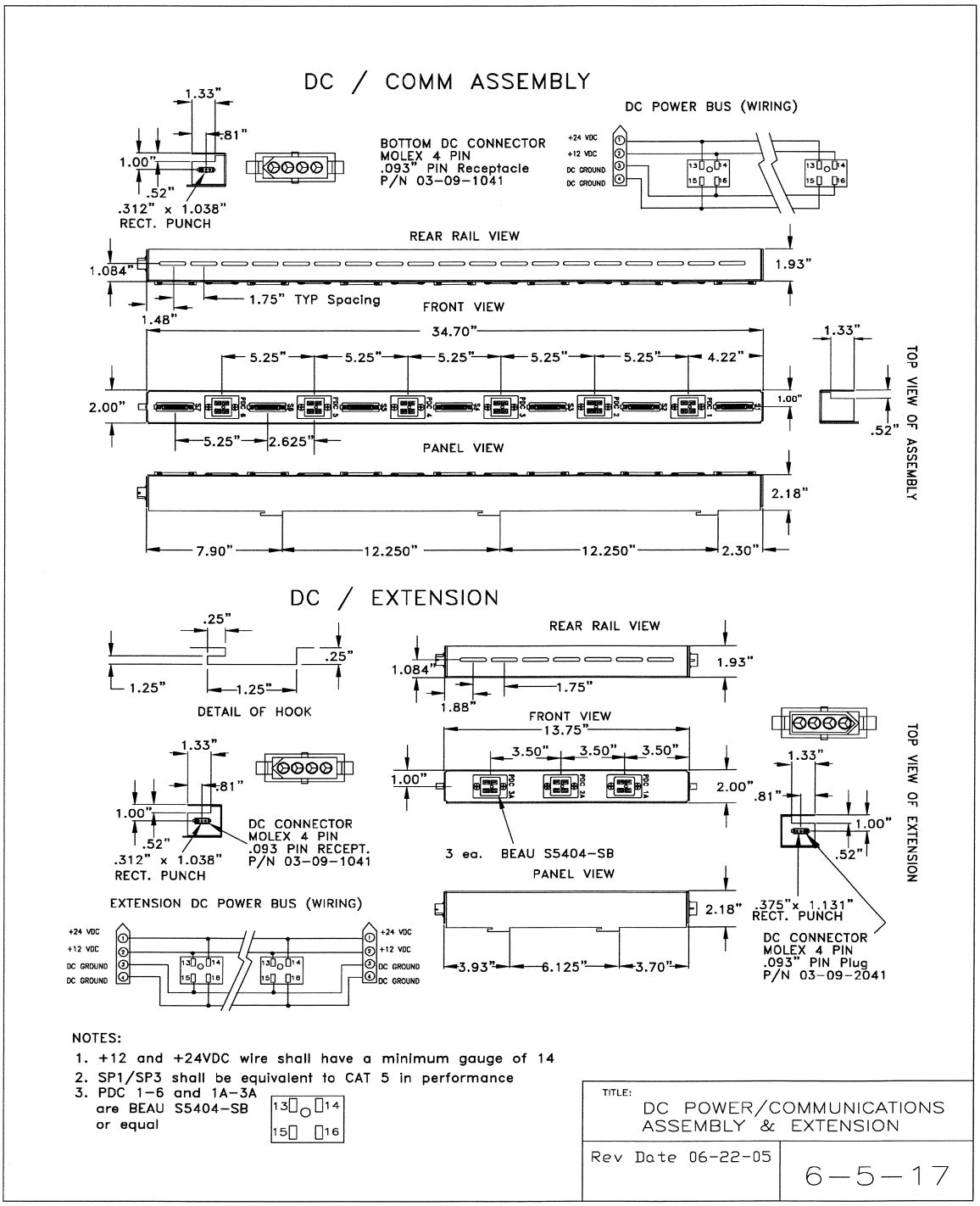

Figure 44
DC Power/Communications Assembly and Extension

COMMUNICATIONS INTERFACE
FOR DC/COMM ASSEMBLY

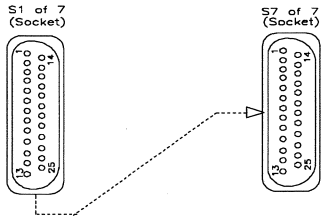

DC/COMM ASSEMBLY (COM WIRING)
S1 through S7 are daisy chained within the assembly
Pins 1/14, 2/15,3/16,4/17,5/18, 6/19,7/20,8/21,9/22,10/23,11/24, 12/25 and 13/spare are twisted pairs within the cable harness.

Pin	AT THE CONTROLLER	Pin	AT THE CONTROLLER
1	SB1 TXD+	14	SB1 TXD−
2	SB1 RXD+	15	SB1 RXD−
3	SB1 TXC+	16	SB1 TXC−
4	SB1 RXC+	17	SB1 RXC−
5	SB2 TXD+	18	SB2 TXD−
6	SB2 RXD+	19	SB2 RXD−
7	SB2 TXC+	20	SB2 TXC−
8	SB2 RXC+	21	SB2 RXC−
9	LINE SYNC+	22	LINE SYNC−
10	NRESET+	23	NRESET−
11	PWR DWN+	24	PWR DWN−
12	+5VDC ISO	25	EQ GND
13	ISO GND		

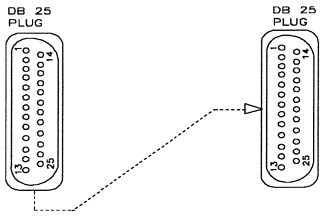

COMM HARNESS EXTENSION CABLE LENGTH 52"

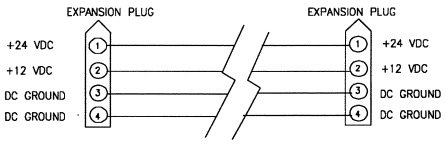

DC POWER EXTENSION CABLE PLUGS
MOLEX 4 PIN .093" PLUG
P/N 03-09-2042
CABLE LENGTH IS 52"

DC POWER BUS EXTENSION CABLE

NOTES:

1. DC power cable shall be 14 Gauge Minimum.
2. Communications Interface shall meet CAT 5 electrical characteristics
3. DC Power/Communications Assembly DB25 D Sub Connectors shall be mounted with 4-40 jack female sockets

TITLE: COMM ASSEMBLY WIRING
COMM EXTENSION CABLE
DC POWER EXTENSION CABLE

Rev Date 06-22-05

6-5-18

Figure 45
DC Power/Communications Assembly Wiring Diagram

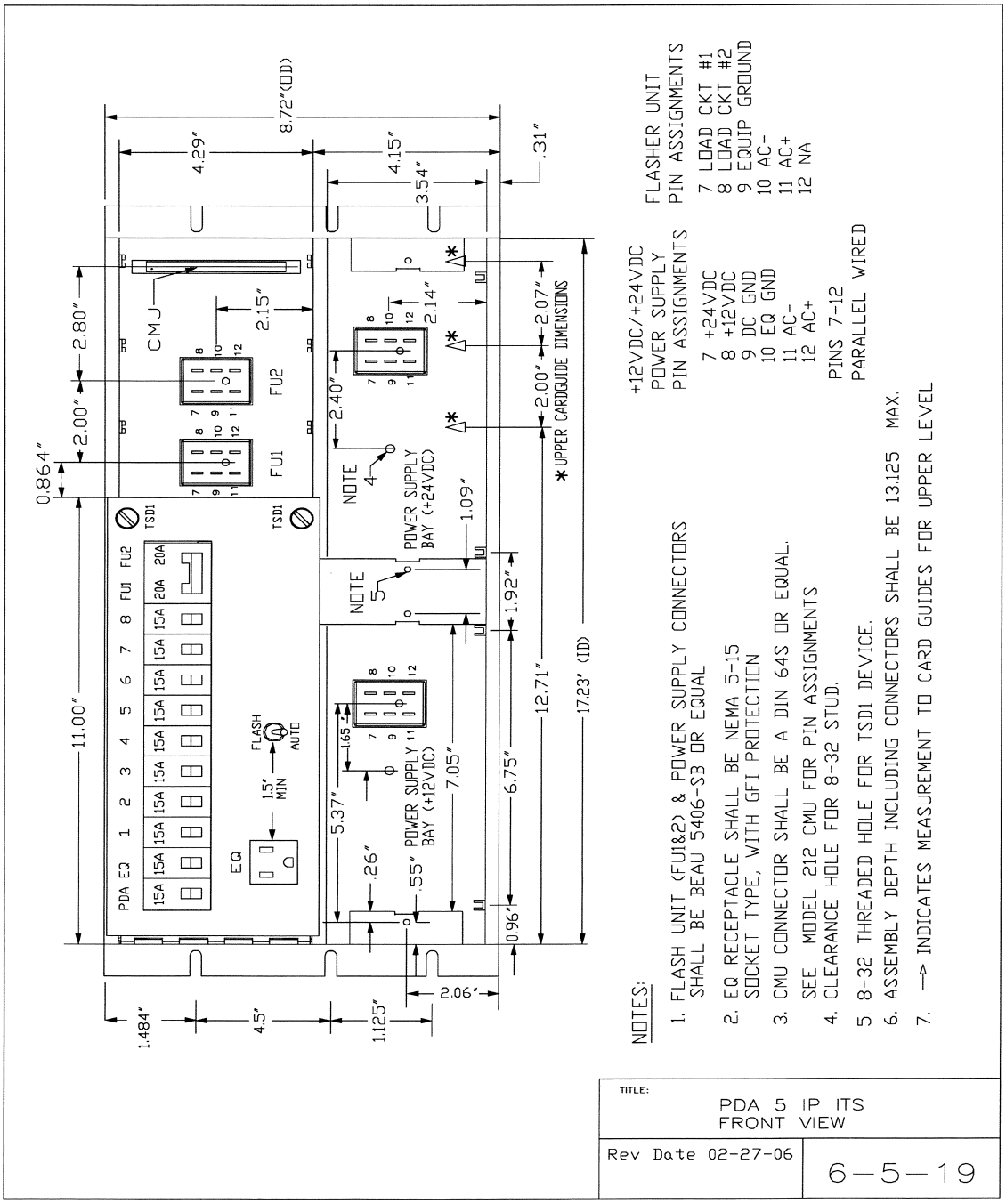

Figure 46
PDA 5 IP ITS – Front View

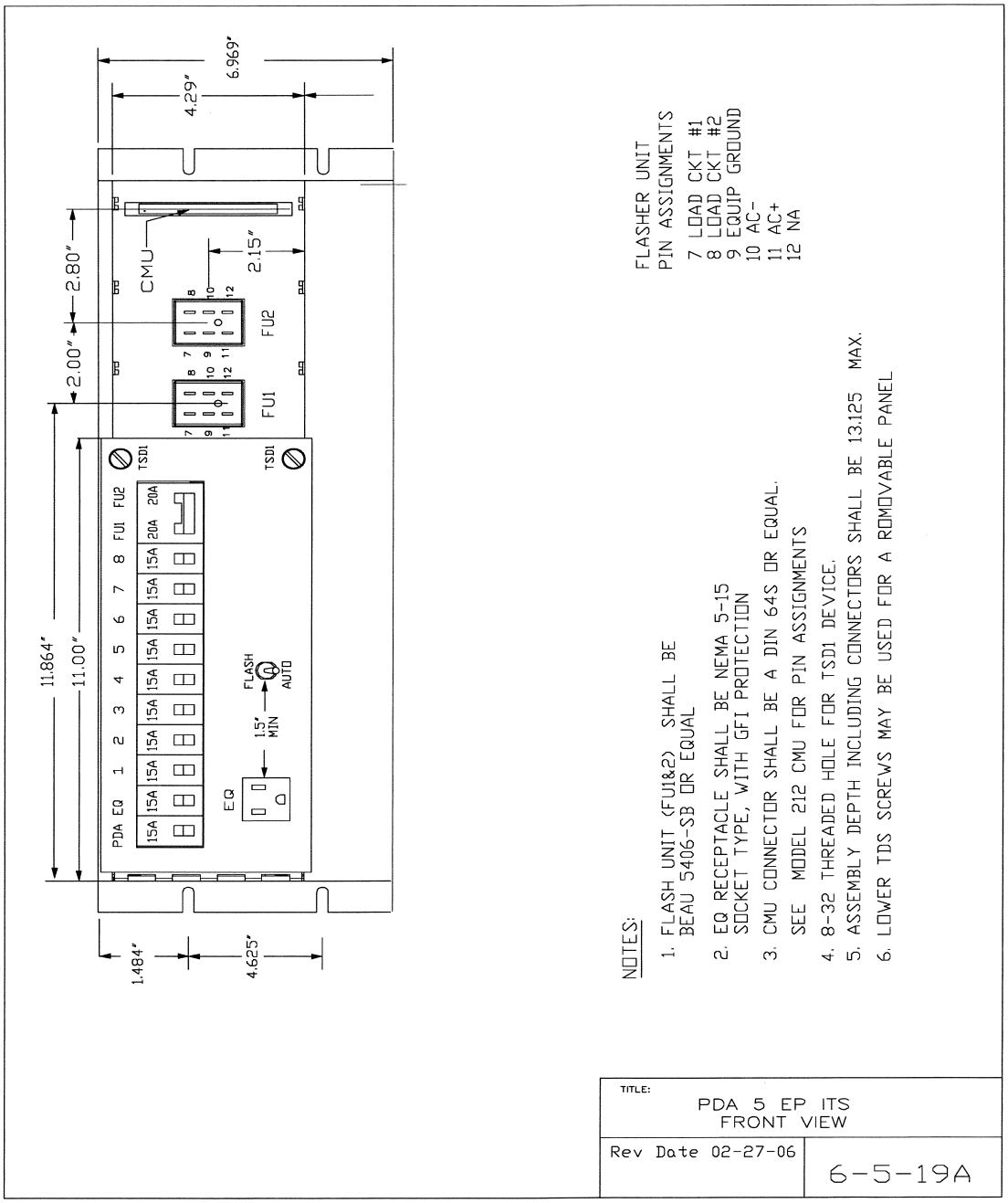

Figure 47
PDA 5 EP ITS – Front View

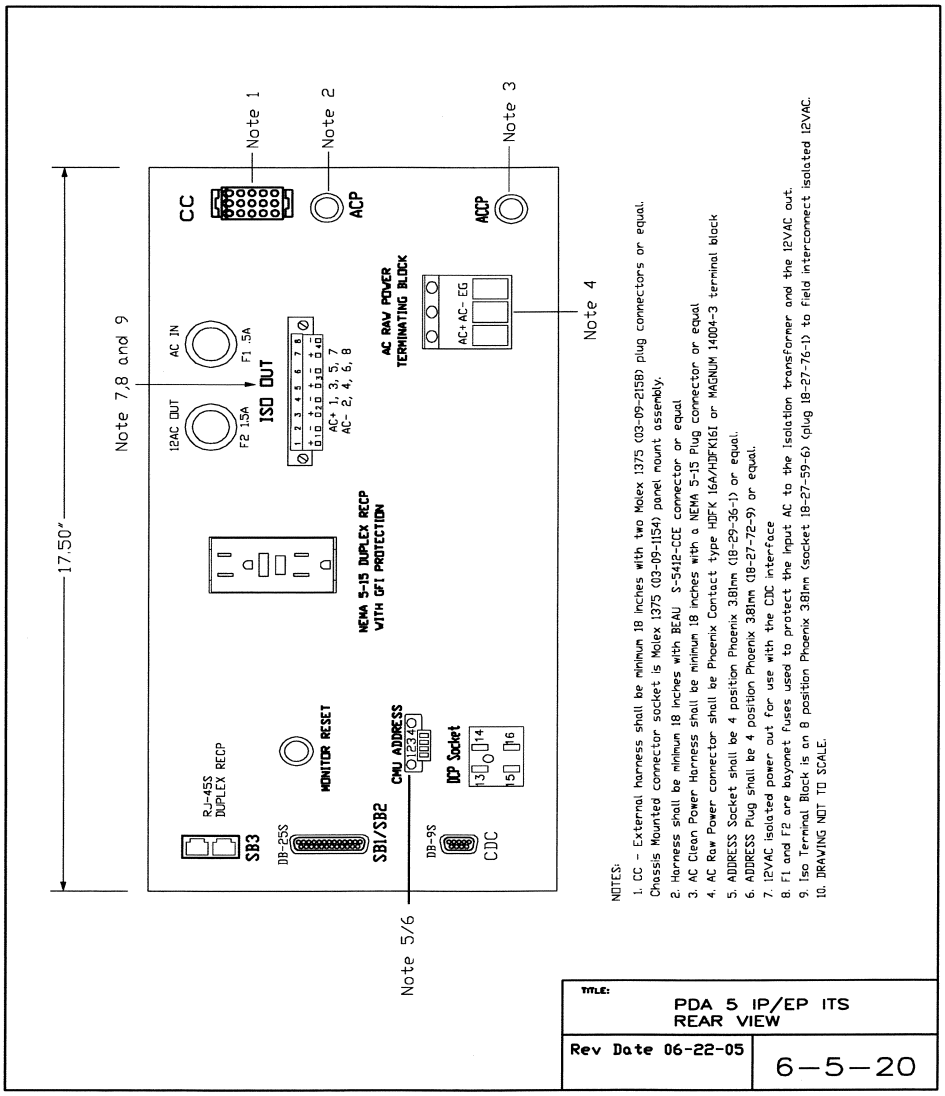

Figure 48
PDA 5 IP/EP ITS – Rear View

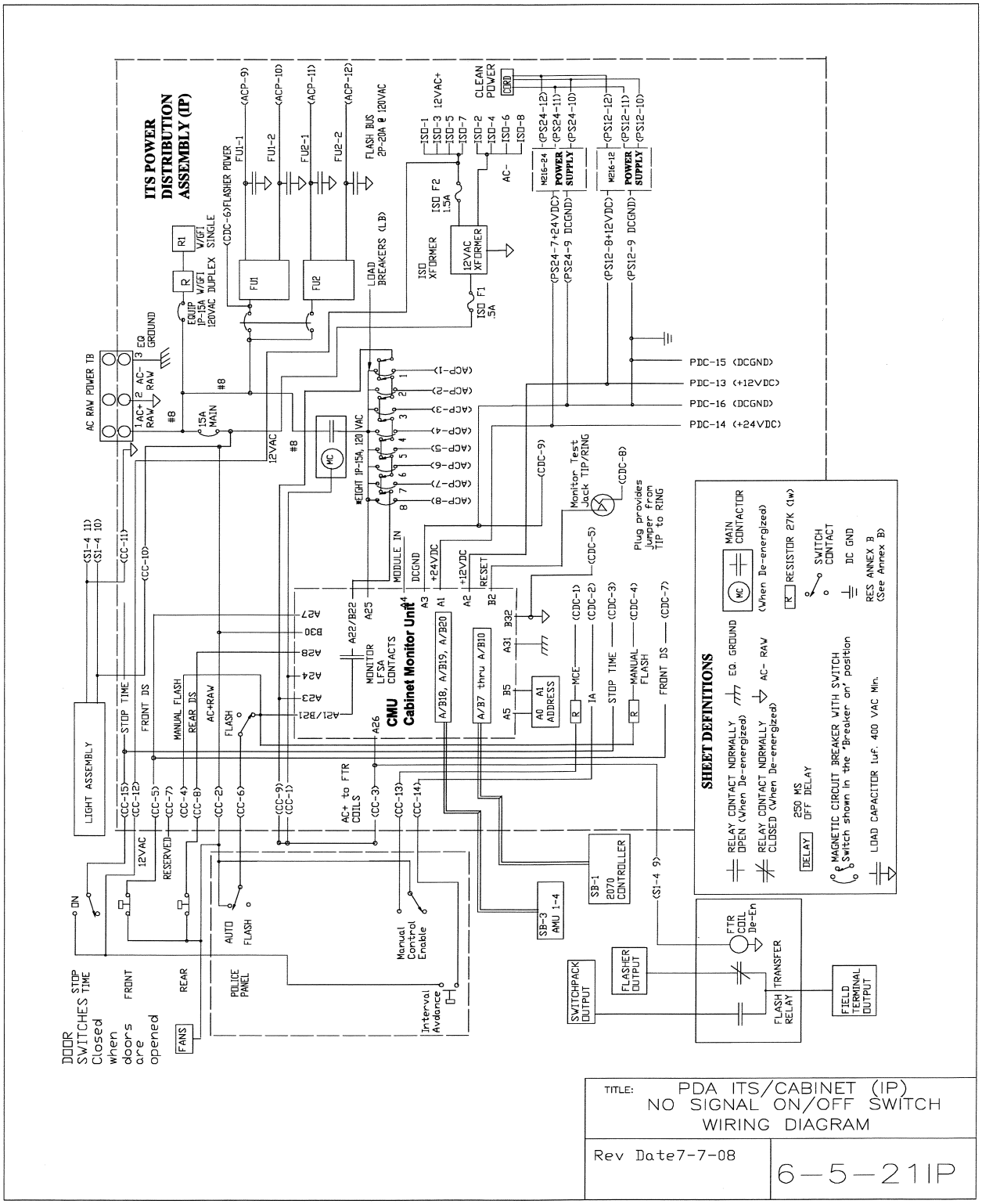

Figure 49
PDA 5 IP ITS/Cabinet – Wiring Diagram

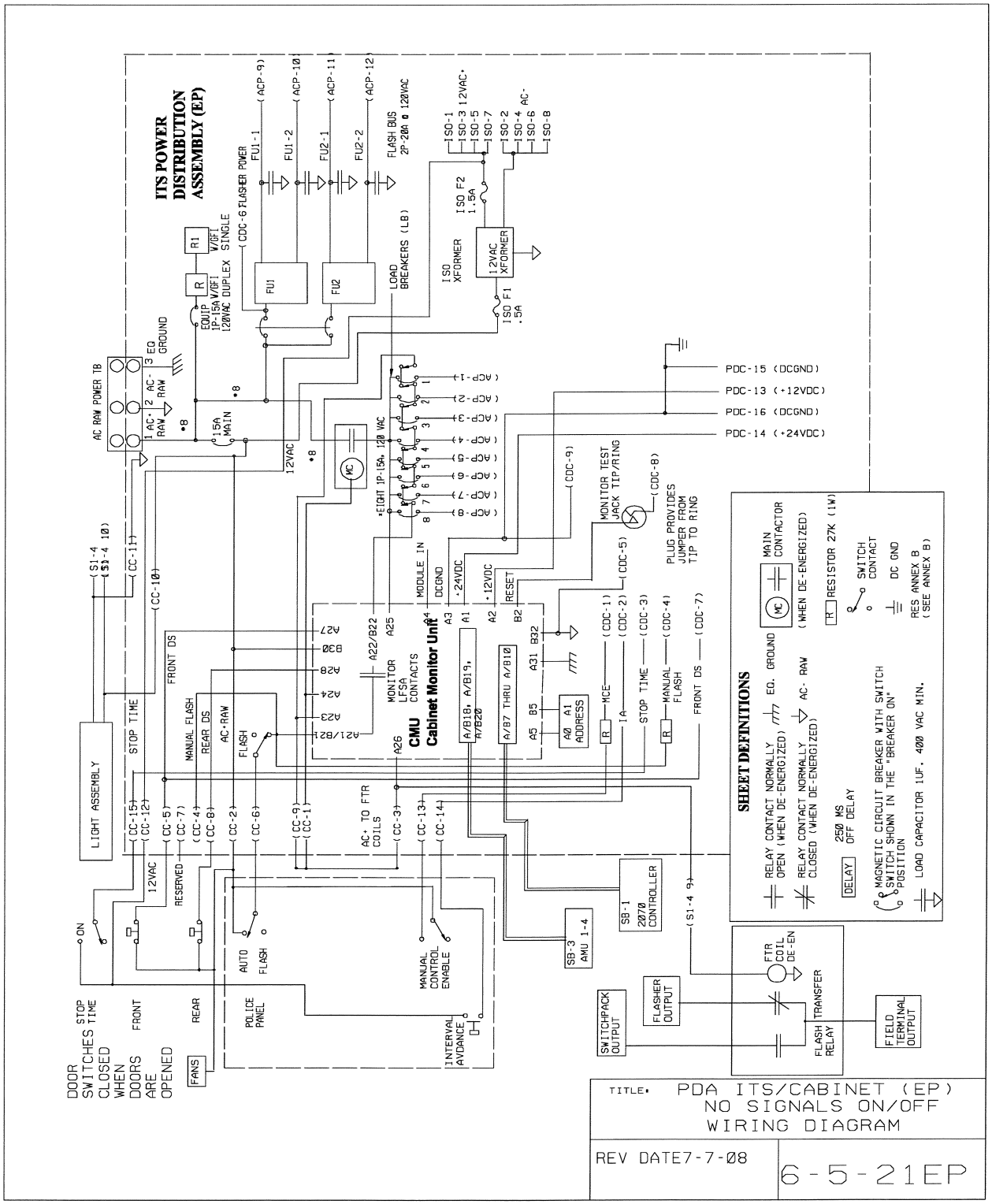

Figure 50
PDA ITS/Cabinet (EP) Wiring Diagram

PDA ITS CONNECTORS and PIN ASSIGNMENTS

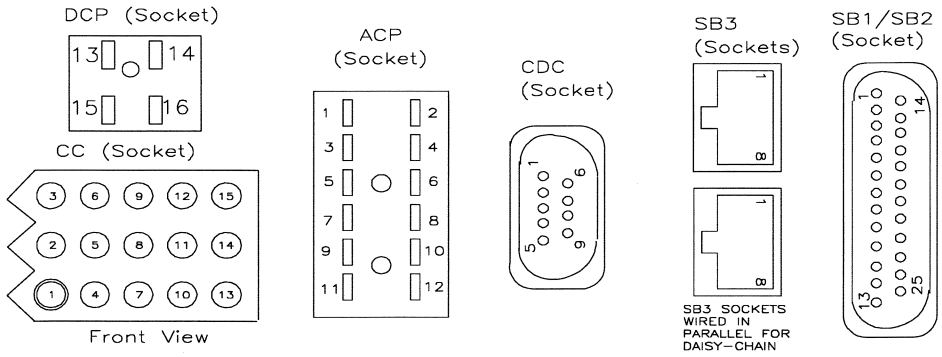

CMU ADDRESS

Pin #	FUNCTION	Pin #	FUNCTION
1	CMU A5 (A0)	3	CMU B5 (A1)
2	AC–	4	AC–

CMU ADDR

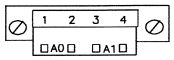

ISO OUT

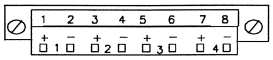

CC (Cabinet) CONNECTOR

Pin #	FUNCTION	Pin #	FUNCTION
CC–1	MC COIL from PP	CC–2	AC+ RAW to PP and Fan
CC–3	TR Coil from PP	CC–4	Signal Flash
CC–5	From Front Door Switch	CC–6	From Auto Flash Switch
CC–7	MONITOR INTERLOCK	CC–8	From Rear Door Switch
CC–9	CB trip status CMU to PP	CC–10	AC+ RAW
CC–11	AC– RAW	CC–12	12VAC to Police Panel
CC–13	MANUAL CONTROL EN in	CC–14	INTERVAL ADV Out
CC–15	STOP TIME Switch		

12VAC ISO TERMINAL BLOCK

Pin	FUNCTION	Pin	FUNCTION	Pin	FUNCTION	Pin	FUNCTION
1	12 VAC+	3	12 VAC+	5	12 VAC+	7	12 VAC+
2	AC–RAW	4	AC–RAW	6	AC–RAW	8	AC–RAW

DCP CONNECTOR

Pin #	FUNCTION	Pin #	FUNCTION
14	+24VDC	13	+12VDC
16	DC GND	15	DC GND

ACP CONNECTOR

Pin #	FUNCTION	Pin #	FUNCTION
P–1	LB1 AC+	P–2	LB2 AC+
P–3	LB3 AC+	P–4	LB4 AC+
P–5	LB5 AC+	P–6	LB6 AC+
P–7	LB7 AC+	P–8	LB8 AC+
P–9	FU1–1	P–10	FU1–2
P–11	FU2–1	P–12	FU2–2

PDA ITS CDC

Pin #	FUNCTION	Pin #	FUNCTION
CDC–1	MCE (Manual Control Enable)	CDC–2	IA (Interval Advance)
CDC–3	Stop Time/Monitor Relay	CDC–4	Local Flash
CDC–5	MCE,IA,Common	CDC–6	Flasher Power
CDC–7	Door Ajar	CDC–8	EXTERNAL RESET
CDC–9	DC GROUND		

Pin	AT THE CONTROLLER	AT THE PDA	Pin	AT THE CONTROLLER	AT THE PDA
1	SB1 TXD+	SB1 RXD+	14	SB1 TXD–	SB1 RXD–
2	SB1 RXD+	SB1 TXD+	15	SB1 RXD–	SB1 TXD–
3	SB1 TXC+	SB1 RXC+	16	SB1 TXC–	SB1 RXC–
4	SB1 RXC+	SB1 TXC+	17	SB1 RXC–	SB1 TXC–
5	SB2 TXD+	NA	18	SB2 TXD–	NA
6	SB2 RXD+	NA	19	SB2 RXD–	NA
7	SB2 TXC+	NA	20	SB2 TXC–	NA
8	SB2 RXC+	NA	21	SB2 RXC–	NA
9	LINE SYNC+	LINE SYNC+	22	LINE SYNC–	LINE SYNC–
10	NRESET+	NRESET+	23	NRESET–	NRESET–
11	PWR DWN+	PWR DWN+	24	PWR DWN–	PWR DWN–
12	+5VDC ISO	+5VDC ISO	25	EQ GND	EQ GND
13	DC GND ISO	DC GND ISO			

SB3 CONNECTOR

Pin #	PAIR COLOR	AT THE PDA	AT THE OUTPUT ASSEMBLY
1	WHITE ORANGE	SB3 TXC+	SB3 RXC+
2	ORANGE	SB3 TXC–	SB3 RXC–
3	WHITE GREEN	AC– RAW	AC– RAW
4	BLUE	SB3 TXD+	SB3 RXD+
5	WHITE BLUE	SB3 TXD–	SB3 RXD–
6	GREEN	AC– RAW	AC– RAW
7	WHITE BROWN	SB3 RXD+	SB3 TXD+
8	BROWN	SB3 RXD–	SB3 TXD–

TITLE: PDA 5 IP/EP ITS CONNECTORS

Rev Date 03–03–06

6–5–22

Figure 51
PDA 5 IP/EP ITS – Connectors

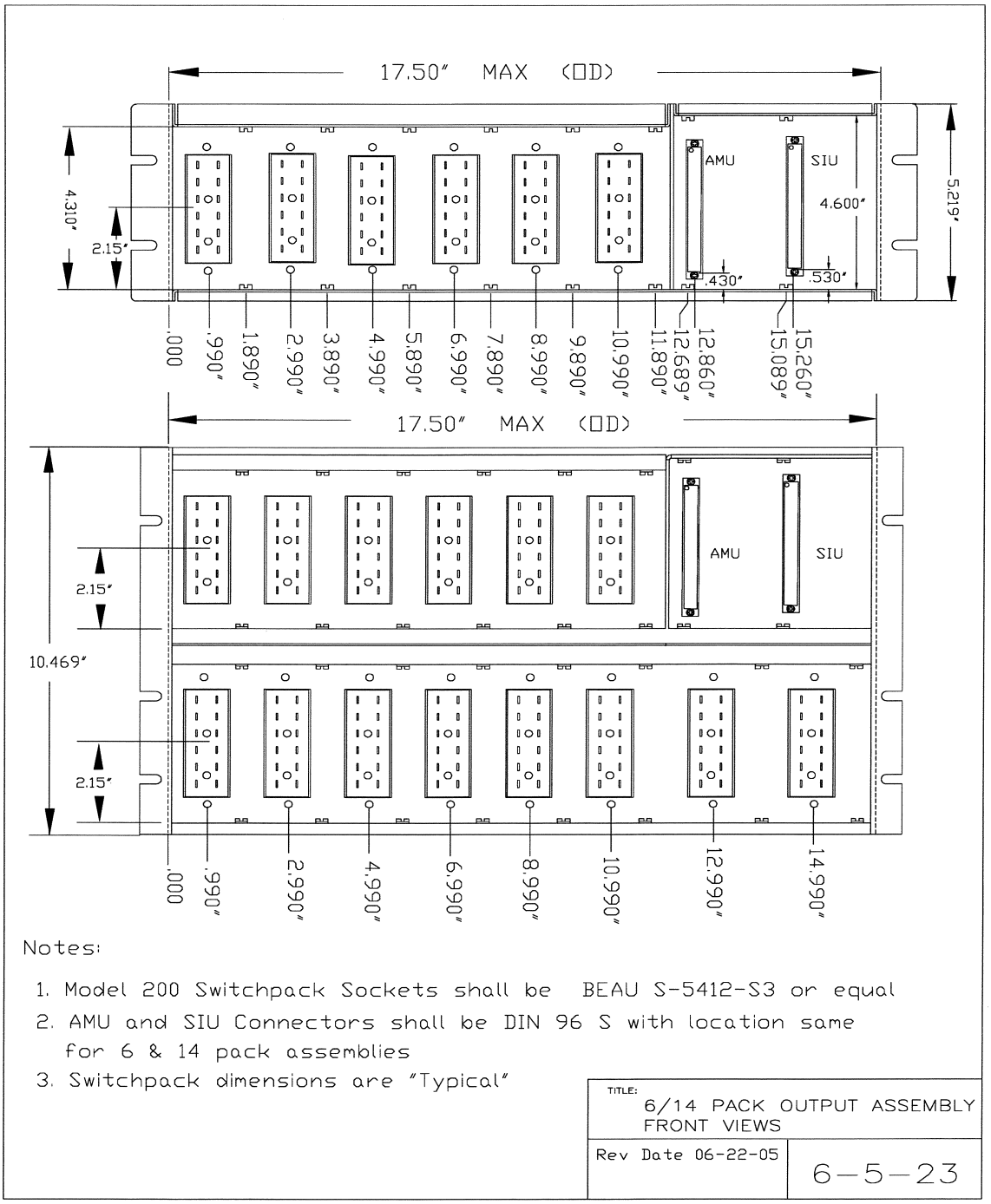

Figure 52
6/14 Pack Output Assembly – Front View

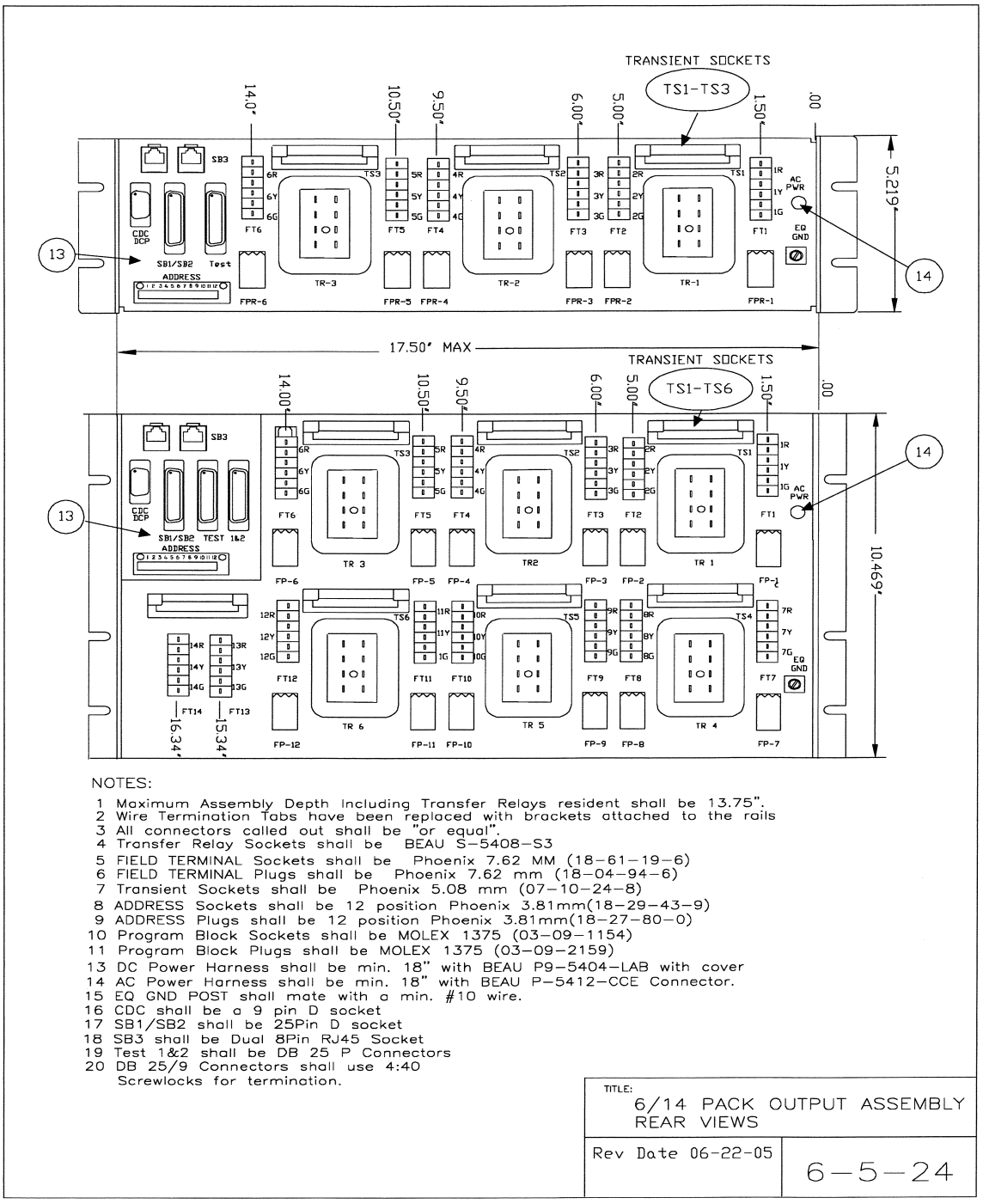

NOTES:

1 Maximum Assembly Depth Including Transfer Relays resident shall be 13.75".
2 Wire Termination Tabs have been replaced with brackets attached to the rails
3 All connectors called out shall be "or equal".
4 Transfer Relay Sockets shall be BEAU S-5408-S3
5 FIELD TERMINAL Sockets shall be Phoenix 7.62 MM (18-61-19-6)
6 FIELD TERMINAL Plugs shall be Phoenix 7.62 mm (18-04-94-6)
7 Transient Sockets shall be Phoenix 5.08 mm (07-10-24-8)
8 ADDRESS Sockets shall be 12 position Phoenix 3.81mm(18-29-43-9)
9 ADDRESS Plugs shall be 12 position Phoenix 3.81mm(18-27-80-0)
10 Program Block Sockets shall be MOLEX 1375 (03-09-1154)
11 Program Block Plugs shall be MOLEX 1375 (03-09-2159)
13 DC Power Harness shall be min. 18" with BEAU P9-5404-LAB with cover
14 AC Power Harness shall be min. 18" with BEAU P-5412-CCE Connector.
15 EQ GND POST shall mate with a min. #10 wire.
16 CDC shall be a 9 pin D socket
17 SB1/SB2 shall be 25Pin D socket
18 SB3 shall be Dual 8Pin RJ45 Socket
19 Test 1&2 shall be DB 25 P Connectors
20 DB 25/9 Connectors shall use 4:40 Screwlocks for termination.

TITLE: 6/14 PACK OUTPUT ASSEMBLY REAR VIEWS	
Rev Date 06-22-05	6-5-24

Figure 53
6/14 Pack Output Assembly – Rear Views

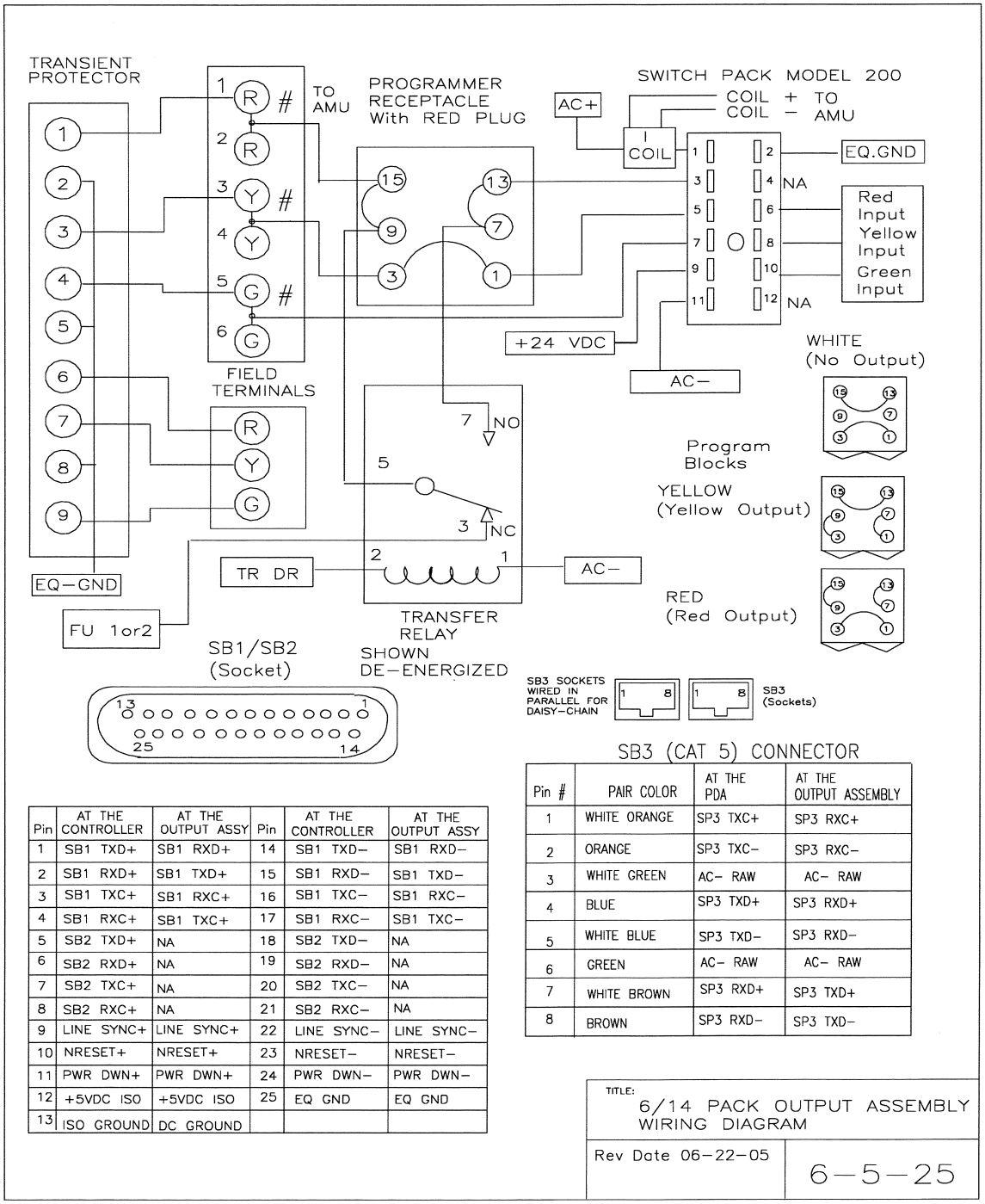

Pin	AT THE CONTROLLER	AT THE OUTPUT ASSY	Pin	AT THE CONTROLLER	AT THE OUTPUT ASSY
1	SB1 TXD+	SB1 RXD+	14	SB1 TXD−	SB1 RXD−
2	SB1 RXD+	SB1 TXD+	15	SB1 RXD−	SB1 TXD−
3	SB1 TXC+	SB1 RXC+	16	SB1 TXC−	SB1 RXC−
4	SB1 RXC+	SB1 TXC+	17	SB1 RXC−	SB1 TXC−
5	SB2 TXD+	NA	18	SB2 TXD−	NA
6	SB2 RXD+	NA	19	SB2 RXD−	NA
7	SB2 TXC+	NA	20	SB2 TXC−	NA
8	SB2 RXC+	NA	21	SB2 RXC−	NA
9	LINE SYNC+	LINE SYNC+	22	LINE SYNC−	LINE SYNC−
10	NRESET+	NRESET+	23	NRESET−	NRESET−
11	PWR DWN+	PWR DWN+	24	PWR DWN−	PWR DWN−
12	+5VDC ISO	+5VDC ISO	25	EQ GND	EQ GND
13	ISO GROUND	DC GROUND			

Pin #	PAIR COLOR	AT THE PDA	AT THE OUTPUT ASSEMBLY
1	WHITE ORANGE	SP3 TXC+	SP3 RXC+
2	ORANGE	SP3 TXC−	SP3 RXC−
3	WHITE GREEN	AC− RAW	AC− RAW
4	BLUE	SP3 TXD+	SP3 RXD+
5	WHITE BLUE	SP3 TXD−	SP3 RXD−
6	GREEN	AC− RAW	AC− RAW
7	WHITE BROWN	SP3 RXD+	SP3 TXD+
8	BROWN	SP3 RXD−	SP3 TXD−

Figure 54
6/14 Pack Output Assembly – Wiring Diagram

NOTE: 6/14 PACK LOCATION ASSIGNMENT REQUIREMENTS:

1 SIXPACK 1 PLUGS INTO S1 (Address 5)
2 SIXPACK 2 PLUGS INTO S2 (Address 6)
3 SIXPACK 3 PLUGS INTO S3 (Address 7)
4 SIXPACK 4 PLUGS INTO S4 (Address 4)
5 14 PACK 1 PLUGS INTO S1 (Address 1)
6 14 PACK 2 PLUGS INTO S3 (Address 3)

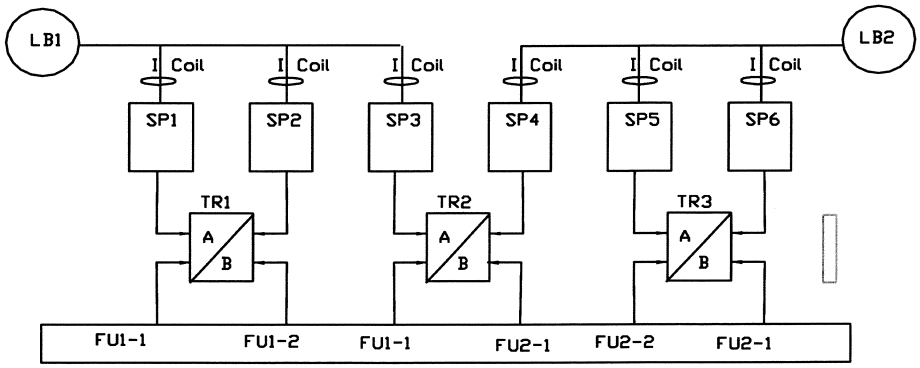

FLASHER TO OUTPUT ASSIGNMENT

FLASHER TO OUTPUT ASSIGNMENT

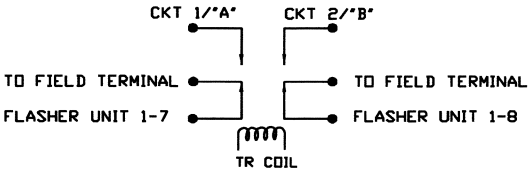

RELAY SHOWN DE-ENERGIZED

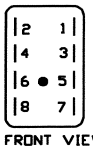

PIN	FUNCTION
1	COIL
2	COIL
3	N.C. CIRCUIT #1
4	N.C. CIRCUIT #2
5	COMMON CIRCUIT #1
6	COMMON CIRCUIT #2
7	N.O. CIRCUIT #1
8	N.O. CIRCUIT #2

HEAVY DUTY (HD) RELAY SOCKET DETAIL

TITLE: 6 PACK OUTPUT ASSEMBLY CB/FLASHER DIAGRAM & ASSIGNMENT NOTE

Rev Date 06-22-05

6-5-26

Figure 55
6 Pack O/A – CB/Flasher Diagram and Assignment Note

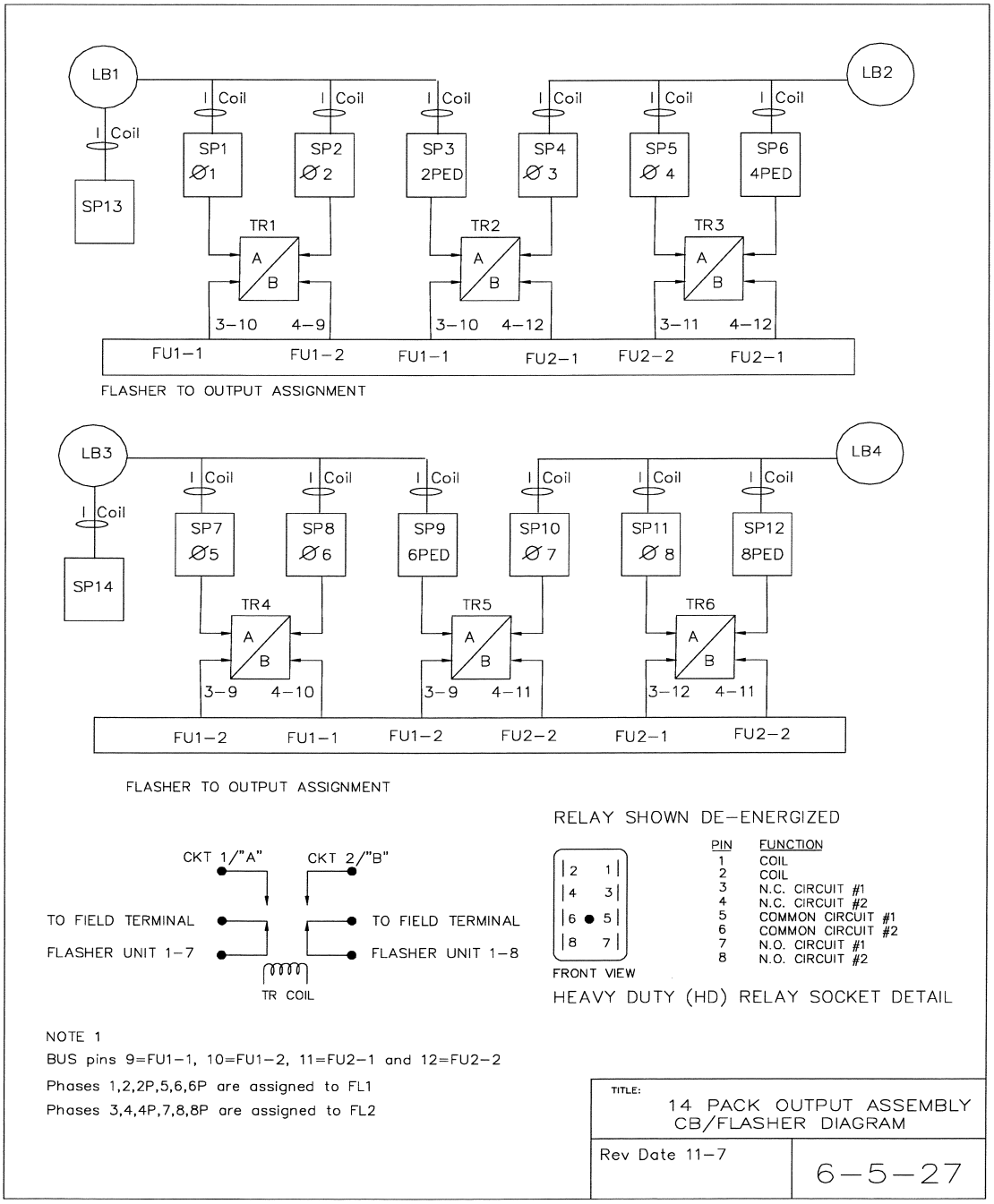

Figure 56
14 Pack O/A – CB/Flasher Diagram

Pin	SIU PIN	SIGNAL	Pin	SIU PIN	SIGNAL
1	A2	INPUT 0	14	B8	INPUT 13
2	B2	INPUT 1	15	A9	INPUT 14
3	A3	INPUT 2	16	B9	INPUT 15
4	B3	INPUT 3	17	A10	INPUT 16
5	A4	INPUT 4	18	B10	INPUT 17
6	B4	INPUT 5	19		
7	A5	INPUT 6	20		
8	B5	INPUT 7	21	C4	Out 51
9	A6	INPUT 8	22	C5	Out 52
10	B6	INPUT 9	23	C6	Out 53
11	A7	INPUT 10	24	C7	Out 54
12	B7	INPUT 11	25	A32	DC Ground
13	A8	INPUT 12			

TEST CONNECTOR
PLUG (Face View)

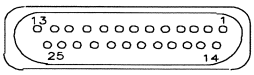

Pin	SIU PIN	SIGNAL	Pin	SIU PIN	SIGNAL
1	NC	KEY	14	A17	INPUT 30
2	A11	INPUT 18	15	B17	INPUT 31
3	B11	INPUT 19	16	A18	INPUT 32
4	A12	INPUT 20	17	B18	INPUT 33
5	B12	INPUT 21	18	A19	INPUT 34
6	A13	INPUT 22	19	B19	INPUT 35
7	B13	INPUT 23	20	A20	INPUT 36
8	A14	INPUT 24	21	B20	INPUT 37
9	B14	INPUT 25	22	A21	INPUT 38
10	A15	INPUT 26	23	B21	INPUT 39
11	B15	INPUT 27	24	A22	INPUT 40
12	A16	INPUT 28	25	B22	INPUT 41
13	B16	INPUT 29			

DCP(Plug)
PLUG (Face View)

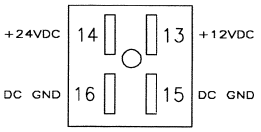

ADC Connector

Pin	FUNCT	Pin	FUNCT
1	SIUA0	2	DC GND
3	SIUA1	4	DC GND
5	SIUA2	6	DC GND
7	SIUA3	8	DC GND
9	AMUA0	10	Common
11	AMUA1	12	Common

CDC Connector

Pin	FUNCTION	Pin	FUNCTION
1	Opto 1	6	NA*
2	Opto 2	7	NA*
3	Opto 3	8	A25 I/O-47
4	Opto 4	9	B32 DC Ground
5	Opto Common		

PIN	SIU A	SP,CDC,ADC &TC PINS	SIU B	SP,CDC,ADC &TC PINS	SIU C	TC & COMM PINS
1	+24VDCin	DCP-14	+24VDCin	DCP-14	I/O 47	NA
2	I/O 0	SP1-6 TC-1	I/O 1	SP1-8 TC-2	I/O 48	NA
3	I/O 2	SP1-10 TC-3	I/O 3	SP2-6 TC-4	I/O 49	NA
4	I/O 4	SP2-8 TC-5	I/O 5	SP2-10 TC-6	I/O 50	TC-21
5	I/O 6	SP3-6 TC-7	I/O 7	SP3-8 TC-8	I/O 51	TC-22
6	I/O 8	SP3-10 TC-9	I/O 9	SP4-6 TC-10	I/O 52	TC-23
7	I/O 10	SP4-8 TC-11	I/O 11	SP4-10 TC-12	I/O 53	TC-24
8	I/O 12	SP5-6 TC-13	I/O 13	SP5-8 TC-14	SB1 TxD +	SB1 2 RXD+
9	I/O 14	SP5-10 TC-15	I/O 15	SP6-6 TC-16	SB1 TxD -	SB1 15 RXD-
10	I/O 16	SP6-8 TC-17	I/O 17	SP6-10 TC-18	SB1 RxD +	SB1 1 TXD+
11	I/O 18	SP7-6 TC-2*	I/O 19	SP7-8 TC-3*	SB1 RxD -	SB1 14 TXD-
12	I/O 20	SP7-10 TC-4*	I/O 21	LS8-6 TC-5*	SB1 TxC +	SB1 4 RXC+
13	I/O 22	SP8-8 TC-6*	I/O 23	SP8-10 TC-7*	SB1 TxC -	SB1 17 RXC-
14	I/O 24	SP9-6 TC-8*	I/O 25	SP9-8 TC-9*	SB1 RxC +	SB1 3 TXC+
15	I/O 26	SP9-10 TC-10*	I/O 27	SP10-6 TC-11*	SB1 RxC -	SB1 16 TXC-
16	I/O 28	SP10-8 TC-12*	I/O 29	SP10-10TC-13*	LINE SYNC. +	9 LineSync+
17	I/O 30	SP11-6 TC-14*	I/O 31	SP11-8 TC-15*	LINE SYNC. -	22 LineSync-
18	I/O 32	SP11-10TC-16*	I/O 33	SP12-6 TC-17*	N RESET +	10 NRESET+
19	I/O 34	SP12-8 TC-18*	I/O 35	LS12-10TC-19*	N RESET -	23 NRESET-
20	I/O 36	SP13-6 TC-20*	I/O 37	SP13-8 TC-21*	ASSY ADDR	NA
21	I/O 38	SP13-10TC-22*	I/O 39	SP14-6 TC-23*	IB RTS	NA
22	I/O 40	SP14-8 TC-24*	I/O 41	SP14-10TC-25*	SB2 TxD +	NA
23	I/O 42	NA	I/O 43	NA	SB2 TxD -	NA
24	I/O 44	NA	I/O 45	NA	SB2 RxD +	NA
25	I/O 46	CDC-8	Opto 1	CDC-1	SB2 RxD -	NA
26	Opto 2	CDC-2	Opto 3	CDC-3	SB2 TxC +	NA
27	Opto 4	CDC-4	Common	CDC-5	SB2 TxC -	NA
28	AD	ADC -1	A1	ADC -3	SB2 RxC +	NA
29	A2	ADC -5	A3	ADC -7	SB2 RxC -	NA
30	IB TxD	NA	IB RxD	NA	IB TXC	NA
31	EG	EG	ACLRef	NA	IB RxC	NA
32	DC GND	DCP-16 TC25	DC GND	DCP-16	SIU/ENABLE	DCP-16

*TEST CONNECTOR 7-14 (For 14 Pack)

ADDRESS PLUG (FRONT VIEW)

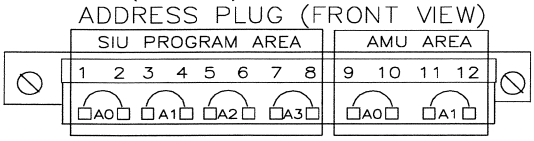

SIU OUTPUT ASSY	JUMPER	BINARY
14 PACK Pos 1	1-2	0001
14 PACK Pos 3	3-4	0011
6 PAK Pos 4	5-6	0100
6 PAK Pos 1	1-2 5-6	0101
6 PAK Pos 2	3-4 5-6	0110
6 PAK Pos 3	1-2 3-4 5-6	0111

AMU 9-12	JUMPER	BINARY
14 PACK Pos 1	9-10	001
14 PACK Pos 3	9-10 11-12	011
6 PAK Pos 4	**A2	100
6 PAK Pos 1	**9-10	101
6 PAK Pos 2	**11-12	110
6 PAK Pos 3	**9-10 **11-12	111

AMU **A2 Jumpered to Common

CDC SOCKET (FACE VIEW)

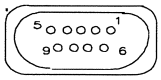

TITLE:
6/14 PACK OUTPUT ASSEMBLY CONNECTORS

Rev Date 06-22-05

6-5-28

Figure 57
6/14 Pack Output Assembly Connectors

AMU TO OUTPUT ASSEMBLY INTERCONECT

Pin #	FUNCTION	Pin #	FUNCTION	Pin #	FUNCTION
A1	VDC Ground	B1	+24 VDC in	C1	Address Common
A2	SB3 RxC+	B2	SB3 TxD−	C2	SB3 TxD+
A3	SB3 RxC−	B3	SB3 RxD−	C3	SB3 RxD+
A4	ADDR 0	B4	ADDR 1	C4	ADDR 2
A5	SP3 Coil 3+	B5	SP2 Coil 2+	C5	SP1 Coil 1+
A6	SP3 Coil 3−	B6	SP2 Coil 2−	C6	SP1 Coil 1−
A7	SP6 Coil 6+	B7	SP5 Coil 5+	C7	SP4 Coil 4+
A8	SP6 Coil 6−	B8	SP5 Coil 5−	C8	SP4 Coil 4−
A9	SP9 Coil 9+	B9	SP8 Coil 8+	C9	SP7 Coil 7+
A10	SP9 Coil 9−	B10	SP8 Coil 8−	C10	SP7 Coil 7−
A11	SP12 Coil 12+	B11	SP11 Coil 11+	C11	SP10 Coil 10+
A12	SP12 Coil 12−	B12	SP11 Coil 11−	C12	SP10 Coil 10−
A13	SP14 Coil 14+	B13	SP13 Coil 13−	C13	SP13 Coil 13+
A14	SP14 Coil 14−	B14	FU2−1	C14	FU1−1
A15	NA	B15	FU2−2	C15	FU1−2
A16	Sp1 Green FT1 5/6	B16	SP1 Yellow FT1 3/4	C16	SP1 Red FT1 1/2
A17	SP2 Green FT2 5/6	B17	SP2 Yellow FT2 3/4	C17	SP2 Red FT2 1/2
A18	SP3 Green FT3 5/6	B18	SP3 Yellow FT3 3/4	C18	SP3 Red FT3 1/2
A19	SP4 Green FT4 5/6	B19	SP4 Yellow FT4 3/4	C19	SP4 Red FT4 1/2
A20	SP5 Green FT5 5/6	B20	SP5 Yellow FT5 3/4	C20	SP5 Red FT5 1/2
A21	SP6 Green FT6 5/6	B21	SP6 Yellow FT6 3/4	C21	SP6 Red FT6 1/2
A22	SP7 Green FT7 5/6	B22	SP7 Yellow FT7 3/4	C22	SP7 Red FT7 1/2
A23	SP8 Green FT8 5/6	B23	SP8 Yellow FT8 3/4	C23	SP8 Red FT8 1/2
A24	SP9 Green FT9 5/6	B24	SP9 Yellow FT9 3/4	C24	SP9 Red FT9 1/2
A25	SP10Green FT10 5/6	B25	SP10Yellow FT10 3/4	C25	SP10Red FT10 1/2
A26	SP11Green FT11 5/6	B26	SP11Yellow FT11 3/4	C26	SP11Red FT11 1/2
A27	SP12Green FT12 5/6	B27	SP12Yellow FT12 3/4	C27	SP12Red FT12 1/2
A28	SP13Green FT13 5/6	B28	SP13Yellow FT13 3/4	C28	SP13Red FT13 1/2
A29	SP14Green FT14 5/6	B29	SP14Yellow FT14 3/4	C29	SP14Red FT14 1/2
A30	NA	B30	AC+ RAW	C30	AC+ RAW
A31	EQ Ground	B31	NA	C31	NA
A32	NA	B32	AC− RAW	C32	AC− RAW

TITLE: AMU TO OUTPUT ASSEMBLY INTERCONNECT

Rev Date 06-22-05

6-5-29

Figure 58
AMU to Output Assembly Interconnect

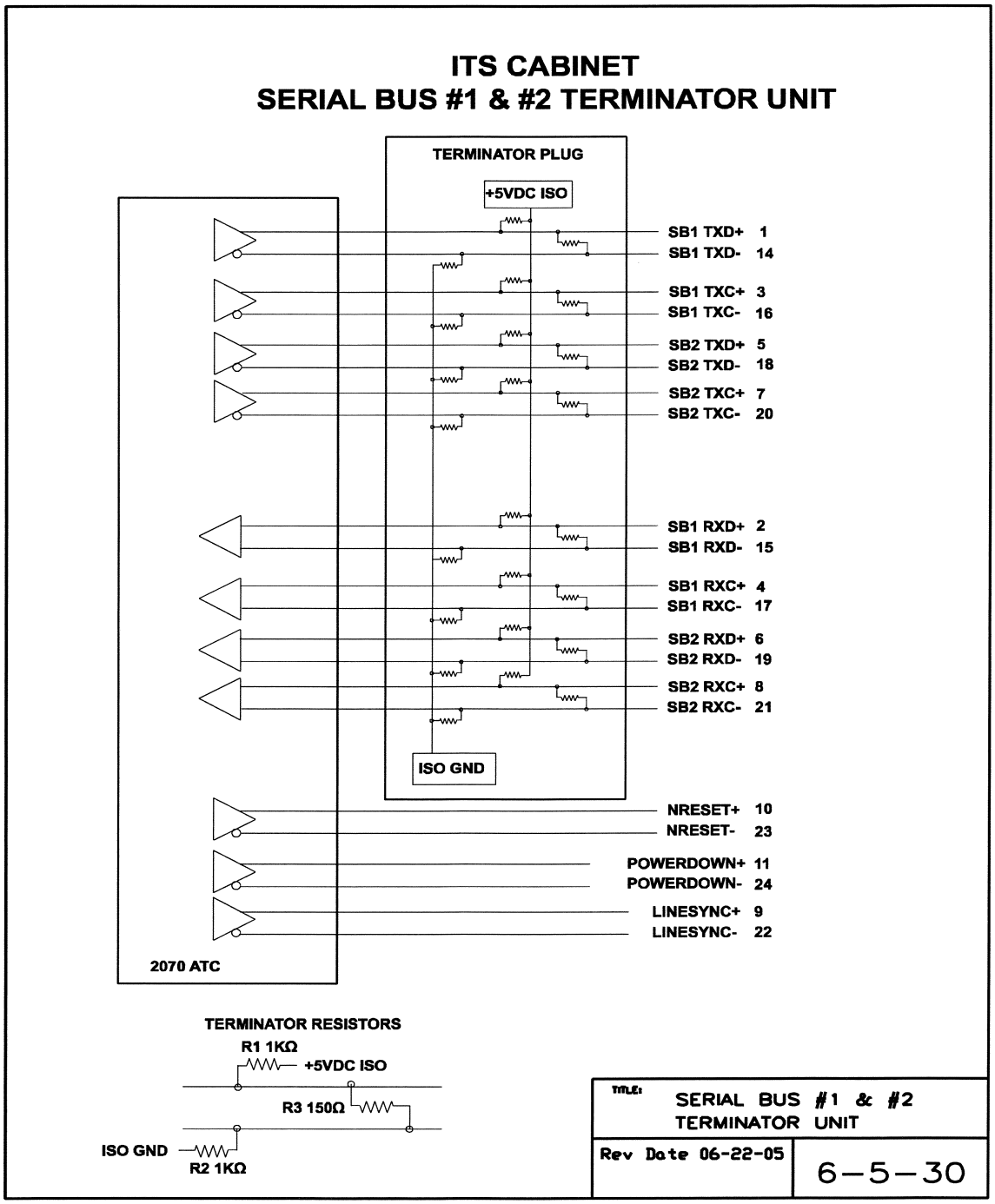

Figure 59
Serial Bus #1 and #2 Terminator Unit

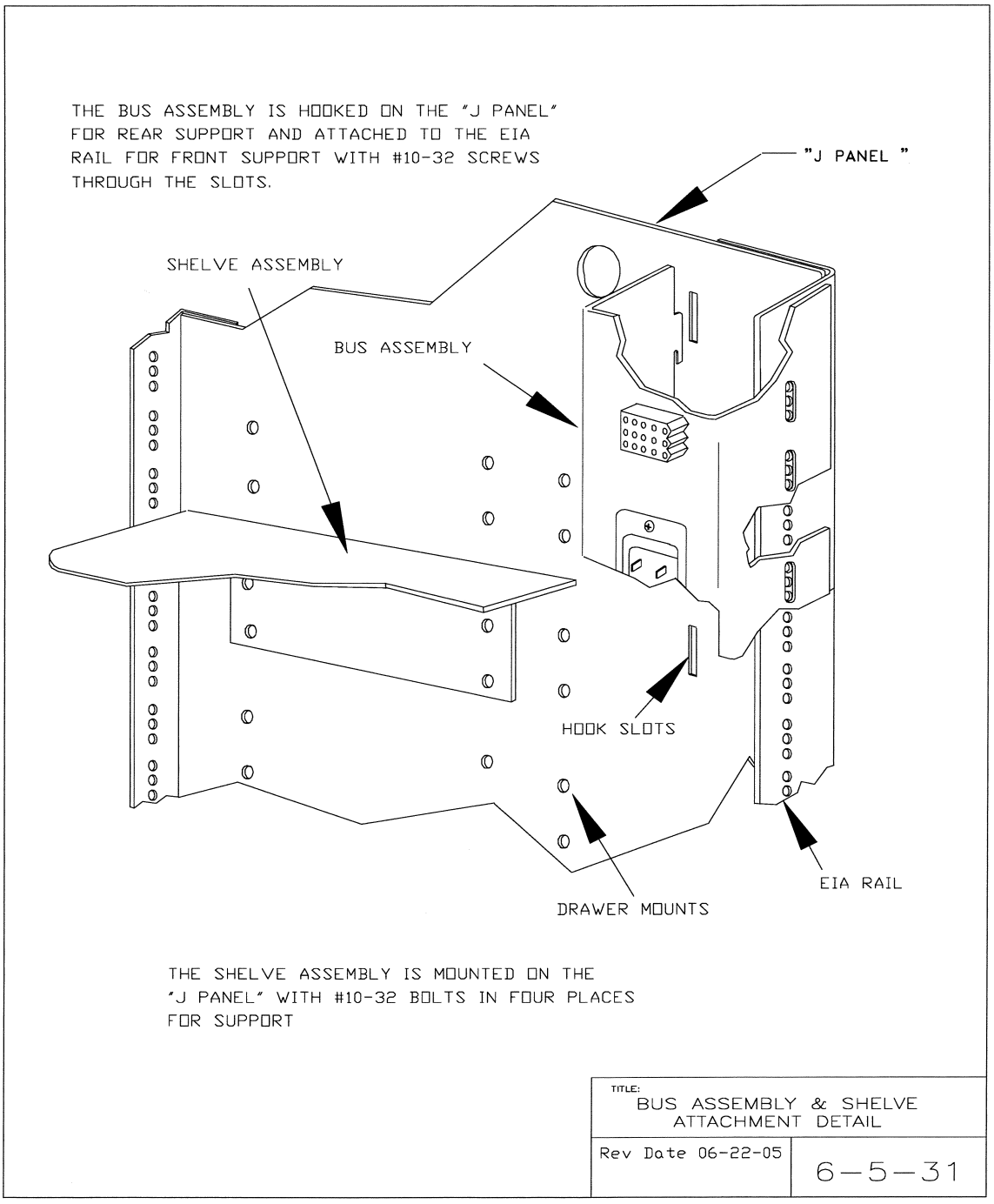

Figure 60
Bus Assembly and Shelve Attachment Detail

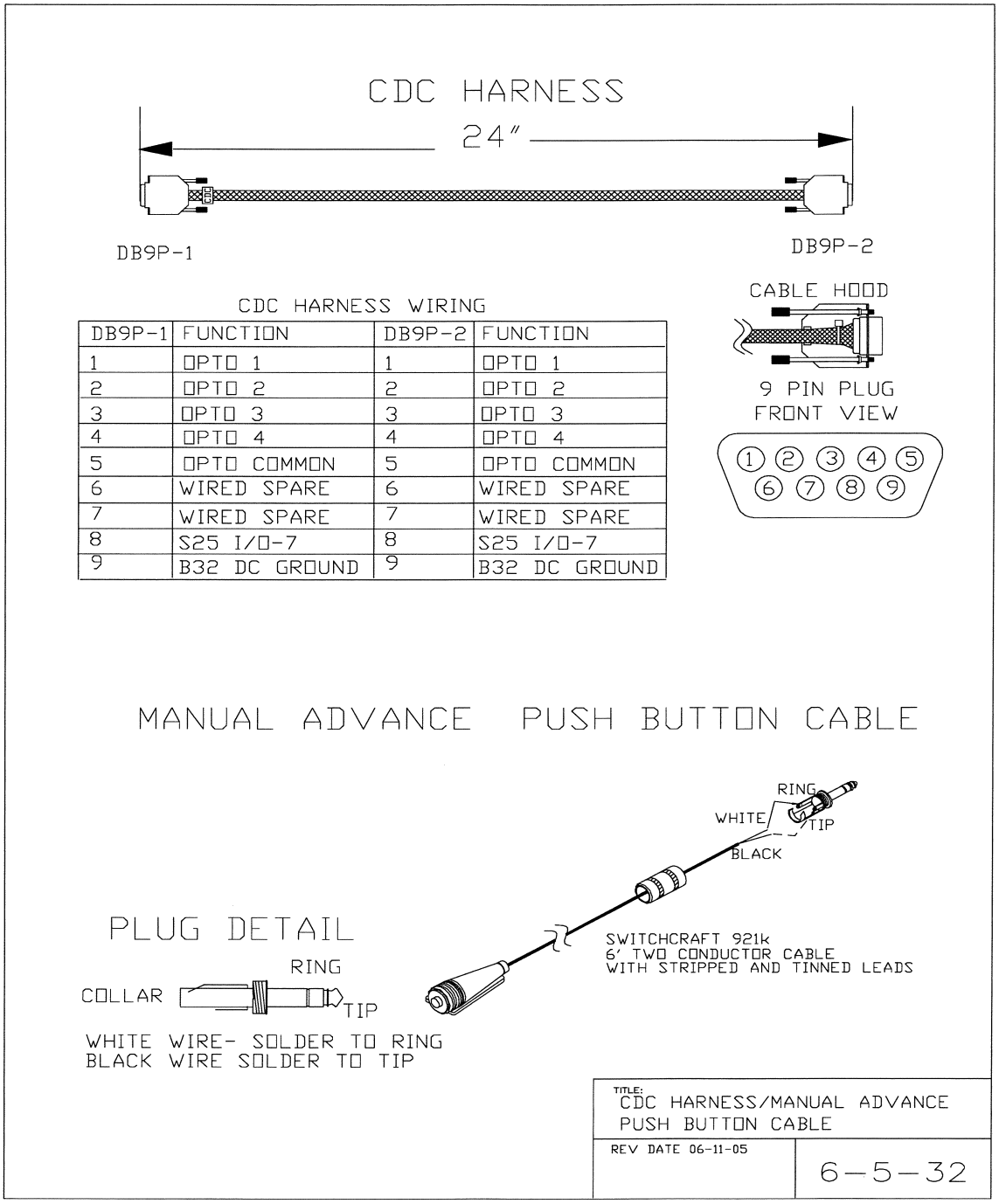

CDC HARNESS WIRING

DB9P-1	FUNCTION	DB9P-2	FUNCTION
1	OPTO 1	1	OPTO 1
2	OPTO 2	2	OPTO 2
3	OPTO 3	3	OPTO 3
4	OPTO 4	4	OPTO 4
5	OPTO COMMON	5	OPTO COMMON
6	WIRED SPARE	6	WIRED SPARE
7	WIRED SPARE	7	WIRED SPARE
8	S25 I/O-7	8	S25 I/O-7
9	B32 DC GROUND	9	B32 DC GROUND

Figure 61
CDC Harness/Manual Advance Push Button Cable

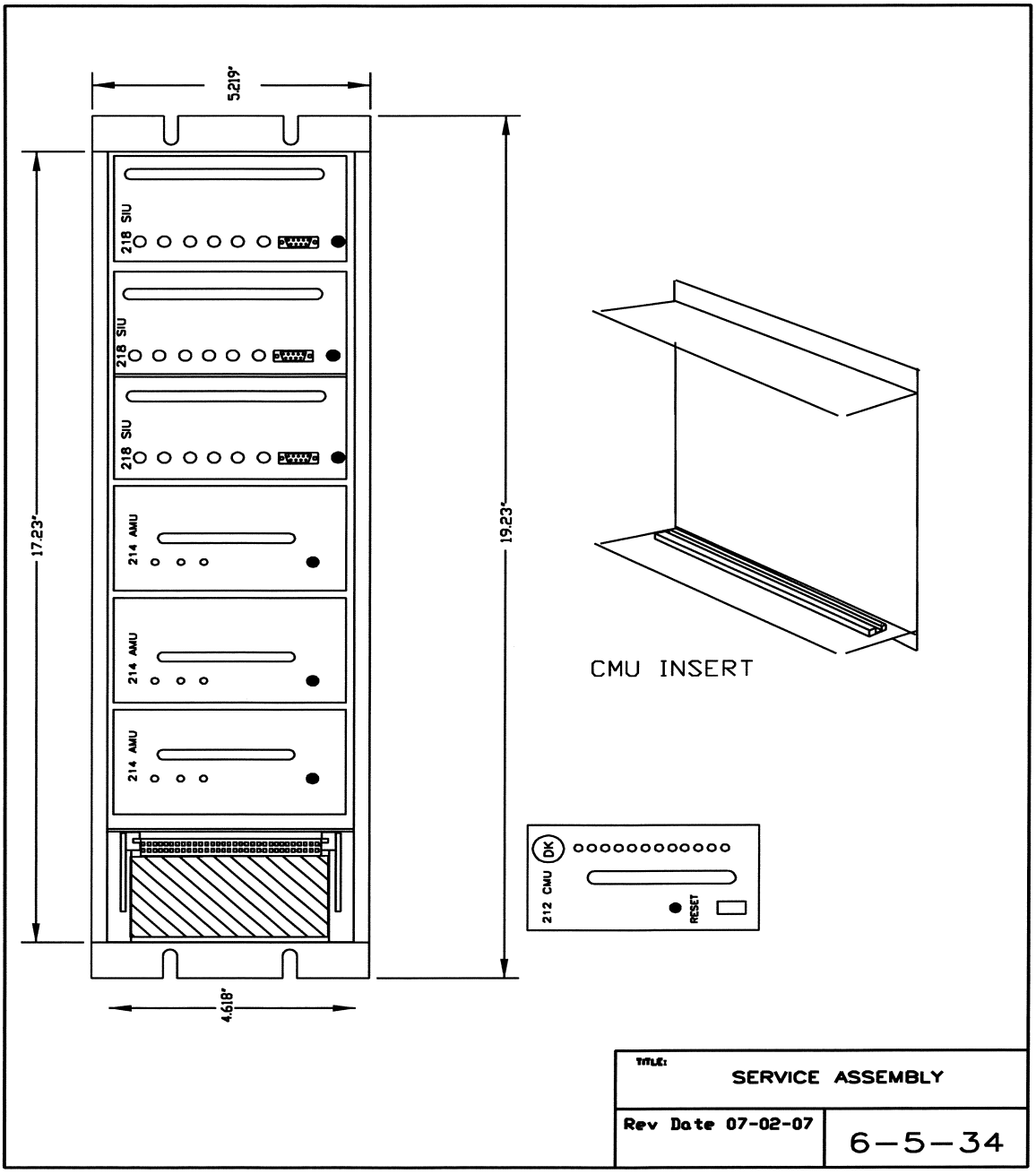

Figure 62
Service Assembly 1

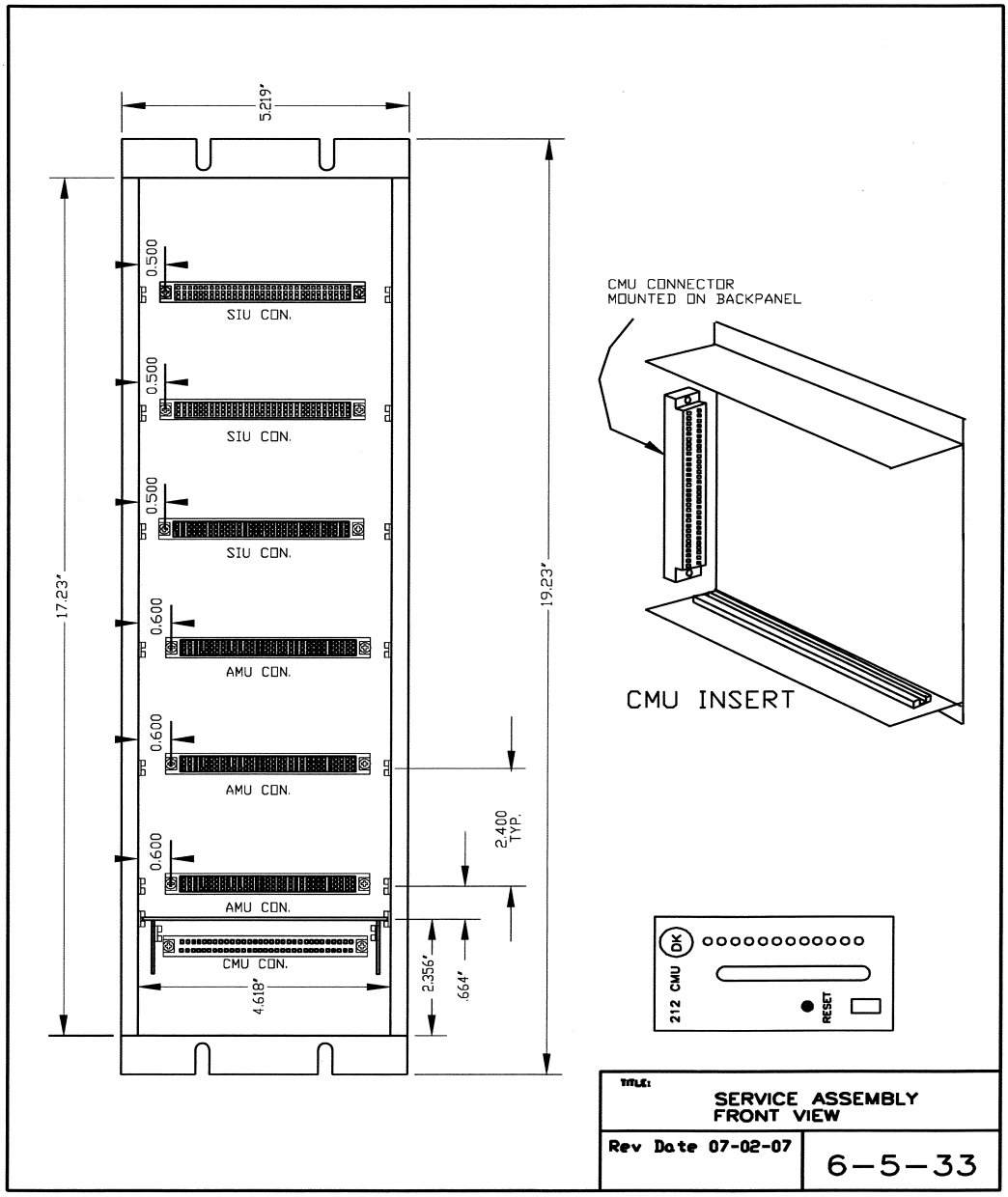

Figure 63
Service Assembly 2

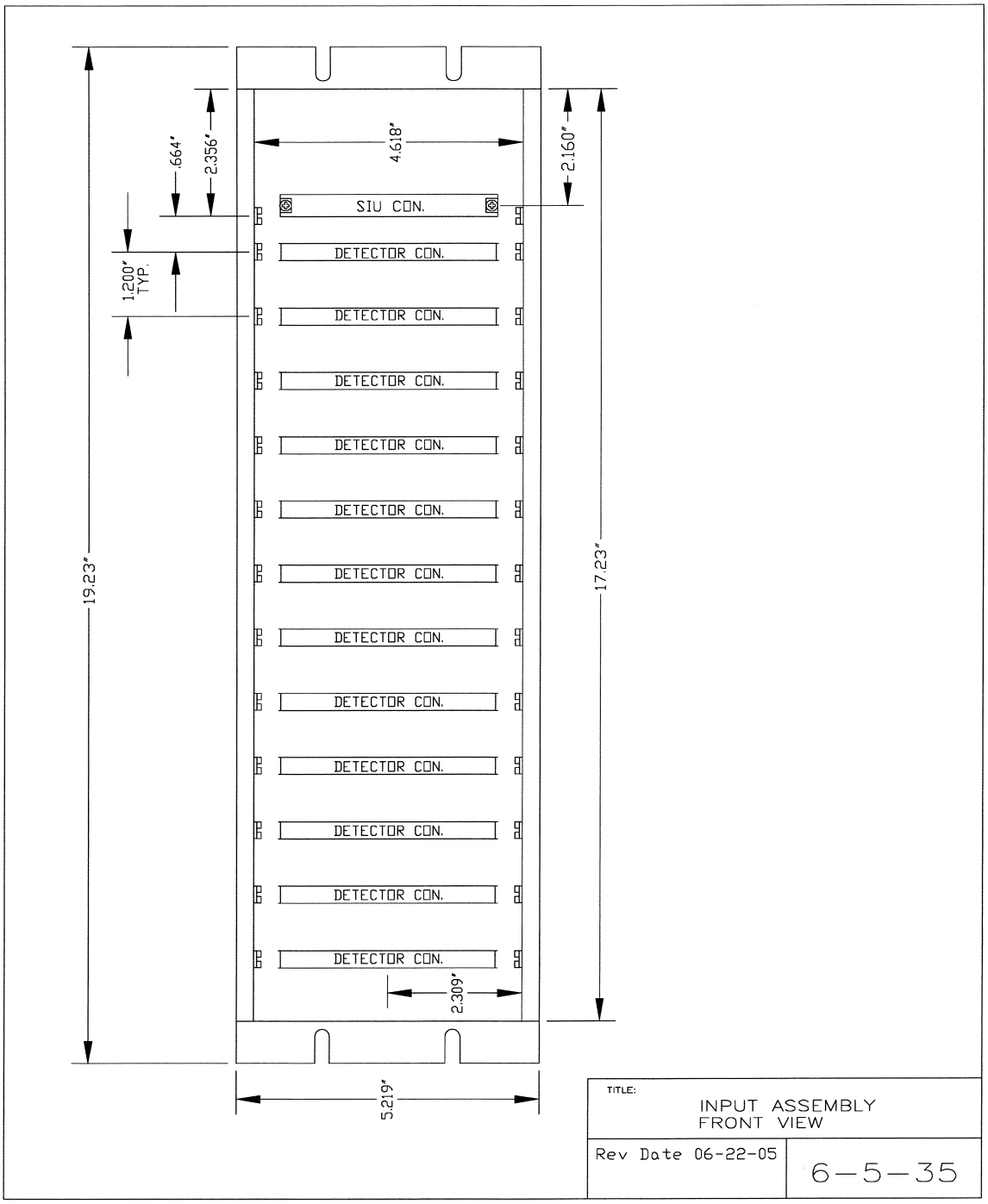

Figure 64
Input Assembly – Front View

NOTES:

1. Address Socket shall be an 8–position Phoenix 3.81mm socket (18–27–59–6) or (18–30–65–1). Address Plug shall be an 8–position Phoenix 3.81mm plug (18–27–76–1).

2. Field Termination Socket shall be a 10–position Phoenix 5.08mm plug (17–55–81–7). Field Termination Plug shall be a 10–position Phoenix 5.08mm plug (17–57–09–3).

3. Communications cable shall be attached to the assembly and to the bus with screws.

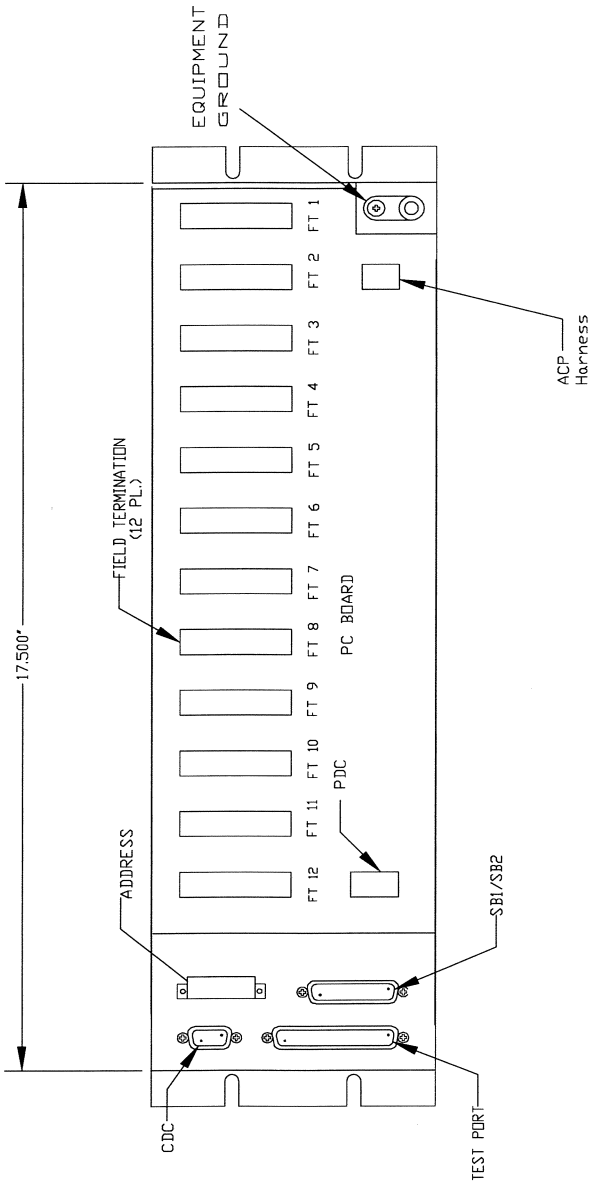

TITLE: INPUT ASSEMBLY REAR VIEW

Rev Date 06-22-05

6–5–36

Figure 65
Input Assembly – Rear View

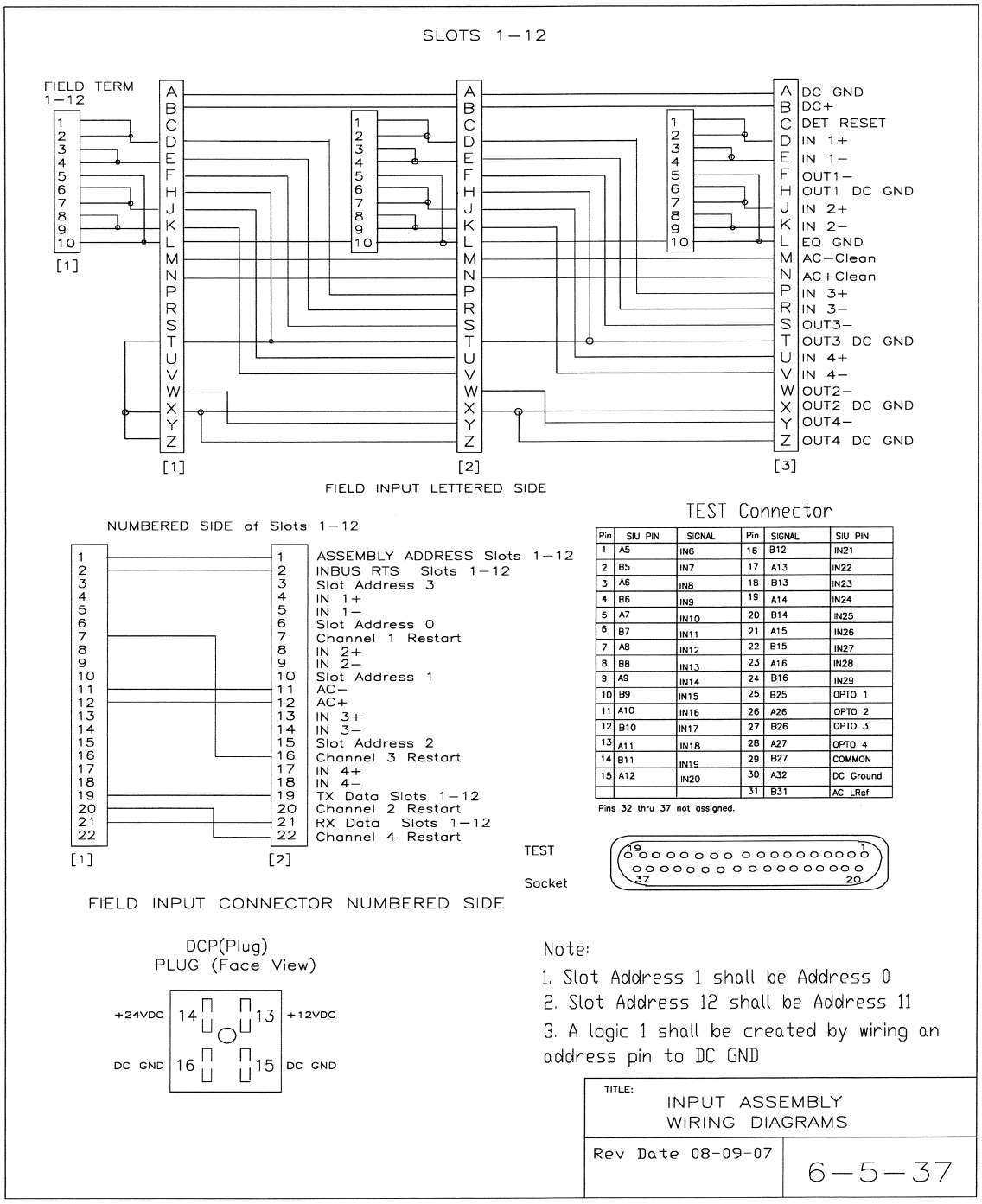

Pin	SIU PIN	SIGNAL	Pin	SIGNAL	SIU PIN
1	A5	IN6	16	B12	IN21
2	B5	IN7	17	A13	IN22
3	A6	IN8	18	B13	IN23
4	B6	IN9	19	A14	IN24
5	A7	IN10	20	B14	IN25
6	B7	IN11	21	A15	IN26
7	A8	IN12	22	B15	IN27
8	B8	IN13	23	A16	IN28
9	A9	IN14	24	B16	IN29
10	B9	IN15	25	B25	OPTO 1
11	A10	IN16	26	A26	OPTO 2
12	B10	IN17	27	B26	OPTO 3
13	A11	IN18	28	A27	OPTO 4
14	B11	IN19	29	B27	COMMON
15	A12	IN20	30	A32	DC Ground
			31	B31	AC LRef

Figure 66
Input Assembly – Wiring Diagram

INPUT ASSEMBLY SIU PIN ASSIGNMENTS

PIN	SIU ROW A	SLOT1–12 PINS	SIU ROW B	SLOT1–12 PINS	SIU ROW C	SLOT1–12 PINS
1	+24 in	DCP–14	+24 in	+24 in	I/O 47	Slot 9–20
2	I/O 0	Slot 1–2C	I/O 1	Slot 3–4C	I/O 48	Slot 10–7
3	I/O 2	Slot 5–6C	I/O 3	Slot 7–8C	I/O 49	Slot 10–20
4	I/O 4	Slot 9–10C	I/O 5	Slot 11/12C	I/O 50	Slot 11–7
5	I/O 6	Slot 1F	I/O 7	Slot 1W	I/O 51	Slot 11–20
6	I/O 8	Slot 2F	I/O 9	Slot 2W	I/O 52	Slot 12–7
7	I/O 10	Slot 3F	I/O 11	Slot 3W	I/O 53	Slot 12–20
8	I/O 12	Slot 4F	I/O 13	Slot 4W	SB1 TxD +	Com 2 RXD+
9	I/O 14	Slot 5F	I/O 15	Slot 5W	SB1 TxD –	Com15 RXD–
10	I/O 16	Slot 6F	I/O 17	Slot 6W	SB1 RxD +	Com 1 TXD+
11	I/O 18	Slot 7F	I/O 19	Slot 7W	SB1 RxD –	Com14 TXD–
12	I/O 20	Slot 8F	I/O 21	Slot 8W	SB1 TxC +	Com 4 RXC+
13	I/O 22	Slot 9F	I/O 23	Slot 9W	SB1 TxC –	Com17 RXC–
14	I/O 24	Slot 10F	I/O 25	Slot 10W	SB1 RxC +	Com 3 TXC+
15	I/O 26	Slot 11F	I/O 27	Slot 11W	SB1 RxC –	Com16 TXC–
16	I/O 28	Slot 12F	I/O 29	Slot 12W	LINE SYNC. +	Com 9 LSync+
17	I/O 30	Slot 1–7	I/O 31	Slot 1–20	LINE SYNC. –	Com22 LSync–
18	I/O 32	Slot 2–7	I/O 33	Slot 2–20	N RESET +	Com10NRESET+
19	I/O 34	Slot 3–7	I/O 35	Slot 3–20	N RESET –	Com23NRESET–
20	I/O 36	Slot 4–7	I/O 37	Slot 4–20	ASSY ADDR	Slots1–12(1)
21	I/O 38	Slot 5–7	I/O 39	Slot 5–20	INBUS RTS	Slots1–12(2)
22	I/O 40	Slot 6–7	I/O 41	Slot 6–20	SB2 TxD +	Com 6 RXD+
23	I/O 42	Slot 7–7	I/O 43	Slot 7–20	SB2 TxD –	Com19 RXD–
24	I/O 44	Slot 8–7	I/O 45	Slot 8–20	SB2 RxD +	Com 5 TXD+
25	I/O 46	Slot 9–7	Opto In1	CDC–1	SB2 RxD –	Com18 TXD–
26	Opto In 2	CDC–2	Opto In 3	CDC–3	SB2 TxC +	Com 8 RXC+
27	Opto In 4	CDC–4	OptoCommon	CDC–5	SB2 TxC –	Com21 RXC–
28	Address–0	ADC –7	Address–1	ADC –5	SB2 RxC +	Com 7 TXC+
29	Address–2	ADC –3	Address–3	ADC –1	SB2 RxC –	Com20 TXC–
30	INBUS TxD	Slots1–12(21)	INBUS RxD	Slots1–12(19)	SB2 INBUS TXC	NA
31	EQ GND		AC Line Ref	TC 31	SB2 INBUS RxC	NA
32	DC GND	DCP–16	DC GND	DCP–15	SIU ENABLE	SIU 24VDCGND

ADC ADDRESS PLUG
FRONT VIEW

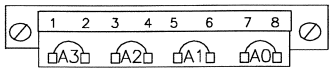

SIU INPUT ASSY	ADDRESS	ADDRESS PLUG BINARY
Input Assembly 1	1–2 7–8	1001
Input Assembly 2	1–2 5–6	1010
Input Assembly 3	1–2 5–6 7–8	1011
Input Assembly 4	1–2 3–4	1100
Input Assembly 5	1–2 3–4 7–8	1101

Jumper settings are ground true.
Install jumper for logic 1.

ADC DETAIL

Pin #	FUNCTION	Pin #	FUNCTION
1	Address 3	2	DC GROUND
3	Address 2	4	DC GROUND
5	Address 1	6	DC GROUND
7	Address 0	8	DC GROUND

COM
SB1/SB2
(Socket Face View)

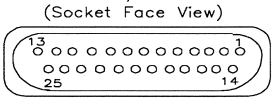

CDC
(Socket Face View)

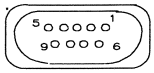

COM SB1/SB2 CONNECTOR

Pin	AT THE CONTROLLER	AT THE SIU	Pin	AT THE CONTROLLER	AT THE SIU
1	SB1 TXD+	SB1 RXD+	14	SB1 TXD–	SB1 RXD–
2	SB1 RXD+	SB1 TXD+	15	SB1 RXD–	SB1 TXD–
3	SB1 TXC+	SB1 RXC+	16	SB1 TXC–	SB1 RXC–
4	SB1 RXC+	SB1 TXC+	17	SB1 RXC–	SB1 TXC–
5	SB2 TXD+	SB2 RXD +	18	SB2 TXD–	SB2 RXD–
6	SB2 RXD+	SB2 TXD +	19	SB2 RXD–	SB2 TXD–
7	SB2 TXC+	SB2 RXC+	20	SB2 TXC–	SB2 RXC–
8	SB2 RXC+	SB2 TXC+	21	SB2 RXC–	SB2 TXC–
9	LINE SYNC+	LINE SYNC+	22	LINE SYNC–	LINE SYNC–
10	NRESET+	NRESET+	23	NRESET–	NRESET–
11	PWR DWN+		24	PWR DWN–	
12	+5VDC ISO		25	EQ GND	
13	ISO GND	DC GROUND			

CDC (Cabinet DC signal interconnect)

Pin #	FUNCTION	Pin #	FUNCTION
CDC–1	OPTO INPUT 1	CDC–2	OPTO INPUT 2
CDC–3	OPTO INPUT 3	CDC–4	OPTO INPUT 4
CDC–5	OPTO INPUT COMMON	CDC–6	Spare
CDC–7	Spare	CDC–8	Spare
CDC–9	Spare		

TITLE:
INPUT ASSEMBLY CONNECTORS

Rev Date 08–09–07

6–5–38

Figure 67
Input Assembly – Connectors

SB1/SB2 COMMUNICATIONS HARNESS

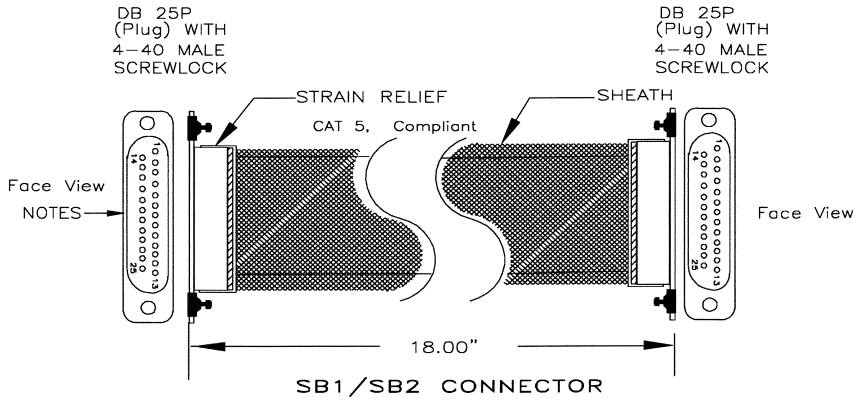

SB1/SB2 CONNECTOR

Pin	AT THE CONTROLLER	AT THE SIU	Pin	AT THE CONTROLLER	AT THE SIU
1	SB1 TXD+	SB1 RXD+	14	SB1 TXD−	SB1 RXD−
2	SB1 RXD+	SB1 TXD+	15	SB1 RXD−	SB1 TXD−
3	SB1 TXC+	SB1 RXC+	16	SB1 TXC−	SB1 RXC−
4	SB1 RXC+	SB1 TXC+	17	SB1 RXC−	SB1 TXC−
5	SB2 TXD+	SB2 RXD +	18	SB2 TXD−	SB2 RXD−
6	SB2 RXD+	SB2 TXD +	19	SB2 RXD−	SB2 TXD−
7	SB2 TXC+	SB2 RXC+	20	SB2 TXC−	SB2 RXC−
8	SB2 RXC+	SB2 TXC+	21	SB2 RXC−	SB2 TXC−
9	LINE SYNC+	LINE SYNC+	22	LINE SYNC−	LINE SYNC−
10	NRESET+	NRESET+	23	NRESET−	NRESET−
11	PWR DWN+		24	PWR DWN−	
12	+5VDC ISO		25	EQ GND	
13	ISO GND				

Pairs are twisted 1−14, 2−15 etc.

SB3 COMMUNICATIONS HARNESS

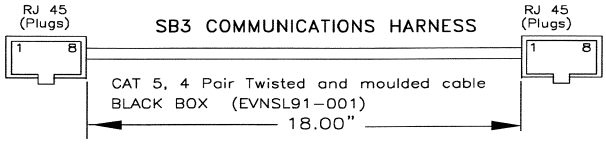

SB3 CONNECTOR

Pin #	PAIR COLOR	AT THE PDA	AT THE OUTPUT ASSEMBLY
1	WHITE ORANGE	SB3 TXC+	SB3 RXC+
2	ORANGE	SB3 TXC−	SB3 RXC−
3	WHITE GREEN	AC− RAW	AC−RAW
4	BLUE	SB3 TXD+	SB3 RXD+
5	WHITE BLUE	SB3 TXD−	SB3 RXD−
6	GREEN	AC−RAW	AC−RAW
7	WHITE BROWN	SB3 RXD+	SB3 TXD+
8	BROWN	SB3 RXD−	SB3 TXD−

NOTES:

1. SB1/SB2 cable for Housing 3 shall be a minimum of 3.5' and cable shall use a cover with Jackscrews on both sides.
2. The 18" cable shall use a cover with Jackscrews on both sides.
3. 4−40 Screwlock (kit) shall be equivalent to NorComp 160−000−001−041 where 041 is yellow chromate and 051 is nickel.

4. Color Denotes Twisted Pair sets (Solid + Stripe)

TITLE: SERIAL BUS HARNESSES

Rev Date 06-22-05

6−5−39

Figure 68
Serial Bus Harness

CC HARNESS

Pins	FUNCTION	Pins	FUNCTION
1–1	MC COIL from PP	2–2	AC+ RAW to PP and Fan
3–3	TR Coil from PP	4–4	Signal Flash
5–5	From Front Door Switch	6–6	From Auto Flash Switch
7–7	Annex B Reserved	8–8	From Rear Door Switch
9–9	CB trip status CMU to PP	10–10	AC+ RAW
11–11	AC– RAW	12–12	12 VAC to Police Panel
13–13	MANUAL CONTROL EN in	14–14	INTERVAL ADV Out
15–15	STOP TIME Switch		

DCP (DC Power) CONNECTOR

Pin #	FUNCTION	Pin #	FUNCTION
PDC 14	+24VDC	PDC 13	+12VDC
PDC 16	DC GROUND	PDC 15	DC GROUND

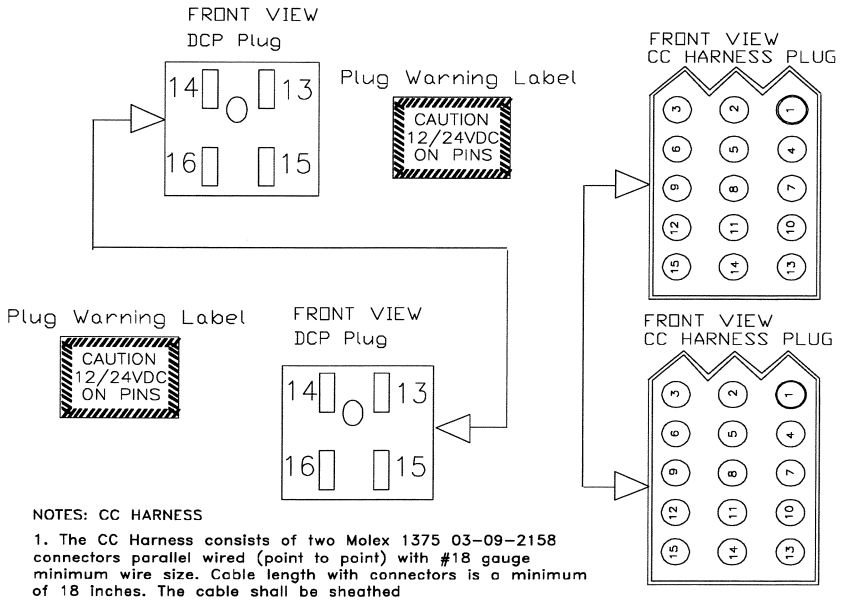

NOTES: CC HARNESS

1. The CC Harness consists of two Molex 1375 03–09–2158 connectors parallel wired (point to point) with #18 gauge minimum wire size. Cable length with connectors is a minimum of 18 inches. The cable shall be sheathed

NOTES: DCP HARNESS

1. The DCP Harness consists of two BEAU P5404–LAB connectors parallel wired (point to point) with #14 gauge wire size. The cable length with connectors is a miminmum of 18 inches. Cable ends shall be covered with low profile right angle cable clamp ends The cable shall be sheathed. Housing #3 requires a cable 3.5 feet long.

TITLE: DC POWER/POLICE PANEL HARNESSES

Rev Date 03-03-06

6–5–40

Figure 69
DC Power/Police Panel Harnesses

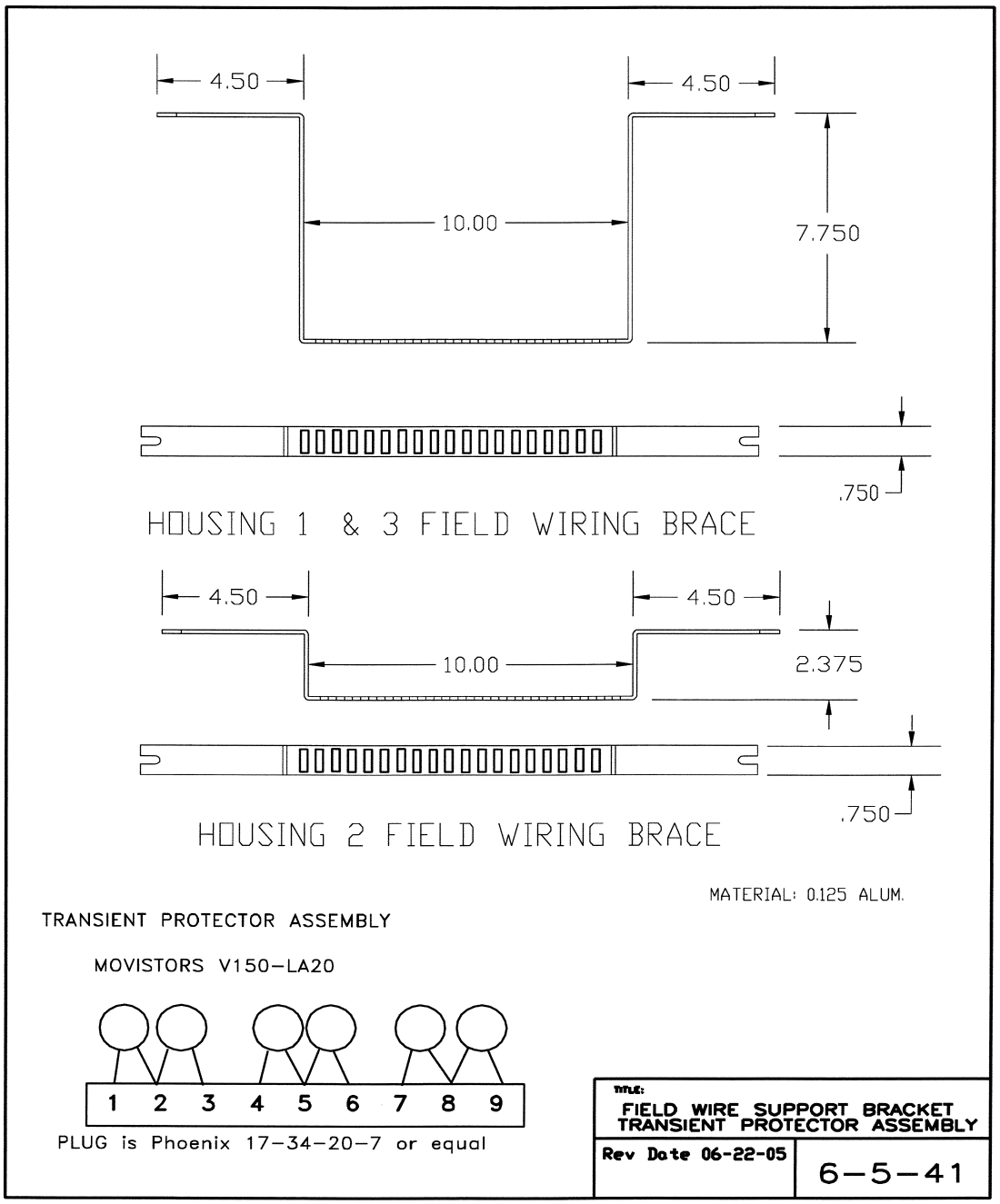

Figure 70
Field Wire Support Bracket/Transient Protector Assembly

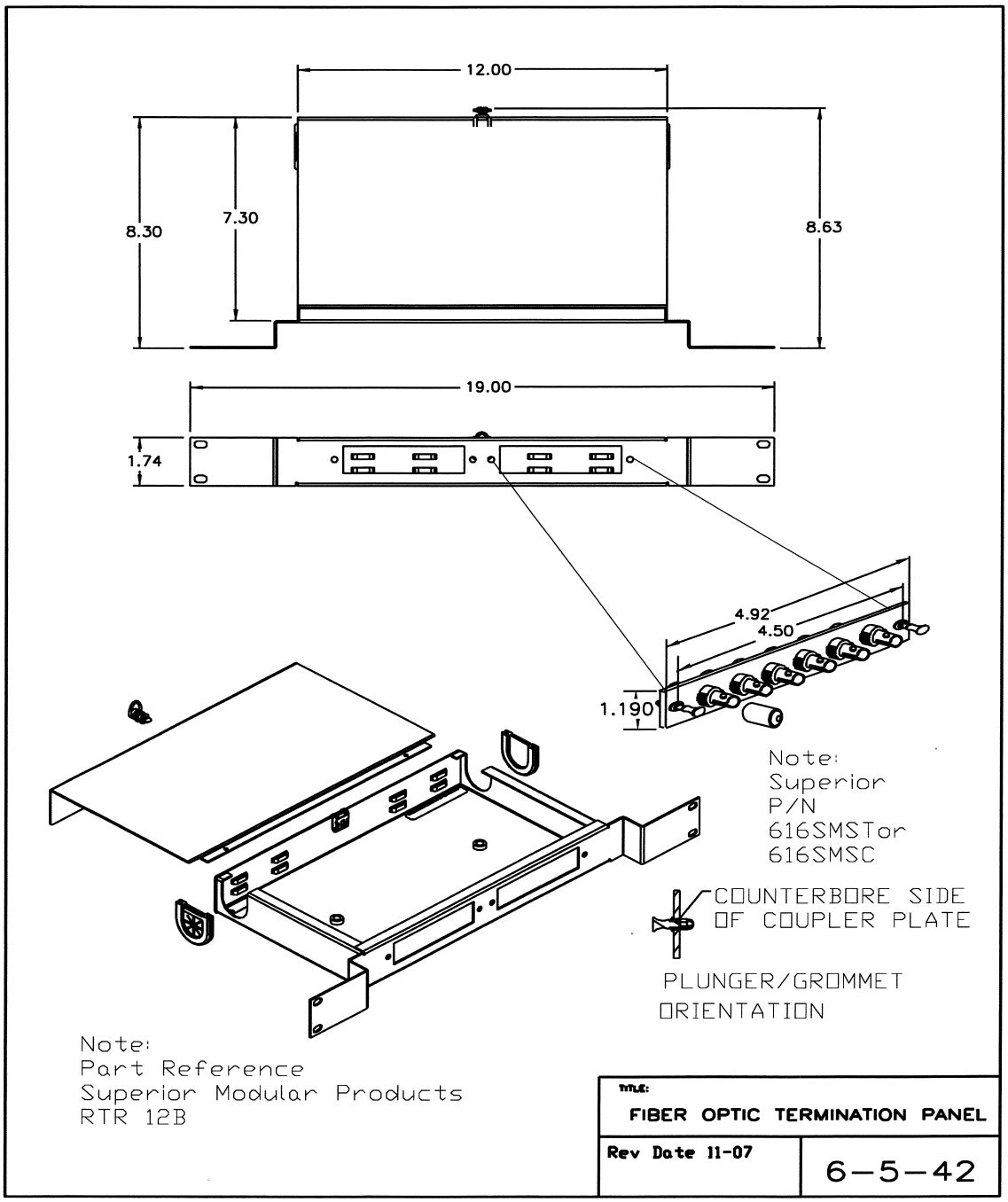

Figure 71
Fiber Optic Termination Panel
Provide P/N 616SMSC

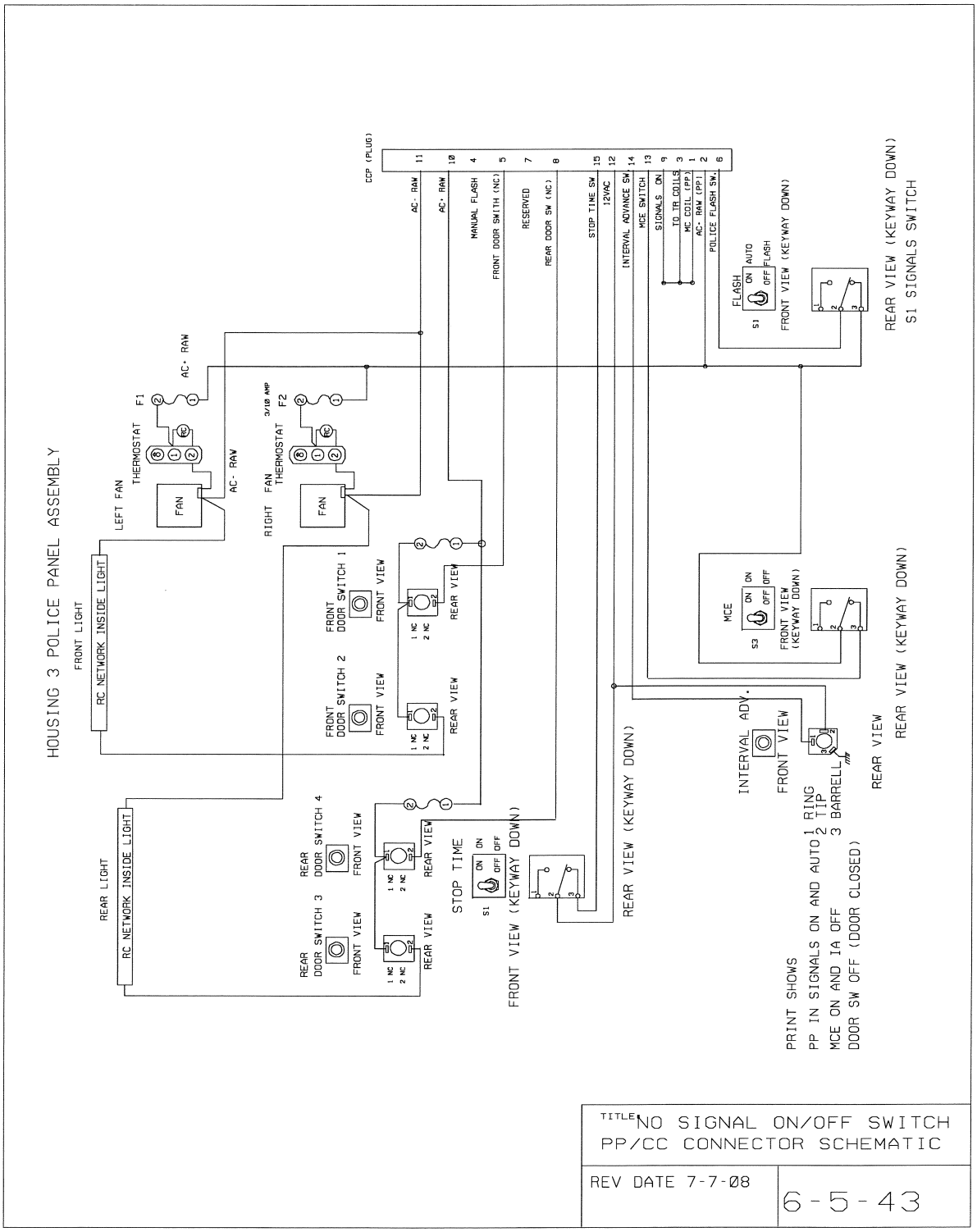

Figure 72
Police Panel and CC Schematic (CMU Bypass)

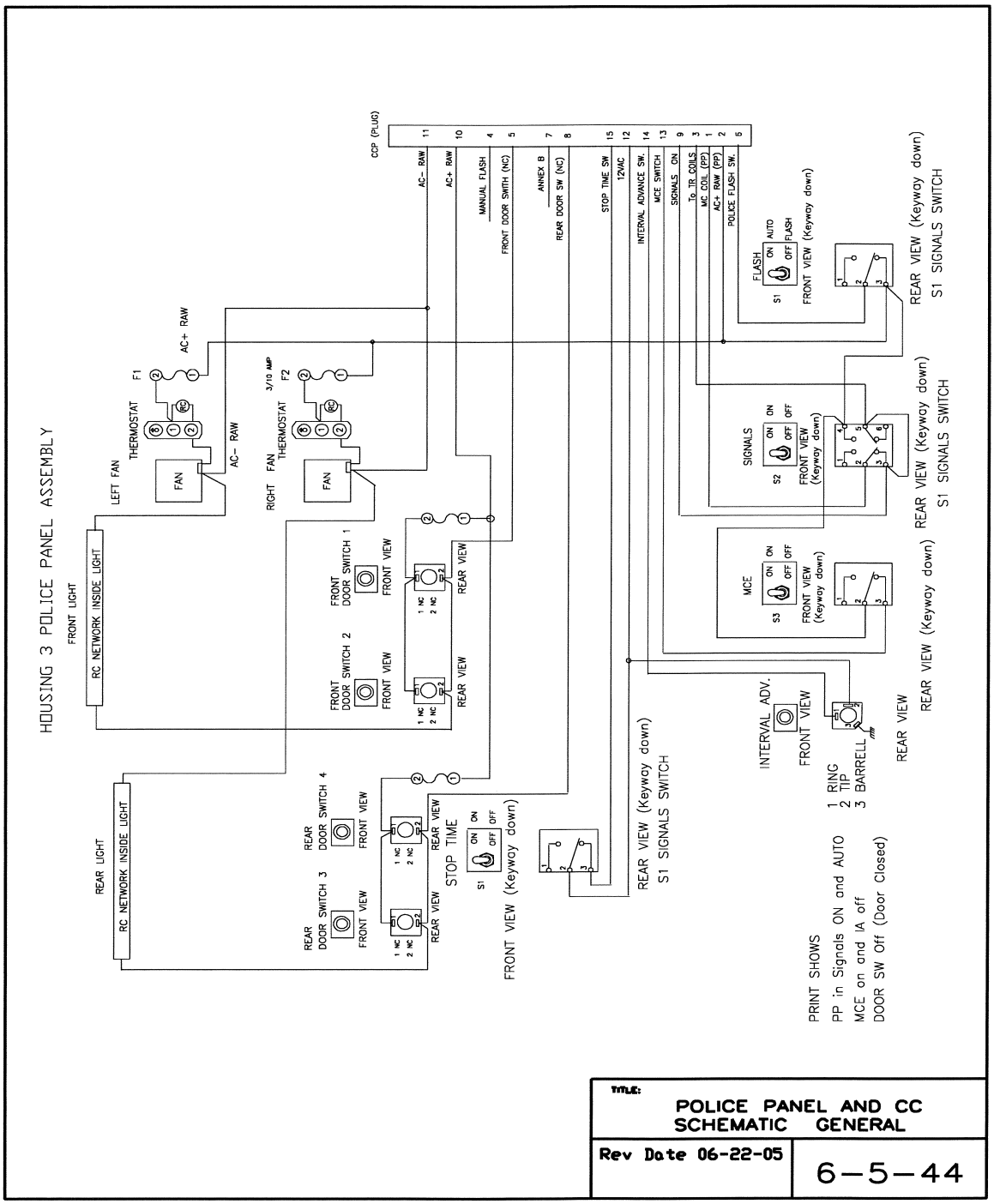

Figure 73
Police Panel and CC Schematic General

2.11 GLOSSARY

A. Terms and Abbreviations. Wherever the following terms or abbreviations are used, the intent and meaning is interpreted as follows:

- A Ampere
- AC Alternating Current
- AC+ 120 Volts AC, 60 hertz ungrounded power source
- AC- 120 Volts AC, 60 hertz grounded return to the power source
- CITY OF HOUSTON The CITY OF HOUSTON director, acting either directly or through properly authorized agents, such agents acting within the scope of the particular duties delegated to them.
- ANSI American National Standard Institute
- ASCII American Standard Code for Information Interchange
- Assembly A complete machine, structure or unit of a machine that was manufactured by fitting together parts and/or modules
- ASTM American Society for Testing and Materials
- AWG American Wire Gage
- C Celsius
- C Language The ANSI C Programming Language
- Cabinet An outdoor enclosure generally housing the controller unit and associated equipment
- Certificate of Compliance A certificate signed by the manufacturer of the material or the manufacturer of assembled materials stating that the materials involved comply in all respects with the requirements of the specifications

- Channel An information path from a discrete input to a discrete output.
- Component Any electrical or electronic device
- Contractor The person or persons, Manufacturer, firm, partnership, corporation, vendor or combination thereof, who have entered into a contract with the CITY OF HOUSTON, as party of the second part or legal representative
- Controller Unit That portion of the controller assembly devoted to the operational control of the logic decisions programmed into the assembly
- CPU Central Processing Unit
- CTS Clear To Send
- DAT Program The CITY OF HOUSTON's Diagnostic and Acceptance Test Program
- dB Decibel
- dBa Decibels above reference noise, adjusted
- DC Direct Current
- DCD Data Carrier Detect (Receive Line Signal Detector)
- DIN Deutsche Industrie Norm
- DRAM Dynamic random access memory. Random access means that the processor can access any part of the memory or data storage space directly rather than having to proceed sequentially from some starting place. DRAM is dynamic in that it needs to have its storage cells refreshed or given a new electronic charge every few milliseconds.
- EG Equipment Ground
- EIA Electronic Industries Association
- EMI Electro Magnetic Interference

- EPROM Ultraviolet Erasable, Programmable, Read Only Memory Device
- EEPROM Electrically Erasable, Programmable, Read Only Memory Device
- Equal Connectors: comply with physical dimensions, contact material, plating and method of connection. Devices: comply to function, pin out, electrical and operating parameter requirements, access times and interface parameters of the specified device
- ETL Electrical Testing Laboratories, Inc.
- Firmware A computer program or software stored permanently in PROM, EPROM, ROM or semi-permanently in EEPROM
- FLASH A +5 VDC powered IC Memory Device with nonvolatile, electrically erasable, programmable, 100K read/write minimum cycles and fast access time features
- FPA Front Panel Assembly
- HEX Hexadecimal
- Hz Hertz
- IC Integrated Circuit
- I.D. Identification
- IEEE Institute of Electrical and Electronics Engineers
- ISO Isolated
- Jumper A means of connecting/disconnecting two or more conductive by soldering/desoldering a conductive wire or by PCB post jumper
- KB Kilobytes
- Keyed Means by which like connectors can be physically altered to prevent improper insertion.

- Laboratory The established laboratory of the CITY OF HOUSTON or other laboratories authorized by the CITY OF HOUSTON to test materials involved in the contract
- LCD Liquid Crystal Display
- LED Light Emitting Diode
- LOGIC Negative Logic Convention (Ground True) State
- LSB Least Significant Byte
- lsb Least Significant Bit
- MB megabyte
- MSB Most Significant Byte
- msb Most Significant Bit
- m Milli
- MCU/MPU/ IMP Micro Controller Unit, Microprocessor Unit, or Integrated Multiprotocol Processor
- MIL Military Specifications
- MODEM Modulation/Demodulation Unit
- Module A functional unit that plugs into an assembly
- Motherboard A printed circuit connector interface board with no active or passive components
- MOS Metal-Oxide Semiconductor
- MOV Metal-Oxide Varistor

- MS Military Standards
- N Newton: SI unit of force
- N.C. Normally closed contact
- N.O. Normally open contact
- NA Presently Not Assigned. Cannot be used by the Manufacturer for other purposes
- NEMA National Electrical Manufacturer's Association
- NETA National Electrical Testing Association, Inc.
- n nano
- NLSB Next Least Significant Byte
- nlsb Next Least Significant Bit
- NMSB Next Most Significant Byte
- nmsb Next Most Significant Bit
- PCB Printed Circuit Board
- PDA Power Distribution Assembly
- PLA/PAL Programmable Array Logic Device
- Power Failure A Power Failure is said to have occurred when the incoming line voltage falls below 92 +/- 2 VAC for 50 milliseconds. See Power Conditions.
- Power Restoration Power is said to be restored when the incoming line voltage equals or exceeds 97 +/- 2 VAC for 50 milliseconds. See Power Conditions.
- Power Conditions 16.7 ms (one 60 Hertz cycle) reaction period is allowed to be included in the 50 milliseconds timing or added to (67 milliseconds duration). The

hysteresis between power failure and power restoration voltage settings must be a min. of 5 VAC with a threshold drift of no more than 0.2 VAC.

- ppm Parts per million
- PWM Pulse Width Modulation
- RAM Random Access Memory
- RF Radio Frequency
- RMS Root-Mean-Square
- ROM Read Only Memory Device
- RTS Request to Send
- R/W Controller Unit Read/Write Control Line
- RxD Received Data
- SCI Serial Communications Interface
- SDLC Synchronous Data Link Control
- S Logic State
- s second
- Second Sourced Produced by more than one Manufacturer
- SRAM Static Random Access Memory Device
- SW Switch
- TB Terminal Block
- TOD Time Of Day Clock

- Triac Silicon-Controlled Rectifier which controls power bilaterally in an AC switching circuit

- TTL Transistor-Transistor Logic

- Thumb Screw Device (TSD) A retractable screw fastener with projecting stainless steel screw, spring and natural aluminum knob finish. (TSD No.2 must be flat black.)

  TSD No.1 - 8-32 SOUTHCO #47-62-301-20 or equal.
  TSD No.2 - 8-32 SOUTHCO #47-62-301-60 or equal.
  TSD No.3 - M3 SOUTHCO #47-82-101-10 or equal.

- TxD Transmitted Data

- u Micro

- UL Underwriter's Laboratories, Inc.

- VAC Voltage Alternating Current (root mean square)

- VDC Voltage Direct Current

- VME Versa Module Eurocard, VMEbus Standard IEEE P1014/D1.2

- x Number Value

- XX Manufacturer's Option

- WDT Watchdog Timer: A monitoring circuit, external to the device watched, which senses an Output Line from the device and reacts

2.12LEGACY DEVICE IMPLEMENTATION

A prototyping effort was conducted along with the development of this ITS Cabinet Standard. During the early stages of the prototyping effort, there were no SIU, AMU, and CMU devices available. As a result, a C1 and C11 interconnect list was developed to establish a method for using legacy 2070 controller applications. The list was developed with the Caltrans Model 332 and Model 336 Housing 2 Cabinets in mind. ITS Cabinet Housing #3 (with two internal racks) was the

target prototype model being deployed in Harris County Texas, Housing 1 and Housing 2 ITS Cabinets have been deployed in small numbers.

The Input Assemblies and Output Assemblies are equipped with "Test Connectors" that are tied to the Detector Pins F and W on the Input Assembly and to the DC Switch Pack drives on the Output Assembly. While not specifically prototyped, the NEMA "A," "B," and "C" connectors could be assigned in-lieu of the C1 and C11 connectors to provide an interconnection of legacy NEMA devices within the ITS Cabinet.

END SECTION

SECTION 16731

MODEL 2070 CONTROLLER UNIT

PART 1 GENERAL

1.01 SECTION INCLUDES

A. This specification defines the minimum detailed requirements applicable to the Type 2070 Advanced Transportation Controller (ATC) unit. The Advanced Transportation Controller (ATC) is a general purpose programmable controller that is intended for continuous unattended operation in harsh environments.

B. This specification defines specific, interchangeable modules that are combined to form a Type 2070 ATC that is capable of running control software that might be provided from a variety of providers. This specification defines several module options that can be arranged in a variety of composition configurations to meet the needs of the user.

C. This specification lays out compositions for Full, NEMA, Lite, and ITS configurations. The Type 2070 version of the ATC is designed such that all components are fully standardized and are therefore interchangeable.

1.02 UNIT PRICES

A. Measurement

This Item will be measured as each traffic signal controller unit furnished, or furnished and installed complete and in place.

B. Payment

The work performed and materials furnished in accordance with this Item and measured as provided under "Measurement" as each specified controller unit furnished or furnished and installed, and made fully functional and operational and tested in accordance with the requirements in this specification.

1.03 WARRANTY

A. All materials furnished will be warranted by the supplier for a period of two (2) years from date of delivery.

1.04 CONTROLLER DESCRIPTIONS

A. Controller Housing. The Type 2070 controller defines a controller housing that is intended to fit an EIA 19 in. rack mounted form commonly found in the Type 332 and

ITS family of cabinets. A NEMA base module is defined for those NEMA TS1 and TS2 shelf mounted applications.

B. CPU Module. The CPU module consists of the main CPU, memory, software and interfaces to the remainder of the controller. There are three CPU module configurations identified in this standard. The Type 2070-1A is a two-board configuration that has a VME-based CPU board and a Transition Board. The Type 2070-1B configuration consists of a single board module. The Type 2070-1C configuration is intended to interface with the "engine board" specified by the ATC v5.2 standard.

C. Field I/O Module. The Field I/O Module provides a mechanism for input and output interfaces. There are three options for the Field I/O Module. The Type 2070-2A Modules is intended to provide a parallel I/O interface with the Type 332 family of cabinets using the C1S connector. The Type 2070-2B Module is intended to provide a serial I/O interface to the ITS cabinet family and the NEMA interface to TS1 cabinets. The Type 2070-2N is for the NEMA TS2 Type 1 cabinets.

D. Front Panel Module. A controller Front Panel usually contains a keyboard and display that comprise the user field interface. The Front Panel on the Type 2070 controller is optional. This standard identifies three front panel options: the Type 2070-3A Front Panel includes a large character (4 lines of 40 characters) Liquid Crystal Display (LCD), the Type 2070-3B Front Panel includes a small character (8 lines of 40 characters) LCD, and the Type 2070-3C contains only a serial connection for interfacing with a notebook computer or some other handheld computing device.

E. Power Supply Module. A power supply module is used to convert 120 volt power to voltages required to operate the electronics inside the Type 2070 controller unit. This power supply must meet certain minimum electrical characteristics defined herein for its intended use. This standard identifies four options for the Power Supply: The Type 2070-4A identifies a 10 ampere power supply that is needed for those cases there is a need to support the VME cage assembly, and the Type 2070-4B identifies a 3.5 ampere power supply that is typically used in the "Lite" controller configurations. The Type 2070-4N (A and B) identifies the corresponding power supplies needed to support the NEMA TS1 and TS2 standards. This, however, does not preclude a Manufacturer or a DEPARTMENT from requiring a specific power supply form factor so that it is consistent across a wide range of packages that may be employed by that DEPARTMENT.

F. VME Cage Assembly. The VME Cage Assembly is an optional expansion module for the Type 2070 ATC. The Type 2070-5 consists of a five-slot 3U VME card rack. The use of the VME Cage Assembly requires the use of the Type 2070-4A 10-ampere power supply.

G. Communications Modules. This standard includes a variety of serial and modem communications modules. The 2070-6 series of modules are for internal modems and the Type 2070-7 series of modules are for serial communications.

H. NEMA Interface. This standard includes requirements for an optional module to interface with the NEMA TS1 and NEMA TS2 Type 2 cabinets. The Type 2070-8 NEMA Field I/O Module is an external module that attaches to the bottom of the 2070 and provides for the typical "A," "B," and "C" NEMA connectors.

1.05 CONTROLLER REQUIREMENTS

A. General. All furnished equipment must be new and unused. Vacuum or gaseous tubes and electro-mechanical devices (unless specifically called out) must not be used.

B. Controller Configurations. Controller Versions provided here are EXAMPLES of possible Controller Configurations.

		2070L	2070 LS	2070 LC	2070 LCS	2070 N1	2070 N2	2070 N2C
	ASSOCIATED DEVICES							
1	Type 2070-1A CPU Module					1		
2	Type 2070-1B CPU Module	1	1				1	
3	Type 2070-1C CPU Module			1	1			1
4	Type 2070-2A Field I/O Module	1		1				
5	Type 2070-2B Field I/O Module		1		1	1	1	1
6	Type 2070-3 Front Panel Assy.	1	1	1	1	1	1	1
7	Type 2070-4A Power Supply	1	1	1	1			
8	Type 2070-4AN Power Supply					1	1	1
9	Type 2070-5 VME Cage Assy.							
10	Type 2070-8 NEMA Base					1	1	1
11	Type 2070-2N Field I/O Module						1	1
12	Type 2070-6 Comm Module							
13	Type 2070-7 Comm Module	1*	1*					

* Indicates Optional Units for any configuration.

2070 L is a basic configuration currently using the 1B CPU Module.

2070 LS is the basic L version that replaces the 2A FIO with a 2B communication interface to drive the serial cabinet.

2070 LC and LCS are the same units using the 1C CPU Module.

2070N versions include 1A, VME ,1B and 1C CPU Modules. The 2N Field I/O module is designed to replace the 2070-8 NEMA Base and use the TS2 serial interface.

1.06 DOCUMENTATION

A. Manuals. Two copies of Manual Documentation must be supplied for each item purchased up to 200 manuals per order. The manual must be bound in durable covers made of either 65-pound stock paper or clear plastic. The manual must be printed on 8-1/2 in. by 11 in. paper, with the exception that schematics, layouts, parts lists and plan details may be on 11 in. by 17 in. sheets, with each sheet neatly folded to 8-1/2 in. by 11 in. size. A minimum of Times New Roman or Arial 10 point font must be used for all manual text, excluding drawings and schematics. Drawing text may use a smaller font size.

1. Manual Contents. Each manual must include the following sections in the order listed:

   a. Table of Contents

   b. Glossary

   c. Manufacturer Contact Information
      Address
      Telephone Number
      Fax Number
      General Email Address

   d. General Description

   e. General Characteristics

   f. Installation

   g. Adjustments

   h. Theory of Operation
      Systems Description (include block diagram).
      Detailed Description of Circuit Operation.

   i. Maintenance
      Preventive Maintenance.
      Trouble Analysis.
      Trouble Shooting Sequence Chart.
      Wave Forms.
      Voltage Measurements.
      Alignment Procedures.

j. Parts List (include circuit and board designation, part type and class, power rating, component manufacturer, mechanical part manufacturer, data specification sheets for special design components and original manufacturer's part number).

k. Electrical Interconnection Details & Drawings.

l. Schematic and Logic Diagram

m. Assembly Drawings and a pictorial diagram showing physical locations and identification of each component or part.

n. The date, serial numbers, model numbers and revision numbers of equipment covered by the manuals must be printed on the front cover of the manuals.

2. Draft Manual. A preliminary draft of the manual must be submitted, when required, to the CITY OF HOUSTON for approval prior to final printing.

B. Packaging. Each item delivered must be individually packed in its own shipping container. When loose Styrofoam is used for packing the item, the item must be sealed in a plastic bag to prevent direct contact with the Styrofoam.

C. Delivery. Each item delivered for testing must be complete, including manuals, and ready for testing.

D. Metals. All sharp edges and corners must be rounded and free of any burrs.

1. Aluminum. Sheet must be 63 gauge American Standard (0.060-in.) minimum thick Type 3003-H14 or Type 5052-H32 ASTM Designation B209 aluminum alloy. Rod, Bar and Extruded must be Type 6061-T6, or equal.

2. Stainless Steel. Sheet must be annealed or one-quarter-hard complying with the ASTM Designation: A666 for Type 304, Grades A or B, stainless steel sheet.

3. Cold Rolled Steel. Sheet, Rod, Bar and Extruded must be Type 1018/1020.

a. Plating. All cold roll steel must be plated. All plating must be either cadmium plating meeting the requirements of Federal Specification QQ-P-416C, Type 2 Class 1 or zinc plating meeting the requirements of ASTM B633-85 Type II SC4.

E. Mechanical Hardware. All bolts, nuts, washers, screws, hinges and hinge pins must be stainless steel unless otherwise specified.

F. Electrical Isolation. Within the circuit of any device, module, or Printed Circuit Board (PCB), electrical isolation must be provided between DC logic ground, equipment ground and the AC- conductor. They must be electrically isolated from each other by 500 megohms, minimum, when tested at the input terminals with 500 VDC.

G. Daughter Boards. Keyboards and LCD/LED Displays are considered daughter boards. Daughter boards must be mechanically secured with a minimum of four spacers/metal screws. Connectors must be either Flat Cable or PCB Headers. Components are to be mounted under the daughter board.

PART 2 PRODUCTS

2.01 COMPONENTS

A. General. All components must be second sourced and must be of such design, fabrication, nomenclature or other identification as to be purchased from a wholesale distributor or from the component manufacturer. When a component is of such special design that it precludes the purchase of identical components from any wholesale distributor or component manufacturer, one spare duplicate component must be furnished with each 20, or fraction thereof, components used. The electronic circuit design must be such that all components of the same generic type, regardless of manufacturer, must function equally in accordance with the specifications.

B. Electronic Components.

1. No device to be socket mounted unless specifically called out.

2. No component to be operated above 80% of its maximum rated voltage, current or power ratings. Digital components must not be operated above 3% over their nominal voltage, current or power ratings.

3. No component to be provided where the manufactured date is three years older than the contract award date. The design life of all components, operating for twenty-four hours a day and operating in their circuit application, must be ten years or longer.

4. Components must be arranged so they are easily accessible, replaceable and identifiable for testing and maintenance. Where damage by shock or vibration exists, a clamp, fastener, retainer, or hold-down bracket must support the component mechanically.

5. The Manufacturer must submit detailed engineering technical data on all components at the request of the City of Houston. The Manufacturer must certify that the component application meets the requirements of this standard.

C. Capacitors. The DC and AC voltage ratings as well as the dissipation factor of a capacitor must exceed the worst-case design parameters of the circuitry by 150%. Capacitor encasements must be resistant to cracking, peeling and discoloration. All capacitors must be insulated and must be marked with their capacitance values and working voltages. Electrolytic capacitors must not be used for capacitance values of less than 1.0 microfarad and must be marked with polarity.

D. Potentiometers. Potentiometers with ratings from 1 to 2 watts must meet Military Type RV4 requirements. Under 1 Watt potentiometers must be used only for trimmer type function. The potentiometer power rating must be at least 100% greater than the maximum power requirements of the circuit.

E. Resistors. Fixed carbon film, deposited carbon, or composition-insulated resistors must conform to the performance requirements of Military Specifications MIL-R-11F or MIL-R-22684. All resistors must be insulated and be marked with their resistance values. Resistance values must be indicated by the EIA color codes, or stamped value. The value of the resistors must not vary by more than 5% between -37 degrees C and 74 degrees C.

1. Special ventilation or heat sinking must be provided for all 2- watt or greater resistors. They must be insulated from the PCB.

F. Semiconductor Devices.

1. All transistors, integrated circuits, and diodes must be a standard type listed by EIA and clearly identifiable.

2. All metal oxide semiconductor components must contain circuitry to protect their inputs and outputs against damage due to high static voltages or electrical fields.

3. Device pin "1" locations must be properly marked on the PCB adjacent to the pin.

G. Transformers and Inductors. All power transformers and inductors must have the manufacturer's name or logo and part number clearly and legibly printed on the case or lamination. All transformers and inductors must have their windings insulated, be protected to exclude moisture, and their leads color coded with an approved EIA color code or identified in a manner to facilitate proper installation.

H. Triacs. Each triac with a designed circuit load of greater than 0.5 Amperes at 120 VAC must be mounted to a heat sink with thermal conductive compound or material, in addition to being mechanically secured.

I. Circuit Breakers. Circuit breakers must be listed by UL or ETL. The trip and frame sizes must be plainly marked (marked on the breaker by the manufacturer), and the ampere rating visible from the front of the breaker. Contacts must be silver alloy and enclosed in an arc-quenching chamber. An ambient air temperature range of from -18 degrees C to 50 degrees C must not influence overload tripping. The minimum Interrupting Capacity must be 5,000 amperes, RMS when the breaker is secondary to a UL approved fuse or primary circuit breaker and both breakers in concert provide the rated capacity. For circuit breakers 80 amperes and above, the minimum interrupting capacity must be 10,000 amperes, RMS. Circuit breakers must be the trip-free type with medium trip delay characteristic (Carlingswitch Time Delay Curve #24 or equal).

1. Load Circuit Breaker Auxiliary Internal Switches. The Load Circuit Breakers used to power Switch Packs must have auxiliary switches. The auxiliary switches must

"open" when the load breaker has tripped and the system will transfer the power from the Main Contactor to the Flash or Blank condition.

J. Fuses. All Fuses that are resident in a bayonet style fuse holder must have the fuse size rating labeled on the holder or on the panel adjacent to the holder. Fuses must be easily accessible and removable without use of tools.

K. Switches.

1. Dip. Dual-inline-package, quick snap switches must be rated for a minimum of 30,000 operations per position at 50 milliamperes, 30 VDC. The switch contact resistance must be 100 milliohms maximum at 2 milliamperes, 30 VDC. The contacts must be gold over brass.

2. Logic. The switch contacts must be rated for a minimum of 1-ampere resistive load at 120 VAC and must be silver over brass (or equal). The switch must be rated for a minimum of 40,000 operations.

3. Control. The switch contacts must be rated for a minimum of 5 amperes resistive load at 120 VAC or 28 VDC and be silver over brass (or equal). The switch must be rated for a minimum of 40,000 operations.

4. Power. Ratings must be the same as CONTROL, except the contact rating must be a minimum of 10 amperes at 125 VAC.

L. Terminal Blocks. The terminal blocks must be barrier type, rated at 20 amperes and 600 VAC RMS minimum. The terminal screws must be 0.3125 in. minimum length nickel-plated brass binder head type with screw inserts of the same material. Screw size is called out under the associated file, panel or assembly.

M. Screw Lug and Cam Driven Connectors. Provided the connectors mate, screw lug cam driven devices or crimp pin connectors must be allowable if the interface is part of a harness. For field termination, screw lug and cam driven assemblies are interchangeable for field wiring termination, provided they both accommodate 22-gauge wire on the inputs and 22-gauge wire on the outputs.

N. Wiring, Cabling and Harnesses.

1. Harnesses must be neat, firm and properly bundled with external protection. They must be tie-wrapped and routed to minimize crosstalk and electrical interference. Each harness must be of adequate length to allow any conductor to be connected properly to its associated connector or termination point. Conductors within an encased harness have no color requirements. Printed circuit motherboards are to be used where possible to eliminate or reduce cabinet wiring.

2. Wiring containing AC must be bundled separately or shielded separately from all DC logic voltage control circuits.

3. Wiring must be routed to prevent conductors from being in contact with metal edges. Wiring must be arranged so that any removable assembly may be removed without disturbing conductors not associated with that assembly.

4. All conductors, except those that can be readily traced, must be labeled. Labels attached to each end of the conductor must identify the destination of the other end of the conductor.

5. All conductors must conform to MIL-W-16878E/1 or better and have a minimum of 19 strands of copper. The insulation must be polyvinyl chloride with a minimum thickness of 10 mils or greater. Where insulation thickness is 15 mils or less, the conductor must conform to MIL-W-16878/17.

6. Conductor color identification must be as follows:

   AC- circuits – white

   Equip. Ground - solid green or continuous green color with 1 or more yellow stripes

   DC logic ground - continuous white with a red stripe

   AC+ circuits - continuous black or black with colored stripe

   DC logic ungrounded or signal - any color not specified

O. Indicators and Character Displays.

1. All indicators and character displays must be readily visible at a radius of up to 4 feet within the cone of visibility when the indicator is subjected to 97,000 lux (9,000 foot-candles) of white light with the light source at 45 degrees (+/-2 degrees) to the front panel.

2. All indicators and character displays must have a minimum 90 degrees cone of visibility with its axis perpendicular to the panel on which the indicator is mounted. All indicators must be self-luminous. All indicators must have a rated life of 100,000 hours minimum. Each LED indicator must be white or clear when off. Indicators supplied on equipment requiring handles must be mounted such that a horizontal clearance is provided.

3. Liquid Crystal Displays (LCD) must be readable at temperatures of -20 degrees C to +70 degrees C. All controller unit functions are required to operate at temperatures of –37 degrees C to +74 degrees C.

P. Connectors. Connectors must be keyed to prevent improper insertion of the wrong connector where equipment damage or operator injury may result. The mating connectors must be designated as the connector number and male/female relationship, such as C1P (plug or PCB edge connector) and C1S (socket).

1. Type T. Type T connector must be a single row, 10 position, feed through terminal block. The terminal block must be a barrier type with 6-32, 0.25 in. or longer, nickel plated brass binder head screws. Each terminal must be permanently identified as to its function.

2. Plastic Circular and Type M. Pin and socket contacts for connectors must be beryllium copper construction subplated with 1.27 microns nickel and plated with 0.76 microns gold. Pin diameter must be 0.0618 in. All pin and socket connectors must use the AMP #601105-1 or #91002-1 contact insertion tool and the AMP #305183 contact extraction tool or equal.

3. Card Edge and Two Piece PCB.

   a. Edge connectors must have bifurcated gold-plated contacts. The PCB receptacle connector must meet or exceed the following:

Operating Voltage:	600 VAC (RMS)
Current Rating:	5.0 Amperes
Insulation Material:	Diallyl Phthalate or Thermoplastic
Insulation Resistance:	5,000 Megohms
Contact Material:	Copper alloy plated with 0.00005 in. of nickel and 0.000015 in. of gold
Contact Resistance:	0.006 Ohm maximum

   b. The two-piece PCB connector must meet or exceed the DIN 41612.

   c. The PCB 22/44 Connector must have 22 independent contacts per side; dual sided with 0.156 in. contact centers.

4. Wire Terminal. Each wire terminal must be solderless with PVC insulation and a heavy-duty short -locking spade type connector. Crimp terminal connectors using a Controlled-Cycle type crimping tool.

5. Flat Cable. Each flat cable connector must be designed for use with 26 AWG cable; have dual cantilevered phosphor bronze contacts plated with 0.00015 in. of gold over 0.00005 in. of nickel; and have a current rating of 1 Ampere minimum and an insulation resistance of 5 Megohms minimum.

6. PCB Header Post. Each PCB header post must be 0.025 in. square by 0.3425 in. high from the plane of the PCB to the end of the pin; be mounted on 0.10 in. centers; and be tempered hard brass plated with 0.00015 in. of gold over 0.00005 in. of nickel.

7. PCB Header Socket. Each PCB header socket block must be nylon or diallyl phthalate. Each PCB header socket contact must be removable, but crimp-connected to its conductor. List the part number of the extraction tool recommended by its manufacturer. Each PCB header socket contact must be brass or phosphor bronze plated with 0.0015 in. of gold over 0.00005 in. of nickel.

Q. Surge Protection Device. The surge suppression device must comply with ANSI/IEEE C62.41 (100 Kilohertz Ring Wave, the 1.2/50 microseconds – 8/20 Combination Wave and the EFT Burst) at voltages and currents specified at "Location Category B2" and at "Test Severity" level III (i.e. up to 4.0 Kilovolts, open-circuit).

2.02 MECHANICAL REQUIREMENTS

A. Assemblies. All assemblies must be modular, easily replaceable and incorporate plug-in capability for their associated devices or PCBs. Assemblies must be provided with two guides for each plug-in PCB or associated device (except relays). The guides must extend to within 0.75 in. from the face of either the socket or connector and front edge of the assembly. If Nylon guides are used, attach the guides securely to the file or assembly chassis.

B. Locking Devices. All screw type fasteners must utilize locking devices or locking compounds except finger screws, which are captive.

C. PCB Design and Connectors. No components, traces, brackets or obstructions are to be within 0.125 in. of the board edge (guide edges). The manufacturer's name or logo, model number, serial number, and circuit issue or revision number must appear and be readily visible on all PCBs.

D. Model and Serial Numbers.

1. The manufacturer's model number, and circuit issue or revision number must appear on the rear panel of all equipment supplied (where such panel exists). In addition to any assignment of model numbers by the manufacturer, the TYPE number must be displayed on the front panel in bold type, at least 0.25 in. high.

2. A permanent label must be affixed to the inside near and center floor of the Type 2070 unit chassis when viewed from the front. The label must display the unit's serial number and be permanent and easy to read.

E. Workmanship. Workmanship must conform to the requirements of this specification and be in accordance with the highest industry standards.

F. Tolerances. The following tolerances must apply, except as specifically shown on the plans or in these specifications:

TYPE	DIMENSIONAL TOLERANCE

Sheet Metal	+/-0.0525 in.
PCB	+0 in., - 0.010 in.
Edge Guides	+/-0.015 in.

*Note: These dimensional tolerances do not apply to material gauge or thickness.

2.03 ENGINEERING

A. Human Engineering. The equipment must be engineered for simplicity, ease of operation and maintenance.

1. Knobs must be a minimum of 0.5 in. in diameter and a minimum separation of 0.5 in. edge to edge.

2. PCBs must slide smoothly in their guides while being inserted into or removed from the frame and fit snugly into the plug-in PCB connectors. PCBs must require a force no less than 5 pounds-force or greater than 50 pounds-force for insertion or removal.

B. Design Engineering. The design must be inherently temperature compensated to prevent abnormal operation. The circuit design must include such compensation as is necessary to overcome adverse effects due to temperature in the specified environmental range. The design must take into consideration the protection of personnel from all dangerous voltages.

C. Generated Noise. No item, component or subassembly is to emit an audible noise level exceeding the peak level of 55 dBa when measured at a distance of one meter away from its surface, except as otherwise noted. No item, component or subassembly is to emit a noise level sufficient to interfere with processing and communication functions of the controller circuits.

2.04 PRINTED CIRCUIT BOARDS

A. Design, Fabrication and Mounting.

1. All contacts on PCBs must be plated with a minimum thickness of 0.00003 in. gold over a minimum thickness of 0.000075 in. nickel.

2. PCB design must be such that when a component is removed and replaced, no damage is done to the board, other components, conductive traces or tracks.

3. Fabrication of PCBs must be in compliance with Military Specification MIL-P-13949, except as follows:

a. NEMA FR-4 glass cloth base epoxy resin copper clad laminates 0.0625 in. minimum thickness must be used. Inter-component wiring must be by laminated copper clad track having a minimum weight of 0.2 ounces per square foot with adequate cross section for current to be carried. All copper tracks must be plated or soldered to provide complete coverage of all exposed

copper tracks. Jumper wires to external PCB components must be from plated-through padded holes and as short as possible.

b. All PCBs must conform to Section 3.3 of Military Specification MIL-P-13949G Grade of Pits and Dents and be of Grade B quality (3.5.1.3) or better. The class of permissible bow or twist must be Class C (Table V) or better. The class of permissible warp or twist must be Class A (Table II) or better.

c. Omit Sections 4.2 through 6.6 of Military Specification MIL-P-13949G (inclusive) except as referenced in previous sections of this specification.

d. The mounting of parts and assemblies on the PCB must conform to Military Specification MIL-STD-275E, except as follows:

(1) Semiconductor devices that dissipate more than 250 milliwatts or cause a temperature rise of 10 degrees C or more must be mounted with spacers, transipads or heat sinks to prevent contact with the PCB.

(2) When completed, remove all residual flux from the PCB.

(3) The resistance between any two isolated, independent conductor paths must be at least 100 Megohms when a 500 VDC potential is applied.

(4) All PCBs must be coated with a moisture resistant coating.

(5) Where less than 0.25 in. lateral separation is provided between the PCB (or the components of a PCB) and any metal surface, a 0.0625 in. (+/-0.0005 in.) Thick Mylar (polyester) plastic cover must be provided on the metal to protect the PCB.

e. Each PCB connector edge must be chamfered at 30 degrees from board side planes. The key slots must also be chamfered so that the connector keys are not extracted upon removal of board or jammed upon insertion. The key slots must be 0.045 in. (+/-0.005 in.) for 0.1 in. spacing and 0.055 in. (+/-0.005 in.) for 0.156 in. spacing.

B. Soldering.

1. Hand soldering must comply with Military Specification MIL-STD-2000.

2. Automatic flow soldering must be a constant speed conveyor system with the conveyor speed set at optimum to minimize solder peaks or points. Temperature must be controlled to within +/- 8 degrees C of the optimum temperature. The soldering process must result in the complete coverage of all copper runs, joints and terminals with solder except that which is covered by an electroplating process. Wherever clinching is not used, provide a method of holding the components in the proper position for the flow process.

3. If exposure to the temperature bath is of such a time-temperature duration, as to come within 80% of any component's maximum specified time-temperature exposure, that component must be hand soldered to the PCB after the flow process has been completed.

C. Definitions. Definitions for the purpose of this section on PCBs must be taken from MIL-P-55110D Section 3.3 and any current addendum.

D. Jumpers. Jumpers are not allowed unless called out in the specifications or approved by the City of Houston.

2.05 QUALITY CONTROL

A. Components. All components must be lot sampled to assure a consistent high conformance standard to the design specification of the equipment.

B. Subassembly, Unit or Module. Complete electrical, environmental and timing compliance testing must be performed on each module, unit, printed circuit or subassembly. Components will be tested as a complete controller assembly. Housing, chassis, and connection terminals must be inspected for mechanical sturdiness, and harnessing to sockets to be electrically tested for proper wiring sequence. The equipment must be visually and physically inspected to assure proper placement, mounting, and compatibility of subassemblies.

C. Pre-delivery Repair.

1. Any defects or deficiencies found by the inspection system involving mechanical structure or wiring must be returned through the manufacturing process or special repair process for correction.

2. PCB flow soldering is allowed a second time if copper runs and joints are not satisfactorily coated on the first run. Do not flow solder a PCB more than twice.

3. Hand soldering is allowed for printed circuit repair.

2.06 ELECTRICAL, ENVIRONMENTAL AND TESTING REQUIREMENTS

The framework of this section, along with the specific test requirements contained herein, is excerpted with modifications from NEMA TS2-2003 - Section 2 by permission of NEMA. Excerpt © 2002 AASHTO / ITE / NEMA.

A. General. This section establishes the limits of the environmental and operational conditions in which the Controller Assembly will perform. This section defines the minimum test procedures that may be used to demonstrate conformance of a device type with the provisions of the standard. These test procedures do not verify equipment performance under every possible combination of environmental requirements covered by this standard. Nothing in this testing profile must be construed as to relieve the

requirement that the equipment provided must fully comply with these standards/specifications under all environmental conditions stated herein.

The City of Houston may wish to extend the testing profile or introduce additional tests to verify compliance. (Authorized Engineering Information).

B. Inspection. A visual and physical inspection must include mechanical, dimensional and assembly conformance to all parts of this standard.

C. Testing Certification.

1. A complete quality control / final test report must be supplied with each item. Quality control procedures must be submitted to the City of Houston prior to production. The test report must indicate the name of the tester and be signed by a responsible manager.

2. The quality control procedure and test report format must be supplied to the City of Houston for approval upon request. The quality control procedure must include the following, in the order shown:

   (a) Design Acceptance testing of all supplied components.

   (b) Physical and functional testing of all modules and items.

   (c) Environmental testing reports for all equipment.

   (d) Physical and functional testing of all items.

3. Separate certifications must be provided for Design and Production. Design Acceptance testing must be performed with a fully loaded and functional Cabinet Assembly. Production testing must be performed as part of the City of Houston's procurement delivery procedures and that testing should be performed at the Major Unit level. (Authorized Engineering Information).

4. Certain portions of the test procedures contained in this standard my cause damage to the unit (e.g. protection devices may be aged) and are not recommended for routine Production testing. (Authorized Engineering Information)

D. Definitions of Major Units of the Cabinet Assembly. For the purpose of this section, "Major units of the Cabinet Assembly" must include the Controller Unit, Application Software for implementing the desired functionality, Cabinet Monitor Unit (CMU), Auxiliary Monitor Unit (AMU), Serial Interface Units (SIUs), Power Distribution Unit (PDA), Switch Packs, Flasher(s), and Detector(s).

E. Environmental and Operating Requirements. The requirements (voltage, temperature, etc.) of this section must apply in any combination.

1. Voltage and Frequency.

a. Operating Voltage. The nominal voltage must be 120 VAC, unless otherwise noted.

b. Operating Frequency. The operating frequency range must be 60 hertz (+/-3.0 hertz), unless otherwise noted.

2. Transients, Power Service. The Test Unit must maintain all defined functions when the independent test pulse levels specified below occur on the alternating-current power service.

a. High Repetition Noise Transients.

(1) The test pulses must not exceed the following conditions:

(a) Amplitude: 300 Volts, both positive and negative polarity.

(b) Peak Power: 2500 watts.

(c) Repetition: 1 pulse approximately every other cycle moving uniformly over the full wave in order to sweep across 360 degrees of the line cycle once every 3 seconds.

(d) Pulse Rise Time: 1 microsecond.

(e) Pulse Width: 10 microseconds.

(f) This test is performed without protection in place or operational.

This test is considered to be a minimum test requirement for the Test Unit complying with ANSI/IEEE C62.41. Regional conditions may warrant additional testing as described in ANSI/IEEE C62.41. (Authorized Engineering Information)

b. Low Repetition High Energy Transients.

(1) The test pulses must not exceed the following conditions:

(a) Amplitude: 600 Volts (+/-5 percent), both positive and negative polarity.

(b) Energy Source: Capacitor, oil filled, 10 microfarads (+/-10 percent), internal surge impedance less than 1 ohm.

(c) Repetition: 1 discharge every 10 seconds.

(d) Pulse Position: Random across 360 degrees of the line cycle.

(e) This test is performed with protection in place and operational.

This test is considered to be a minimum test requirement for the Test Unit complying with ANSI/IEEE C62.41. Regional conditions may warrant additional testing as described in ANSI/IEEE C62.41. (Authorized Engineering Information)

c. Nondestructive Transient Immunity.

(1) The Test Unit (with protection in place and operational) must be capable of withstanding a high energy transient having the following characteristics repeatedly applied to the alternating current input terminals (no other power connected to terminals) without failure of the test specimen:

(a) Amplitude: 1000 Volts (+/-5 percent), both positive and negative polarity.

(b) Energy Source: Capacitor, oil filled, 15 microfarads (+/-10 percent), internal surge impedance less than 1 ohm.

(c) Repetition: Applied to the Test Unit once every 2 seconds for a maximum of three applications for each polarity.

(d) After the foregoing, the Test Unit must perform all defined functions upon the application of nominal alternating current power.

This test is considered to be a minimum test requirement for the Test Unit complying with ANSI/IEEE C62.41 (100 Kilohertz Ring Wave, the 1.2/50 microseconds – 8/20 Combination Wave and the EFT Burst) at voltages and currents specified at "Location Category B2" and at "Test Severity" level III (i.e. up to 4.0 Kilovolts, open-circuit). Regional conditions may warrant additional testing as described in ANSI/IEEE C62.41. (Authorized Engineering Information)

d. Transients, Input-Output Terminals.

(1) The Test Unit (without protection in place or operational) must maintain all defined functions, when the test pulse occurs on the input-output terminals.

(a) Amplitude: 300 Volts, both positive and negative polarity.

(b) Pulse Source: 1000 ohms nominal impedance.

(c) Repetition: 1 pulse per second, for a minimum of 5 pulses per selected terminal.

(d) Pulse rise time: 1 microsecond.

(e) Pulse width: 10 microseconds.

This test is considered to be a minimum test requirement for the Test Unit complying with ANSI/IEEE C62.41. Regional conditions may warrant additional testing as described in ANSI/IEEE C62.41. (Authorized Engineering Information)

e. Temperature and Humidity. The Test Unit must maintain all programmed functions when the temperature and humidity ambients are within the specified limits defined herein.

(1) Ambient Temperature.

(a) The operating ambient temperature range must be from -37 degrees C to +74 degrees C. The storage temperature range must be from -45 degrees C to +85 degrees C.

(b) The rate of change in ambient temperature must not exceed 18 degrees C per hour, during which the relative humidity must not exceed 95 percent.

(2) Humidity.

(a) The relative humidity must not exceed 95 percent non-condensing over the temperature range of -37 degrees C to +74 degrees C.

(b) Above +46 degrees C, constant absolute humidity must be maintained. This will result in the relative humidity shown in Exhibit 3-1 for dynamic testing.

Table 1
AMBIENT TEMPERATURE VERSUS RELATIVE HUMIDITY AT BAROMETRIC PRESSURES (29.92 In. Hg.) (NON-CONDENSING)

Ambient Temperature/ Dry Bulb (in degrees C)	Relative Humidity (in percent)	Ambient Temperature/ Wet Bulb (in degrees C)
-37.0 to 1.1	10	-17.2 to 42.7
1.1 to 46.0	95	42.7
48.8	70	42.7
54.4	50	42.7
60.0	38	42.7
65.4	28	42.7
71.2	21	42.7
74.0	18	42.7

F. Test Facilities. All instrumentation required in the test procedures, such as voltmeters, ammeters, thermocouples, pulse timers, etc. must be selected in accordance with good

engineering practice. In all cases where time limit tests are required, the allowance for any instrumentation errors must be included in the limit test.

1. Variable Voltage Source: A variable source capable of supplying 20 amperes from 100 VAC to 135 VAC.

2. Environmental Chamber: An environmental chamber capable of attaining temperatures of -37 degrees C to +74 degrees C and relative humidity given in Table 1.

3. Transient Generators: Transient generators capable of supplying the transients outlined above.

G. Test Procedure: Transients, Temperature, Voltage, and Humidity

1. Test A: Placement in Environmental Chamber and Check-Out of Hook-Up

   a. Place the test unit in the environmental chamber. Connect the test unit AC input circuit to a variable voltage power transformer, voltmeter, and transient generator. The transient generator must be connected to the AC input circuit at a point at least 25 feet from the AC power source and not over 10 feet from the input to the test unit.

   b. Connect test switches to the appropriate terminals to simulate the various features incorporated into the test unit. Place these switches in the proper position for desired operation.

   c. Verify the test hook-up. Adjust the variable-voltage power transformer to 120 VAC and apply power to the test unit. Verify that the test unit goes through its prescribed startup sequence and cycles properly in accordance with the operation determined by the positioning of test switches in item b.

      Upon the satisfactory completion and verification of the test hook-up, proceed with Test B.

2. Test B: Transient Tests (Power Service)

   a. Program the test unit to dwell. Verify the input voltage is 120 VAC.

   b. Set the transient generator to provide high-repetition noise transients as follows:

      (1) Amplitude: 300 Volts (+/-5 percent), both positive and negative polarity.

      (2) Peak Power: 2500 watts.

      (3) Repetition Rate: One pulse every other cycle moving uniformly over the full wave in order to sweep once every 3 seconds across 360 degrees of line cycle.

(4) Pulse Rise Time: 1 microsecond.

(5) Pulse Width: 10 microseconds.

c. Apply the transient generator output to the AC voltage input for at least 5 minutes. Repeat this test for at least two conditions of dwell for the test unit. The test unit must continue to dwell without malfunction.

d. Program the test unit to cycle through normal operations. Turn on the transient generator (output in accordance with item 2) for 10 minutes, during which time the test unit must continue to cycle without malfunction.

e. Set a transient generator to provide high-repetition noise transients as follows:

(1) Amplitude: 300 Volts (+/-5 percent), both positive and negative polarity.

(2) Source Impedance: Not less than 1000 ohms nominal impedance.

(3) Repetition: One pulse per second for a minimum of five pulses per selected terminal.

(4) Pulse Rise Time: 1 microsecond.

(5) Pulse Width: 10 microseconds.

Program the test unit to dwell. Verify the input voltage is 120 VAC.

f. Apply the transient generator (output in accordance with item 5) between logic ground and the connecting cable termination of selected Field I/O input/output terminals of the test unit.

A representative sampling of selected input/output terminations must be tested. The test unit must continue to dwell without malfunction.

g. Program the test unit to cycle. Turn on the transient generator (output in accordance with item 5) and apply its output to the selected Field I/O input/output terminations. The test unit must continue to cycle without malfunction.

h. Reinstall protection and set a transient generator to provide low-repetition high-energy transients as follows:

(1) Amplitude: 600 Volts (+/-5 percent), both positive and negative polarity.

(2) Energy Discharge Source: Capacitor, oil-filled, 10 microfarads.

(3) Repetition Rate: One discharge each 10 seconds.

(4) Pulse Position: Random across 360 degrees of line cycle.

i. Program the test unit to dwell. Verify the input voltage is 120 VAC.

j. Discharge the oil-filled 10-microfarad capacitor ten times for each polarity across the AC voltage input. Repeat this test for at least two conditions of dwell. The test unit must continue to dwell without malfunction.

k. Program the test unit to cycle through normal operations. Discharge the capacitor ten times for each polarity while the test unit is cycling, during which time the test unit must continue to cycle without malfunction.

l. During the preceding transient tests, the test unit must continue its programmed functions.

   The test unit must not skip normal program intervals/steps or portions thereof when in normal operation; place false inputs or produce false outputs while in dwell; disrupt normal sequences in any manner; or change parameters.

m. Nondestructive Transient Immunity:

   (1) Turn off the AC power input to the test unit from the variable-voltage power source.

   (2) Apply the following high-energy transient to the AC voltage input terminals of the test unit (no other power connected to terminals):

      (a) Amplitude: 1000 V, both positive and negative polarity.

      (b) Peak Power Discharge: Capacitor, oil-filled, 15 microfarads.

      (c) Maximum Repetition Rate: Applied to the Cabinet Assembly once every 2 seconds for a maximum of three applications for each polarity.

   (3) Upon completion of the foregoing, apply 120 VAC to the test unit and verify that the test unit goes through its prescribed startup sequence and cycles properly in accordance with the programmed functions. The first operation of the over-current protective device during this test is not considered a failure of the test unit.

NOTE—Test C through G follow the profile indicated in Figure 1 to demonstrate the ability of the test unit to function reliably under stated conditions of temperature, voltage, and humidity.

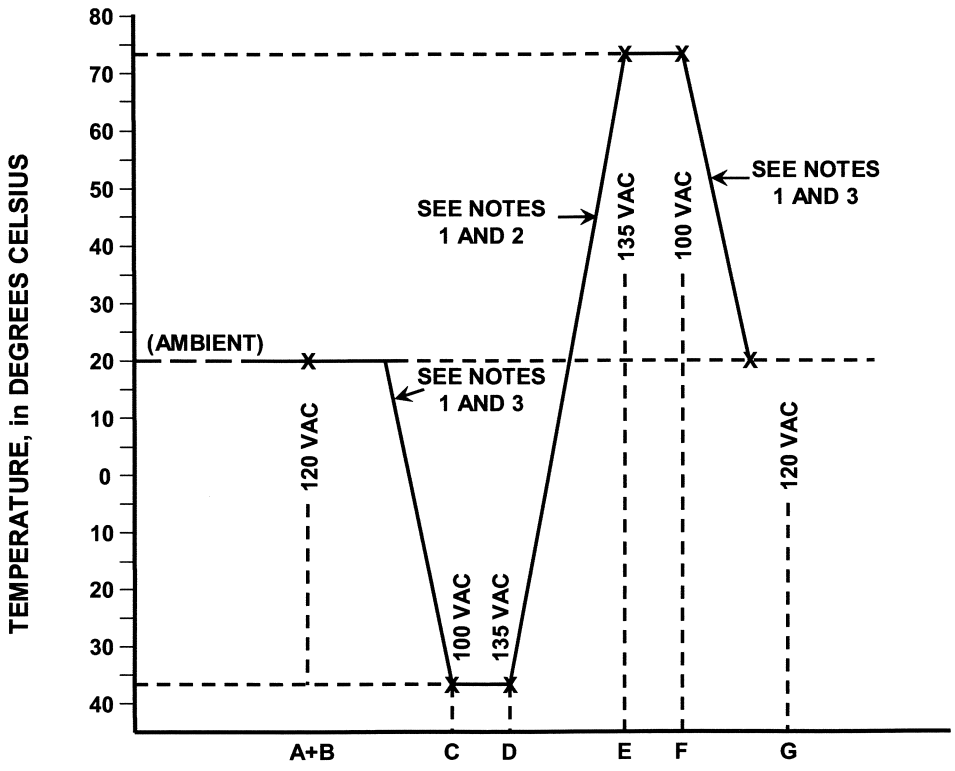

Figure 1
Test Profile

NOTES:

- The rate of change in temperature must not exceed 18 degrees C per hour
- Humidity controls must be set in conformance with the humidity given in Table 1 during the temperature change between Test D and Test E.
- If a change in both voltage and temperature are required for the next test, the voltage must be selected prior to the temperature change.

3. Test C—Low-Temperature Low-Voltage Tests

   a. Definition of Test Conditions

      (1) Environmental Chamber Door: Closed.

(2) Temperature: -37 degrees C.

(3) Low Voltage: 100 VAC.

(4) Humidity Control: Off.

b. Test Procedure: While at room temperature, adjust the input voltage to 100 VAC and verify that the test unit is still operable.

(1) With the test unit cycling through normal operations, lower the test chamber to -37 degrees C at a rate not exceeding 18 degrees C per hour. Allow the test unit to cycle for a minimum of 5 hours at -37 degrees C with the humidity controls in the off position. Then operate the test switches as necessary to determine that all functions are operable.

(2) Remove power from the test unit for a minimum period of 5 hours. Upon restoration of power, the test unit must go through its prescribed startup sequence and then resume cycling.

(3) With the test unit at -37 degrees C and the input voltage at 100 VAC, evaluate the following items against the respective standards:

(a) Power Interruption Tests

On satisfactory completion of this test, proceed with Test D.

4. Test D—Low-Temperature High-Voltage Tests

a. Definition of Test Conditions

(1) Environmental Chamber Door: closed.

(2) Low Temperature: -37 degrees C.

(3) High Voltage: 135 VAC.

(4) Humidity Controls: Off.

b. Test Procedure: While at -37 degrees C and with humidity controls off, adjust the input voltage to 135 VAC and allow the test unit to cycle for 1 hour. Then operate the test switches as necessary to determine that all functions are operable.

c. With the test unit at -37 degrees C and the input voltage at 135 VAC (humidity controls off), evaluate the following items against the respective standards:

(a) Power Interruption Tests

On satisfactory completion of this test, proceed to Test E.

5. Test E—High-Temperature High-Voltage Tests

   a. Definition of Test Conditions

      (1) Environmental Chamber Door: Closed.

      (2) High Temperature: +74 degrees C.

      (3) High Voltage: 135 VAC.

      (4) Humidity Controls: In accordance with the humidity given in Table 1.

   b. Test Procedure—With the test unit cycling, raise the test chamber to +74 degrees C at a rate not to exceed 18 degrees C per hour. Verify the input voltage is 135 VAC.

   c. Set the humidity controls to not exceed 95 percent relative humidity over the temperature range of +1.1 degrees C to +46 degrees C. When the temperature reaches +46 degrees C, readjust the humidity control to maintain constant absolute humidity; +42.7 degrees C wet bulb that results in the relative humidity shown in Table 1. Verify that the test unit continues to cycle satisfactory during the period of temperature increase and at established levels of relative humidity.

      (1) Allow the test unit to cycle for a minimum of 15 hours at +74 degrees C and 18 percent relative humidity. Then operate the test switches as necessary to determine that all functions are operable.

      (2) With the test unit at +74 degrees C and 18 percent relative humidity and the input voltage at 135 VAC, evaluate the following items against the respective standards:

         (a) Power Interruption Tests

      On satisfactory completion of this test, proceed to Test F.

6. Test F—High-Temperature Low-Voltage Tests

   a. Definition of Test Conditions

      (1) Environmental Chamber Door: Closed.

      (2) High Temperature: +74 degrees C.

      (3) Low Voltage: 100 VAC.

      (4) Humidity Controls: 18 percent relative humidity and +42.7 degrees C wet bulb.

b. Test Procedure: Adjust the input voltage to 100 VAC and proceed to operate the test switches to determine that all functions are operable. With the test unit at +74 degrees C and 18 percent relative humidity, +42.7 degrees C wet bulb, and the input voltage at 100 VAC, evaluate the following items against the respective standards:

(a) Power Interruption Tests

On satisfactory completion of this test, proceed to Test G.

7. Test G—Test Termination

a. Program the test unit to cycle.

b. Adjust the input voltage to 120 VAC.

c. Set the controls on the environmental chamber to return to room temperature, +20 degrees C (+/-5 degrees C), with the humidity controls in the off position. The rate of temperature change must not exceed 18 degrees C per hour.

d. Verify the test unit continues to cycle through normal operations properly.

e. Allow the test unit to stabilize at room temperature for 1 hour. Proceed to operate the test switches to determine that all functions are operable.

8. Test H—Appraisal of Equipment under Test

a. A failure is defined as any occurrence that results in other than normal operation of the equipment. (See sub-section item b. below for details.) If a failure occurs, the test unit must be repaired or components replaced, and the test during which failure occurred must be restarted from its beginning.

b. The test unit is considered to have failed if any of the following occur:

(1) If the test unit skips normal program intervals/steps or portions thereof when in normal operation, places false inputs, presents false outputs, exhibits disruption of normal sequence of operations, or produces changes in parameters beyond specified tolerances, or

(2) If the test unit fails to satisfy the requirements of Tests A to G, inclusive.

c. An analysis of the failure must be performed and corrective action taken before the test unit is retested in accordance with this standard. The analysis must outline what action was taken to preclude additional failures during the tests.

d. When the number of failures exceeds two, it must be considered that the test unit fails to meet these standards. The test unit may be completely retested after analysis of the failure and necessary repairs have been made in accordance with item c.

e. Upon completion of the tests, visually inspect the test unit. If material changes are observed which will adversely affect the life of the test unit, the cause and conditions must be corrected before making further tests.

f. Upon satisfactory completion of all of the tests described, test the unit in accordance with Vibration Test.

H. Vibration Test.

1. Purpose of Test. This test is intended to duplicate vibrations encountered by the test unit (individual major components) when installed at its field location.

   Fasten the test unit securely to the vibration test table prior to the start of the test.

2. Test Equipment Requirements.

   a. Vibration table with adequate table surface area to permit placement of the test unit.

   b. Vibration test consists of:

      (1) Vibration in each of three mutually perpendicular planes.

      (2) Adjustment of frequency of vibration over the range from 5 hertz to 30 hertz.

      (3) Adjustment of test table excursion (double amplitude displacement) to maintain a 'g' value, measured at the test table, of 0.5g; as determined by the following formula:

      $$g = 0.0511df^2$$

      Where:

      d = excursion in inches

      f = frequency in hertz

3. Resonant Search

   a. With the test unit securely fastened to the test table, set the test table for a double amplitude displacement of 0.015 inch.

   b. Cycle the test table over a search range from 5 hertz to 30 hertz and back within a period of 12.5 minutes.

   c. Conduct the resonant frequency search in each of the three mutually perpendicular planes.

   d. Note and record the resonant frequency determined from each plane.

(1) In the event of more than on resonant frequency in a given plane, record the most severe resonance.

(2) If resonant frequencies appear equally severe, record each resonant frequency.

(3) If no resonant frequency occurs for a given plane within the prescribed range, 30 hertz must be recorded.

4. Endurance Test

a. Vibrate the test unit in each plane at its resonant frequency for a period of 1 hour at amplitude resulting in 0.5g acceleration.

b. When more than one resonant frequency has been recorded, the test period of 1 hour must be divided equally between the resonant frequencies.

c. The total time of the endurance test must be limited to 3 hours, 1 hour in each of three mutually perpendicular planes.

5. Disposition of Equipment under Test

a. Examine the test unit to determine that no physical damage has resulted from the vibration tests.

b. Check the test unit to determine that it is functionally operable in all modes of its prescribed operation.

c. The test unit may be removed from the test table. Upon satisfactory completion of the vibration test, proceed with the shock (impact) test.

I. Shock (Impact) Test.

1. Purpose of Test. The purpose of this test is to determine that the test unit is capable of withstanding the shock (impact) to which it may reasonably be subjected during handling and transportation in the process of installation, repair, and replacement. It is to be noted that the test unit is not, at this time, in its shipping carton.

Fasten the test unit firmly to the specimen table. In each of its three planes the test, drop the unit from a calibrated height to result in a shock force of 10g.

2. Test Equipment Requirements.

a. Shock (impact) test fixture equivalent to that suggested by the simplified sketch shown in Figure 2.

b. The test table must have a surface area sufficient to accommodate the test unit.

c. Calibrate the test table and the items tested as indicated. This shock test defines the test shock to be 10g (+/-1g).

(1) Measure calibration of the test equipment for these shock tests by three accelerometers having fixed shock settings of 9g, 10g, and 11g. They must be Inertia Switch Incorporated ST-355, or the equivalent. Attach these devices rigidly to the test table.

(2) Calibration of the fixture for each item to be tested is as follows:

(a) Place a dummy load weighing within 10 percent of the test unit on the table.

(b) Reset the three accelerometers and drop the test table from a measured height.

(c) Observe that the accelerometers indicate the following:

- Activate the 9g accelerometer.
- The 10g unit may or may not be actuated.
- The 11g unit must not be actuated.

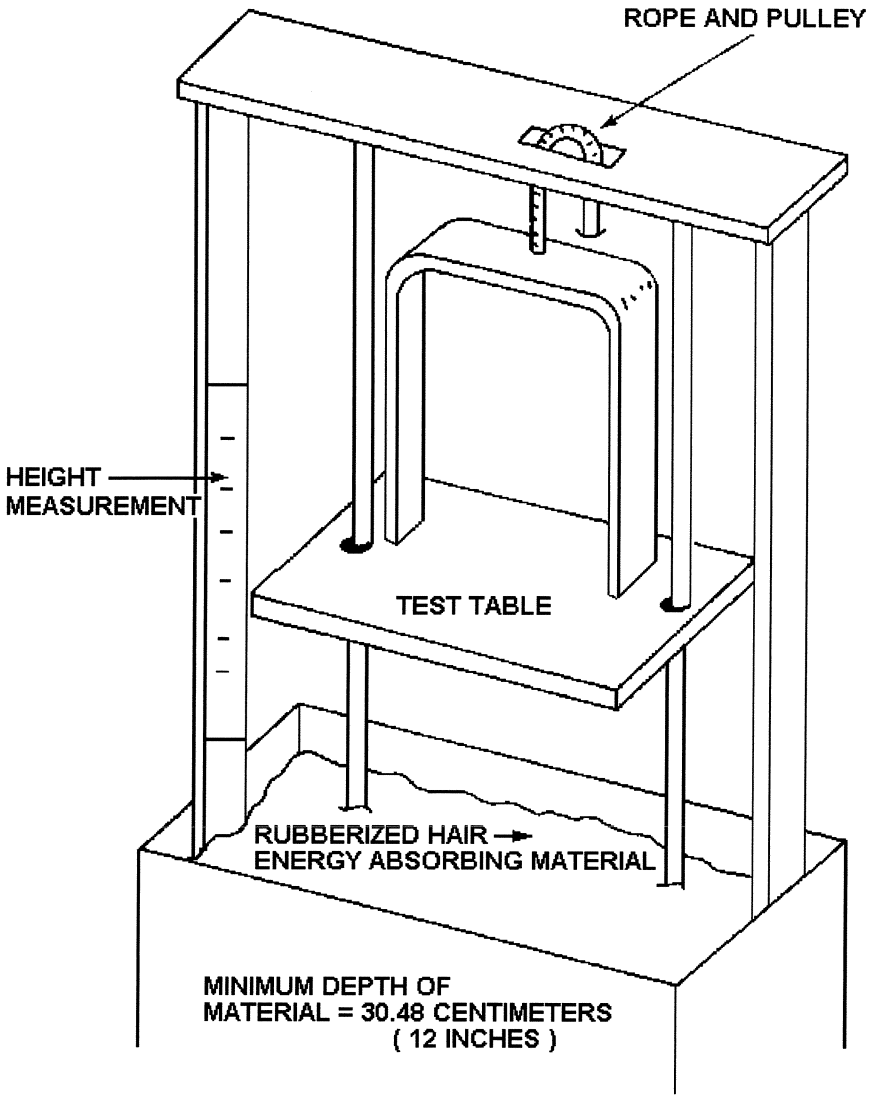

Figure 2
Shock Test Fixture

(3) Repeat calibration test (a) and (b) adjusting the height of the drop until, on ten successive drops, the following occurs:

(a) The 9g unit is actuated ten times.

(b) The 10g unit is actuated between four to eight times.

(c) The 11g unit is not actuated on any of the ten drops.

3. Test Procedure.

   a. The calibration height of the drop for the particular item under test as determined in Test Equipment Requirements must be used in this procedure.

   b. Secure the test unit to the test table surface so that the test unit rests on one of its three mutually perpendicular planes.

   c. Raise the test table to the calibrated height.

   d. Release the test table from the calibrated height, allowing a free fall into the box of energy absorbing material below.

   e. Repeat the drop test for each of the remaining two mutually perpendicular planes, using the same calibrated height for each drop test of the same test unit.

   f. The observations of the accelerometer for the three tests of the test item are:

      (1) The 9g unit is actuated for all three tests. (Repeat the calibration if the unit is not actuated.)

      (2) The 10g unit may or may not be actuated in these tests.

      (3) The 11g unit is not actuated on any drop. (If the unit is actuated, repeat the calibration only if the test unit has suffered damage.)

4. Disposition of Test Unit.

   a. Check the test unit for any physical damage resulting from the drop tests.

   b. Check the test unit to determine that it is functionally operable in all modes of its prescribed operation.

   c. Satisfactory completion of all environmental tests, including the shock (impact) is required.

J. Power Interruption Test Procedures. Conduct the following power interruption tests at low input voltage (100 VAC) and high input voltage (135 VAC) at -37 degrees C, and +74 degrees C.

1. Short Power Interruption. While the Test Unit is cycling through normal operations, remove the input voltage for a period of 475 milliseconds. Upon restoration of the input voltage, check to insure that the Test Unit continues normal operation as though no power interruption has occurred. Repeat this test three times.

2. Voltage Variation. All circuits of the Test Unit must be subjected to slowly varying line voltage during which the Test Unit must be subjected to line voltage that is slowly lowered from a nominal 120 VAC line voltage to 0 VAC at a rate of not

greater than 2 Volts per second. The line voltage must then be slowly raised to 100 VAC at which point the Test Unit must resume normal operation without operator intervention. Perform this test at both -37 degrees C and +74 degrees C, at a nominal 120 VAC line voltage. Repeat this test three times.

3. Rapid Power Interruption. Subject the Test Unit to rapid power interruption testing of the form that the power is off for 350 milliseconds and on for 650 milliseconds for a period of 2 minutes. Perform power interruption through electromechanical contacts of an appropriate size for the load. During this testing, the controller must function normally and continue normal sequencing (operation) at the conclusion of the test. This test must be performed at both -37 degrees C and +74 degrees C, at a nominal 120 VAC line voltage. Repeat this test three times.

2.07 TYPE 2070 CONTROLLER UNIT

A. General.

1. Module Descriptions. The Controller Unit is composed of the Type 2070 Unit CHASSIS, along with other modules and assemblies. The following is a list of Type 2070 versions, their interface rolls and composition:

Unit Version	Description
Type 2070V Unit	Provides directly driven VME and mates to 170 & ITS cabinets. It consists of: Unit CHASSIS, 2070-1A TWO BOARD CPU, 2070-2A (2B if ITS CABINET) FI/O, 2070-3A FRONT PANEL, 2070-4A POWER SUPPLY, and 2070-5 VME CAGE ASSEMBLY.
Type 2070L Unit	LITE Unit mates to the 170 & ITS cabinets. It consists of: UNIT CHASSIS, 2070-1B CPU, 2070-2A (2B if ITS CABINET), FI/O, 2070-3B FRONT PANEL and 2070- 4A or B POWER SUPPLY.
Type 2070LS Unit	LITE unit mates to ITS serial cabinets only. It consists of: UNIT CHASSIS, 2070-1B CPU, 2070-2B FI/O, 2070-3C FRONT PANEL and 2070-4 A or B POWER SUPPLY.

2. Unit Configuration. The Type 2070 Controller Unit Version defines the module composition to be delivered as follows:

No.	Item	Description	Composition		
			2070V Unit	2070L Unit	2070LS Unit
1	---	UNIT CHASSIS	Y	Y	Y
2	TYPE 2070-1A	CPU MODULE, MULTIPLE BOARD-VME	Y	---	---
3	TYPE 2070-1B	CPU MODULE, SINGLE BOARD- SERIAL HUB	---	Y	Y
4	TYPE 2070-2A	FIELD I/O MODULE (FI/O for 170 Cabinet)	Y	Y user selection Y	---
5	TYPE 2070-2B	FIELD I/O MODULE (ITS & NEMA Cabinets)	---		Y
6	TYPE 2070-3A	FRONT PANEL MODULE (FP), DISPLAY A	Y	---	---
7	TYPE 2070-3B	FRONT PANEL MODULE (FP), DISPLAY B	---	Y	---
8	TYPE 2070-3C	FRONT PANEL MODULE (FP), BLANK	---	---	Y
9	TYPE 2070-4A	POWER SUPPLY MODULE, 10 AMP	Y	Y user selection Y	Y user selection Y
10	TYPE 2070-4B	POWER SUPPLY MODULE, 3.5 AMP	---		
11	TYPE 2070-5A	VME CAGE ASSEMBLY	Y	---	---

2070V UNIT	1+2+4+6+9+11	Provides directly driven VME and mates to 170 and ITS cabinets
2070L UNIT	1+3+(4 or 5)+7+(9 or 10)	LITE Unit mated to 170 and ITS cabinets
2070LC UNIT	1+3+5+8+(9 or 10)	LITE unit mates to ITS cabinets only

a. The communications and option modules/assemblies must be called out separately from the unit version. The composition weight must not exceed 25 pounds.

3. Metalwork. The CHASSIS Top and Bottom, Internal Structure Supports, Back Plane Mounting Surface, Module Plates, Power Supply Enclosure, and Front Panel must be made of 63-gauge minimum aluminum sheet. The CHASSIS Side panels must be 80-gauge minimum sheet.

4. Power Fail and Power Restoration Operation. It is noted that the Power Failure Power Restoration operations of this unit are specific to the requirements of the user. All associated modules are to comply to said operations.

5. Power Limitations. 2070 UNIT module / assembly power limitations are as follows:

Types	+5VDC	+12VDC ISO	+12VDC ser	-12 VDC ser
MCB	750 milliamperes	-----	-----	-----
TRANS BD	750 milliamperes	-----	-----	-----
2070-1B CPU	1.0 amperes	250mA	-----	-----
2070-1C	1.0 amperes	250mA	-----	-----
2070-2A FI/O	250 milliamperes	750 milliamperes	-----	-----
2070-2B FI/O	250 milliamperes	500 milliamperes	-----	-----
2070-3A&B FPA	500 milliamperes	-----	50 milliamperes	50 milliamperes
2070-3C FPA	100 milliamperes	-----	50 milliamperes	50 milliamperes
2070-5 VME Cage	5.0 amperes	-----	200 milliamperes	200 milliamperes
2070-6 All Comm	500 milliamperes	-----	100 milliamperes	100 milliamperes
2070-7 All Comm	250 milliamperes	-----	50 milliamperes	50 milliamperes

6. EIA-485 Communications Circuitry. All circuitry associated with the EIA-485 Communications links must be capable of reliably passing a minimum of 1.0 megabits per second. Isolation circuitry must be by opto- or capacitive-coupled isolation technologies.

7. EIA-485 Line Drivers/Receivers. Through hole EIA-485 Line Drivers/Receivers, when used, must be socket mounted. Surface mounted drivers/receiver must be acceptable. EIA-485 Line Drivers/Receivers must not draw more than 35 milliamperes in active state and 20 milliamperes in inactive state per channel. A

100-Ohm Termination Resistor must be provided across each Differential Line Receiver Input. The Motherboard's control signals (e.g., SP1-RTS) must be active, or asserted, when the positive terminal (e.g., SP1-RTS+) is a lower voltage than its corresponding negative terminal (e.g., SP1-RTS-). A control signal is inactive when its positive terminal voltage is higher than its negative terminal. Receive and transmit data signals must be read as a "1" when the positive terminal's (e.g., SP1-TXD+) voltage is higher than its corresponding negative terminal (e.g., SP1-TXD-). A data value is "0" when its positive terminal's (e.g., SP1-TXD+) voltage is lower than its negative terminal (e.g., SP1-TXD-).

8. Sockets. Sockets for devices (called out to be socket mounted) must be "xx" pin AUGAT 500/800 series AG10DPC or equal.

9. SDLC. SP5and SP3 SDLC frame address assignments (Command/Response) are as follows:

		SP5	*SP3*
CPU 2070-1	=	"19"	"19"
FI/O 2070-2A & 8	=	"20"	"Not Applicable"
CPU Broadcast to all	=	"255"	"255"

All other addresses are reserved by this standard. The SDLC response frame address must be the same address as the Command frame it receives.

B. Type 2070-1 CPU Module.

1. Type 2070-1A Configuration. The TYPE 2070-1A CPU consists of the Main Controller Board, Transition Board, Board Interface Harness, and CPU Module Software.

2. Type 2070-1B Configuration. The TYPE 2070-1B CPU must be a single board module meeting the 2X WIDE board requirements. The module must be furnished normally resident in MOTHERBOARD Slot A5. The module must meet all the requirements listed under this section and Details except for the following:

   a. The VME software and hardware bus requirement does not apply nor do the MCB and Board Interface Harness physical requirements.

   b. A Dual SCC Device (asynch/synch) and associated circuitry must be furnished to provide two additional system serial ports. The Dual SCC1 must be assigned to the System Serial Port SP1 meeting all requirements called out for SP1. The Dual SCC2 must be assigned as System Serial Port SP8. The SP8 and associated circuitry must interface with the MC68360 address and data structure and serially be connected to the external world via the DB 25 Pin C13S Connector located on the module front panel. The SP8 must meet all SP2

Port requirements including EIA 485 Drivers / receivers and synchronous data rate of 614.4 kilobits per second.

c. The 68360 SCC1 must be reassigned to ETHERNET (ENET) Network meeting ETHERNET 10 MBPS IEEE 802.3 (TP) 10 BASE T Standard Requirements, both hardware and software. The four network lines must be used to route ETHERNET across the MOTHERBOARD to the "A" Connectors. DC Grounding plane around the network connectors and lines to be provided. Network Lines must be assigned as: Network 1 = ENET TX+, Network 2 = ENET TX-, Network 3= ENET RX+, and Network 4 = ENET RX-. In addition, the conditioned ETHERNET must be brought out on RJ 45 C14S Connector mounted on the CPU-1B Front Panel. Four LEDs labeled "TX, RX, TX Collision and TX Status" must be mounted on the front panel signifying ETHERNET operational conditions.

d. The 2070-1B CPU must not draw more than 1.00 Amperes of +5VDC and 250 milliamperes of ISO+12 VDC.

3. Type 2070 – 1C Configuration. The TYPE 2070-1C CPU must be a single board module meeting the 2X WIDE board requirements. The module must be furnished normally resident in MOTHERBOARD Slot A5. The module must meet all the requirements listed under the 2070-1B section of this standard, with the following additions:

   a. Engine Board. The TYPE 2070-1C CPU must use an Engine Board compliant to the AASHTO/ITE Next Generation ATC Standard. The Engine Board must be used for execution of the application software. No other microprocessor or memory of the 2070-1C CPU to be used for execution of the application software.

   b. Ethernet Ports. The second ETHERNET port of the Engine Board must be brought out on an RJ 45 C15S Connector mounted on the 2070-1C front panel. The front panel LED indicators for the two Ethernet ports must conform to the AASHTO/ITE Next Generation ATC Standard.

   c. Universal Serial Bus (USB). The TYPE 2070-1C CPU must include a USB port compliant to the AASHTO/ITE Next Generation ATC Standard, and brought out from the Engine Board to a USB C16S Connector mounted on the 2070-1C front panel.

   d. Host Module Identification. The TYPE 2070-1C CPU must implement the host module identification using the Engine Board SPI serial port, compliant to the AASHTO/ITE Next Generation ATC Standard.

4. Main Controller Board (MCB).

a. General. The MCB must be a 3U VME bus compliant board and contain a system controller, an A24-D16 interface, a Master & Slave bus interface, a Multilevel VMEbus Arbiter, a FAIR VMEbus Requester, a system clock driver, and BTO (64).

b. Controller. The CONTROLLER Device must be a Motorola MC68360 or equal, clocked at 24.576 MHz minimum. The Fast IRQ Service System is reserved for CITY OF HOUSTON use only. The Interrupts must be configured as follows:

Level 7 -	VMEbus IRQ7	
Level 6 -	VMEbus IRQ6	ACFAIL
Level 5 -	VMEbus IRQ5	CPU Module Counters / Timers, LINESYNC (auto vectored), Serial Interface Interrupts
Level 4 -	VMEbus IRQ4	
Level 3 -	VMEbus IRQ3	
Level 2 -	VMEbus IRQ2	
Level 1 -	VMEbus IRQ1	

c. Memory Address Organization.

8000 0000 - 80FF FFFF	STANDARD
9000 0000 - 9000 FFFF	SHORT

(1) 16 megabytes of contiguous address space for each specified memory (DRAM, SRAM and FLASH) allocated on an even boundary. The SRAM and FLASH memories must be accessed through the OS-9 Operating System's File Manager, or approved equivalent. The address of each memory block must be specified by the manufacturer and provided with the documentation.

(2) When the incoming +5 VDC falls below its operating level, the SRAM must drop to its standby state; and the SRAM and TOD Clock shift to the +5 VDC Standby Power. An on-board circuit will sense the +5 VDC Standby Power and shift to an On-board CPU Power Source. When the incoming +5 VDC rises to within its operating level, the appropriate MCB Circuitry will shift from standby power to incoming +5 VDC.

d. RAM Memory. Provide a minimum of 8 megabytes of DRAM Memory, organized in 32-bit words. A minimum of 1 megabyte of SRAM is required, of which 512 KiloBytes minimum must be available for City of Houston use as a RAM drive (R0). The time from the presentation of valid RAM address,

select lines, and data lines to the RAM device to the acceptance of data by the RAM device must not exceed 80 nanoseconds and be less as required to fulfill zero wait state RAM device write access under all operational conditions.

e. FLASH Memory. Provide a minimum of 8 MB of FLASH memory, organized in 16- or 32- bit words. The MCB must be equipped with all necessary circuitry for writing to the FLASH memory under program control. No more than 2 MB of FLASH Memory to be used for the Boot Image (List) and a minimum of 6 MB be available for CITY OF HOUSTON use. The 2 MB of FLASH Memory must be reserved for the Boot Image only. Flash memory must have a minimum rated capacity of 100,000 read/write cycles and be industrial grade or better.

f. Time-of-Day Clock. Provide a software settable hardware Time-of-Day (TOD) clock. It must maintain an accuracy of +/-1 minute per 30 days at 25 degrees C (77 degrees F) under on-board standby power. The clock must be aligned to a minimum fractional second resolution of 10 milliseconds and track seconds, minutes, hours, day of month, month, and year.

g. CPU Reset. Provide a software-driven CPU RESET signal (Active LOW) to reset other controller systems. The signal output must be driver capable of sinking 30 milliamperes at 30 VDC. Execution of the program module "CPURESET" in the boot image must assert the CPU RESET signal once.

h. CPU Activity Indicator. Provide an open-collector output, capable of sinking 30 milliamperes at 30 VDC, to drive the Front Panel Assembly CPU Activity LED INDICATOR.

i. Tick Timer. The OS-9 Operating System TICK Timer must be derived from each transition of LINESYNC with a tick rate of 120 ticks per second.

j. SRAM and TOD Holdup. The SRAM and TOD Clock Circuitry, under Standby mode, must draw no more than 8 microamperes at 2.5 VDC and 35 degrees C. Supply an On-board Capacitor to hold up SRAM and TOD or a minimum of 7 days.

5. Transition Board. Provide a TRANSITION Board (TB) to transfer serial communication and control signals between the MCB and the Interface Master-board. Said signal and communication lines must be driven/received off and on the module compliant to EIA- 485. The Transition Board must provide a 1 KiloOhm pull-up resistor for the A2 & A3 installed lines. If the DC Ground is not present (slot not occupied) at the CPU EIA-485 line drivers/receivers, the drivers/receivers must be disabled (inactive).

6. Shielded Interface Harness. Provide a SHIELDED INTERFACE HARNESS that includes MCB and Transition Board connectors with strain relief, lock latch, mating connectors, and harness conductors. A minimum of 25 mm of slack must

be provided. No power to be routed through the harness. The harness must be 100% covered by an aluminum mylar foil and an extruded black 0.8 mm PVC jacket or equal.

7. DataKey. Provide a DATAKEY Keyceptacle™ (KC4210, KC4210PCB or equal) mounted on the CPU module front panel (or the Transition Board of Type 1A). Power must not be applied to the receptacle if the key is not present.

   The Manufacturer must supply a 2-megabyte Memory Size Datakey (SFK2Mb or equal) with each MODEL 1A TB (Transition Board) or 1B CPU module unless specified otherwise. The Datakey must be temperature rated for –40 to +80 degrees C operation, be black in color, and be initialized to the format and default values defined below.

   When programmed, the memory on the key of header version 1 must be organized as follows:

Bytes	Description	Default Values
1-2	16 bit Frame Check Sequence (FCS) calculated as defined in clause 4.6.2 of ISO/IEC 3309. This FCS is calculated across bytes 3-64	
3	Key Type	See table below
4	Header Version	1
5-8	Latitude	0.0
9-12	Longitude	0.0
13-14	Controller ID	0xFFFF
15-16	Communication drop number	0xFFFF
17-20	IP Address	10.20.70.51
21-24	Subnet Mask	255.255.255.0
25-28	Default Gateway	10.20.70.254
29	Startup Override	0xFF
30-64	Reserved for City of Houston use	All bytes set to 0xFF
65 to End	User Data	All bytes set to 0xFF

   When programmed, Byte 3 of the header must contain the Key Type value as defined in the following table:

Key Type	Model No.	Memory Size	Sector Size
1	DK1000	1 KiloByte	1 Byte
2	LCK16000	16 KiloBytes	1 Byte

Key Type	Model No.	Memory Size	Sector Size
3	SFK2Mb	2 megabytes	64 KiloBytes
4	TBD	4 megabytes	64 KiloBytes
5	TBD	8 megabytes	64 KiloBytes

The data format in the CPU Datakey header for the Latitude and Longitude fields must comply with IEEE/ANSI 754-1985 STD. All the other fields follow a Big Endian Format as implemented by Motorola CPUs.

The Startup Override byte may be used to override the default controller startup procedure.

8. CPU Module Software. The following must be supplied:
   - Operating System
   - Drivers and Descriptors
   - Application Kernel
   - Deliverables
   - Error Handler

   a. Operating System. The CPU Module must be supplied with Radisys/Microware OS-9 Version 3.2, or later, with kernel edition #372 or later. The following modules must be included:
      - Embedded OS-9 Real Time Kernel
      - Sequential Character File Manager (SCF)
      - Stacked Protocol File Manager (SPF)
      - Pipe File Manager (PIPEMAN)
      - Random Block File Manager (RBF)
      - C Shared Library (CSL)

      Boot Image must include the following utility modules:

Break	Date	Deiniz	Devs	Free	Copy
Dir	Tmode	Edt	List	Load	Deldir
Dump	Del	Ident	Iniz	Irqs	Events
Echo	Format	Dcheck	Login	Link	Kermit
Tsmon	Mdir	Mfree	Pd	Makdir	Save
Attr	Rename	Procs	Unlink	Sleep	Xmode
Shell	Build	Setime	Merge	grep	

   b. Drivers and Descriptors.

(1) Supplied modules must be re-entrant, address independent, and not contain self-modifying code.

Device drivers which require extensions to the standard OS-9 libraries must use the _os_getstat() and _os_setstat() functions.

```
#define SS_2070 0x2070

error_code _os_getstat(path_id path, SS_2070, PB2070 *pb);

error_code _os_setstat(path_id path, SS_2070, PB2070 *pb);

typedef struct

{

    u_int32 code;

    u_int32 param1;

    union

    {

        u_int32 param;

        void    *pointer;

    } param2;

} PB2070, *pb;
```

The following subcodes for use with PB2070.code are also defined:

```
#define GS2070_Status        0x1C
#define SS2070_SSig          0x1A
#define SS2070_IFC           0x22
#define SS2070_OFC           0x23
#define SS2070_Timer_Sig         0x1000
#define SS2070_Timer_Cyc         0x1001
#define SS2070_Timer_Start       0x1002
#define SS2070_Timer_Stop    0x1003
#define SS2070_Timer_Reset   0x1004
```

Note: When PB2070.param2.pointer is used, PB2070.param1 to be loaded with the size of what PB2070.param2.pointer is referencing. When calling _os_getstat() or _os_setstat(), all reserved or unused parameters and fields in PB2070 to be loaded with 0 (zero).

(2) Drivers must be provided to access the FLASH, SRAM, and DRAM memories. The following descriptors must apply:

/f0	FLASH drive	non-volatile, writeable
/dd	FLASH drive	OS-9 default device for /f0
/f0wp	FLASH Drive	as /f0 but, write protection
/f0fmt	FLASH Drive	as /f0 except format enabled
/r0	SRAM Drive	non-volatile ramdisk
/r0fmt	SRAM Drive	as /r0 but format enabled
/r2	DRAM Drive	volatile 1 MB ramdisk, not automatically initialized

(3) A driver to handle each of the four internal timers under the OS-9 Kernel must be provided. Provide access to the MC68360 internal timers through the following device descriptors:

(a) Descriptor names for each timer:

timer1 = access to MC68360's internal timer #1
timer2 = access to MC68360's internal timer #2
timer3 = access to MC68360's internal timer #3
timer4 = access to MC68360's internal timer #4
timer12 = access to MC68360's internal timer #1 & #2 (cascaded)
timer34 = access to MC68360's internal timer #3 & #4 (cascaded)

(b) Timer Standard OS-9 Function Calls:

error_code _os_open (char *timer_desc_name, path_id *path);

error_code _os_read (path_id path, void *timer_value, u_int32 *size);

Note: Prior to calling _os_read(), size must be loaded with the value 4 and timer value must be pointed to a u_int32. _os_read() must read the current timer value and load it into timer_value as µS x 100.

error_code _os_close (path_id path);

(c) Timer Extension to Standard OS-9 Function Calls:

error_code _os_setstat(path_id path, SS_2070, PB2070 *pb);

The timer drivers must support the following modes using the SS_2070 _os_setstat() option code and a custom parameter block structure:

- Send signal after specified time interval. Sets timer to zero and schedules individual one-shot signal.

  pb→code = SS2070_Timer_Sig (0x1000); /* request for one-shot signal */

  pb.param1 = signal; /* signal code to send (0 = do not send a signal and cancel any pending signals) */"

  pb→param2.param = period; /* timer period in microseconds x 100 */

- Send recurring periodic signal. Sets timer to zero and schedules repeating periodic signal.

  pb→code = SS2070_Timer_Cyc (0x1001); /* request for periodic signal */

  pb.param1 = signal; /* signal code to send (0 = do not send a signal and cancel any pending signals) */"

  pb→param2.param = period; /* timer period in microseconds x 100 */

- Start timer. Start the timer if stopped. Timer will free run in a periodic mode, starting at the current timer value as its initial value and timer's maximum allowable time as its timer period (6.5535 seconds for timers 1-4 and 429496.7295 seconds for timers 12 and 34). Timer will not send a signal and any pending signals will be cancelled. Timer mode will be SS2070_Timer_Start. pb.code = SS2070_Timer_Start (0x1002); /* start timer if stopped */"

- Stop timer. Leaves current value in timer. Cancels any pending signals.

  pb→code = SS2070_Timer_Stop (0x1003); /* stop timer if running */

- Reset timer. Stops timer if running, resets timer value to zero, and cancels any pending signals.

  pb→code = SS2070_Timer_Reset (0x1004);/* reset timer (stop and zero) */

(d) Timer Extension to Standard OS-9 Function Calls:

error_code _os_getstat(path_id path, SS_2070, PB2070 *pb);

The timer driver will support the following function using the SS_2070 _os_getstat() option code and custom parameter block structure:

- Retrieve current timer configuration.

```
typedef struct
{
    u_int32 value;
    u_int32 mode;
    u_int32 signal;
    u_int32 period;
} Timer_status;

pb→code = GS2070_Status  (0x1C)      /* Request timer status
data */
pb→param1 = sizeof(Timer_status)
pb→param2.pointer = Timer_status*
```

Status data must be returned in the structure pointed to by pb→param2.pointer as follows:

pb→param2.pointer→value	/* current timer value in µS x 100 */
pb→param2.pointer→mode	/* SS2070_Timer_Sig if one-shot signal pending, SS2070_Timer_Cyc if periodic signal pending, SS2070_Timer_Start if free running, SS2070_Timer_Stop if not active */
pb→param2.pointer→signal	/* signal code pending if SS2070_Timer_Sig or SS2070_Timer_Cyc, 0 otherwise */
pb→param2.pointer→period	/* timer period in microseconds x 100 if SS2070_Timer_Sig or SS2070_Timer_Cyc, 0 otherwise */

(e) All timer periods are specified in units of hundreds of microseconds, i.e. a timer period of 7 = 700 microseconds. The minimum allowed timer period must be 500 microseconds. The maximum timer period for timers 1-4 must be 6.5535 seconds (0xFFFF). The maximum timer period for timer12 and timer34 must be 429496.7295 seconds (0xFFFFFFFF). The driver must return error E$Param from

_os_setstat() if the requested timer period is outside the allowable range.

(4) Access and control to the CPU Datakey must be provided through the following descriptor name and OS-9 functions:

Descriptor Name

datakey = access to the CPU Datakey

Function Calls

error_code _os_open (char *datakey_desc_name, path_id *path);

error_code _os_close (path_id path);

error_code _os_read (path_id path, void *data_buffer, u_int32 *data_size);

error_code _os_write (path_id path, void *control, u_int32 *data_size);

error_code _os_seek(path_id path,u_int32 position); sets read / write offset

error_code = _os_ss_erase(path_id path, u_int32 num_sec_erase); /*erases sector(s) if pointer is on a block boundary, returns E$PARAM error if not on a boundary */"

error_code = _os_gs_pos(path_id path,u_int32 *position); /* gets current file pointer position */

error_code = _os_gs_size(path_id path, u_int32 *size); /* gets current datakey size */"

Error Codes Returned by Function Calls

E$NotRdy if datakey is not inserted
E$Seek if Offset plus *data_size is beyond end of CPU Datakey.
E$EOF if upon read or write, the last byte of CPU Datakey has previously been processed."

Note: Use of SCF to implement the Datakey driver is not allowed.

(5) The asynchronous serial communications device drivers must support the six flow control modes (FCM#) described below:

FCM# Description

(0) No Flow Control Mode: The driver transmits data regardless of the state of CTS. Upon a write command, the driver asserts RTS, and de-asserts RTS when data transmission is completed. This is the default mode. When user programs issue the first RTS related command, the driver switches to Manual Flow Control Mode (FCM# 1).

(1) Manual Flow Control Mode: The driver transmits data regardless of the state of CTS. The user program has absolute control of the RTS state. The driver doesn't automatically assert or de-assert RTS.

(2) Auto-CTS Flow Control Mode: The driver transmits data only when CTS is externally asserted. The user program has absolute control of the RTS state. The driver doesn't automatically assert or de-assert RTS.

(3) Auto-RTS Flow Control Mode: The driver transmits data regardless of the state of CTS. Upon a write command, the driver asserts RTS, and de-asserts RTS when data transmission is completed and any configured RTS extension is elapsed. If the user program asserts RTS, then RTS remains on until the user program de-asserts RTS. If the user program de-asserts RTS before the transmission buffer is empty, the driver holds RTS on until the transmission buffer is empty and any configured RTS extension is elapsed.

(4) Fully Automatic Flow Control Mode: The driver transmits data only when CTS is externally asserted. Upon a write command, the driver asserts RTS and waits for CTS, starts data transmission when CTS is asserted, and de-asserts RTS when data transmission is completed and any configured RTS extension is elapsed. If user program asserts RTS, then RTS remains on until the user program de-asserts RTS. If the user program de-asserts RTS before the transmission buffer is empty, the driver holds RTS on until the transmission buffer is empty and any configured RTS extension is elapsed.

(5) Dynamic Flow Control Mode: The driver transmits data only when CTS is externally asserted. The driver controls RTS based on the status of its receiving buffer. The driver asserts RTS continuously as long as its receiving buffer has sufficient capacity to store incoming data. If the receiving buffer approaches full, the

driver de-asserts RTS until enough data has been read from the buffer to create sufficient receive capacity.

(a) The serial device driver must be able to set user options via _os_setstat() and return status via _os_getstat(). To support legacy application programs, the device driver must also be able to set user options via _os_ss_size() and to return status via _os_gs_size():

error_code_os_setstat(path_id path, SS_2070, void *pb);

error_code_os_getstat(path_id path, SS_2070, void *pb);

error_code_os_ss_size(path_id path, u_int32 size);

error_code_os_gs_size(path_id path, u_int32 *size);

Note: The preferred method of accessing serial device drivers is through _os_setstat() and _os_getstat(). The _os_ss_size() and _os_gs_size() interface may not be required by future versions of this specification and is therefore not recommended for new development.

The option subcodes to be passed in pb→code and the data to be contained in pb→param1 are defined as follows. pb→param2 is unused here and should be set to 0 (zero). For _os_ss_size() and _os_gs_size(), the size argument is the same format as pb→param1.

(b) The supported _os_setstat() / _os_ss_size() options must be as follows.

- Subcode passed in pb→code is SS2070_OFC (0x23). Data passed in pb→param1 is defined as follows:

Bits	Description
31-24	Auto RTS turn-off extension in number of characters (range:0-255, 0=default).
23-14	Reserved for future use.
13	Inhibit return of error E$Write from _os_write() when transmit buffer full in FCM# 2, 4, 5 (default=0, 0=error, 1=block)
12	Inhibit variable SCC MRBLR (default =0; 0=NO; 1=inhibit).
11	Inhibit SCC TODR (default=0; 0=NO; 1=inhibit).
10-8	Flow Control Mode Number (FCM#) (range:0-5).
7-0	Subcode SS2070_OFC (0x23).

Variable MRBLR (68360 SCC)

To reduce the IRQ handler overhead, the 68360 SCC driver must use variable MRBLR as follows. If SS2070_OFC bit 12 is set to 1, the

MRBLR must be fixed at 16 for all baud rates. Variable MRBLR is not required for SP1 or SP8 on the 2070-1B CPU Module.

Baud Rate	MRBLR Setting
1200	1
2400	2
4800	4
9600	8
19200 & Higher	16

TODR (68360 SCC only)

TODR requests processing a new TX buffer immediately. To reduce impact on other serial channel operations, SS2070_OFC bit 11 may be set to 1 to prevent assertion of TODR. TODR is not required for SP1 or SP8 on the 2070-1B CPU Module.

- Subcode passed in pb→code is SS2070_IFC (0x22).
  Data passed in pb→param1 is defined as follows:

Bits	Description
31-11	Reserved for Future Use.
10	DCD must be asserted to receive data (default=0; 0=NO; 1=YES).
9-8	Reserved for Future Use.
7-0	Subcode = SS2070_IFC (0x22).

- Subcode passed in pb→code is SS2070_SSig (0x1A).
  1. If CTS is currently negated and bits 16 – 31 are not all 0:
     Setting the SS2070_SSig parameter block bit 11 (send when CTS is asserted) will cause the controller to send a one-shot signal as soon as CTS is asserted.
     Setting the SS2070_SSig parameter block bit 12 (send when CTS is negated) will cause the controller to send a one-shot signal immediately.
  2. If CTS is currently asserted and bits 16 – 31 are not all 0:
     Setting the SS2070_SSig parameter block bit 11 (send when CTS is asserted) will cause the controller to send a one-shot signal immediately.

Setting the SS2070_SSig parameter block bit 12 (send when CTS is negated) will cause the controller to send a signal one-shot as soon as CTS is negated.

3. If both bits 11 and 12 of the SS2070_SSig parameter block are set, and bits 16 – 31 are not all 0:

   The controller will send a one-shot signal upon the next change of CTS state.

Data passed in pb→param1 is defined as follows:

Bits	*Description*
31-16	A signal number to be sent to calling process when the state of an input changes.
15-13	Reserved for Future Use.
12	Send signal when CTS is de-asserted.
11	Send signal when CTS is asserted.
10-8	Reserved for Future Use.
7-0	Subcode = SS2070_SSig (0x1A).

(c) The supported _os_getstat()_ / _os_gs_size() options must be as follows.

- Subcode passed in pb→code is GS2070_Status (0x1C).
  Data returned in pb→param1 is defined as follows:

its	Description
1-16	Current unfilled transmit buffer character count of the serial device driver.
5-11	Reserved for Future Use.
0-8	Current Flow Control Mode Number (FCM#).
	Reserved for Future Use.
	Overrun error –0=no error; 1=error has occur since last GS2070_Status call.
	Frame error –0=no error; 1=error has occur since last GS2070_Status call.
	Parity error –0=no error; 1=error has occur since last GS2070_Status call.
-2	Reserved for Future Use.
	DCD state –0=de-asserted; 1=asserted.
	CTS state –0=de-asserted; 1=asserted.

(6) Device drivers compliant with the OS-9 SCFMAN must be provided for CPU Activity LED Indicator and Day Light Savings time correction features. The descriptor names must be as follows:

led = access to CPU Activity LED Indicator

dstclock = access to Daylight Savings Time Clock correction
The standard OS-9 SCFMAN library calls and their functions are as follows:

error_code _os_open (char *desc_name, path_id *path); //open descriptor for command

error_code _os_close (path_id path); //close descriptor

error_code _os_write (path_id path, void *value, u_int32 *data_size); //set value of function

*value = 1, turn on LED or enable DST correction (default)
*value = 0, turn off LED or disable DST correction
set u_int32*data_size to 1

error_code _os_read (path_id path, void *value, u_int32 *data_size); //get current state

set u_int32*data_size to 1

(7) The Manufacturer must provide the following features to support the TOD operation and synchronization.

(a) Leap Year and Daylight Savings Time (DST) Adjustments - The OS-9 System clock / calendar must automatically be adjusted to account for DST and leap years.

(b) Setting Hardware Clock from OS-9 System Clock – Provide a device driver compatible with the OS-9 SCFMAN to allow the hardware TOD clock/calendar to be updated from the OS-9 system clock under application control. The descriptor name must be "ClockUpdate." Opening the descriptor will cause the driver to synchronize the clock to a minimum of 10 milliseconds resolution. The driver must compensate for any time elapsed during the process of updating the hardware clock.

(c) Setting OS-9 System Clock from Hardware Clock - At system power up, the OS-9 system TOD clock/calendar must automatically be

updated from the hardware TOD clock. The clocks must be synchronized to a minimum of 10 milliseconds resolution.

(8) The FLASH drive must be protected from corruption. It must be protected using the Write Protect (WP) bit of the Base Register. This bit must be set except when explicitly writing to flash. When writing to the FLASH drive the current sector of FLASH being written must first be backed up in SRAM. The backup sector copy must be invalidated when FLASH write operation is completed. In case of power failure, the FLASH driver must detect the presence of the valid backup sector copy in SRAM and read sector data from the valid backup sector copy. A user write operation must restore the valid backup sector copy first. Execution of the program module, "FLRESTORE," in the Boot Image must also restore the valid backup sector copy to FLASH drive after a specified delay. "FLRESTORE" must accept a delay parameter in seconds ranging from 0 to 600 seconds. The default delay factor is 30 seconds. No more that 150 KB of SRAM to be dedicated to this purpose.

Warning: Power loss <u>or other interruption</u> while writing to the FLASH drive may cause FLASH drive file and/or disk corruption. It is therefore strongly recommended that the FLASH drive be used to hold controller applications only.

(9) MODEL 2070-1A and 2070-1B CPU modules shall include the following set of standard OS-9 networking modules in the operating system boot image, sufficient to support network configuration, startup, and ftp and telnet servers:

spip, ip0, sptcp, tcp0 spudp, udp0, spraw, raw0, spenet, enet, netdb (dns version), ipstart, ifconfig, route, ndbmod, ftpd, ftpdc, telnetd, telnetdc, pkman, pkdrvr, pk, pks, ping, dhcp.

The boot image shall include a default inetdb module with a module revision of zero. It shall contain the following entries only.

<u>Hosts</u>

localhost	127.0.0.1	me

<u>Protocols</u>

ip	0	IP
icmp	1	ICMP
igmp	2	IGMP
tcp	6	TCP
udp	17	UDP

<u>Services</u>

ndp	13312/tcp	ndpd

npp	13568/tcp	nppd
echo	7/tcp	
echo	7/udp	
ftp-data	20/tcp	
ftp-data	20/udp	
ftp	21/tcp	
ftp	21/udp	
telnet	23/tcp	
telnet	23/udp	
nameserver	42/tcp	
nameserver	42/udp	
tftp	69/tcp	
tftp	69/udp	

The boot image shall include a default inetdb2 module with a module revision of zero. It shall contain the following entry only:

Interfaces

enet0 binding /spqe0/enet (no address, netmask, or broadcast)

On the MODEL 2070-1B CPU module, an OS-9 SPF Ethernet hardware driver and descriptor for the 68360 (SCC1) must be provided in the operating system Boot Image. The descriptor must be named spqe0.

The following OS-9 modules to be included in the /f0/CMDS/BOOTOBJS flash disk directory to allow for standard TCP/IP network communications using Ethernet Protocol over Ethernet hardware and/or Serial Line Internet Protocol (SLIP) or Point-to-Point Protocol over serial links:

(a) Drivers and Descriptors for PPP.

(b) Drivers and Descriptors for SLIP.

(c) LAN Comm Pak modules: spenet, enet, spip, ip0, sptcp, tcp0, spudp, udp0, spraw, raw0, sproute, route0, spipcp, ipcp0, splcp, lcp0, sphdlc, hdlc0, spslip, sps10

(d) Network modules: pkman, pkdvr, pk, pks

(e) Network Trap Handler: netdb_local, netdb_dns

(f) NFS Modules: nfs, nfsnul and nfs_devices.

The following Network utilities must be included and must reside in the /f0/CMDS directory as identified in this specification:

arp, dhcp,ftp, ftpd, ftpdc, idbdump, idbgen, rpcdbgen, ifconfig, inetd, ipstart, ndbmod, netstat, ping, route, routed, telnet, telnetdc,

hostname, nfsc, mount, rpcdump, nfsstat, exportfs, portmap, pppd, chat, pppauth, nfsd, mountd, and showmount.

Multi-user functionality:

The boot image init module must be configured with a "default directory name" as /f0wp. This will allow login and tsmon to provide the user with login prompt from the terminal port or from the network via a telnet session.
The following OS-9 modules to be included in the operating system boot image for the implementation of multi-user mode.

login, tsmon

Network Configuration at boot up:
The modules inetdb, inetdb2 and rpcdb must be generated by the make utility via the use of a makefile and the network configuration files residing the /f0/ETC directory. The generated inetdb, inetdb2 and rpcdb modules to be re-located to the /f0/CMDS/BOOTOBJS directory where they will be pick-up by the network configuration shell scripts located at /f0/SYS. Configure the modules with the network default values as defined in Section 10.B.6. (Data Key) via the interfaces.conf shell script. Provide a Utility Program named netcfg that reads the CPU Datakey for an IP Address, Subnet Mask and Default Gateway. If the Datakey is present and valid, netcfg will set the IP Address, Subnet Mask and Default Gateway of the Model 2070 Controller when executed by a user at the command line. The netcfg utility will create a new inetdb, inetdb2 and rpcdb database module based on the Datakey network parameters. The new inetdb, inetdb2 and rpcdb modules should be re-located to the /f0/CMDS/BOOTOBJS directory where they will be pick-up by the network configuration shell scripts located at /f0/SYS. The netcfg must also allow the user to read, write and display network parameters to and from the Datakey via the command line prompt.
If the Datakey is not present or invalid, netcfg must display an error and exit without altering the network configuration. The netcfg utility must reside in /f0/CMDS.

Standard Microware File System Configuration:
A user name "super" with password as "user" must be defined in the password file.

The PPP and SLIP descriptors must have baud rates and ports set as follows and be stored in the /f0/CMDS/BOOTOBJS directory,

hdlc0 and spsl0 configured to use /sp1 and 38400 bps
hdlc1 and spsl1 configured to use /sp2 and 115200 bps

hdlc2 and spsl2 configured to use /sp3 and 115200 bps
hdlc3 and spsl3 configured to use /sp4 and 38400 bps

Provide a set of example configuration files consistent with the above networking modules in the /f0/ETC directory. This directory must contain the following text files.

hosts, hosts.equiv, networks, protocols, services, inetd.conf, resolv.conf, hosts.conf, rpc, interfaces.conf, routes.conf.

(10) Standard Microware File System Configuration.

(a) The 2070 must follow Standard Microware File System Configuration. A /f0/CMDS, /f0/CMDS/BOOTOBJS, /f0/ETC and /f0/SYS directories implemented. Execute permission must be included in the attributes of files in the /f0/CMDS directory. Sysgo will set its execution directory to /f0wp/CMDS prior to spawning opexec or other processes. The /f0/CMDS/BOOTOBJS must contain the modules as identified above and other customizable descriptors and modules. The /f0/SYS must also contain the following four standard OS-9 network configuration shell script files: startspf, startnfs, loadspf and loadnfs.

(b) The /f0/SYS must contain a "password" file. The password file will follow Microware's password file format for the addition and configuration of multiuser functionality and password protection. A user name "super" with password as "user" must be defined in the password file.

(c) The utilities tar, make, vi, fixmod and mshell must be included in the /f0/CMDS directory.

c. Application Kernel.

(1) The provided software must boot OS-9 from SYSRESET. The entire program must be resident in FLASH Memory. Configure the serial port descriptors with the following defaults:

SP1 & 2	1.2 Kbps, 8-bit word, 1 stop, no parity, no pause, no echo
SP 3S	614.4 Kbps
SP4	9.6 Kbps, 8-bit word, 1 stop, no parity, no pause, x on and x off BOTH OFF
SP 5S	614.4 Kbps
SP 6	38.4 Kbps, 8-bit word, 1 stop and no parity

(2) Hardware initialization, preliminary self-test, OS-9 initialization (except Extended Memory Test), and forking OPEXEC must be completed in less than 4 seconds. This startup time will be measured from the release of SYSRESET to the turn on of the CPU LED using a user level program named ONLED. The ONLED program must be the last module loaded into RAM and executed using opexec or a startup file.

(3) Initialization. Configure the boot image init module with the default directory name as /f0wp and sysgo as the first executable module.

Sysgo must operate as follows:

(a) Sysgo must set the execution directory to /f0wp/CMDS

(b) Sysgo must check if the backspace key (0x08) is being received on /sp4 (c50s). If received, Sysgo must:

- Fork a shell on /sp4 using the current directory.
- Remain an active process and monitor the shell for termination. If the shell does terminate, Sysgo must fork another shell on /sp4. Unless Sysgo dies, a shell will always be provided on /sp4.

(c) If the backspace key was not received, Sysgo must check for the presence of a Datakey. If present and valid, Sysgo will check the Startup Override byte in the Datakey header.

If Startup Override is 0x01, Sysgo must:

- Fork a shell that executes a shell script stored on the Datakey in the following format. Immediately following the key header must be a 2-byte value indicating the length of the script. The script must immediately follow the length value, and be stored as ASCII text.
- If there is any error reading or starting the script or if the shell terminates with an error, Sysgo must display an error message on /sp4 and fork another shell as described in step b. If there are no errors executing the script, Sysgo must exit without forking another shell.

If Startup Override is 0x02, Sysgo must:

- Fork an executable module stored on the Datakey immediately following the header.
- If there is any error loading or forking the module, Sysgo must display an error message on /sp4 and fork a shell as described in step b. If there are no errors forking the module, Sysgo must then exit without forking a shell.

(d) If the backspace key was not received and Startup Override was not performed:

- Sysgo must fork the module named /f0wp/OPEXEC if present at /f0wp.
- If there is any error loading or forking OPEXEC, Sysgo must display an error message on /sp4 and fork a shell as described in step b. If there are no errors forking OPEXEC, Sysgo must then exit without forking a shell.

(e) If the backspace key was not received, Startup Override was not performed, and there is no OPEXEC file:

- Sysgo must fork a shell that executes a shell script named /f0wp/startup if present at /f0wp.
- If there is any error reading or starting the script or if the shell terminates with an error, Sysgo must display an error message on /sp4 and fork another shell as described in step b. If there are no errors executing the script, Sysgo must exit without forking another shell.

(f) If the backspace key was not received, Startup Override was not performed, and there is no OPEXEC and no startup file:

- Sysgo must fork a shell as described in step b.

(4) A Short Out is defined as the period of time between ACFAIL/POWER DOWN transition to LOW and back to HIGH without a SYSRESET transition to LOW. ACFAIL/POWER DOWN transitions must generate an interrupt. The interrupt updates an OS-9 event named "ACFAIL". The "ACFAIL" event sets a value 1 indicating an ACFAIL condition occurred for the DOWN transition and set 0 indicating non-ACFAIL condition for the HIGH transition. The IRQ7 and auto-vector 31(7) must not be used to update the "ACFAIL" event.

In addition, the ACFAIL condition must generate the OS-9 auto-vector 30(6) interrupt service. Each interrupt service installed must exit with the "Carry Bit" set allow OS9 to propagate the ACFAIL interrupt. The Manufacturer must supply an interrupt handler at priority 255 that acknowledges and clears the interrupt.

Reserve Priority 1 for the OS-9 system.

(5) A Long Out is defined as ACFAIL transition to LOW follow by a SYSRESET going LOW. The SYSRESET going HIGH must be followed by an operating system reboot.

d. Error Handler.

(1) A Manufacturer may include an error handling routine to save troubleshooting data regarding initialization, power-up test abnormalities and other error conditions. If used, the error report must be stored in the file /r0/ErrorReport and not exceed 11 kilobytes in size.

e. Diagnostic Acceptance Test (DAT).

(1) A DAT Program must be provided resident in the 2070 Unit as the application program.

f. Re-Flash Utility. Provide a Utility Program that would allow the user to upgrade (re-flash) the Boot Image. This utility must provide the capabilities for upgrading the Operating System and drivers when available by the manufacturer. The Utility Program must provide the capability for the user to dynamically upgrade the Boot Image via the command prompt. The Manufacturer must also provide a copy in CD Memory of all files originally stored in the flash drive /f0 so that they can be reloaded as needed.

g. Deliverables.

(1) The following items will be provided to the CITY OF HOUSTON on a CD disk readable by a PC compatible computer.

(a) Specific hardware memory addresses, including FLASH, SRAM, and DRAM starting addresses, must be specified and provided. Written documentation of addresses must be in PDF form and will have the file name of "Memory Map.pdf"

(b) Copy of all provided written manuals in PDF form.

(c) Copies of the vendor kernel, platform drivers and OS-9 utility executable modules

(d) RE-FLASH Utility and the procedures for its use in PDF form. The PDF documentation of the procedures must have the file name of "Reflash Utility Procedures.pdf".

(2) Fully commented source code of Contractor developed drivers and utilities must be provided.

(3) OS-9 compliant header files must be provided with all driver modules.

C. Type 2070-2 Field I/O Module (FI/O).

1. Type 2070-2A Module. The TYPE 2070-2A MODULE consists of the Field Controller Unit; Parallel Input/Output Ports; other Module Circuit Functions (includes muzzle switch); Serial Communication Circuitry; Module Connectors

C1S, C11S, and C12S mounted on the module front plate; VDC Power Supply (+12VDC to +5VDC); and required resident software.

2. Type 2070-2B Module. The TYPE 2070-2B MODULE consists of the Serial Communication Circuitry, VDC Power Supply, and Module Connector C12S mounted on the module front plate only.

3. Field Controller Unit (FCU). The FCU includes a programmable microprocessor/controller unit together with all required clocking and support circuitry. Provide operational software necessary to meet housekeeping and functional requirements resident in socketed firmware.

4. Parallel I/O Ports.

   a. The I/O Ports must provide 64 bits of input using ground-true logic. Each input must be read logic "1" when the input voltage at its field connector input is less than 3.5 VDC, and be read logic "0" when either the input current is less than 100 microamperes or the input voltage exceeds 8.5 VDC. Each input must have an internal pull-up to the Isolated +12 VDC and not deliver greater than 20 milliamperes to a short circuit to ground.

   b. The I/O Ports must provide 64 bits of output.

      (1) Inputs must have the following characteristics:

         (a) A voltage between 0 and 4 volts will be considered the Low (True/Operate) state.

         (b) A voltage greater than 8 volts will be considered the High (False) state.

         (c) The transition from the **Low** state to **High** state (and vice versa) occurs between 4 and 8 volts.

      (2) Outputs must have the following characteristics:

         (a) The Low (True/Operate) voltage will be between 0 and 3 volts.

         (b) Current sinking capability in the Low state will be at least 100 milliamperes.

         (c) With an external impedance of 100 kiloOhms or greater, the transition from 4 to 16 volts (and vice versa) and be accomplished within 0.1 millisecond.

         (d) The High state impedance must exceed 1 Megohms to 12 volts DC.

   c. Each output must latch the data written and remain stable until either new data is written or the active-low reset signal. Upon an active-low reset signal, each

output must latch a logic "0" and retain that state until a new writing. The state of all output circuits at the time of Power Up or in Power Down state must be open (logic 0). It must be possible to simultaneously assert all outputs within 100 microseconds of each other. An output circuit state not changed during a new writing will not glitch when other output circuits are updated.

5. Other Module Circuit Functions.

   a. A maximum capacitive load of 100 picofarads must be presented to the LINESYNC input signal. The EIA-485 compliant differential LINESYNC signals must be derived from the LINESYNC signal.

   b. Provide an External WDT "Muzzle" Jumper on the board. With the jumper in and NRESET transitions HIGH (FCU active), the FCU must output a state change on Output Port 5, bit 8 (Connector C1, pin 103 – Monitor Watchdog Timer Input) every 100 milliseconds for 10 seconds or due to CPU Command. When the jumper is missing (open), the feature will not apply. This feature is required to operate with the Type 210 Monitor Unit only.

   c. Provide a WATCHDOG Circuit. The FIELD I/O software at Power Up with a value of 100 milliseconds must enable it. Its enabled state must be machine readable and reported in the FI/O status byte. Once enabled, the watchdog timer must not be disabled without resetting the FI/O. Failure of the FI/O to reset the watchdog timer within the prescribed timeout will result in a hardware reset.

   d. One KHz Reference. Provide a synchronizable 1 kilohertz time reference. It must maintain a frequency accuracy of +/-0.01% (+/-0.1 counts per second).

   e. Provide a 32-bit MILLISECOND COUNTER (MC) for "timestamping." Each 1 KHz reference interrupt must increment the MC.

   f. Provide a LOGIC Switch resident on the module board. The switch must function to disconnect Serial Port 3 (SP3) from the external world, Connector C12S. Its purpose is to prevent multiple use of SP3. Provide an LED on the module front panel labeled "SP3 ON". If LED light ON, SP3 is active and available at C12S.

6. Serial Communications/Logic Circuitry.

   a. System Serial Port 5 (SP5) EIA-485 signal lines must enter the I/O Module and be split into two multi-drop isolated ports. Route one to the FCU and the other converted to EIA-485, then routed to Connector C12S.

   b. System Serial Port 3 (SP3) EIA-485 signal lines must enter the I/O module and be isolated, converted back to EIA-485 and then routed to connector C12S.

c. LINE SYNC and POWER DOWN lines must be split and isolated, one routed to the FCU for shut down functions and the other changed to EIA-485; then routed to connector C12S for external module use.

d. CPU RESET and POWER UP (SYSRESET) lines must be isolated and "OR'd" to form NRESET. NRESET must be used to reset FCU and other module devices. NRESET must also be converted to EIA-485 then routed to connector C12S.

e. If the Type 2070 module is a –2B, routing to FCU does not apply.

f. Isolation is between internal +5 VDC / Ground #1 and +12 VDC ISO / VDC Ground #2. +12 VDC ISO is for board power and external logic.

7. Buffers. Provide a Transition Buffer capable of holding a minimum of 1024 recorded entries. The Transition Buffer must default to empty. There must be two entry types: Transition and Rollover. The inputs must be monitored for state transition. At each transition (If the input has been configured to report transition), a transition entry must be added to the Transition Buffer. The MC must be monitored for rollover. At each rollover transition ($xxxx FFFF - $xxxx 0000), a rollover entry must be added to the Transition Buffer. For rollover entries, all bits of byte 1 are set to indicate that this is a rollover entry. Transition Buffer blocks are sent to the CPU module upon command. Upon confirmation of their reception, the blocks must be removed from the Transition Buffer. The entry types are depicted as follows:

Input Transition Entry

Description	msb							lsb	Byte Number
Transition Entry Identifier	S	Input Number							1
MC Timestamp NLSB	x	x	x	x	x	x	x	x	2
MC Timestamp LSB	x	x	x	x	x	x	x	x	3

Millisecond Counter Rollover Entry

Description	msb							lsb	Byte Number
Rollover Entry Identifier	1	1	1	1	1	1	1	1	1
MC Timestamp MSB	x	x	x	x	x	x	x	x	2
MC Timestamp NMSB	x	x	x	x	x	x	x	x	3

8. I/O Functions. Each parallel Input/Output function contains all of the functions listed below of both the Input Function and Output Function.

a. Inputs. Input scanning must begin at I0 (bit 0) and proceed to the highest numbered input, ascending from LSB to MSB. Each complete input scan must finish within 100 microseconds. Once sampled, the logic state of an input must be held until the next input scan. Each input must be sampled 1,000 times per second. The time interval between samples must be 1 millisecond

(+/-100 microseconds). If configured to report, each input that has transitioned since its last sampling must be identified by input number, transition state, and timestamp (at the time the input scan began) and be added as an entry to the Transition Buffer. If multiple inputs change state during one input sample, these transitions must be entered into the Input Transition Buffer by increasing input number. The Millisecond Counter must be sampled within 10 microseconds of the completion of the input scan.

b. Data Filtering. If configured, the inputs must be filtered by the FCU to remove signal bounce. The filtered input signals must then be monitored for changes as noted. The filtering parameters for each input must consist of Ignore Input Flag and the ON and OFF filter samples. If the Ignore Input flag is set, no input transitions will be recorded. The ON and OFF filter samples must determine the number of consecutive samples an input must be ON and OFF, respectively, before a change of state is recognized. If the change of state is shorter than the specified value, the change of state must be ignored. The ON and OFF filter values must be in the range of 0 to 255. A filter value of 0, for either or both values, must result in no filtering for this input. The default values for input signals after reset must be as follows:

Input Signals	Default Value
Filtering	Enabled
On and off filter values must be set to	5
Transition monitoring	Disabled (Timestamps are not logged)

c. Outputs. Simultaneous assertion of all outputs must occur within 100 microseconds. Each output must be capable of being individually configured in state to ON, OFF, or a state synchronized with either phase of LINESYNC. The condition of the outputs must only be "ON" if the FI/O continues to receive active communications from the CPU Module. If there is no valid communications with the CPU Module for 2.0 seconds, all outputs must revert to the OFF condition, and the FI/O status byte must be updated to reflect the loss of communication from the CPU Module. The data and control bits in the CPU Module-FI/O frame protocol must control each output as follows:

Output Bit Translation

Case	Output Data Bit	Output Control Bit	Function
A	0	0	Output in the OFF state
B	1	1	Output is a square wave, synchronized to the LINESYNC signal. When LINESYNC is ON (1), the output is OFF, and when LINESYNC is OFF (0), the output is ON.

Case	Output Data Bit	Output Control Bit	Function
C	0	1	Output is a square wave, synchronized to the LINESYNC signal. When LINESYNC is ON (1), the output is ON, and when LINESYNC is OFF (0), the output is OFF
D	1	0	Output is in the ON state.

In Case A above, the corresponding output must be turned OFF if previously ON and if previously OFF remain OFF until otherwise configured. For half-cycle switching (cases B and C), all outputs to be changed must be changed within 50 microseconds after the corresponding LINESYNC transition and must remain in the same state during the entire half cycle. In Case D above, the corresponding output must be turned ON if previously OFF and if previously ON remain ON until otherwise configured. All outputs never change state unless configured to do so.

d. Interrupts. All interrupts must be capable of asynchronous operation with respect to all processing and all other interrupts. MILLISECOND Interrupt must be activated by the 1 kilohertz reference once per milliseconds. An MC timestamp rollover flag set by MC rollover must be cleared only on command. LINESYNC Interrupt - This interrupt must be generated by both the 0-1 and 1-0 transitions of the LINESYNC signal. The LINESYNC interrupt must monitor the MC interrupt and set the MC error flag if there has not been an interrupt from the 1 kilohertz source for 0.5 seconds (>/=60 consecutive LINESYNC interrupts). The LINESYNC interrupt must synchronize the 1 kilohertz time reference with the 0-1 transition of the LINESYNC signal once a second. A LINESYNC error flag must be set if the LINESYNC interrupt has not successfully executed for 0.5 seconds or longer (>/=500 consecutive millisecond interrupts).

e. Communication Service Routine. A low-level communication service routine must be provided to handle reception, transmission, and EIA-485 communication faults. The communication server must automatically:

For Transmission

Generate the opening and closing flags
Generate the CRC value
Generate the abort sequence (minimum of 8 consecutive '1' bits) when commanded by the FCU
Provide zero bit insertion

For Receiving

Detect the opening and closing flags
Provide address comparison, generating an interrupt for messages addressed to the I/O Module, and ignoring messages not addressed to the I/O Module
Strip out inserted zeros
Calculate the CRC value, compare it to the received value, and generate an interrupt on an error
Generate an interrupt if an abort sequence is received

f. Communication Processing. The task must be to process the command messages received from the CPU Module, prepare, and start response transmission. The response message transmission must begin within 4 milliseconds of the receipt of the received message. The time from the receipt of message to the completion of the commanded task must not exceed 70 milliseconds.

g. Input Processing. This task must process the raw input data scanned in by the 1 ms interrupt routine, perform all filtering, and maintain the transition queue entries.

9. Data Communications Protocols.

a. Protocols - All communication with the CPU Module must be SDLC-compatible command-response protocol, support 0 bit stuffing, and operate at a data rate of 614.4 kilobits per second. The CPU Module must always initiate the communication and should the command frame be incomplete or in error, no FI/O response will be transmitted. The amount of bytes of a command or response is dependent upon the I/O Module identification.

(1) The frame type must be determined by the value of the first byte of the message. The command frames type values 112-127 and associated response frame type values 240-255 are allocated to the manufacturer diagnostics. All other frame types not called out are reserved. The command-response Frame Type values and message times must be as follows:

Frame Types

Module Command	I/0 Module Response	Description	Minimum Message Time	Maximum Message Time
0-43	128-171	Reserved for NEMA TS-2		
49	177	Request Module Status	250 microseconds	275 microseconds
50	178	MILLISECOND CTR. Mgmt.	222.5 microseconds	237.5 microseconds
51	179	Configure Inputs	344.5 microseconds	6.8750 milliseconds
52	180	Poll Raw Input Data	317.5 microseconds	320 microseconds

Module Command	I/0 Module Response	Description	Minimum Message Time	Maximum Message Time
53	181	Poll Filtered Input Data	317.5 microseconds	320 microseconds
54	182	Poll Input Transition Buffer	300 microseconds	10.25 microseconds
55	183	Command Outputs	405 microseconds	410 microseconds
56	184	Reserved	340 microseconds	10.25 milliseconds
57	185	Reserved	340 microseconds	6.875 milliseconds
58	186	Configure Watchdog	222.5 microseconds	222.5 microseconds
59	187	Controller Identification	222.5 microseconds	222.5 microseconds
60	188	I/O Module Identification	222.5 microseconds	222.5 microseconds
61-62	189-190	Reserved (note below)	---	---
63	191	Poll variable length raw input	317.5 microseconds	320 microseconds
64	192	Variable length command outputs	405 microseconds	410 microseconds
65	193	Reserved (note below)	---	---
67	195	Reserved (note below)	---	---

(2) Messages 61 / 189, 62 / 190, 65 / 193, and 67 / 195 are reserved for ITS Cabinet Frame Types. Message 63 / Message 191 must be the same as Message 52 / 180 except Byte 2 of Message 180 response must denote the following number of input data bytes. Message 64 / 192 must be the same as Message 55 / 183 except Byte 2 of the Message 55 Command must denote the number of output data bytes, plus the following output control bytes.

b. Request Module Status. The Command must be used to request FI/O status information response. Command/response frames are as follows:

Request Module Status Command

Description	msb							lsb	Byte Number
(Type Number = 49)	0	0	1	1	0	0	0	1	Byte 1
Reset Status Bits	P	E	K	R	T	M	L	W	Byte 2

Request Module Status Response

Description	msb							lsb	Byte Number
(Type Number = 177)	1	0	1	1	0	0	0	1	Byte 1
System Status	P	E	K	R	T	M	L	W	Byte 2
SCC Receive Error Count	Receive Error Count								Byte 3
SCC Transmit Error Count	Transmit Error Count								Byte 4

Description	msb lsb	Byte Number
MC Timestamp MSB	MC Timestamp MSB	Byte 5
MC Timestamp NMSB	MC Timestamp NMSB	Byte 6
MC Timestamp NLSB	MC Timestamp NLSB	Byte 7
MC Timestamp LSB	MC Timestamp LSB	Byte 8

(1) The response status bits are defined as follows:

P Indicates FI/O hardware reset
E Indicates a communications loss of greater than 2 seconds
K Indicates the Datakey has failed or is not present
R Indicates that the EIA-485 receive error count byte has rolled over
T Indicates that the EIA-485 transmit error count byte has rolled over
M Indicates an error with the MC interrupt
L Indicates an error in the LINESYNC
W Indicates that the FI/O has been reset by the Watchdog

(2) The FI/O status byte must be updated (set to '1') to reflect the faults noted in clause 12. Data Communications Protocols – a.(1). Each status bit must only be reset (set to '0') when the corresponding bit of the Request Module Status Command is a '1'. The Request Module Status Response must report the current status (subsequent to reset and sampling).

(3) The FI/O must count the number of errored frames the FI/O Communications Processor reports. Separate counts must be maintained for transmit and received frames. When an individual count rolls over (255-0), the corresponding roll-over flag must be set.

(4) FI/O modules with Datakey: On NRESET transition to High or immediately prior to any interrogation of the Datakey, the FI/O must test the presence of the Key. If absent, Status Bit “K” must be set to '1' and no interrogation take place. If an error occurs during the interrogation, Status Bit “K” must be set to '1'. FI/O modules without Datakey: Status Bit "K" must always be set to '1'

(5) The MC timestamp value must be sampled just prior to the Request Module Status Response.

c. MC Management. MC MANAGEMENT frame must be used to set the value of the MC. The 'S' bit must return status '0' on completion. The 32-bit value must be loaded into the MC at the next 0-1 transition of the LINESYNC signal. The frames are as follows:

Millisecond Counter Management Command

Description	msb							lsb	Byte Number
(Type Number = 50)	0	0	1	1	0	0	1	0	Byte 1
New MC Timestamp MSB	x	x	x	x	x	x	x	x	Byte 2
New MC Timestamp NMSB	x	x	x	x	x	x	x	x	Byte 3
New MC Timestamp NLSB	x	x	x	x	x	x	x	x	Byte 4
New MC Timestamp LSB	x	x	x	x	x	x	x	x	Byte 5

Millisecond Counter Management Response

Description	msb							lsb	Byte Number
(Type Number = 178)	1	0	1	1	0	0	1	0	Byte 1
Status	0	0	0	0	0	0	0	S	Byte 2

d. Configure Inputs. The Configure Inputs command frame must be used to change input configurations. The command-response frames are as follows:

Configure Inputs Command

Description	msb							lsb	Byte Number
(Type Number = 51)	0	0	1	1	0	0	1	1	Byte 1
Number of Items (n)	n	n	n	n	n	n	n	n	Byte 2
Item # - Byte 1	E	Input Number							Byte 3(I-1)+3
Item # - Byte 2	Leading edge filter (e)								Byte 3(I-1)+4
Item # - Byte 3	Trailing edge filter (r)								Byte 3(I-1)+5

Configure Inputs Response

Description	msb							lsb	Byte Number
(Type Number = 179)	1	0	1	1	0	0	1	1	Byte 1
Status	0	0	0	0	0	0	0	S	Byte 2

Block field definitions must be as follows:

E Ignore Input Flag. "1" = do not report transitions for this input, "0" = report transitions for this input

e A one-byte leading edge filter specifying the number of consecutive input samples which must be "0" before the input is considered to have entered to "0" state from "1" state (range 1 to 255, 0 = disabled)

r A one-byte trailing edge filter specifying the number of consecutive input samples which must be "1" before the input

is considered to have entered to "1" state from "0" state (range 1 to 255, 0 = disabled)

S return status S = '0' on completion or '1' on input error out of range

e. Poll Raw Input Data. The Poll Raw Input Data frame must be used to poll the FI/O for the current unfiltered status of all inputs. The response frame must contain 8 bytes (2A) or 15 bytes (2B) of information indicating the current input status. The frames are as follows:

Poll Raw Input Data Command

Description	msb							lsb	Byte Number
(Type Number = 52)	0	0	1	1	0	1	0	0	Byte 1

Poll Raw Input Data Response (2070-2A)

Description	msb							lsb	Byte Number
(Type Number = 180)	1	0	1	1	0	1	0	0	Byte 1
Inputs I0 (lsb) to I7 (msb)	x	x	x	x	x	x	x	x	Byte 2
Inputs I8 to I63	x	x	x	x	x	x	x	x	Bytes 3 to 9
MC Timestamp MSB	x	x	x	x	x	x	x	x	Byte 10
MC Timestamp NMSB	x	x	x	x	x	x	x	x	Byte 11
MC Timestamp NLSB	x	x	x	x	x	x	x	x	Byte 12
MC Timestamp LSB	x	x	x	x	x	x	x	x	Byte 13

Poll Raw Input Data Response (2070-8)

Description	msb							lsb	Byte Number
(Type Number = 180)	1	0	1	1	0	1	0	0	Byte 1
Inputs I0 (lsb) to I7 (msb)	x	x	x	x	x	x	x	x	Byte 2
Inputs I8 to I119	x	x	x	x	x	x	x	x	Bytes 3 to 16
MC Timestamp MSB	x	x	x	x	x	x	x	x	Byte 17
MC Timestamp NMSB	x	x	x	x	x	x	x	x	Byte 18
MC Timestamp NLSB	x	x	x	x	x	x	x	x	Byte 19
MC Timestamp LSB	x	x	x	x	x	x	x	x	Byte 20

f. Poll Filtered Input Data. The Poll Filtered Input Data frame must be used to poll the FI/O for the current filtered status of all inputs. The response frame must contain 8 bytes (2A) or 15 bytes (2B) of information indicating the current filtered status of the inputs. Raw input data must be provided in the response for inputs that are not configured for filtering. The frames are as follows:

Poll Filter Input Data Command

Description	msb							lsb	Byte Number
(Type Number = 53)	0	0	1	1	0	1	0	1	Byte 1

Poll Filter Input Data Response (2070-2A)

Description	msb							lsb	Byte Number
(Type Number = 180)	1	0	1	1	0	1	0	0	Byte 1
Inputs I0 (lsb) to I7 (msb)	x	x	x	x	x	x	x	x	Byte 2
Inputs I8 to I63	x	x	x	x	x	x	x	x	Bytes 3 to 9
MC Timestamp MSB	x	x	x	x	x	x	x	x	Byte 10
MC Timestamp NMSB	x	x	x	x	x	x	x	x	Byte 11
MC Timestamp NLSB	x	x	x	x	x	x	x	x	Byte 12
MC Timestamp LSB	x	x	x	x	x	x	x	x	Byte 13

Poll Filter Input Data Response (2070-8)

Description	msb							lsb	Byte Number
(Type Number = 181)	1	0	1	1	0	1	0	1	Byte 1
Inputs I0 (lsb) to I7 (msb)	x	x	x	x	x	x	x	x	Byte 2
Inputs I8 to I119	x	x	x	x	x	x	x	x	Bytes 3 to 16
MC Timestamp MSB	x	x	x	x	x	x	x	x	Byte 17
MC Timestamp NMSB	x	x	x	x	x	x	x	x	Byte 18
MC Timestamp NLSB	x	x	x	x	x	x	x	x	Byte 19
MC Timestamp LSB	x	x	x	x	x	x	x	x	Byte 20

g. Poll Input Transition Buffer. The Poll Input Transition Buffer frame must poll the FI/O for the contents of the input transition buffer. The response frame must include a three-byte information field for each of the input changes that have occurred since the last interrogation. The frames are as follows:

Poll Input Transition Buffer Command

Description	msb							lsb	Byte Number
(Type Number = 54)	0	0	1	1	0	1	1	0	Byte 1
Block Number	x	x	x	x	x	x	x	x	Byte 2

Poll Input Transition Buffer Response

Description	msb							lsb	Byte Number
(Type Number = 182)	1	0	1	1	0	1	1	0	Byte 1

Description	msb							lsb	Byte Number
Block Number	x	x	x	x	x	x	x	x	Byte 2
Number of Entries	x	x	x	x	x	x	x	x	Byte 3
Item #	S	Input Number							Byte 3(I-1)+4
Item # MC Timestamp NLSB	x	x	x	x	x	x	x	x	Byte 3(I-1)+5
Item # MC Timestamp LSB	x	x	x	x	x	x	x	x	Byte 3(I-1)+6
Status	0	0	0	0	C	F	E	G	Byte 3(I-1)+7
MC Timestamp MSB	x	x	x	x	x	x	x	x	Byte 3(I-1)+8
MC Timestamp NMSB	x	x	x	x	x	x	x	x	Byte 3(I-1)+9
MC Timestamp NLSB	x	x	x	x	x	x	x	x	Byte 3(I-1)+10
MC Timestamp LSB	x	x	x	x	x	x	x	x	Byte 3(I-1)+11

(1) Each detected state transition for each active input (see configuration data) is placed in the queue as it occurs. The FI/O must set the 'F' bit to '1' when attempting to record a transition and the Transition Buffer is full. While the Transition Buffer is full, all subsequent entries must be discarded. Bit definitions are as follows:

S Indicates the state of the input after the transition
C Indicates the 255 transition entries limit has been exceeded
F Indicates the transition buffer limit has been exceeded
G Indicates the requested block number is out of monotonic increment sequence
E Same block number requested, E is set in response

(2) The Block Number byte is a monotonically increasing number incremented after each command issued by the CPU Module. When the FI/O Module receives this command, it must compare the associated Block Number with the Block Number of the previously received command. If it is the same, the previous buffer must be re-sent to the CPU Module and the 'E' flag set in the status response frame. If it is not equal to the previous Block Number, the old buffer must be purged and the next block of data sent. If the block number is not incremented by one, the status G bit must be set. The block number received becomes the current number (even if out of sequence). The Block Number byte sent in the response block must be the same as that received in the command block. Counter rollover must be considered as a normal increment.

(3) The Timestamp must equal the MC value at the time the Poll Input Transition Buffer Response is generated.

h. Set Outputs. The Set Outputs frame must be used to command the FI/O to set the Outputs according to the data in the frame. If there is any error configuring the outputs, the 'E' flag in the response frame must be set to '1'. If the

LINESYNC reference has been lost, the 'L' bit in the response frame must be set. Loss of LINESYNC reference must also be indicated in system status information. The output bytes depend upon field I/O module. These command and response frames are as follows:

Set Outputs Command

Description	msb							lsb	Byte Number
(Type Number = 55)	0	0	1	1	0	1	1	1	Byte 1
Outputs O0 (lsb) to O7 (msb) Data	x	x	x	x	x	x	x	x	Byte 2
Outputs O8 to O103 Data	x	x	x	x	x	x	x	x	Bytes 3 to 14
Outputs O0 (lsb) to O7 (msb) Control	x	x	x	x	x	x	x	x	Byte 15
Outputs O8 to O103 Control	x	x	x	x	x	x	x	x	Bytes 16 to 27

Set Outputs Response

Description	msb							lsb	Byte Number
(Type Number = 183)	1	0	1	1	0	1	1	1	Byte 1
Status	0	0	0	0	0	0	L	E	Byte 2

i. Configure Watchdog. The Configure Watchdog frames must be used to change the software watchdog timeout value. The Command and response frames are as follows:

Configure Watchdog Command

Description	msb							lsb	Byte Number
(Type Number = 58)	0	0	1	1	1	0	1	0	Byte 1
Timeout Value	x	x	x	x	x	x	x	x	Byte 2

Configure Watchdog Response

Description	msb							lsb	Byte Number
(Type Number = 186)	1	0	1	1	1	0	1	0	Byte 1
Status	0	0	0	0	0	0	0	Y	Byte 2

(1) The timeout value must be in the range between 10 to 100 milliseconds. If the value is lower than 10, 10 must be assumed. If the value is greater than 100, 100 must be assumed.

(2) On receipt of this frame, the watchdog timeout value must be changed to the value in the message and the "Y" bit set. The response frame bit (Y) must indicate a '1' if the watchdog has been previously set and a '0' if not.

j. Controller Identification. This is a legacy message command / response for FI/O modules with Datakey resident. Upon command, a response frame containing the 128 bytes of the Datakey See previous sections on Request Module Status for FI/O Status Bit 'K' definition. If "K" bit set, only the first two bytes must be returned. The Command and Response frames are as follows:

Controller Identification Command

Description	msb							lsb	Byte Number
(Type Number= 59)	0	0	1	1	1	0	1	1	Byte 1

Controller Identification Response

Description	msb							lsb	Byte Number
(Type Number = 187)	1	0	1	1	1	0	1	1	Byte 1
Status	0	0	0	0	0	0	0	K	Byte 2
Datakey	x	x	x	x	x	x	x	x	Bytes 3 to 130

k. Module Identification. The I/O Module Identification Command frame must be used to request the FI/O Identification value. A response of "1" must be returned by 2070-2A, "2" by 2070-8, "3" is reserved for NEMA TS 2 Type 1 FI/O and "32 to 40" are reserved for ITS Cabinets. The command and response frames are shown as follows:

I/O Module Identification Command

Description	msb							lsb	Byte Number
(Type Number = 60)	0	0	1	1	1	1	0	0	Byte 1

I/O Module Identification Response

Description	msb							lsb	Byte Number
(Type Number = 188)	1	0	1	1	1	1	0	0	Byte 1
FI/O I D byte	x	x	x	x	x	x	x	x	Byte 2

D. Type 2070-3 Front Panel Assembly.

1. General. The Type 2070-3 Front Panel Assembly (FPA) must be delivered with one of the three options as defined in this clause. All options must consist of a panel with Latch assembly and two TSD #1 hinge attaching devices, assembly PCB,

external serial port connector(s), CPU active LED indicator, and FP Harness Interface. The options must include the additional features, as follows:

Option 3A	FPA controller, two keyboards, AUX switch, alarm bell and Display A
Option 3B	FPA controller, two keyboards, AUX switch, alarm bell and Display B - required for NEMA compliance (TS-1 & TS-2 type1) 8 x 40 display with 2 keypads
Option 3C	System Serial Port 6 Lines, isolated and vectored to Connector C60S.

2. Keyboards. Provide two KEYBOARDS , one with sixteen keys for hexadecimal alphanumeric entry and the other with twelve keys to be used for cursor control and action symbol entry. Engrave or emboss each key with its function character. Each key must have an actuation force between 50 and 100 grams and provide a positive tactile indication of contact closure. Key contacts must be hermetically sealed, have a design life of over one million operations, be rated for the current and voltage levels used, and stabilize within 5 milliseconds following contact closure.

3. CPU Active Indicator. The cathode of the CPU ACTIVE LED INDICATOR must be electrically connected to the CPU Activity LED signal and be pulled up to +5 VDC.

4. Display. The DISPLAY must consist of a Liquid Crystal Display (LCD), a backlight, and a contrast potentiometer control. Display A must have 4 lines of 40 characters each with a minimum character dimensions of 0.20 inches wide by 0.41 inches high and an electro -luminescent (EL) backlight. Display B must have 8 lines of 40 characters each with minimum dimensions of 0.10 inches wide by 0.17 high and either LED or EL backlight.

   a. Each character must be composed of a 5 x 7 dot matrix with an underline row or a 5 x 8 dot matrix. The viewing angle of the LCD must be optimized for direct (90 degrees) viewing, +/-35 degrees vertical, +/-45 degrees horizontal. The LCD must have variable contrast with a minimum ratio of 4:1. The LCD must be capable of displaying, at any position on the Display, any of the standard ASCII characters as well as user-defined characters.

   b. The backlight must be turned on and off by the Controller Circuitry. The backlight and associated circuitry must consume no power when in off state. A potentiometer must control the LCD contrast with clockwise rotation increasing contrast. The contrast must depend on the angular position of the potentiometer, which must provide the entire contrast range of the LCD.

   c. Cursor display must be turned ON and OFF by command. When ON, the cursor must be displayed at the current cursor position. When OFF, no cursor

is to be displayed. All other cursor functions (positioning, etc.) must remain in effect.

5. FPA Controller. The FPA CONTROLLER must function as the Front Panel Device controller interfacing with the CPU Module.

   a. Provide a FPA RESET Switch on the Assembly PCB. The momentary CONTROL switch must be logic OR'd with the CPU RESET Line, producing a FPA RESET Output. Upon FPA RESET being active or receipt of a valid Soft Reset display command, the following must occur:

      (1) Auto-repeat, blinking, auto-wrap, and auto-scroll must be set to OFF.

      (2) Each special character must be set to ASCII SPC (space).

      (3) The tab stops must be set to columns 9, 17, 25, and 33.

      (4) The backlight timeout value must be set to 6 (60 seconds).

      (5) The backlight must be extinguished.

      (6) The display must be cleared (all ASCII SPC).

      (7) The FPA module must transmit a power up string through /sp6 to the CPU once power is applied to the FPA, or the FPA hardware RESET BUTTON IS PUSHED. The string is "ESC [PU", hex value "1B 5B 50 55".

   b. When a keypress is detected, the appropriate key code must be transmitted to SP6-RxD. If two or more keys are depressed simultaneously, no code is to be sent. If a key is depressed while another key is depressed, no additional code is to be sent.

   c. Auto-repeat must be turned ON and OFF by command. When ON, the key code must be repeated at a rate of 5 times per second starting when the key has been depressed continuously for 0.5 second, and must terminate when the key is released or another key is pressed.

   d. When the AUX Switch is toggled, the appropriate AUX Switch code must be transmitted to the CPU.

   e. The controller circuitry must be capable of composing and storing eight special graphical characters on command, and displaying any number of these characters in combination with the standard ASCII characters. Undefined characters must be ignored. User-composed characters must be represented in the communication protocol on Page 9-7-12. P1 represents the special character number (1-8). Pn's represent columns of pixels from left to right. The most significant bit of each Pn represents the top pixel in a column and the

least significant bit must represent the bottom pixel. A logic '1' must turn the pixel ON. There must be a minimum of 5 Pn's for 5 columns of pixels in a command code sequence terminated by an "f." If the number of Pn's are more than the number of columns available on the LCD, the extra Pn's must be ignored. P1 and all Pn's must be in ASCII coded decimal characters without leading zero.

f. Character overwrite mode must be the only display mode supported. A displayable character received must always overwrite the current cursor position on the Display. The cursor must automatically move right one character position on the Display after each character write operation. When the rightmost character on a line (position 40) has been overwritten, the cursor position must be determined based on the current settings of the auto-wrap mode.

g. Auto-wrap must be turned ON & OFF by command. When ON, a new line operation must be performed after writing to position 40. When OFF, upon reaching position 40, input characters must continue to overwrite position 40.

h. Cursor positioning must be non-destructive. Cursor movement must not affect the current display, other than blinking the cursor momentarily and periodically hiding the character at that cursor position.

i. Blinking characters must be supported, and be turned ON and OFF by command. When ON, all subsequently received displayable characters must blink at the rate of 1 Hertz with a 60% ON / 40% OFF duty cycle. It must be possible to display both blinking and non-blinking characters simultaneously.

j. Tab stops must be configurable at all columns. A tab stop must be set at the current cursor position when a SetTabStop command is received. Tab Stop(s) must be cleared on receipt of a ClearTabStop command. On receipt of the HT (tab) code, the cursor must move to the next tab stop to the right of the cursor position. If no tab stop is set to the right of the current cursor position, the cursor must not move.

k. Auto-scroll must be turned ON and OFF by command. When ON, a Line Feed or new line operation from the bottom line must result in the display moving up one line. When OFF, a Line Feed or new line from the bottom line must result in the top line clearing, and the cursor being positioned on the top line.

l. The display must have a buffer. The screen must be refreshed from the buffer at a rate of no less than 20 times per second.

m. The Display back light must illuminate when any key is pressed and illuminate or extinguish by command. The backlight must extinguish when no key is pressed for a specified time. This time must be program selected by command, by a number in the range 0 to 63 corresponding to that number of 10-second

intervals. A value of 1 must correspond to a timeout interval of 10 seconds. A value of 0 must indicate no timeout.

n. The Command Codes must use the following conventions:

(1) Parameters and Options: Parameters are depicted in both the ASCII and hexadecimal representations as the letter 'P' followed by a lower-case character or number. These are interpreted as follows:

Pn: Value parameter, to be replaced by a value, using one ASCII character per digit without leading zeros.
P1: Ordered and numbered parameter. One of a listed known parameters with a specified order and number (Continues with P2, P3, etc.)
Px: Display column number (1-40), using one ASCII character per digit without leading zero.
Py: Display line (1-4) one ASCII character
...: Continue the list in the same fashion

Values of 'h' (0x68) and 'l' (0x6C) are used to indicate binary operations. 'h' represents ON (high), 'l' represents OFF (low).

(2) ASCII Representation: Individual characters are separated by spaces; these are not to be interpreted as the space character, which is depicted by SPC.

(3) Hexadecimal Representation: Characters are shown as their hexadecimal values and will be in the range 0x00 to 0x7F (7 bits).

o. The Controller Circuit must communicate via a SP6 asynchronous serial interface. The interface must be configured for 38.4 kilobits per second, 8 data bits, 1 stop bit, and no parity.

p. C50 ENABLE function when grounded by pins 1 and 5, must be brought to Connectors A1, pin B21 for the purpose of disabling the module channel 2, (SP4).

6. Electronic Bell. The Front Panel must include an electronic bell to signal receipt of (0x07). The bell must sound at 2,000 Hertz, with a minimum output rating of 85 dB upon receipt of (0x07). Receipt of all other characters and ESC codes must continue during the time the bell sounds.

E. Type 2070-4 Power Supply Module.

1. General. The Type 2070-4A Power Supply Module must be independent, self contained Module, vented, and cooled by convection only. The Module must slide into the unit's power supply compartment from the back of the Chassis and be attached to the Backplane Mounting Surface by its four TSD #3 Devices.

a. The Type 2070-4B Module must meet the same requirements as the 2070-4A, except for 3.5 amperes of +5 VDC.

2. Module Front. An "On/Off" POWER Switch, four LED DC Power Indicators, PS Receptacle POWER Connectors, and the Incoming AC Fuse protection must be provided on the Module Front. The LED DC POWER Indicators must indicate all required DC voltages meet the following conditions: the +5 VDC is within 5% and the 12 VDC is within 8% of their nominal levels.

3. Input Protection. Provide two 0.5-Ohm, 10-watt wire-wound power resistors with a 0.2 micro Henries inductance (one on the AC+ Line & on the AC- Line). Provide three 20 Joule surge arrestors between AC+ to AC-, AC+ to EG, and AC- to EG. A 0.68 μF capacitor must be placed between AC+ & AC- (between the resistor & arrestors).

4. +5VDC Standby Power. Provide +5 VDC STANDBY POWER to hold up specified circuitry during the power down period. It must consist of the monitor circuitry, hold up capacitors, and charging circuitry. Provide a charging circuit that under normal operation, fully charges and float the capacitors consistent with the manufacturers' recommendations. The Hold Up power requirements must be a minimum constant drain of 600 microamperes at a range of +5 VDC to +2 VDC for over 600 minutes.

5. Monitor Circuitry. Provide MONITOR CIRCUITRY to monitor incoming AC Power for Power Failure and Restoration and LINESYNC generation.

   a. The ACFAIL/POWER DOWN Output Lines must go LOW (ground true) immediately upon Power Failure. The Lines must transition to HIGH at Power Restoration. The Lines must be driven separately. The SYSRESET/POWERUP Output Lines must transition to LOW 525 +/-25 milliseconds after ACFAIL/POWER DOWN transition to LOW. The Lines must transition to HIGH 225 +/-25 milliseconds after Power Restoration and the supply is fully recovered. The Lines must be driven separately.

   b. The monitor circuitry must switch the +5 VDC Standby ON immediately upon Power Failure and isolate (OFF) the line at Power Up.

   c. The 60 Hz Square Wave LINESYNC signal must be generated by a crystal oscillator, which must be synchronized to the 60-Hertz VAC incoming power line at 120 and 300 degrees. A continuous square wave signal must be +5 VDC amplitude, 8.333 milliseconds half-cycle pulse duration, and 50 +/-1% duty cycle. The output must have drive sink capability of 16 milliamperes. A 2 K-Ohm pull-up resistor must be connected between the output and +5 VDC. The monitor circuit must compensate for missing pulses and line noise during normal operation.

d. The LINESYNC must continue until SYSRESET transitions LOW and begin when SYSRESET transitions HIGH.

6. Power Supply Requirements.

Voltage	Tolerances	I Minimum	I Maximum
+5 VDC	+4.875 to +5.125 VDC	1.0 ampere	10.0 ampere- MODULE 2070-4A 3.5 ampere– MODULE 2070-4B
+12 VDC Serial	+11. 4 to +12. 6 VDC	0.1 ampere	0.5 ampere
-12 VDC Serial	-11. 4 to –12. 6 VDC	0.1 ampere	0.5 ampere
+12 VDC	+11. 4 to +12. 6 VDC	0.1 AMP	1.0 AMP

a. Line/Load Regulation. Line / Load Regulation must meet the table tolerance values for voltage range of 90 to 135 VAC, the maximum and minimum loads called out in the table and including ripple noise.

b. Efficiency. 70% minimum.

c. Ripple and Noise. Less than 0.2% RMS, 1% peak to peak or 50 millivolts, whichever is greater.

d. Voltage Overshoot. No greater than 5%, all outputs.

e. Overvoltage Protection. 130% V out for all outputs.

f. Circuit Protection. Automatic recovery upon removal of fault.

g. Inrush Current. Cold Start Inrush must be less than 25 amperes at 115VAC.

h. Transient Response. Output voltage back to within 1% in less than 500 microseconds on a 50% Load change. Peak transient not to exceed 5%.

i. Holdup Time. The power supply must supply 30 watts minimum for 550 milliseconds after ACFAIL going LOW. The supply must be capable of holding up the Unit for two 500 milliseconds Power Loss periods occurring in a 1.5-second period.

j. Remote Sense. +5 VDC compensates 250 millivolts total line drop. Open sense load protection required.

F. Unit Chassis and Type 2070-5 VME Cage Assembly.

1. General.

a. The Chassis consists of the metal housing, Serial Motherboard, Back-plane Mounting Surface, Power Supply Module Supports, slot card guides, Wiring Harnesses, and Cover Plate(s).

b. All external screws must be countersunk and be Phillips flat head stainless steel type.

c. The housing must be treated with clear chromate and the slot designation labeled on the back-plane mounting surface above the upper slot card guide.

d. The Chassis must be cooled by convection only. The top and bottom pieces of the housing must be slotted for vertical ventilation.

2. Serial Motherboard. Serial Motherboard must function as support for its connectors, A1 to A5 and FP, and as the interface between the CPU and the dedicated modules/Front Panel carrying both serial communications, logic, and power circuits. The PCB must be multi-layered, with one layer plane assigned to DC Ground.

   a. A wiring harness PS2 must be provided between the Type 2070-4 Power Supply and the Motherboard PCB (provide strain relief). Test points must be provided on the FPA side of the Motherboard for PS2 lines.

   b. A wiring harness FP must be provided, linking the Motherboard with the FPA.

3. Type 2070-5 VME Cage Assembly. Type 2070-5 VME Cage Assembly must consist of 3U five slot/connector VME Cage, Front Mounting Plate, and PS1 Harness. The VME Cage must conform to VME Standard IEEE P1014/D12 for 3U Cage. All slot/connectors must be A24:D16 Interface.

4. Type 2070-1A CPU Main Controller Board. The Type 2070 – 1A CPU Main Controller Board must either be affixed to the Transition Board via at least four stand-off devices or mounted in a one slot VME board assembly (removable). A PS1L Harness must be supplied with one end mating to the PS1 power supply connector and the other end mated to the MCB DIN Connector. A 100-Ohm resistor per line must terminate the VME bus lines.

G. Details.

Table of Contents

Type 2070 Unit	-	Chassis Front View	Figure 3
Type 2070 Unit	-	Chassis Rear View	Figure 4
Type 2070 Unit	-	Chassis Top View	Figure 5
Type 2070 Unit	-	Chassis Motherboard	Figure 6
Type 2070 Unit	-	Motherboard A Connector Pinouts	Figure 7
Type 2070 Unit	-	System PCB Modules, General	Figure 8
Type 2070-1	-	CPU Module and Serial Port/SDLC Protocol	Figure 9
Type 2070-2	-	Field I/O Module	Figure 10

Type 2070-2	-	Field I/O Module C1 & C11 Connectors	Figure 11
Type 2070-3	-	Front Panel Assembly	Figure 12
Type 2070-3	-	Front Panel Assembly, Key Codes	Figure 13
Type 2070-3	-	Front Panel Assembly, Key Codes	Figure 14
Type 2070-4	-	Power Supply Module	Figure 15
Type 2070-5	-	VME Cage Assembly	Figure 16

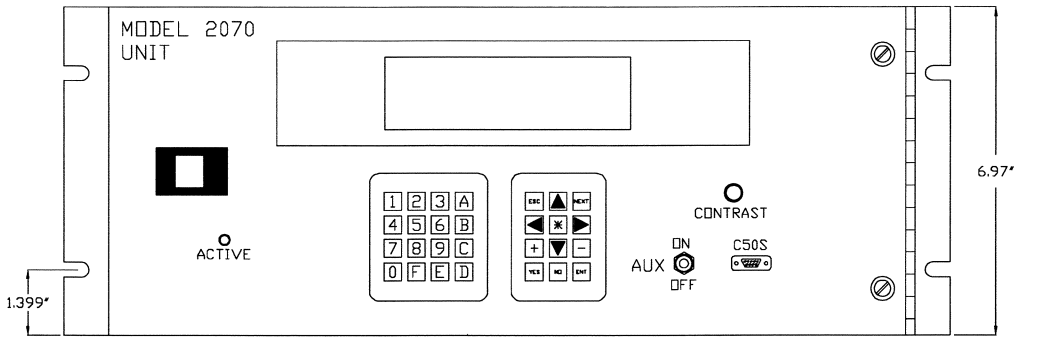

FRONT PANEL INSTALLED

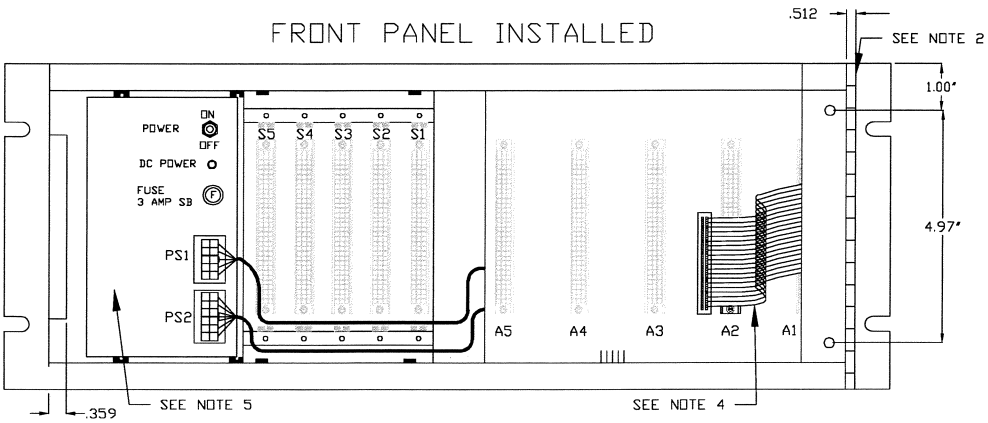

FRONT PANEL REMOVED

NOTES (THIS DETAIL)

1. The unit shall be capable of mounting to a Standard EIA-310B Rack using 4U open end mounting slots.

2. Continuous stainless steel hinge (.157" maximum hinge barrel) that attaches to the Front Panel by two TSD #1 Thumbscrew devices.

3. Actual location of ACTIVE light and contrast control shall be limited to ACTIVE light on the left side of the panel and the contrast control on the right side. They shall be located greater than 1" from other devices, connector or latch.

4. The length of the Front Panel Harness shall be no less than 5.00"

5. A LED indicator for each DC voltage shall be provided.

6. With the hinge installed, the distance between the TSD hole center & the CHASSIS Right Side (inside plane) shall be .551"

TITLE: MODEL 2070 CHASSIS FRONT VIEW	
Rev Date 2-11-04	9-7-1
FEBRUARY 20,2004	

Figure 3
Chassis Front View

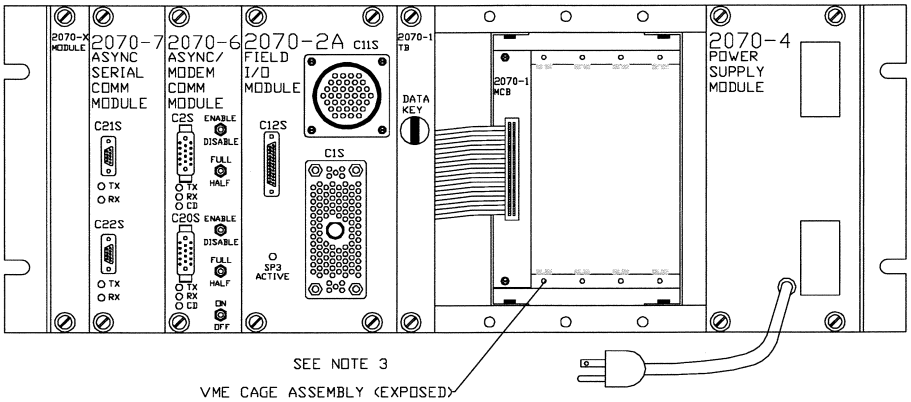

REAR VIEW, LOADED

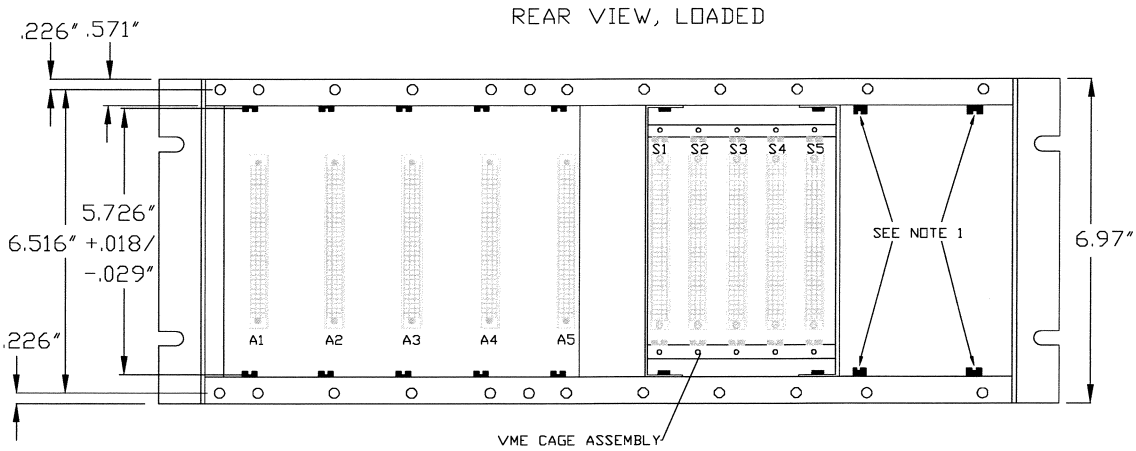

REAR VIEW, UNLOADED

NOTES (THIS DETAIL)

1. Four permanently attached 8" long Card Guides SAE 1800F (OR EQUAL) beginning .512" from the backplane mounting surface.
2. TB - TRANSITION BOARD
   MCB - MAIN CONTROLLER BOARD
3. Maximum length of harness shall be 4" and shall not protrude beyond the back of the 2070 unit.
4. The VME Cage Assembly Openning shall be delivered covered by a blank panel. Matching M3 PEM fasteners shall be provided on the back plane surface for panel mounting.
5. Power Supply will be marked with 2070-4A or 2070-4B

TITLE: MODEL 2070 CHASSIS FRONT VIEW	
Rev Date 2-11-04	9-7-2
FEBRUARY 20,2004	

Figure 4
Chassis Rear View

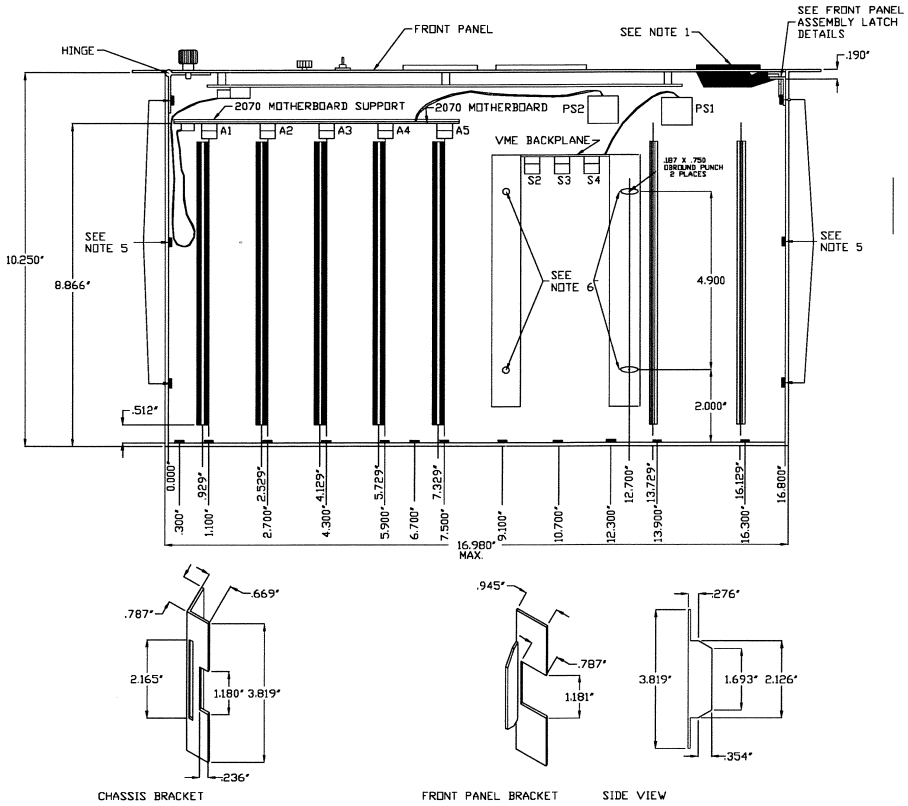

CHASSIS BRACKET FRONT PANEL BRACKET SIDE VIEW

NOTES (THIS DETAIL)

FRONT PANEL ASSEMBLY LATCH DETAILS

1. Front Panel Assembly Latch mating with and rigidly held in place by Chassis Guide Latch/member shall be provided. The member shall vertically support the Front Panel Assembly in two other points besides the Latch.
2. Nylon card guides, SAE 1800F (OR EQUAL), shall be provided (top and bottom) for Mother Slot/Connectors A1 to A5. The Guides shall begin .512" from the Backplane surface.
3. M3 PEM Self-clinching Miniature Fasteners (OR EQUAL) shall be used for mounting holes located on Backplane Surface.
4. All harnesses shall have a minimum slack of 1.00" when connected.
5. M3 PEM Self-clinching Miniature Fasteners (OR EQUAL) shall be used for mounting holes to match the TSD #3 Thumbscrew Devices on the Model 2070-8 Module. Fastener centers shall be .250" above unit baseline.
6. Eight 6-32 Phillips head counter-sunk screws, 4 top and 4 bottom, shall be used to mount the cage assembly to the 2070 Chassis.
7. The 2070 chassis top & bottom sections shall be constructed with a continuous .621" folded lip along the front perpendicular to the 2070 top and bottom sections. The top and bottom sections of the 2070 chassis shall be recessed .709" as measured from the front surface of the front panel.

TITLE: MODEL 2070 CHASSIS TOP VIEW	
Rev Date 2-11-04	9-7-3
FEBRUARY 20,2004	

Figure 5
Chassis Top View

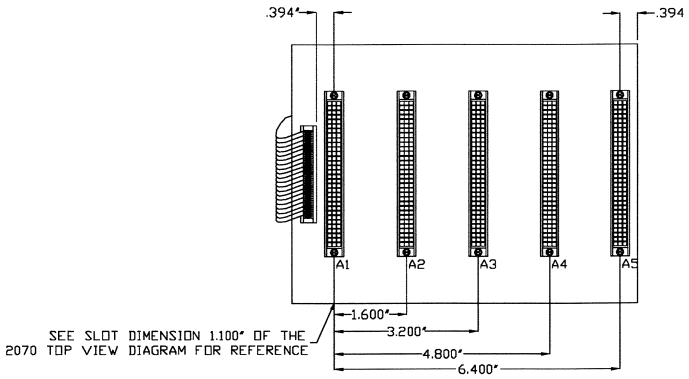

FRONT VIEW

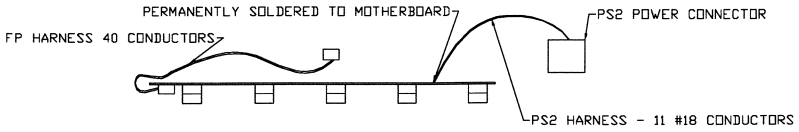

TOP VIEW

FP HARNESS PIN/WIRING ASSIGNMENT			
PIN	CONNECTOR ROW A	PIN	CONNECTOR ROW B
1	SP4-TXD+	2	SP4-TXD-
3	SP4-RXD+	4	SP4-RXD-
5	SP6-TXD+	6	SP6-TXD-
7	SP6-RXD+	8	SP6-RXD-
9	NA	10	NA
11	NA	12	NA
13	NA	14	NA
15	NA	16	NA
17	NA	18	NA
19	NA	20	NA
21	DC GROUND #1	22	DC GROUND #1
23	+12 VDC SERIAL	24	-12 VDC SERIAL
25	DC GROUND #1	26	DC GROUND #1
27	CPU LED	28	DC GROUND #1
29	CPURESET	30	DC GROUND #1
31	DC GROUND #1	32	C50 ENABLE
33	DC GROUND #1	34	+5 VDC
35	+5 VDC	36	+5 VDC
37	+5 VDC	38	+5 VDC
39	NA	40	NA

PS2 HARNESS PIN/WIRING ASSIGNMENT	
PIN	FUNCTION
1	+5 VDC
2	+12 VDC SERIAL
3	-12 VDC SERIAL
4	DC GND #1 (+5 VDC & 12 SERIAL)
5	+5 VDC STANDBY
6	+12 VDC - ISOLATED
7	DC GROUND #2 (+12 VDC ONLY)
8	POWER DOWN
9	POWER UP / SYS RESET
10	EQUIPMENT GROUND
11	LINESYNC
12	NA

NOTES (THIS DETAIL)

1. The Motherboard shall be a .125" minimum thickness pcb mounted in a vertical position.
2. A1 to A5 receptacle connectors shall be 96 socket contact DIN 41612 connectors (ROBINSON NUGENT #DIN 96RSC or ELCO Series 8477 Three Row Inverted Socket OR EQUAL).
3. The FP Harness may be located on either side of the motherboard. The FP Harness shall either be directly soldered to the motherboard or a header used.

TITLE: **MODEL 2070 CHASSIS MOTHERBOARD**

Rev Date 2-11-04

FEBRUARY 20, 2004

9-7-4

Figure 6
Chassis Motherboard

A1 CONNECTOR PIN OUT			
PIN	A	B	C
1	SP3TXD+	SP6TXD+	SP5TXD+
2	SP3TXD-	SP6TXD-	SP5TXD-
3	SP3RXD+	SP6RXD+	SP5TXC+
4	SP3RXD-	SP6RXD-	SP5TXC-
5	SP3RTS+	SP3TXCO+	SP5RXD+
6	SP3RTS-	SP3TXCO-	SP5RXD-
7	SP3CTS+	SP3TXCI+	SP5RXC+
8	SP3CTS-	SP3TXCI-	SP5RXC-
9	SP3DCD+	SP3RXC+	SP3TXD+
10	SP3DCD-	SP3RXC-	SP3TXD-
11	SP4TXD+	SP4TXD+	SP3RXD+
12	SP4TXD-	SP4TXD-	SP3RXD-
13	SP4RXD+	SP4RXD+	SP3RTS+
14	SP4RXD-	SP4RXD-	SP3RTS-
15	NA	NA	SP3CTS+
16	NA	NA	SP3CTS-
17	NA	NA	SP3DCD+
18	NA	NA	SP3DCD-
19	NA	NA	SP3TXCO+
20	NA	NA	SP3TXCO-
21	DCG #1	C50 ENABLE	SP3TXCI+
22	NETWK1	NA	SP3TXCI-
23	NETWK2	NA	SP3RXC+
24	NA	LINESYNC	SP3RXC-
25	NETWK3	POWERUP	CPURESET
26	NETWK4	POWERDN	FPLED
27	DCG #1	DCG #1	DCG #1
28	+12 SER	-12 SER	+5 STDBY
29	+5 VDC	+5 VDC	+5 VDC
30	DCG #1	DCG #1	DCG #1
31	+12 VDC	+12 VDC	+12 VDC
32	DCG #2	DCG #2	DCG #2

A2 TO A5 CONNECTOR PIN OUT			
PIN	A	B	C
1	SP1TXD+	SP6TXD+	SP5TXD+
2	SP1TXD-	SP6TXD-	SP5TXD-
3	SP1RXD+	SP6RXD+	SP5TXC+
4	SP1RXD-	SP6RXD-	SP5TXC-
5	SP1RTS+	SP1TXCO+	SP5RXD+
6	SP1RTS-	SP1TXCO-	SP5RXD-
7	SP1CTS+	SP1TXCI+	SP5RXC+
8	SP1CTS-	SP1TXCI-	SP5RXC-
9	SP1DCD+	SP1RXC+	SP3TXD+
10	SP1DCD-	SP1RXC-	SP3TXD-
11	SP2TXD+	SP4TXD+	SP3RXD+
12	SP2TXD-	SP4TXD-	SP3RXD-
13	SP2RXD+	SP4RXD+	SP3RTS+
14	SP2RXD-	SP4RXD-	SP3RTS-
15	SP2RTS+	SP2TXCO+	SP3CTS+
16	SP2RTS-	SP2TXCO-	SP3CTS-
17	SP2CTS+	SP2TXCI+	SP3DCD+
18	SP2CTS-	SP2TXCI-	SP3DCD-
19	SP2DCD+	SP2RXC+	SP3TXCO+
20	SP2DCD-	SP2RXC-	SP3TXCO-
21	DCG #1	NA	SP3TXCI+
22	NETWK1	NA	SP3TXCI-
23	NETWK2	NA	SP3RXC+
24	NA	LINESYNC	SP3RXC-
25	NETWK3	POWERUP	CPURESET
26	NETWK4	POWERDN	FPLED
27	DCG #1	DCG #1	DCG #1
28	+12 SER	-12 SER	+5 STDBY
29	+5 VDC	+5 VDC	+5 VDC
30	DCG #1	DCG #1	DCG #1
31	+12 VDC	+12 VDC	+12 VDC
32	DCG #2	DCG #2	DCG #2

NOTES (THIS DETAIL)

1. Functions are referenced to the CPU.
2. DC GND #1 for +5VDC and +12VDC Serial. DC GND #2 for +12VDC ISO.
3. A1 Connector is the furthest A Connector to the left when viewed from the unit back. All A Connectors are pin assigned the same.
4. Connector A2 to A4, pins B21 and B22 shall read "NA".
   Connector A2, pins B23 shall read "A2 Installed".
   Connector A3, pins B23 shall read "A3 Installed".
   Connector A4, pins B23 shall read "NA".
   Connector A5, pins B21 shall read "A2 Installed".
   Connector A5, pins B22 shall read "DCG #1".
   Connector A5, pins B23 shall read "A3 Installed".
5. Pin A24 (DCG #1) is reserved for network protection only, ie., "Ethernet Shield".
6. Connector A2 installed, enables SP1 and SP2.
7. Connector A3 install, enbales SP5.
8. SP3 and SP6 are always enabled.
9. C50 enabled, disconnects SP4 on connector A1.

TITLE: Motherboard A Connector Pin Assignment	
Rev Date 2-11-04	9-7-5
FERBUARY 20, 2004	

Figure 7
Motherboard A Connector Pin Assignment

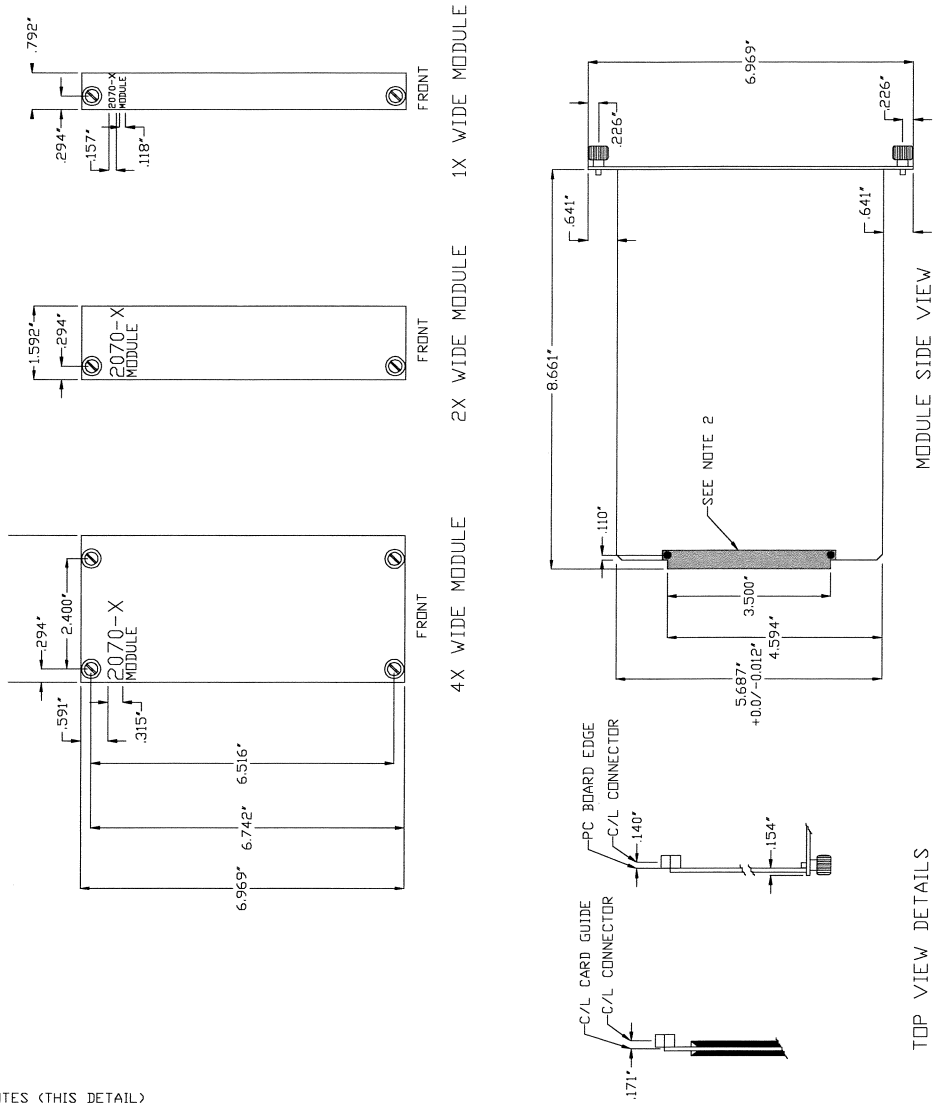

NOTES (THIS DETAIL)

1. All Thumbscrew devices on modules described in this drawing shall be TD#3 OR EQUAL.
2. 96 pin DIN connector ELCO # 00 8272 96 000 013 OR EQUAL.

TITLE: MODEL 2070 SYSTEMS PCB MODULES GENERAL	
Rev Date 2-11-04	9-7-6
FEBRUARY 20, 2004	

Figure 8
System PCB Modules General

SERIAL PORT REQUIREMENTS

A2 TO A5 CONNECTOR PIN OUT			
LOGICAL PORT	68360 PORT	RATE KBITS	PROTOCOL
SP1	SEE NOTE 4	(1)	ASYNC
SP1S	SEE NOTE 4	(2)	SYNC, HDLC, SDLC
SP2	SCC2	(1)	ASYNC
SP2S	SCC2	(2)	SYNC, HDLC, SDLC
SP3	SCC4	(1)	ASYNC
SP3S	SCC4	153.6, 614.4*	SYNC, HDLC, SDLC
SP4	SMC2	(1), 9.6*	ASYNC
SP5	SCC3	(1)	ASYNC
SP5S	SCC3	153.6, 614.4*	SYNC, HDLC, SDLC
SP6	SMC1	(1), 38.4*	ASYNC
SP8**	SEE NOTE 4	9.6**	ASYNC
SP8**	SEE NOTE 4	153.6, 614.4	SYNC, HDLC. SDLC

SDLC FRAME LAYOUT					
OPENNING FLAG	ADDR	CONTROL	INFORMATION	CRC	CLOSING FLAG
0111 1110	8 BITS	1000 0011	VARIABLE LENGTH	16 BITS	0111 1110

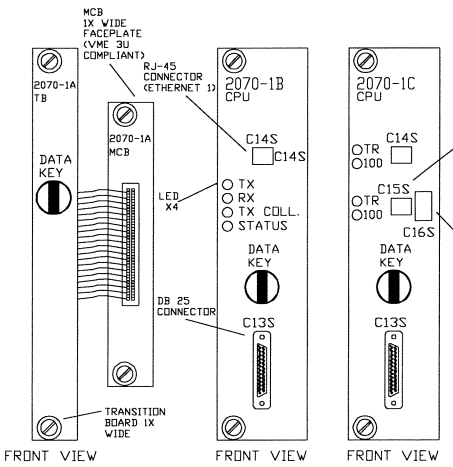

CPU FACE PANELS

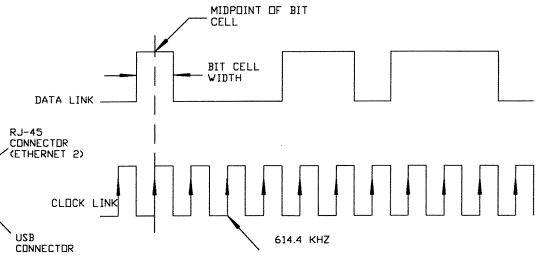

SDLC TIMING

C13S PIN ASSIGNMENT			
PIN	FUNCTION	PIN	FUNCTION
1	SP8 TX +	14	SP8 TX -
2	SP8 RX +	15	SP8 RX -
3	SP8 TXC +	16	SP8 TXC -
4	SP8 RXC +	17	SP8 RXC -
5	SP8 RTS + **	18	SP8 RTS - **
6	SP8 CTS + **	19	SP8 CTS - **
7	SP8 DCD + **	20	SP8 DCD - **
8	NA	21	NA
9	LINESYNC +	22	LINESYNC -
10	NRESET +	23	NRESET -
11	PWRDWN +	24	PWRDWN -
12	+5 VDC	25	EQUIP GND
13	DC GND #2		

C14S and C15S PIN ASSIGNMENT (ETHERNET)			
PIN	FUNCTION	PIN	FUNCTION
1	TX +	5	NA
2	TX -	6	RX -
3	RX +	7	NA
4	NA	8	NA

NOTES (THIS DETAIL)

1. (1) BPS Rates 1.2* 2.4, 4.8, 9.6, 19.2, 38.4
2. (2) BPS Rates 19.2*, 38.4, 57.6, 76.8, 153.6
3. * Default BPS Rate for indicated Port.
4. SP1 OF THE 2070-1A is 68360 SCC1. SP1 OF 2070-1B, -1C is Dual SCC1 with 68360 SCC1 assigned to ETHERNET. SP8 of the 2070-1B, -1C assigned to the Dual SCC.
5. A Post Header (ROBINSON NUGENT IDA-XX OR EQUAL) Connector with strain relief shall be provided on the MCB Front Plate and the Transition Board for mating with the interface harness. The harness shall be shielded and straight through wired.
6. ** 2070-1B, -1C only

TITLE: MODEL 2070-1C CPU	
Rev Date 11-4-05	9-7-7
FEBRUARY 4,2005	

Figure 9
2070-1A, 2070-1B and 2070-1C CPU Modules

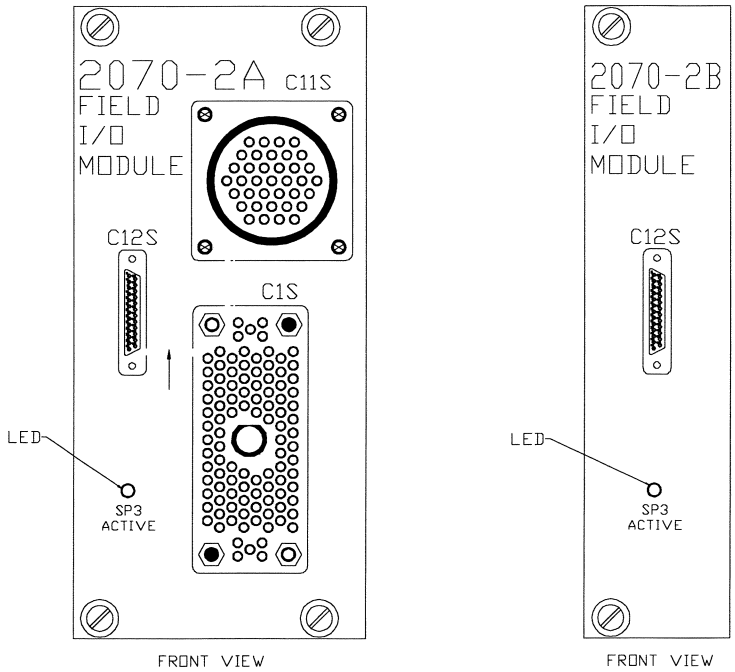

FIELD I/O FACE PANELS

NOTES (THIS DETAIL)

1. 2070-2A Faceplate shall be 4X wide. 2070-2B Faceplate shall be 2X wide. (SEE SYSTEM PCB MODULE, GENERAL DETAILS.)
2. Dark Circles in the C1S Connector denote guide pin locations and open circles denote guide socket locations.
3. Dimension "A" shall be a minimum of .50".
4. C1S - M104 Type
   C11S - 37-Pin Circular Plastic Type
   C12S - 25-Pin DB Socket Type
5. C12S PIN 12 (+5VDC) IS DERIVED from +12 VDC Power Supply

C12S PIN ASSIGNMENT			
PIN	FUNCTION	PIN	FUNCTION
1	TX5 DATA +	14	TX5 DATA -
2	RX5 DATA +	15	RX5 DATA -
3	TX5 CLOCK +	16	TX5 CLOCK -
4	RX5 CLOCK +	17	RX5 CLOCK -
5	TX3 DATA +	18	TX3 DATA -
6	RX3 DATA +	19	RX3 DATA -
7	TX3 CLOCK +	20	TX3 CLOCK -
8	RX3 CLOCK +	21	RX3 CLOCK -
9	LINE SYNC +	22	LINE SYNC -
10	NRESET +	23	NRESET -
11	POWER DOWN +	24	POWER DOWN -
12	+5 VDC	25	EQUIP GND
13	DC GND #2		

TITLE: MODEL 2070-2 FIELD I/O MODULES	
Rev Date 2-11-04	9-7-8
FEBRUARY 20, 2004	

Figure 10
Field I/O Modules

C1S PIN ASSIGNMENT

PIN	FUNCTION NAME	FUNCTION PORT	PIN	FUNCTION NAME	FUNCTION PORT	PIN	FUNCTION NAME	FUNCTION PORT	PIN	FUNCTION NAME	FUNCTION PORT
1	DC GROUND		27	O24	O4-1	53	I14	I2-7	79	I44	I6-5
2	O0	O1-1	28	O25	O4-2	54	I15	I2-8	80	I45	I6-6
3	O1	O1-2	29	O26	O4-3	55	I16	I3-1	81	I46	I6-7
4	O2	O1-3	30	O27	O4-4	56	I17	I3-2	82	I47	I6-8
5	O3	O1-4	31	O28	O4-5	57	I18	I3-3	83	O40	O6-1
6	O4	O1-5	32	O29	O4-6	58	I19	I3-4	84	O41	O6-2
7	O5	O1-6	33	O30	O4-7	59	I20	I3-5	85	O42	O6-3
8	O6	O1-7	34	O31	O4-8	60	I21	I3-6	86	O43	O6-4
9	O7	O1-8	35	O32	O5-1	61	I22	I3-7	87	O44	O6-5
10	O8	O2-1	36	O33	O5-2	62	I23	I3-8	88	O45	O6-6
11	O9	O2-2	37	O34	O5-3	63	I28	I4-5	89	O46	O6-7
12	O10	O2-3	38	O35	O5-4	64	I29	I4-6	90	O47	O6-8
13	O11	O2-4	39	I0	I1-1	65	I30	I4-7	91	O48	O7-1
14	DC GROUND		40	I1	I1-2	66	I31	I4-8	92	DC GROUND	
15	O12	O2-5	41	I2	I1-3	67	I32	I5-1	93	O49	O7-2
16	O13	O2-6	42	I3	I1-4	68	I33	I5-2	94	O50	O7-3
17	O14	O2-7	43	I4	I1-5	69	I34	I5-3	95	O51	O7-4
18	O15	O2-8	44	I5	I1-6	70	I35	I5-4	96	O52	O7-5
19	O16	O3-1	45	I6	I1-7	71	I36	I5-5	97	O53	O7-6
20	O17	O3-2	46	I7	I1-8	72	I37	I5-6	98	O54	O7-7
21	O18	O3-3	47	I8	I2-1	73	I38	I5-7	99	O55	O7-8
22	O19	O3-4	48	I9	I2-2	74	I39	I5-8	100	O36	O5-5
23	O20	O3-5	49	I10	I2-3	75	I40	I6-1	101	O37	O5-6
24	O21	O3-6	50	I11	I2-4	76	I41	I6-2	102	O38 DET RES	O5-7
25	O22	O3-7	51	I12	I2-5	77	I42	I6-3	103	O39 WDT	O5-8
26	O23	O3-8	52	I13	I2-6	78	I43	I6-4	104	DC GROUND	

C11S PIN ASSIGNMENT

PIN	FUNCTION NAME	FUNCTION PORT	PIN	FUNCTION NAME	FUNCTION PORT	PIN	FUNCTION NAME	FUNCTION PORT	PIN	FUNCTION NAME	FUNCTION PORT
1	O56	O8-1	11	I25	I4-2	21	I54	I7-7	31	DC GROUND	
2	O57	O8-2	12	I26	I4-3	22	I55	I7-8	32	NA	- - -
3	O58	O8-3	13	I27	I4-4	23	I56	I8-1	33	NA	- - -
4	O59	O8-4	14	DC GROUND		24	I57	I8-2	34	NA	- - -
5	O60	O8-5	15	I48	I7-1	25	I58	I8-3	35	NA	- - -
6	O61	O8-6	16	I49	I7-2	26	I59	I8-4	36	NA	- - -
7	O62	O8-7	17	I50	I7-3	27	I60	I8-5	37	DC GROUND	
8	O63	O8-8	18	I51	I7-4	28	I61	I8-6			
9	DC GROUND		19	I52	I7-5	29	I62	I8-7			
10	I24	I4-1	20	I53	I7-6	30	I63	I8-8			

m.c:	MODEL 2070-2A FIELD I/O MODULE C1 & C11 CONNECTORS
Rev Date 2-11-04	9-7-9
FEBRUARY 20, 2004	

Figure 11
Field I/O Module, C1 & C11 Connectors

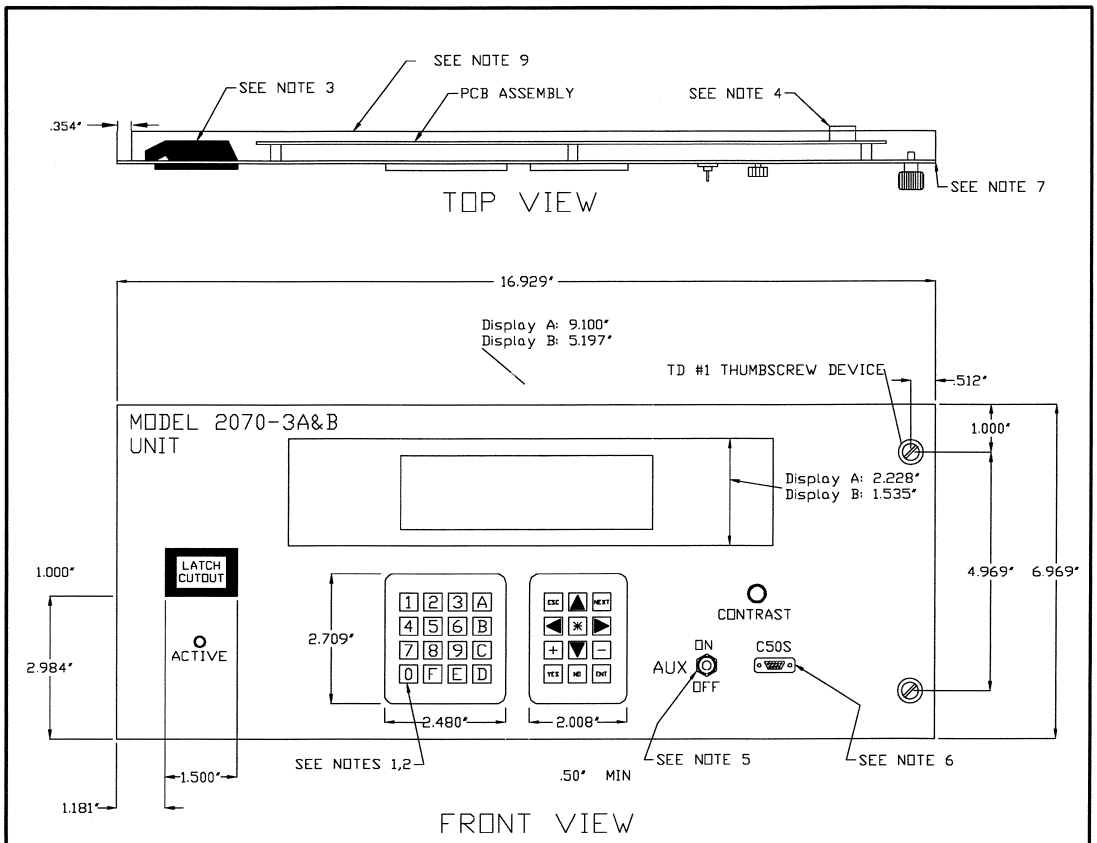

NOTES (THIS DETAIL)

1. Key size shall be .300" X .300"
2. Key center to center spacing shall be .500".
3. Slide latch shall be a SOUTHCO flush style A3-40-625-12 (OR EQUAL).
4. 40 contact FP harness pin header connector. It shall be compatible to the FP harness in type and pin assignments. Center of the FP harness header shall be vertically positioned 3.543 +/- .197" as measured from the top of the FPA.
5. Two position CONTROL switch mounted vertically.
6. "C50S" connector shall be a DB-9 socket contact connector.
7. Front panel sheet metal thickness shall be .060 +/- .005"
8. All FPA devices shall be located as shown.
9. The FPA shall be provided with a continuous top and bottom .69" lip bent 90 degrees to the front plate and shall extend the full length of the FPA.

C50S CONNECTOR PINOUTS	
PIN	C50S FUNCTION
1	C50 ENABLE
2	SP4 RX
3	SP4 TX
4	NA
5	DC GROUND #1
6	NA
7	NA
8	NA
9	NA

C60P CONNECTOR PINOUTS	
PIN	FUNCTION
1	TO POWER B BOX
2	SP6 RX
3	SP6 TX
4	NA
5	DC GROUND #1
6	NA
7	CPU RESET
8	NA
9	CPU LED

TITLE:
MODEL 2070 - 3A&3B FRONT PANEL ASSEMBLY

Rev Date 2-11-04
FEBRUARY 20, 2004

9-7-10

Figure 12
Front Panel Assembly

MODEL 2070-3 AUX SWITCH CODES		
SWITCH POSITION	ASCII DATA (TEXT)	ASCII DATA (HEX)
ON	ESC O T	1B 4F 54
OFF	ESC O U	1B 4F 55

MODEL 2070-3 KEY CODES		
KEY	ASCII DATA (TEXT)	ASCII DATA (HEX)
0	0	30
1	1	31
2	2	32
3	3	33
4	4	34
5	5	35
6	6	36
7	7	37
8	8	38
9	9	39
A	A	41
B	B	42
C	C	43
D	D	44
E	E	45
F	F	46
(UP ARROW)	ESC [A	1B 5B 41
(DOWN ARROW)	ESC [B	1B 5B 42
(RIGHT ARROW)	ESC [C	1B 5B 43
(LEFT ARROW)	ESC [D	1B 5B 44
ESC	ESC O S	1B 4F 53
NEXT	ESC O P	1B 4F 50
YES	ESC O Q	1B 4F 51
NO	ESC O R	1B 4F 52
*	*	2A
+	+	2B
-	-	2D
ENTER	CR	0D

TITLE: MODEL 2070-3 FRONT PANEL ASSEMBLY KEY CODES	
Rev Date 2-11-04	9-7-11
FEBRUARY 20, 2004	

Figure 13
Front Panel Assembly Key Codes

CONFIGURATION COMMAND CODES

ASCII REPRESENTATION	HEX VALUE	FUNCTION
HT	09	Move cursor to next tab stop
CR	0D	Position cursor at first position on current line
LF	0A	(Line Feed) Move cursor down one line
BS	08	(Backspace) Move cursor one position to the left and write space
ESC [Py ; Px f	1B 5B Py 3B Px 66	Position cursor at (Px, Py)
ESC [Pn C	1B 5B Pn 43	Position cursor Pn positions to right
ESC [Pn D	1B 5B Pn 44	Position cursor Pn positions to left
ESC [Pn A	1B 5B Pn 41	Position cursor Pn positions up
ESC [Pn B	1B 5B Pn 42	Position cursor Pn positions down
ESC [H	1B 5B 48	Home cursor (move to 1,1)
ESC [2 J	1B 5B 32 4A	Clear screen with spaces without moving cursor
ESC c	1B 63	Soft reset
ESC P P1 [Pn ; Pn...f	1B 50 P1 5B Pn 3B...Pn 66	Compose special character number Pn (1-8) at current cursor position
ESC [< Pn V	1B 5B 3C Pn 56	Display special character number Pn (1-8) at current cursor position
ESC [25 h	1B 5B 32 35 68	Turn Character blink on
ESC [25 l	1B 5B 32 35 6C	Turn character blink off
ESC [< 5 h	1B 5B 3C 35 68	Illuminate Backlight
ESC [< 5 l	1B 3B 3C 35 6C	Extinguish Backlight
ESC [33 h	1B 5B 33 33 68	Cursor blink on
ESC [33 l	1B 5B 33 33 6C	Cursor blink off
ESC [27 h	1B 5B 32 37 68	Reverse video on -Note 2
ESC [27 l	1B 5B 32 37 6C	Reverse video off -Note 2
ESC [24 h	1B 5B 32 34 68	Underline on -Note 2
ESC [24 l	1B 5B 32 34 6C	Underline off -Note 2
ESC [0 m	1B 5B 30 6D	All attributes off
ESC H	1B 48	Set tab stop at current cursor position
ESC [Pn g	1B 5B Pn 67	Clear tab stop Pn = 0,1,2 at cursor = 3 all tab stops
ESC [? 7 h	1B 5B 3F 37 68	Auto-wrap on
ESC [? 7 l	1B 5B 3F 37 6C	Auto-wrap off
ESC [? 8 h	1B 5B 3F 38 68	Auto-repeat on
ESC [? 8 l	1B 5B 3F 38 6C	Auto-repeat off
ESC [? 25 h	1B 5B 3F 32 35 68	Cursor on
ESC [? 25 l	1B 5B 3F 32 35 6C	Cursor off
ESC [< 47 h	1B 5B 3C 34 37 68	Auto-scroll on
ESC [< 47 l	1B 5B 3C 34 37 6C	Auto-scroll off
ESC [< Pn S	1B 5B 3C Pn 53	Set Backlight timeout value to Pn (0-63)
ESC [PU	1B 5B 50 55	String sent to CPU when FPA power up

NOTE: 1. Numerical values have one ASCII character per digit without leading zero.
2. Reverse Video & Underline NOT required for Front Panel Assembly Option 3A & B.
Commends shall be available for option 3C (C60).

INQUIRY COMMAND-RESPONSE CODES

COMMAND CPU Module to Front Panel Module		RESPONSE Front Panel Module to CPU Module		FUNCTION
ASCII Representation	HEX Value	ASCII Representation	HEX Value	
ESC [6 n	1B 5B 36 6E	ESC [Py; Px R	1B 5B Py 3B Px 52	Inquire Cursor Position
ESC [B n	1B 5B 42 6E	ESC [P1;P2;....P6 R	1B 5B P1 3B P2 3B....P6 52	Status Cursor Position P1: Auto-wrap (h,l) P2: Auto-scroll (h,l) P3: Auto-repeat (h,l) P4: Backlight (h,l) P5: Backlight timeout P6: AUX Switch (h,l)
ESC [A n	1B 5B 41 6E	ESC [P1 R	1B 5B P1 52	P1: AUX Switch (h,l)

TITLE: MODEL 2070-3 FRONT PANEL ASSEMBLY KEY CODES	
Rev Date 2-11-04	9-7-12
FEBRUARY 20, 2004	

Figure 14
Front Panel Assembly Key Codes

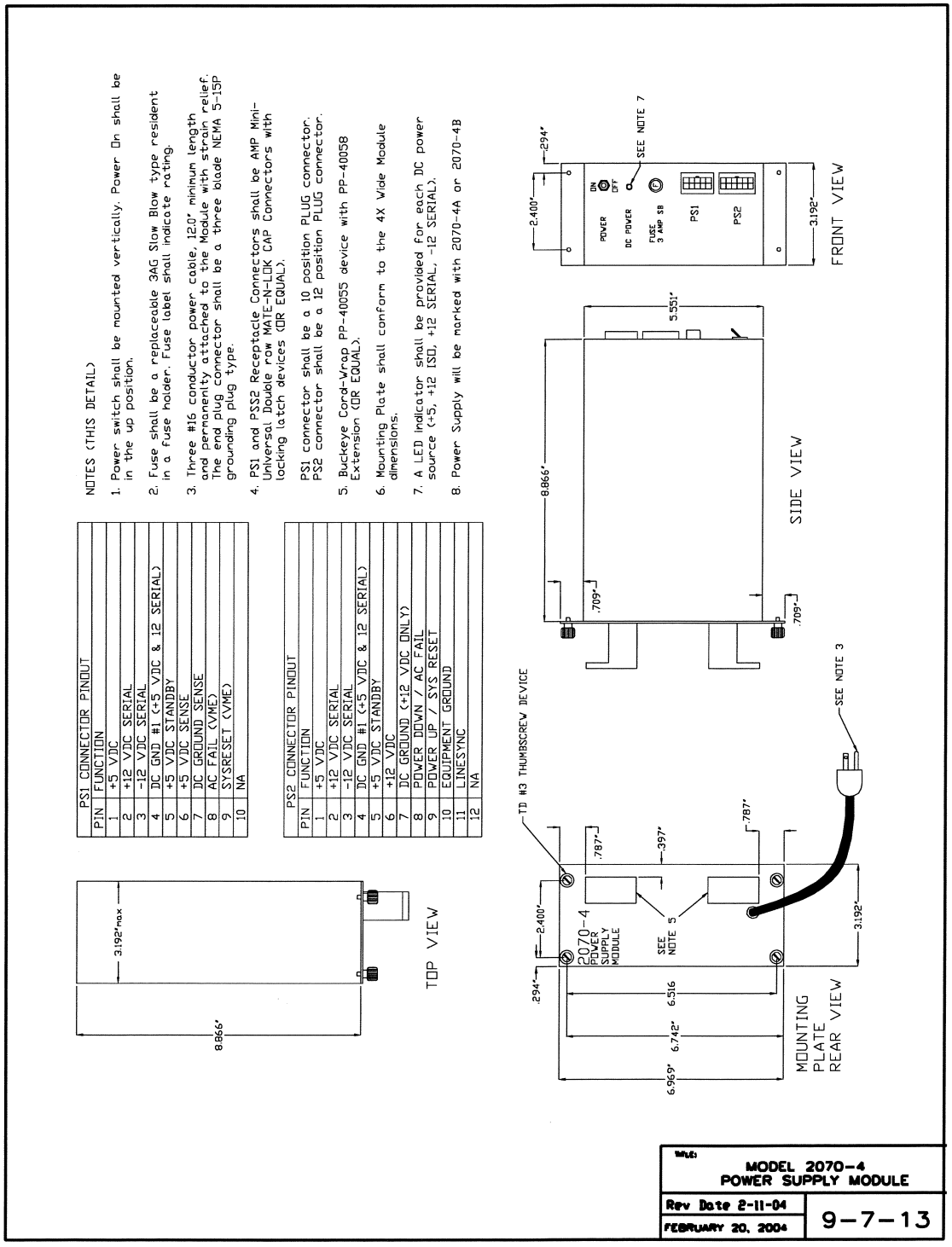
NOTES (THIS DETAIL)
1. Power switch shall be mounted vertically. Power On shall be in the up position.
2. Fuse shall be a replaceable 3AG Slow Blow type resident in a fuse holder. Fuse label shall indicate rating.
3. Three #16 conductor power cable, 12.0" minimum length and permanently attached to the Module with strain relief. The end plug connector shall be a three blade NEMA 5-15P grounding plug type.
4. PS1 and PS2 Receptacle Connectors shall be AMP Mini-Universal Double row MATE-N-LOK CAP Connectors with locking latch devices (OR EQUAL).
PS1 connector shall be a 10 position PLUG connector.
PS2 connector shall be a 12 position PLUG connector.
5. Buckeye Cord-Wrap PP-40055 device with PP-40058 Extension (OR EQUAL).
6. Mounting Plate shall conform to the 4X Wide Module dimensions.
7. A LED indicator shall be provided for each DC power source (+5, +12 ISO, +12 SERIAL, -12 SERIAL).
8. Power Supply will be marked with 2070-4A or 2070-4B
PS1 CONNECTOR PINOUT
PIN FUNCTION
1 +5 VDC
2 +12 VDC SERIAL
3 -12 VDC SERIAL
4 DC GND #1 (+5 VDC & 12 SERIAL)
5 +5 VDC STANDBY
6 +5 VDC SENSE
7 DC GROUND SENSE
8 AC FAIL (VME)
9 SYSRESET (VME)
10 NA
PS2 CONNECTOR PINOUT
PIN FUNCTION
1 +5 VDC
2 +12 VDC SERIAL
3 -12 VDC SERIAL
4 DC GND #1 (+5 VDC & 12 SERIAL)
5 +5 VDC STANDBY
6 +12 VDC
7 DC GROUND (+12 VDC ONLY)
8 POWER DOWN / AC FAIL
9 POWER UP / SYS RESET
10 EQUIPMENT GROUND
11 LINESYNC
12 NA
3.192" max
8.866"
TOP VIEW
.294"
2.400"
POWER
ON
OFF
DC POWER
FUSE
3 AMP SB
PS1
PS2
SEE NOTE 7
3.192"
FRONT VIEW
5.551"
8.866"
.709"
.709"
SIDE VIEW
TD #3 THUMBSCREW DEVICE
.787"
.397"
.787"
SEE NOTE 3
2.400"
2070-4
POWER
SUPPLY
MODULE
SEE
NOTE 5
3.192"
.294"
6.516
6.742"
6.969"
MOUNTING
PLATE
REAR VIEW
MODEL 2070-4
POWER SUPPLY MODULE
Rev Date 2-11-04
FEBRUARY 20, 2004
9-7-13

Figure 15
Power Supply Module

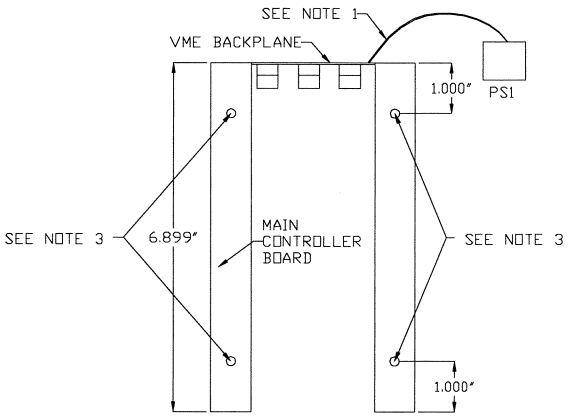

TOP VIEW

PS1 CONNECTOR PIN ASSIGNMENT	
PIN	FUNCTION
1	+5 VDC
2	+12 VDC SERIAL
3	-12 VDC SERIAL
4	DC GND #1 (+5 VDC & 12 SERIAL)
5	+5 VDC STANDBY
6	+5 VDC SENSE
7	DC GROUND SENSE
8	AC FAIL (VME)
9	SYSRESET (VME)
10	NA

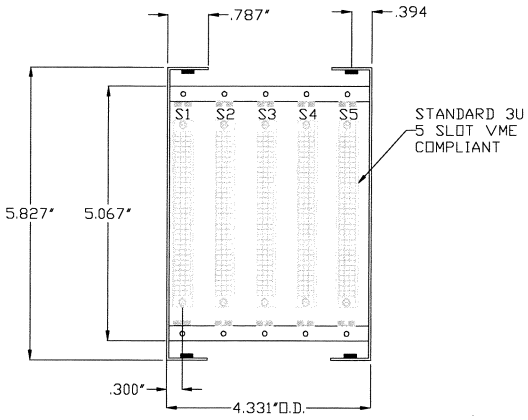

FRONT VIEW

NOTES (THIS DETAIL)

1. PS1 Harness interfaces between the Model 2070-4 Power Supply Module and the 2070-5 VME Cage Assembly. The harness shall be permanently attached to the Cage Assembly by solder, FASTON or Power Bugs. The Harness wiring shall be 8 #18 conductors for power and 2 #22 conductors for others.

2. The plate shall cover the open area & attach to the Chassis Backplane mounting surface via screws meeting the Chapter 1 external screw requirements. The screws shall mate with the PEM nuts as specified in the Model 2070 Chassis Top View Detail.

3. G-32 PEM Self-clinching Miniature Fasteners (OR EQUAL) shall be used for mounting holes to match the 6-32 screws on the top and bottom of the Model 2070 chassis.

TITLE: MODEL 2070-5 VME CAGE ASSEMBLY	
Rev Date 2-11-04	9-7-14
FEBRUARY 20, 2004	

Figure 16
VME Cage Assembly

2.08 TYPE 2070 PERIPHERAL EQUIPMENT

A. General Notes.

1. The 2070-6x and 2070-7x modules must provide circuitry to disable its Channel 2 and EIA-232 control lines (TX, RX, RTS, CTS, and DCD) when a ground true state is present at Connector A1, Pin B21 (C50 Enable). The disable lines must be pulled up on this module.

2. Line drivers/receivers must be socket mounted or surface mounted.

3. Isolation circuitry must be opto- or capacitive-coupled isolation technologies. Each module's circuit must be capable of reliably passing a minimum of 1.0 megabits per second.

4. The Comm modules must be "Hot" swappable without damage to circuitry or operations.

B. Type 2070-6 A & B Async/ Modem Serial Comm Modules

1. Power Requirements. A fused isolated +5 VDC with a minimum of 100 milliamperes power supply must be provided for external use.

   Option – Bourns MF – MSMD020 PTC (Positive Temperature Coefficient) Resettable Fuse, or approved equal, allowed.

2. Logic Switches. Two LOGIC switches per circuit must be provided (faceplate mounted).

   a. One logic switch must be used to vertically switch between Half-Duplex (Down) and Full-Duplex (Up). In Half-Duplex mode, the Transmit connections must be used for both Receive and Transmit.

   b. A MODEM Enable switch must be provided such that when in the UP Position must enable MODEM and disable MODEM in the DOWN Position.

3. Circuitry. Two circuits, designated CIRCUIT #1 and CIRCUIT #2, must be provided. Both circuit functions must be identical, except for their Serial Communications Port and external connector (CIRCUIT #1 to SP1 [or SP3] and C2S Connector and CIRCUIT #2 to SP2 [or SP4] and C20S Connector). The Circuits must convert the 2070 UNIT Motherboard SP EIA-485 signals to/from board TTL level signals, isolate and drive the converted EIA-232 Signals interfacing with their associated MODEM and external connector.

   a. Modem Requirements. Each CIRCUIT must have a MODEM with the following requirements:

(1) Data Rate: Baud modulation of 300 to 1200 for Module 2070-6A and 0 to 9600 for Module 2070-6B.

(2) Modulation: Phase coherent frequency shift keying (FSK).

(3) Data Format: Asynchronous, serial by bit.

(4) Line & Signal Requirements: Type 3002 voice-grade, unconditioned Tone Carrier Frequencies (Transmit and Receive):2070-6A - 1.2 KHz MARK and 2.2 KHz SPACE, +/-1% tolerance. 2070-6B - 11.2 KHz MARK and 17.6 KHz SPACE, +/-1% tolerance. The operating band must be (half power, -3 dB) between 1.0 KHz & 2.4 KHz for 2070-6A and 9.9 KHz & 18.9 KHz for 2070-6B.

(5) Transmitting Output Signal Level: 0, -2, -4, -6, and -8 dB (at 1.7 KHz for 2070-6A & 14.7 KHz for 2070-6B) continuous or switch selectable.

(6) Receiver Input Sensitivity: 0 to -40 dB.

(7) Receiver Bandpass Filter: Must meet the error rate requirement specified below and provide 20 dB/octave, minimum active attenuation for all frequencies outside the operating band.

(8) Clear-to-Send (CTS) Delay: 11 +/-3 milliseconds.

(9) Receive Line Signal Detect Time: 8 +/-2 milliseconds mark frequency.

(10) Receive Line Squelch: 6.5 (+/-1) milliseconds, 0 milliseconds (OUT).

(11) Soft Carrier Turn Off Time: 10 +/-2 milliseconds (0.9 kilohertz for 2070-6A and 7.8 kilohertz for 2070-6B). When the RTS is unasserted, the carrier must turn off or go to soft carrier frequency.

(12) Modem Recovery Time: Capable of receiving data within 22 milliseconds after completion of transmission.

(13) Error Rate: Must not exceed 1 bit in 100 kilobits, with a signal-to-noise ratio of 16 dB measured with flat-weight over a 300 to 3,000 Hertz band.

(14) Transmit Noise: Less than -50 dB across 600-ohms resistive load within the frequency spectrum of 300 to 3,000 Hertz at maximum output.

(15) Modem interface: EIA-232 Standards.

4. Control Switch. A CONTROL switch must be provided on the module front panel to turn ON (Up) / OFF (Down) all module power.

C. Type 2070-7A & 7B Async Serial Comm Module

1. Circuitry. Two circuits, designated CIRCUIT #1 and CIRCUIT #2, must be provided. Their functions are identical, except for the CPU Serial Communications Port and external connector (CIRCUIT #1 to SP1 [or SP3] and Connector C21S and CIRCUIT #2 to SP2 [or SP4] and Connector C22S).

2. 2070-7A. Each circuit must convert its EIA-485 signal lines (RX, TX, RTS, CTS and DCD) to / from board TTL Level Signals; isolate both signal and ground; and drive / receive external EIA-232 devices via C21 / C22 Connectors. Connectors must be DB-9S type.

3. 2070-7B. Each circuit EIA -485 signal lines, (RX, TX, TXC (I), TXC (O) and RXC) and associated signal ground must be board terminated to matching drivers/receivers; isolated both signal and ground, and drive/receiver external EIA-485 devices via C21/C22 Connectors. Connectors must be DB-15S type.

4. Indicators. Each circuit signal TX and RX line must have an LED Indicator mounted on the front plate and labeled to function.

D. Details.

Table of Contents

Type 2070-6	-	Async/Modem Serial Comm Module	Figure17
Type 2070-7	-	Serial Comm Module	Figure18

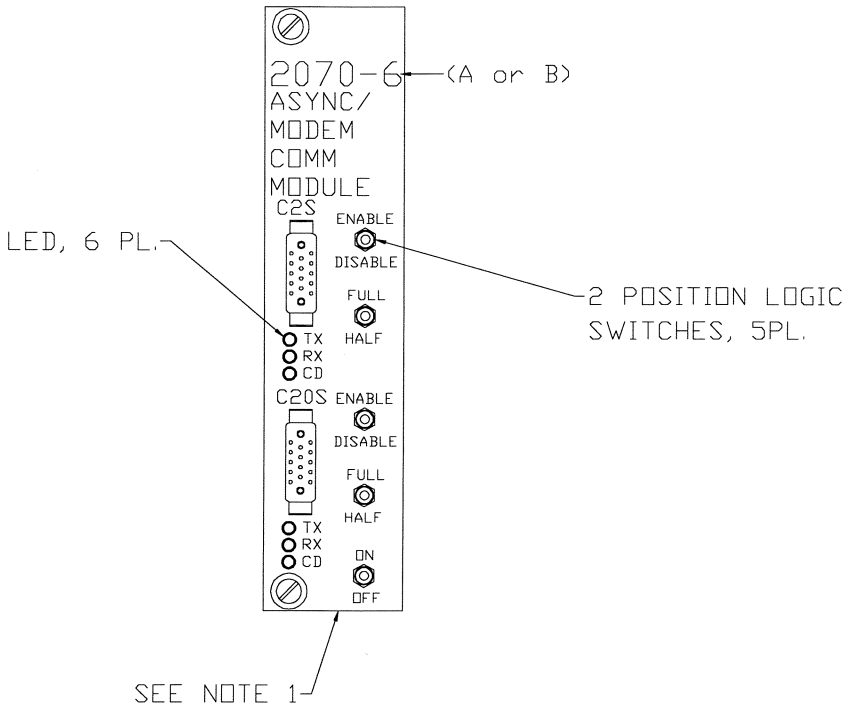

C2 & C20 CONNECTOR PINOUT			
PIN	FUNCTION	PIN	FUNCTION
A	AUDIO IN	J	RTS
B	AUDIO IN	K	DATA IN
C	AUDIO OUT	L	DATA OUT
D	ISO +5 VDC	M	CTS
E	AUDIO OUT	N	ISO DC GND
F	NA	P	NA
H	CD	R	NA

NOTES (THIS DETAIL)

1. 2X Faceplate
(See 2070 System
PCB Module, Detail 9-7-6).

2. Connectors C2S & C20S shall be mounted on the front plate and shall be M14 AMP with Spring Latch supports or equal.

TITLE: MODEL 2070-6A, 6B ASYNC/MODEM SERIAL COMM MODULE	
Rev Date 2-11-04	10-5-1
FEBRUARY 20, 2004	

Figure 17
Async/Modem Serial Comm Module

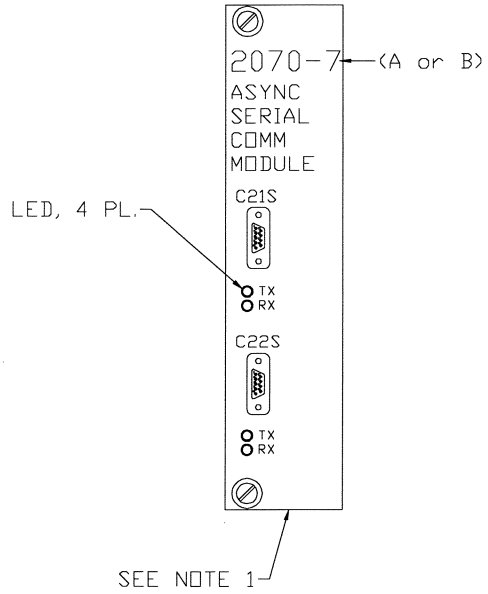

2070-7A (DB-9S)	
C21 & C22 CONNECTOR PINOUT	
PIN	FUNCTION
1	DCD
2	RXD
3	TXD
4	NA
5	ISO DC GND
6	NA
7	RTS
8	CTS
9	NA

2070-7B (DB-15S)			
C21 & C22 CONNECTOR PINOUT			
PIN	FUNCTION	PIN	FUNCTION
1	TX DATA +	9	TX DATA -
2	ISO DC GND	10	ISO DC GND
3	TX CLOCK +	11	TX CLOCK -
4	ISO DC GND	12	ISO DC GND
5	RX DATA +	13	RX DATA -
6	ISO DC GND	14	ISO DC GND
7	RX CLOCK +	15	RX CLOCK -
8	NA		

NOTES (THIS DETAIL)

1. 2X Faceplate (See 2070 System PCB Module, Detail 9-7-6).

2. Connectors 21 & 22 are DB 9S for Module 7A & DB 15S for Module 7B.

TITLE: MODEL 2070-7A, 7B ASYNC / SYNC SERIAL COMM MODULE	
Rev Date 2-11-04	10-5-2
FEBRUARY 20, 2004	

Figure 18
Serial Comm Module

2.09 NEMA MODULE

A. Type 2070N Controller Unit.

General. This section covers two versions of Type 2070 / NEMA Standard Controller Units. The versions associate with NEMA TS1 and NEMA TS2 Type 1 Standards as described in 3. General Requirements B.

1. Serial Port 5 Frame Address. The Serial Port 5 Frame Address for 2070-2N and 2070-8 must be "20".

B. 2070-2N Field I/O Module.

1. Interfaces. The 2070-2N Field I/O Module provides a TS2-1 compatible SDLC interface via 2070 Serial Port 3, AC Power to the 2070 Unit and Fault Monitor Logic Output via 2070 Serial Port 5 and Output Frame Byte 9 Bit 6 to the NEMA TS2 Cabinet Monitor Unit (CMU).

2. Type 2070-2N Module Requirements. The Module must meet the 2070–2A Module Requirements with the following exceptions:

   No C1, C11 and C12 Connectors on the front panel of the module
   No 64 inputs / 64 outputs requirements
   Serial Port 5 routed to the FCU MPU Device only
   Serial Port 3 must not have a disabling switch

3. Physical. The module must be a 4X type board / front panel with three connectors. The connectors are 10 Pin Connector A, a NEMA 5-15 Receptacle and a 15 Pin DB 15S C14 Connector.

4. Power. Incoming 2070 AC Power is derived from Connector A Pin C (AC+), Pin A (AC-), and Pin H (Equipment Ground). The power is directly routed to the NEMA 5-15 Receptacle. Connector A must intermate with a NEMA TS2 Type 1 (MS3106O-18-1S) cable.

5. Serial Port 3 Isolation. The module must isolate 2070 Serial Port 3 from the A3 Connector and reconvert the lines to external EIA 485 drivers/receivers that must be terminated at C14 Connector. The Port must be clocked at 153.6 kilobits per second.

6. FCU Output. An FCU output must drive an open collector transistor whose output must be routed to Connector A Pin F for use as a FAULT MONITOR Output. The transistor must be capable of sinking 200 milliamperes at 30 VDC.

7. Connector Pin Assignments. Connectors A and C14 pin out and functions are as follows:

Connector A

Pin	Function	Pin	Function	Pin	Function
A	AC Neutral	E	NA	I	NA
B	NA	F	Fault Monitor J	NA	
C	AC Line	G	DC#2 Ground		
D	NA	H	Equip Ground		

Connector C14S

Pin	Function	Pin	Function	Pin	Function
1	TX Data+	6	DC Ground	11	TX Clock -
2	DC Ground	7	RX Clock +	12	Equip Ground
3	TX Clock+	8	DC Ground	13	RX Data -
4	DC Ground	9	TX Data -	14	NA
5	RX Data+	10	NA	15	RX Clock –

8. TS2 BIU Control. Serial Port 3 must control the TS2 BIU Units using SDLC Protocol that meets the NEMA TS2 Type 1 Frame Command / Response Standards.

C. 2070-4N (A or B) POWER SUPPLY MODULE.

1. Requirements. The 2070-4N Power Supply Module supports the NEMA TS1 and TS2 Standards. The module is identical to the 2070-4N (A and B) Power Supply Requirements except for the following:

   a. The power cord must have a 15 in. +/- 1 in. length as measured from the panel to the plug tips.

   b. The AC Power Fail voltage must be 85VAC +/-2VAC.

c. The AC Power Restore voltage must be 90VAC +/-2VAC.

d. The 2070-4N (A or B) power supply must have proper marking Example "2070 4N (A or B)". A permanent sticker is an acceptable marking method.

D. Type 2070- 8 Field I/O Module.

1. Type 2070-8 Field I/O Module. The Module consists of the Module Chassis, Module Power Supply, FCU Controller, Parallel Input/Output Ports, Serial Communications Circuits and Module Connectors. The Module CHASSIS must be made of 0.06-inch minimum aluminum sheet and treated with clear chromate. All external screws, except where called out, to be countersunk and be Phillips flat head stainless steel. The matching nuts must be permanently captive on the mating surfaces.

2. Module Front Panel. The MODULE FRONT PANEL must be furnished with the following:

   a. ON/OFF POWER Switch mounted vertically with ON in the UP position.

   b. 2. LED DC Power Indicator. The indicator must indicate that the required + 5 VDC is within 5% and the +24 VDC is within 8%.

   c. Incoming VAC fuse protection.

   d. Two DB-25S COMM connectors labeled "EX1" & "EX2."

   e. Four NEMA Connectors A, B, C, & D.

3. Label. A permanent LABEL must be affixed to the Front Panel. The label must display the unit's serial number. The number must be permanent and easy to read.

4. Module Power Supply. A MODULE POWER SUPPLY must be provided and located on the right side of the module as viewed from the front. The supply must provide the necessary module internal circuitry DC power plus 2.0 Amperes minimum of +24 VDC for external logic, detector inputs, and output load control. The supply must meet the following requirements:

   a. Input Protection (See 10.E.3.).

   b. Power Supply Requirements (See 10.E.6.).

   c. DC Voltage Tolerances. DC Voltage tolerances must be +/-3%.

5. Incoming AC Power. The supplied INCOMING AC POWER must be derived from Connector A Pins "p" (AC+) and "U" (AC Neutral). External +24 VDC must be at Connector A, Pin "B" and Connector D Pin "NN." AC Power for the 2070 receptacle must be tapped off from the secondary side of the ON Switch / Fuse configuration.

6. Module PC Boards. A MODULE PC Boards must be mounted vertically.

7. Power Down, NRESET, and LINESYNC. Power Down, NRESET, and LINESYNC must be routed to the module via C12 Connector. The state of the module output ports at the time of Power Down transition to LOW State and until NRESET goes HIGH must be an open circuit.

8. Compliance with Type 2070-2 Field I/O Requirements. The Module must meet all requirements under 10.C. with the following exceptions:

   a. Parallel Ports. Parallel Ports, consisting of 118 Bits of Input and 102 bits of Output, must be provided. Specification for inputs applies except the voltage is +24 in lieu of +12 and Ground False, "0," exceeds 16.0 VDC. LINESYNC signal is incoming in differential logic.

   b. Serial Communication Circuitry. The module must interface with the 2070-2B Field I/O module via HAR 1 Harness meeting EIA-485 Requirements. All signal lines must be isolated. HAR 1 Harness must be 17 lines minimum with a C12P Connector on one end and soldered with strain relief on the other. In addition to the Controller interface, the EIA-485 Signal lines must be routed to EX1 Connector. All necessary driver/receiver and isolation circuitry must be provided.

9. EIA-232 Serial Port. An EIA-232 Serial Port must be provided with rate selection by jumper of 0.3, 1.2, 2.4, 4.8, 9.6, 19.2, & 38.4 kilobits per second asynchronous and be connected at EX1 Connector.

10. HAR 2 Harness. A 22-line minimum HAR 2 Harness must be provided between EX2 Connector and Model 2070-6 Serial COMM Module in the Type 2070 UNIT. This provides two Modems or EIA-232 Interfaces with the 2070 UNIT and the outside world.

11. Fault and Voltage Monitor. FAULT and VOLTAGE MONITOR circuitry – NEMA TS1 Controller FAULT and VOLTAGE MONITOR functions (outputs to cabinet monitor) must be provided.

    a. Two 3-input OR gates must be provided. The gate 1 output must be connected to Connector A, Pin A (FAULT MONITOR) and gate 2 output must be connected to Connector A, Pin C. Any FALSE state input must cause a gate output FALSE (+24VDC) state.

    b. The FCU Port 10, Bit 7 output must normally change its state every 100 milliseconds. A MODULE Watchdog (WDT) circuit must monitor the output. No state change for 2 +/-0.1 seconds must cause the circuit output to generate a FALSE (+24 VDC) output (input to gates 1 and 2). Should the FCU begin changing state, the WDT output must return to TRUE (0 VDC) state.

c. The module must have a +5 VDC monitoring circuit that monitors the module's +5 VDC (+/-0.25). If the voltage exceeds the limits, the circuit output must generate a FALSE output (input to gates 1 and 2). Normal operation must return the output state to TRUE state.

d. The FCU microprocessor output must be assigned to FAULT Monitor (input to gate 1) and another output must be assigned to VOLTAGE Monitor (input to gate 2).

e. CPU Port 5 SET OUTPUT COMMAND Message OUTPUTs O78 and O79 must be assigned to FAULT (O78) and VOLTAGE (O79). The bit logic state "1" must be FCU output FALSE.

f. CPU / FCU operation at POWER UP must be as follows:

(1) FCU Comm Loss Flag set. FAULT and VOLTAGE MONITOR outputs set to FALSE state.

(2) CPU REQUEST MODULE STATUS COMMAND Message with "E" bit set is sent to FCU to clear Comm Loss Flag and responds to CPU with "E" bit reset.

(3) Before the Comm Loss timer expires, the SET OUTPUT COMMAND data must be sent. In that data, the 078 and 079 logically set to "0" will cause the FCU microprocessor port pins assigned for FM and VM outputs to go to their TRUE state. At this point, the signal outputs defined in the message will be permitted at the output connectors. Any number of other messages may be sent between the MODULE STATUS COMMAND and SET OUTPUTS COMMAND.

(4) If the above message sequence is not followed, Comm Loss Flag must be set (or remain) and VM & FM must retain the FALSE output state.

(5) Performs items 2 & 3 above User Software.

g. A CPU / FCU Communications Loss during normal operation must cause all outputs to go blank (FALSE state) and must set the Comm Loss Flag. FM and VM outputs must be in FALSE state.

E. Details.

Table of Contents

MODEL 2070N1	-	Front View	Figure19
MODEL 2070N1	-	Side View	Figure20
MODEL 2070N1	-	Isometric View	Figure21

MODEL 2070N1	-	2070-8 Field I/O Module, Connectors A & B	Figure22
MODEL 2070N1	-	2070-8 Field I/O Module, Connectors C & D	Figure23
MODEL 2070N1	-	2070-8 Field I/O Module, EX1 & EX2 Connectors	Figure24

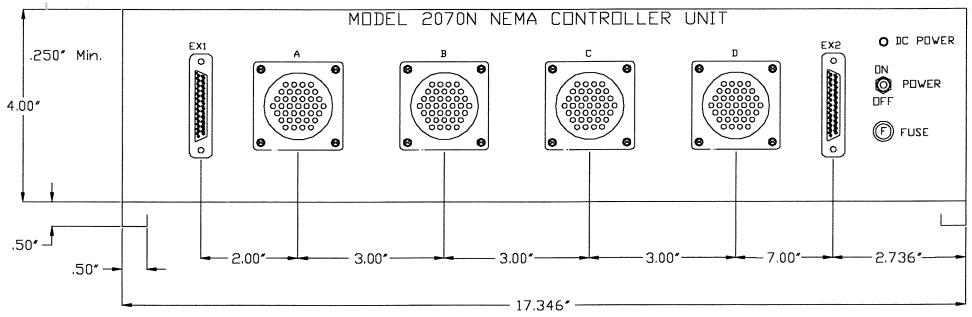

NOTES (THIS DETAIL)

1. The Model 2070 Controller Unit is shown only for refernce.

2. The bottom supports shall be double flanged.

3. A = Connector A (MS-3112-22-55P Type)
   B = Connector B (MS-3112-22-55S Type)
   C = Connector C (MS-3112-24-61S Type)
   D = Connector D (MS-3112-24-61P Type)
   EX1 = Connector EX1 (DB-25S Type)
   EX2 = Connector EX2 (DB-25S Type)

4. 2.286 mm wide spacers shall be provided between the inside wall of the 2070-8 Module and the 2070 unit (each side).

TITLE: 2070 (V or L) N1 CONTROLLER UNIT FRONT VIEW	
Rev Date 2-11-04	11-5-1
FEBRUARY 20, 2004	

Figure 19
Front View

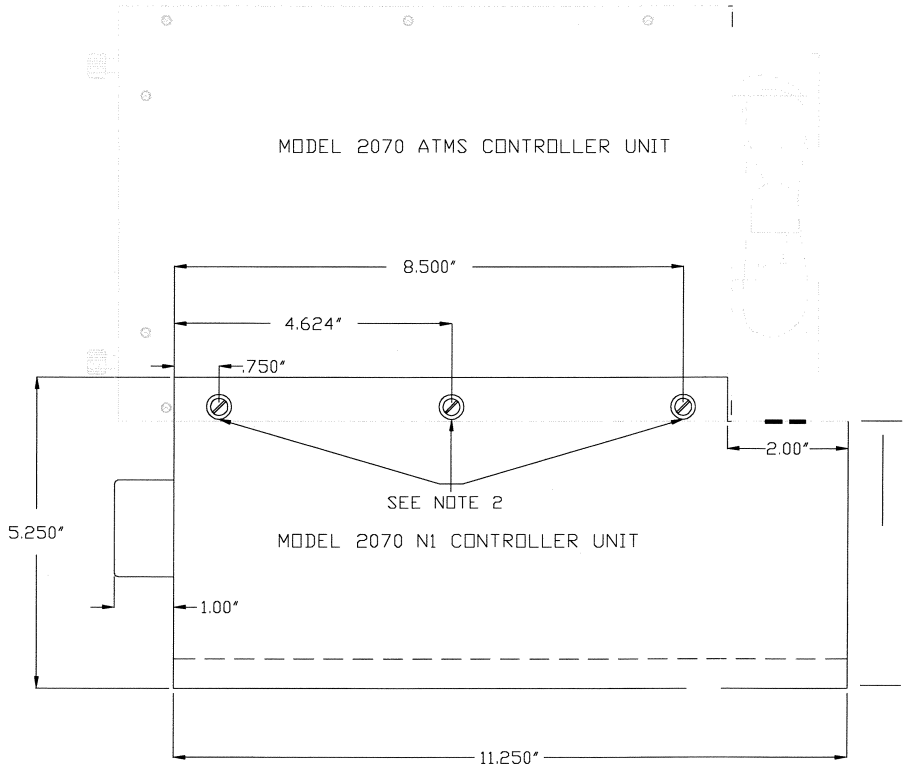

NOTES (THIS DETAIL)

1. The Model 2070 Controller Unit is shown only for reference.
2. TDS #3 Thumbscrew Devices. Module shall provide mating nuts permanently mounted on the module

TITLE: 2070 N1 CONTROLLER UNIT SIDE VIEW	
Rev Date 2-11-04	11-5-2
FEBRUARY 20, 2004	

Figure 20
Side View

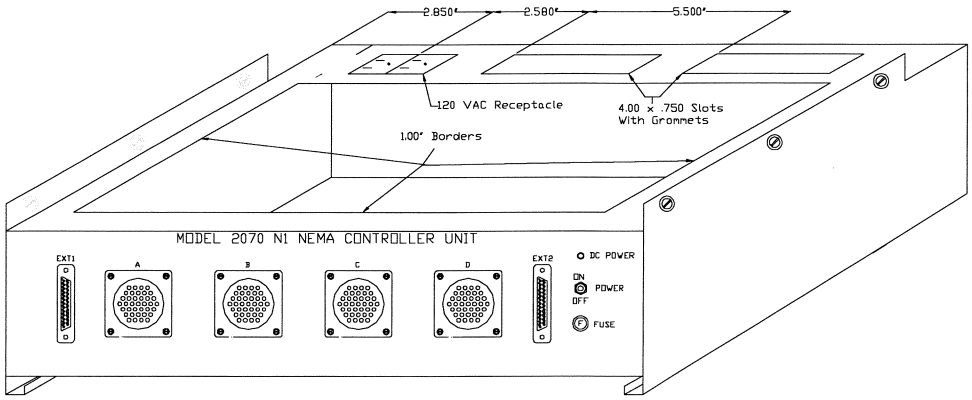

NOTES (THIS DETAIL)

1. The module housing bottom shall be slot vented. The top shall be open.

TITLE: 2070 N1 CONTROLLER UNIT ISO VIEW	
Rev Date 2-11-04	11-5-3
FEBRUARY 20, 2004	

Figure 21
Isometric View

CONFIGURATION COMMAND CODES

ASCII REPRESENTATION	HEX VALUE	FUNCTION
HT	09	Move cursor to next tab stop
CR	0D	Position cursor at first position on current line
LF	0A	(Line Feed) Move cursor down one line
BS	08	(Backspace) Move cursor one position to the left and write space
ESC [Py ; Px f	1B 5B Py 3B Px 66	Position cursor at (Px, Py)
ESC [Pn C	1B 5B Pn 43	Position cursor Pn positions to right
ESC [Pn D	1B 5B Pn 44	Position cursor Pn positions to left
ESC [Pn A	1B 5B Pn 41	Position cursor Pn positions up
ESC [Pn B	1B 5B Pn 42	Position cursor Pn positions down
ESC [H	1B 5B 48	Home cursor (move to 1,1)
ESC [2 J	1B 5B 32 4A	Clear screen with spaces without moving cursor
ESC c	1B 63	Soft reset
ESC P P1 [Pn ; Pn...f	1B 50 P1 5B Pn 3B...Pn 66	Compose special character number Pn (1-8) at current cursor position
ESC [< Pn V	1B 5B 3C Pn 56	Display special character number Pn (1-8) at current cursor position
ESC [25 h	1B 5B 32 35 68	Turn Character blink on
ESC [25 l	1B 5B 32 35 6C	Turn character blink off
ESC [< 5 h	1B 5B 3C 35 68	Illuminate Backlight
ESC [< 5 l	1B 3B 3C 35 6C	Extinguish Backlight
ESC [33 h	1B 5B 33 33 68	Cursor blink on
ESC [33 l	1B 5B 33 33 6C	Cursor blink off
ESC [27 h	1B 5B 32 37 68	Reverse video on -Note 2
ESC [27 l	1B 5B 32 37 6C	Reverse video off -Note 2
ESC [24 h	1B 5B 32 34 68	Underline on -Note 2
ESC [24 l	1B 5B 32 34 6C	Underline off -Note 2
ESC [0 m	1B 5B 30 6D	All attributes off
ESC H	1B 48	Set tab stop at current cursor position
ESC [Pn g	1B 5B Pn 67	Clear tab stop Pn = 0,1,2 at cursor = 3 all tab stops
ESC [? 7 h	1B 5B 3F 37 68	Auto-wrap on
ESC [? 7 l	1B 5B 3F 37 6C	Auto-wrap off
ESC [? 8 h	1B 5B 3F 38 68	Auto-repeat on
ESC [? 8 l	1B 5B 3F 38 6C	Auto-repeat off
ESC [? 25 h	1B 5B 3F 32 35 68	Cursor on
ESC [? 25 l	1B 5B 3F 32 35 6C	Cursor off
ESC [< 47 h	1B 5B 3C 34 37 68	Auto-scroll on
ESC [< 47 l	1B 5B 3C 34 37 6C	Auto-scroll off
ESC [< Pn S	1B 5B 3C Pn 53	Set Backlight timeout value to Pn (0-63)
ESC [PU	1B 5B 50 55	String sent to CPU when FPA power up

NOTE: 1. Numerical values have one ASCII character per digit without leading zero.
2. Reverse Video & Underline NOT required for Front Panel Assembly Option 3A & B.
Commends shall be available for option 3C (C60).

INQUIRY COMMAND-RESPONSE CODES

COMMAND CPU Module to Front Panel Module		RESPONSE Front Panel Module to CPU Module		FUNCTION
ASCII Representation	HEX Value	ASCII Representation	HEX Value	
ESC [6 n	1B 5B 36 6E	ESC [Py; Px R	1B 5B Py 3B Px 52	Inquire Cursor Position
ESC [B n	1B 5B 42 6E	ESC [P1;P2;....P6 R	1B 5B P1 3B P2 3B...P6 52	Status Cursor Position P1: Auto-wrap (h,l) P2: Auto-scroll (h,l) P3: Auto-repeat (h,l) P4: Backlight (h,l) P5: Backlight timeout P6: AUX Switch (h,l)
ESC [A n	1B 5B 41 6E	ESC [P1 R	1B 5B P1 52	P1: AUX Switch (h,l)

TITLE: 2070-8 FIELD I/O MODULE CONNECTORS A & B	
Rev Date 2-11-04	11-5-4
FEBRUARY 20, 2004	

Figure 22
2070-8 Field I/O Module, Connectors A & B

	CONNECTOR C			CONNECTOR D		
PIN	FUNCTION	I/O	PORT-BIT	FUNCTION	I/O	PORT-BIT
A	Coded Status Bit A (Ring 2)	Out	12-4	Detector 9	In	10-1
B	Coded Status Bit B (Ring 2)	Out	12-5	Detector 10	In	10-2
C	Phase 8 Don't Walk	Out	4-8	Detector 11	In	10-3
D	Phase 8 Red	Out	1-8	Detector 12	In	10-4
E	Phase 7 Yellow	Out	2-7	Detector 13	In	10-5
F	Phase 7 Red	Out	1-7	Detector 14	In	10-6
G	Phase 6 Red	Out	1-6	Detector 15	In	10-7
H	Phase 5 Red	Out	1-5	Detector 16	In	10-8
J	Phase 5 Yellow	Out	2-5	Detector 17	In	11-1
K	Phase 5 Ped Clear	Out	5-5	Detector 18	In	11-2
L	Phase 5 Don't Walk	Out	4-5	Detector 19	In	11-3
M	Phase 5 Next	Out	8-5	Detector 20	In	11-4
N	Phase 5 On	Out	9-5	Detector 21	In	11-5
P	Phase 5 Vehicle Detector	In	1-5	Detector 22	In	11-6
R	Phase 5 Pedestrian Detector	In	2-5	Detector 23	In	11-7
S	Phase 6 Vehicle Detector	In	1-6	Detector 24	In	11-8
T	Phase 6 Pedestrian Detector	In	2-6	Clock Update	In	12-1
U	Phase 7 Pedestrian Detector	In	2-7	Hardware Control	In	12-2
V	Phase 7 Vehicle Detector	In	1-7	Cycle Advance	In	12-3
W	Phase 8 Pedestrian Detector	In	2-8	Max 3 Selection	In	12-4
X	Phase 8 Hold	In	3-8	Max 4 Selection	In	12-5
Y	Force Off (Ring 2)	In	7-1	Free	In	12-6
Z	Stop Timing (Ring 2)	In	7-2	Not Assigned	In	12-7
a	Inhibit Max Timing (Ring 2)	In	7-3	Not Assigned	In	12-8
b	Test Input C	In	9-3	Alarm 1	In	13-1
c	Coded Status Bit C (Ring 2)	Out	12-6	Alarm 2	In	13-2
d	Phase 8 Walk	Out	6-8	Alarm 3	In	13-3
e	Phase 8 Yellow	Out	2-8	Alarm 4	In	13-4
f	Phase 7 Green	Out	3-7	Alarm 5	In	13-5
g	Phase 6 Green	Out	3-6	Flash In	In	13-6
h	Phase 6 Yellow	Out	2-6	Conflict Monitor Status	In	13-7
i	Phase 5 Green	Out	3-5	Door Ajar	In	13-8
j	Phase 5 Walk	Out	6-5	Special Function 1	In	14-1
k	Phase 5 Check	Out	7-5	Special Function 2	In	14-2
m	Phase 5 Hold	In	3-5	Special Function 3	In	14-3
n	Phase 5 Omit	In	5-5	Special Function 4	In	14-4
p	Phase 6 Hold	In	3-6	Special Function 5	In	14-5
q	Phase 6 Omit	In	5-6	Special Function 6	In	14-6
r	Phase 7 Omit	In	5-7	Special Function 7	In	14-7
s	Phase 8 Omit	In	5-8	Special Function 8	In	14-8
t	Phase 8 Vehicle Detector	In	1-8	Preempt 1 In	In	15-1
u	Red Rest Mode (Ring 2)	In	7-4	Preempt 2 In	In	15-2
v	Omit All Red (Ring 2)	In	7-7	Preempt 3 In	In	15-3
w	Phase 8 Ped Clear	Out	5-8	Preempt 4 In	In	15-4
x	Phase 8 Green	Out	3-8	Preempt 5 In	In	15-5
y	Phase 7 Don't Walk	Out	4-7	Preempt 6 In	In	15-6
z	Phase 6 Don't Walk	Out	4-6	Alarm 1 Out	Out	12-7
AA	Phase 6 Ped Clear	Out	5-6	Alarm 2 Out	Out	12-8
BB	Phase 6 Check	Out	7-6	Special Function 1 Out	Out	13-1
CC	Phase 6 On	Out	9-6	Special Function 2 Out	Out	13-2
DD	Phase 6 Next	Out	8-6	Special Function 3 Out	Out	13-3
EE	Phase 7 Hold	In	3-7	Special Function 4 Out	Out	13-4
FF	Phase 8 Check	Out	7-8	Special Function 5 Out	Out	13-5
GG	Phase 8 On	Out	9-8	Special Function 6 Out	Out	13-6
HH	Phase 8 Next	Out	8-8	Special Function 7 Out	Out	13-7
JJ	Phase 7 Walk	Out	6-7	Special Function 8 Out	Out	13-8
KK	Phase 7 Ped Clear	Out	5-7	Not Assigned	---	---
LL	Phase 6 Walk	Out	6-6	Detector Reset	Out	11-8
MM	Phase 7 Check	Out	7-7	Not Assigned	---	---
NN	Phase 7 On	Out	9-7	+24 VDC	---	---
PP	Phase 7 Next	Out	8-7	2070N DC Gnd	---	---

TITLE: **2070-8 FIELD I/O MODULE CONNECTORS C & D**

Rev Date 2-11-04

FEBRUARY 20, 2004

11-5-5

Figure 23
2070-8 Field I/O Module, Connectors C & D

EX1 CONNECTOR PINOUT	
PIN	FUNCTION
1	EQ GND
2	TXD FCU
3	RXD FCU
4	RTS FCU
5	CTS FCU
6	NA
7	2070-8 DC GND
8	DCD FCU
9	2070-8 DC GND
10	485 TX Data+
11	485 TX Data-
12	485 TX Clock+
13	485 TX Clock-
14	2070-8 DC GND
15	485 RX Data+
16	485 RX Data-
17	2070-8 DC GND
18	485 RX Clock+
19	485 RX Clock-
20	NA
21	NA
22	NA
23	NA
24	NA
25	NA

EX2 CONNECTOR PINOUT	
PIN	FUNCTION
1	EQ GND
2	TXD 1
3	RXD 1
4	RTS 1
5	CTS 1
6	NA
7	DC GND #1
8	DCD 1
9	AUDIO IN 1
10	AUDIO IN 1
11	AUDIO OUT 1
12	AUDIO OUT 1
13	NA
14	EQ GND
15	TXD 2
16	RXD 2
17	RTS 2
18	CTS 2
19	NA
20	DC GND #1
21	DCD 2
22	AUDIO IN 2
23	AUDIO IN 2
24	AUDIO OUT 2
25	AUDIO OUT 2

TITLE: 2070-8 FIELD I/O MODULE EX1 & EX2 CONNECTORS	
Rev Date 2-11-04	11-5-6
FEBRUARY 20, 2004	

Figure 24
2070-8 Field I/O Module, EX1 & EX2 Connectors

2.10 GLOSSARY

A. Terms and Abbreviations. Wherever the following terms or abbreviations are used, the intent and meaning is interpreted as follows:

- A Ampere
- AC Alternating Current
- AC+ 120 Volts AC, 60 hertz ungrounded power source
- AC- 120 Volts AC, 60 hertz grounded return to the power source
- DEPARTMENT The DEPARTMENT director, acting either directly or through properly authorized agents, such agents acting within the scope of the particular duties delegated to them.
- ANSI American National Standard Institute
- ASCII American Standard Code for Information Interchange
- Assembly A complete machine, structure or unit of a machine that was manufactured by fitting together parts and/or modules
- ASTM American Society for Testing and Materials
- AWG American Wire Gage
- C Celsius
- C Language The ANSI C Programming Language
- Cabinet An outdoor enclosure generally housing the controller unit and associated equipment
- Certificate of Compliance A certificate signed by the manufacturer of the material or the manufacturer of assembled materials stating that the materials involved comply in all respects with the requirements of the specifications

- Channel An information path from a discrete input to a discrete output.

- Component Any electrical or electronic device

- Contractor The person or persons, Manufacturer, firm, partnership, corporation, vendor or combination thereof, who have entered into a contract with the DEPARTMENT, as party of the second part or legal representative

- Controller Unit That portion of the controller assembly devoted to the operational control of the logic decisions programmed into the assembly

- CPU Central Processing Unit

- CTS Clear To Send

- DAT Program The DEPARTMENT's Diagnostic and Acceptance Test Program

- dB Decibel

- dBa Decibels above reference noise, adjusted

- DC Direct Current

- DCD Data Carrier Detect (Receive Line Signal Detector)

- DIN Deutsche Industrie Norm

- DRAM Dynamic random access memory. Random access means that the processor can access any part of the memory or data storage space directly rather than having to proceed sequentially from some starting place. DRAM is dynamic in that it needs to have its storage cells refreshed or given a new electronic charge every few milliseconds.

- EG Equipment Ground

- EIA Electronic Industries Association

- EMI Electro Magnetic Interference
- EPROM Ultraviolet Erasable, Programmable, Read Only Memory Device
- EEPROM Electrically Erasable, Programmable, Read Only Memory Device
- Equal Connectors: comply with physical dimensions, contact material, plating and method of connection. Devices: comply to function, pin out, electrical and operating parameter requirements, access times and interface parameters of the specified device
- ETL Electrical Testing Laboratories, Inc.
- Firmware A computer program or software stored permanently in PROM, EPROM, ROM or semi-permanently in EEPROM
- FLASH A +5 VDC powered IC Memory Device with nonvolatile, electrically erasable, programmable, 100K read/write minimum cycles and fast access time features
- FPA Front Panel Assembly
- HEX Hexadecimal
- Hz Hertz
- IC Integrated Circuit
- I.D. Identification
- IEEE Institute of Electrical and Electronics Engineers
- ISO Isolated
- Jumper A means of connecting/disconnecting two or more conductive by soldering/desoldering a conductive wire or by PCB post jumper
- KB Kilobytes

- Keyed Means by which like connectors can be physically altered to prevent improper insertion.
- Laboratory The established laboratory of the DEPARTMENT or other laboratories authorized by the DEPARTMENT to test materials involved in the contract
- LCD Liquid Crystal Display
- LED Light Emitting Diode
- LOGIC Negative Logic Convention (Ground True) State
- LSB Least Significant Byte
- lsb Least Significant Bit
- MB megabyte
- MSB Most Significant Byte
- msb Most Significant Bit
- m Milli
- MCU/MPU/ IMP Micro Controller Unit, Microprocessor Unit, or Integrated Multiprotocol Processor
- MIL Military Specifications
- MODEM Modulation/Demodulation Unit
- Module A functional unit that plugs into an assembly
- Motherboard A printed circuit connector interface board with no active or passive components
- MOS Metal-Oxide Semiconductor

- MOV Metal-Oxide Varistor
- MS Military Standards
- N Newton: SI unit of force
- N.C. Normally closed contact
- N.O. Normally open contact
- NA Presently Not Assigned. Cannot be used by the Manufacturer for other purposes
- NEMA National Electrical Manufacturer's Association
- NETA National Electrical Testing Association, Inc.
- n nano
- NLSB Next Least Significant Byte
- nlsb Next Least Significant Bit
- NMSB Next Most Significant Byte
- nmsb Next Most Significant Bit
- PCB Printed Circuit Board
- PDA Power Distribution Assembly
- PLA/PAL Programmable Array Logic Device
- Power Failure A Power Failure is said to have occurred when the incoming line voltage falls below 92 +/- 2 VAC for 50 milliseconds. See Power Conditions.

- Power Restoration Power is said to be restored when the incoming line voltage equals or exceeds 97 +/- 2 VAC for 50 milliseconds. See Power Conditions.

- Power Conditions 16.7 ms (one 60 Hertz cycle) reaction period is allowed to be included in the 50 milliseconds timing or added to (67 milliseconds duration). The hysteresis between power failure and power restoration voltage settings must be a min. of 5 VAC with a threshold drift of no more than 0.2 VAC.

- ppm Parts per million

- PWM Pulse Width Modulation

- RAM Random Access Memory

- RF Radio Frequency

- RMS Root-Mean-Square

- ROM Read Only Memory Device

- RTS Request to Send

- R/W Controller Unit Read/Write Control Line

- RxD Received Data

- SCI Serial Communications Interface

- SDLC Synchronous Data Link Control

- S Logic State

- s second

- Second Sourced Produced by more than one Manufacturer

- SRAM Static Random Access Memory Device

- SW Switch
- TB Terminal Block
- TOD Time Of Day Clock
- Triac Silicon-Controlled Rectifier which controls power bilaterally in an AC switching circuit
- TTL Transistor-Transistor Logic
- Thumb Screw Device (TSD) A retractable screw fastener with projecting stainless steel screw, spring and natural aluminum knob finish. (TSD No.2 must be flat black.)

  TSD No.1 - 8-32 SOUTHCO #47-62-301-20 or equal.
  TSD No.2 - 8-32 SOUTHCO #47-62-301-60 or equal.
  TSD No.3 - M3 SOUTHCO #47-82-101-10 or equal.

- TxD Transmitted Data
- u Micro
- UL Underwriter's Laboratories, Inc.
- VAC Voltage Alternating Current (root mean square)
- VDC Voltage Direct Current
- VME Versa Module Eurocard, VMEbus Standard IEEE P1014/D1.2
- x Number Value
- XX Manufacturer's Option
- WDT Watchdog Timer: A monitoring circuit, external to the device watched, which senses an Output Line from the device and reacts

SECTION 16750

ACCESSIBLE PEDESTRIAN PUSH BUTTON STATION

PART 1 GENERAL

1.01 SECTION INCLUDES

A. Accessible Pedestrian Push Button Station Assembly with control unit and mounting hardware. The assembly shall be the 2-Wire Navigator Push Button Station and 2-Wire Navigator Central Control Unit (CCU) as manufactured by Polara Engineering, Inc.

1.02 MEASUREMENT AND PAYMENT

A. Unit Prices.

1. Accessible Pedestrian Push Button Stations will be measured by each push button assembly and necessary central control unit.

2. Payment for the work performed and materials furnished in accordance with this item will be paid for at the unit price bid for "Accessible Pedestrian Push Button Station." The price shall be full compensation for furnishing, assembling, installing, made fully operational and testing the unit, as well as all mounting attachments, labor, tools, equipment, and incidentals necessary to complete the work.

PART 2 PRODUCTS

2.01 MATERIALS

Provide new materials that comply with the details shown on the plans and the requirements of this specification.

2.02 ACCESSIBLE PEDESTRIAN PUSH BUTTON STATION

A. The assembly and manufacturing process for all internal electronic components shall be adequately supported to withstand mechanical shock and vibration from high winds and other sources.

B. Weather-proof speaker protected by vandal proof screen.

C. Central Control Unit (CCU) for the pushbutton detector unit that resides in the Traffic Signal Controller Cabinet capable of controlling a minimum of 12 units using no more

than one pair of wires for each phase. The CCU must be capable of controlling up to 4 phases and all inputs and outputs shall have Transient Voltage Protection.

1. Pedestrian Walk / Don't Walk inputs: optically isolated 80-150 Volts AC/DC 5 mA maximum.

2. General purpose outputs and pedestrian outputs: optically isolated 36 Volts AC/DC peak 0.3A solid state fused contact closure.

3. Fault Output: normally open and closed relay contacts 125 Volts AC/DC 1A maximum.

4. A, B, C, D PBS power outputs: nominal 22 Volts DC, short circuit protected – auto recovering.

5. General Purpose Inputs: 10-36 Volts AC/DC peak 10 mA maximum, optically isolated.

6. Environmental: operating and storage -30°F (-34°C) to 165°F (74°C) 0-100% humidity non-condensing.

D. Each unit will contain a vibrating tactile arrow to provide a tactile representation of the status of the WALK indication. The arrow shall contrast with the background.

E. Confirmation of button push via latching LED, sound, and vibrotactile bounce.

F. Vibrating tactile arrow shall be able to be adjusted for directional indication.

G. Pedestrian push buttons shall be at least 2 inches in diameter or width, contrast visually with the housing, and require 5 lbf (poundforce) maximum force.

H. The pushbutton assembly shall be die-cast aluminum, powder coated from aluminum alloy 319 or equivalent.

I. The unit shall be fabricated free of voids, pits, dents, molding sand and excessive foundry grinding marks. All design radii shall be smooth and intact. Exterior surface finish shall be smooth and cosmetically acceptable by being free of molding fins, cracks and other exterior blemishes.

J. Assembly color shall be yellow.

K. Mounting bolts shall be brass or stainless steel.

L. Push button unit shall have an actuation indication which will activate upon depression of the push button. If actuation indication is a light then it shall remain on until the next walk cycle.

M. All push button assemblies shall be mounted to the poles by drilling and tapping. Stainless Steel ¼ - 20 bolts shall be used to mount the push button assemblies to poles. Self-tapping screws shall not be used. Stainless steel strapping shall not be allowed.

N. Attached crossing signs shall be 9" x 15" R10-3e, as per the Texas Manual on Uniform Traffic Control Devices (TMUTCD).

O. The back panel portion of the push button assembly shall be designed to accommodate pole diameters from 4" to 14".

2.03 AUDIBLE INDICATIONS

A. A push button locator tone shall sound at each push button.

B. Locator tones should be audible 6 to 12 feet from the push button or to the building line, whichever is less.

C. Locator tones shall have a duration of 0.15 seconds or less, and shall repeat at 1-second intervals.

D. Automatic volume adjustments in response to ambient traffic sound level shall be provided up to a maximum of 89 dB. Locator tone and verbal messages shall be no more than 5 dB louder than ambient sound.

E. All sounds must automatically adjust to ambient noise levels over a 60 dB range.

F. Standard locating tone during Don't Walk (and clearance if desired) and cuckoo, chirp, or standard voice message during walk.

G. Standard locating tone, custom sound, or verbal countdown during PED clearance.

H. Most sounds can have minimum and maximum volume independently set.

I. Extended button push can turn on, boost, volumes, and/or mute all sounds except those on activated crosswalk.

J. The tone or voice volume, measured at 36 inches from the APS, should be 2dB minimum and 5 dB maximum above the ambient noise.

K. Cuckoo - 1250 Hz and 1000 Hz.

L. Chirp - 2700 Hz and 1700 Hz.

M. Substituting Cuckoo and Chirp sounds with "walk" and "don't walk" audible sounds is optional.

N. Push button locator tone different from cuckoo or chirp.

O. Extended button press which can be used to request a louder WALK signal and locator tone for subsequent clearance interval.

P. System shall allow for independent volume control for locate tones, clearance, and walk tones.

Q. All sounds shall be synchronized to reduce sound clutter.

R. Custom message and sound options definable by customer include:

1. Custom locating tone
2. Informational Message
3. Custom walk sounds/message
4. Custom clearance sound
5. Multiple languages (up to three, selectable by user)
6. Street name in Braille on the sign

2.04 ENVIRONMENTAL REQUIREMENTS

A. The Accessible Pedestrian Push Button Station Assembly (pole unit and central control unit) shall be rated for use in the ambient operating temperature range of -40°C to +65°C (-40°F to +150°F).

B. Push button shall be rated for minimum of 20 million operations with >2 lb. actuation force.

2.05 ELECTRICAL REQUIREMENTS

The Accessible Pedestrian Push Button Station Assembly shall operate over a

voltage range of 95 to 130 VAC, 60 Hz. E. TRANSIENT

2.06 VOLTAGE PROTECTION

The on-board circuitry of a module shall include voltage surge protection, to withstand high-repetition noise transients and low-repetition high-energy transients.

2.07 INPUT PROTECTION

At the point of entry to the module for each input, provide two 0.5-Ohm, 10-watt wire-wound power resistors with 0.2 micro Henries inductance (one on the AC+ Line & one on the AC- Line). Provide one 20 Joule surge arrestor between AC+ to AC-. A 0.68 microfarad capacitor must be placed between AC+ & AC- (between the resistor & arrestor).

2.01 POWER FAILURES

Whenever there is a loss of power to the "Walk" or "Don't Walk" for a period greater than 2.0 seconds, the sound shall be deactivated.

PART 3 WARRANTY

3.01 A minimum guarantee for both materials and workmanship shall be provided for the products bid as specified. The guarantee (warranty) period shall begin the day the City officially accepts the item. Any guarantee work is to be completed within 15 days after receipt of notice of material deficiencies.

A. WARRANTY AND GUARANTEES

1. All material, workmanship and labor furnished shall be covered by Supplier(s)/Manufacturer(s) guarantee and/or warranty for a minimum period of thirty-six (36) months. Warranty period shall begin the day the item is received by the City of Houston, either as new order or warranty repair. Bidder shall also be required to have resources to complete any required warranty work within fifteen (15) days after receipt of found defective item. The City of Houston's preference is for all non-warranty service to be charged a singular flat-rate. Successful bidder will include flat rate repair cost, if available in bid document for all non-warranty covered repairs. If flat rate repair charge is not available, then Supplier(s)/Manufacturer(s) will provide current hourly labor rate, along with any associated minimum charges that may apply.

2. Successful bidder shall bear all expenses connected with return of any material which the City deems necessary to return for adjustments during guarantee

period. Said work shall be done by manufacturer's representative at no cost to the City.

3. The City of Houston may perform random sample testing on all shipments. Random sample testing will be completed within 45 days after delivery. The number of modules tested shall be determined by the quantity of each shipment. The Traffic Operations Division shall determine the sampling parameters to be used for the random testing. Acceptance or rejection of the shipment shall conform to ANSI/ASQC Z1.4 for random sampled shipments.

4. The City of Houston reserves the right to withhold payments which may be due, should it be discovered that material does not meet specifications and/or claims of bidder.

5. Supplier(s)/Manufacturer(s) shall make all engineering data, diagrams, software changes or improvements, which increases performance of equipment purchased under this bid, available to the City of Houston at no additional cost during guarantee period.

6. Supplier(s)/Manufacturer(s) shall have field engineers or technicians available on request to assure satisfactory initial operation, and to consult with City's Traffic Engineer, or his representative, on any special circuitry that may be required in certain applications.

END OF SECTION

SECTION 02316

STRUCTURAL EXCAVATING AND BACKFILLING

Harris County
Flood Control District

PART 1 – GENERAL

1.1 SUMMARY

A. Section includes requirements for excavating and backfilling under, above and adjacent to structures, including riprap and buried riprap.

1.2 MEASUREMENT AND PAYMENT

A. No separate measurement and payment is made under this Section. Include the cost for the work under this Section in the related item listed on the Unit Price Schedule.
B. Measurement and payment is as noted on the Unit Price Schedule.
C. Refer to Section 01270 – Measurement and Payment for unit price procedures.

1.3 REFERENCES

A. ASTM D 698 – Laboratory Compaction Characteristics of Soils Using Standard Effort (12,400 ft-lbf/ft^3 (600kN-m/m^3)).

1.4 CONSTRUCTION TESTS AND INSPECTION

A. Refer to Section 01457 – Construction Tests and Inspection.

PART 2 – PRODUCTS

2.1 FILL MATERIAL

A. Refer to Section 02314 – Fill Material.

2.2 CEMENT STABILIZED SAND

A. Refer to Section 02321 – Cement Stabilized Sand.

2.3 CONCRETE BACKFILL

A. Refer to Section 03310 – Concrete, Non-structural.

2.4 FLOWABLE FILL

A. Refer to Section 02322 – Flowable Fill.

2.5 SUBGRADE STABILIZATION

A. Provide stabilized subgrade or stabilized soil backfill as indicated in the Specifications, as noted on the Unit Price Schedule or as noted in the Plans.

2.6 SAND OR GRAVEL BACKFILL

A. Provide sand or gravel backfill in accordance with the material and gradation requirements as noted on the Plans.

2.7 GRANULAR FILL

A. Refer to Section 02378 – Riprap and Granular Fill.

2.8 TOPSOIL

A. Refer to Section 02911 – Topsoil.

PART 3 – EXECUTION

3.1 SITE PREPARATION, INCLUDING REMOVING VEGETATION

A. Refer to Section 02200 – Site Preparation and Restoration and Section 02233 – Clearing and Grubbing.
B. Remove grass and other vegetative cover from areas to be excavated or to receive fill.

3.2 EXCAVATION

A. Determine the size, shape and dimensions of the excavation necessary to accomplish the Work within the project site. This includes selecting the means, methods and techniques of excavation and other related matters. Extend the excavation a sufficient distance from walls and edges of the structure to allow for placing and removing of forms and trench safety systems, for inspection and installing ancillary items. Complete excavations within the following tolerances:
   1. Perform structural excavation to the grade necessary to provide the minimum design thickness as shown on the Plans and to allow the top to be no higher than the design grade.
   2. Cut vertical planes for footing excavations to neat lines with a tolerance of minus 1/2 inch to plus 3 inches.

3. Excavate to the elevations shown on the Plans forming a relatively level undisturbed subgrade surface free of mud or other soft material. Excavation extending deeper than the Plan elevations is considered unauthorized excavation unless it meets the criteria defined in Paragraph 3.2.B. Fill unauthorized excessive excavation as directed by the Engineer at no cost to the District.

B. Notify the Engineer when the bottom of the excavation, at the elevation shown, is not within the foundation bearing material shown on the Plans or is unsuitable for foundation bearing. Do not excavate to deeper levels without authorization from the Engineer. Remove pockets of soft or otherwise unstable soils and replace with satisfactory material as directed by the Engineer compacted to match adjacent stable soil or as directed by the Engineer.

C. Protect open excavation from rainfall, freezing or excessive drying to maintain the foundation subgrade or backfill in a satisfactory condition. Subgrade soils which become soft, loose or otherwise unsatisfactory for support of the foundation resulting from inadequate excavation protection, dewatering or other construction methods, shall be removed and replaced with satisfactory material, as directed by the Engineer, at no cost to the District.

3.3 SHEETING, SHORING AND BRACING

A. Perform sheeting, shoring and bracing of excavations as required to properly and safely complete the work as shown on the Plans. Install sheeting, shoring and bracing to prevent the excavation from extending beyond specified or indicated limits and to protect adjacent structures or improvements.

B. Protect workmen and the public with sheeting, shoring and bracing that is in strict conformity with Section 02269 – Trench Safety System.

C. Care shall be taken to prevent voids during the installation, use and removal of sheeting. Immediately fill voids with satisfactory material as directed by the Engineer and compact.

D. Remove sheeting, shoring and bracing after completion of the structure unless approval has been granted by the Engineer, in writing, to leave members in place.

3.4 CARE AND CONTROL OF WATER

A. Refer to Section 02241 – Care and Control of Water.

3.5 PLACING BACKFILL

A. Place backfill in 8 inch maximum layers (loose measure) to the elevation of surrounding natural ground or to the lines and grades shown on Plans.

B. Place backfill as promptly as practicable after completion of the structure or

portion of a structure.

C. Placing operations shall be performed in such a manner as not to impair safety or serviceability of the structure. Do not place backfill against concrete walls or similar structures until all affected concrete has been in place at least 14 days and attained the minimum design compressive strength, unless otherwise shown on the Plans.

D. Do not backfill where the top of walls are supported by slabs or intermediate walls until the slab or intermediate walls have been placed and cured. Do not backfill until the minimum curing requirement and minimum design compressive strength have been met unless otherwise shown on the Plans.

E. Prevent any wedging action of backfill against the structure. Step cut (bench) the slopes bounding the excavation, as required, to prevent wedging.

F. Use sand or gravel backfill for backfilling behind sheet pile walls, wingwalls, retaining walls, rectangular concrete channel walls or other retaining structures. Backfill in the zone for a distance of 3 feet from the wall to 1.5 foot below the top of the wall, unless shown otherwise on the Plans. Backfill the 1.5 foot zone with 1 foot of clay soil conforming to Part 2 of this Section and backfill the top 6 inches with topsoil conforming to Section 02911 – Topsoil.

G. Excavate 3 feet or less around abutment backwalls, inlets and manholes and fill with cement stabilized sand, unless shown otherwise on the Plans.

3.6 COMPACTING BACKFILL

A. Mechanically compact soil backfill as follows:

1. Compact to not less than 95 percent of maximum standard dry density (ASTM D 698) within plus or minus 3 percent of the optimum moisture content.
2. Where approved for use by the Engineer, fat clay (CH) soil shall be mechanically compacted to not less than 95 percent or more than 98 percent of maximum standard dry density (ASTM D 698) at or within plus 3 percent of the optimum moisture content.
3. Compact sand and/or gravel backfill behind retaining walls including the top 1 foot of backfill material utilizing hand operated tamping or vibratory plate type of compaction equipment. Compact to no less than 90 percent of maximum standard dry density (ASTM D 698) within plus or minus 3 percent of the optimum moisture content.
4. Compact cement stabilized sand to produce a minimum unconfined compressive strength of 200 psi in 48 hours when compacted to at least 95 percent maximum standard dry density (ASTM D 698) and in accordance with Section 02321 – Cement Stabilized Sand.
5. Install flowable fill according to Section 02322 – Flowable Fill.
6. Compact stabilized subgrade or stabilized soil backfill in accordance with the Plans and Specifications.

7. Consolidate concrete backfill in accordance with Section 03310 – Concrete.

B. Prevent damage to structures caused by backfilling or other construction operations.

3.7 MATERIAL DISPOSAL

A. Refer to Section 02120 – Material Disposal.

END OF SECTION

Harris County
Flood Control District

SECTION 02321

CEMENT STABILIZED SAND

PART 1 – GENERAL

1.1 SUMMARY

A. Section includes requirements for supplying and installing cement stabilized sand for backfill, bedding and free formed structures.

1.2 MEASUREMENT AND PAYMENT

A. Where there is not a separate item listed on the Unit Price Schedule for work in this Section, no separate measurement and payment is made. Include cost for work under this Section in the related item listed on the Unit Price Schedule.
B. Measurement and payment is as noted on the Unit Price Schedule.
C. Refer to Section 01270 – Measurement and Payment for unit price procedures.

1.3 REFERENCES

A. ASTM C 40 – Organic Impurities in Fine Aggregates for Concrete.
B. ASTM C 94 – Ready-Mixed Concrete.
C. ASTM C 123 – Lightweight Pieces in Aggregate.
D. ASTM C 142 – Clay Lumps and Friable Particles in Aggregates.
E. ASTM C 150 – Portland Cement.
F. ASTM D 558 – Moisture-Density Relations of Soil-Cement-Mixtures.
G. ASTM D698 - Laboratory Compaction Characteristics of Soils Using Standard Effort (12,400 ft-lb/ft^3 (600kN-m/m^3)).
H. ASTM D 1633 – Compressive Strength of Molded Soil-Cement Cylinders.
I. ASTM D 2487 – Classification of Soils for Engineering Purposes (Unified Soil Classification System).
J. ASTM D 4318 – Liquid Limit, Plastic Limit and Plasticity Index of Soils.

1.4 SUBMITTALS

A. Refer to Section 01330 – Submittal Procedures.
B. Submit proposed design mix and test data for sand/cement mixture.
C. Submit supplier's batch ticket indicating cement content per cubic yard or per ton of product, batch date and time and weight of load to Engineer at time of delivery.

PART 2 – PRODUCTS

2.1 MATERIALS

A. Provide material conforming to:
   1. Cement – ASTM C 150, Type I.
   2. Sand – Clean, durable sand:
      a. ASTM D 2487, classified as SW, SP, SC or SM by the Unified Soils Classification System.
      b. Deleterious materials:
         (1) Clay lumps – ASTM C 142, less than 0.5 percent.
         (2) Lightweight pieces – ASTM C 123, less than 5.0 percent.
         (3) Organic impurities – ASTM C 40, color no darker than the standard color.
         (4) Plasticity index – ASTM D 4318, of 4 or less.
   3. Water – ASTM C 94.

2.2 MIX DESIGN

A. Use sand/cement mixture containing a minimum of 2 sacks of cement per cubic yard (1-1/2 sacks of cement per ton). Design sand/cement mixture to produce a minimum unconfined compressive strength of 200 psi in 48 hours when compacted to 95 percent maximum standard dry density in accordance with ASTM D 558. Perform molding, curing and compression testing in accordance with ASTM D 1633 – Method A.

2.3 MIXING MATERIALS

A. Add required amount of water and mix it thoroughly in pugmill-type mixer.
B. Stamp batch ticket at plant with time of loading. Material not placed and compacted within 4 hours after mixing will be considered nonconforming.

PART 3 – EXECUTION

3.1 EXCAVATING FOR FREE FORMED STRUCTURES

A. Refer to Section 02316 – Structural Excavating and Backfilling.

3.2 PLACEMENT

A. Place sand/cement mixture for free formed structures in 8-inch-thick loose layers and compact to not less than 95 percent maximum standard dry density (ASTM D 698) unless otherwise specified. The moisture content during compaction shall be on the dry side of optimum but sufficient for hydration.
B. Perform and complete compaction of sand/cement mixture within 4 hours after addition of water to mix at the plant.
C. Do not place or compact sand/cement mixture in standing or free water.

3.3 TESTING AND INSPECTION

A. Refer to Section 01457 – Construction Tests and Inspection.

END OF SECTION

Harris County
Flood Control District

SECTION 02364

FILTER DAMS

PART 1 – GENERAL

1.1 SUMMARY

A. Section includes requirements for furnishing, installing, maintaining and removing filter dams.

1.2 MEASUREMENT AND PAYMENT

A. Measurement and payment is as noted on the Unit Price Schedule.
B. Refer to Section 01270 – Measurement and Payment for unit price procedures.
C. Geotextile, excavation and disposal, granular fill and reinforcing wire will not be measured separately.
D. No separate payment shall be made for removal of accumulated sediment. Maintenance and removal and subsequent reinstallation, if required, of the filter dam are incidental to the cost of the filter dam.

1.3 REFERENCES

A. ASTM A 975 – Double-Twisted Hexagonal Mesh Gabions and Revet Mattresses (Metallic-Coated Steel Wire or Metallic-Coated Steel Wire With Poly(Vinyl Chloride) (PVC) Coating).

1.4 SUBMITTALS

A. Refer to Section 01330 – Submittal Procedures.
B. Submit catalog data and mill certificate for geotextile and catalog data for wire to be used.
C. Submit gradation for granular fill shown on the Plans.

PART 2 – PRODUCTS

2.1 GRANULAR FILL

A. Provide granular fill as noted on the Plans.
B. Refer to Section 02378 – Riprap and Granular Fill.

2.2 WIRE COATING

A. Style 1 – zinc coated prior to being double twisted into mesh in accordance with ASTM A 975.

2.3 WIRE MESH FOR REINFORCEMENT

A. Provide 20 gauge galvanized double-twisted hexagonal wire mesh and tie wires or as shown on the Plans.

2.4 CONNECTION WIRES AND STIFFENERS

A. Provide spiral binders, lacing wire and stiffeners made of wire having the same coating material and same wire size as the wire mesh for reinforcement.

2.5 GEOTEXTILE SEPARATION FABRIC

A. Provide a geotextile of woven or spunbond nonwoven fibers consisting of long-chain synthetic polymers composed of at least 95 percent by weight of polyolefins. Provide geotextile fabric equal to the following average roll values or as directed by the Engineer:
   1. Minimum average roll value.
      a. Elongation < 50 percent.
      b. Grab Strength ≥ 200 pounds.
      c. Puncture Strength ≥ 75 pounds.
      d. UV Stability (retained strength) ≥ 50 percent after 500 hours of exposure.
   2. Maximum average roll value.
      a. Apparent Opening Size (AOS) – 0.212 to 0.6 mm (#70 to #30 US sieve).

B. Refer to Section 02379 – Geotextiles for Erosion Control Systems for storage and handling precautions and requirements.

PART 3 – EXECUTION

3.1 INSTALLATION

A. Install in accordance with the Plans.

3.2 MAINTENANCE

A. Sediment Accumulation.
   1. Remove accumulated sediment as needed or when directed by the Engineer.
   2. Reshape the filter dam as needed or when directed by the Engineer.

3.3 REMOVAL

A. Maintain the filter dam, in place, throughout the duration of the Project. Remove when directed by the Engineer. Sod the exposed earth beneath the filter dam and areas damaged by the removal process in accordance with Section 02921 – Turf Establishment.

3.4 SEDIMENT DISPOSAL

A. Refer to Section 02120 – Material Disposal.

END OF SECTION

Harris County
Flood Control District

SECTION 02376

CONCRETE CHANNEL LINING AND CONCRETE INTERCEPTOR STRUCTURES

PART 1 – GENERAL

1.1 SUMMARY

A. Section includes requirements for constructing concrete channel lining and concrete interceptor structures.

1.2 MEASUREMENT AND PAYMENT

A. Measurement and payment is as noted on the Unit Price Schedule.
B. Refer to Section 01270 – Measurement and Payment for unit price procedures.
C. Toewalls, seal slab, grade beams, joint materials, weep holes, saw cutting and appurtenances will not be measured separately, but are incidental to surface measurement.

1.3 SUBMITTALS

A. Refer to Section 01330 – Submittals.
B. Refer to Section 03310 – Concrete.

PART 2 – PRODUCTS

2.1 CONCRETE

A. Refer to Section 03310 – Concrete.
B. Provide structural concrete for concrete channel lining and interceptor structures. Refer to Section 03310 – Concrete.
C. Provide non-structural concrete for the seal slab. Refer to Section 03310 – Concrete.

PART 3 – EXECUTION

3.1 EXCAVATION AND FILL

A. Excavate the Channel: Refer to Section 02316 – Structural Excavating and Backfilling.
B. Refer to Section 03310 – Concrete.

END OF SECTION

SECTION 02377

RECTANGULAR CONCRETE CHANNEL

Harris County
Flood Control District

PART 1 – GENERAL

1.1 SUMMARY

A. Section includes requirements for constructing rectangular concrete channels.

1.2 MEASUREMENT AND PAYMENT

A. Measurement and payment is as noted on the Unit Price Schedule.
B. Refer to Section 01270 – Measurement and Payment for unit price procedures.
C. Toewalls, seal slab, grade beams, joint materials, weep holes and appurtenances will not be measured separately, but are incidental to surface measurement.

PART 2 – PRODUCT

2.1 CONCRETE

A. Refer to Section 03310 – Concrete.

PART 3 – EXECUTION

3.1 INSTALLATION

A. Refer to Section 02316 – Structural Excavating and Backfilling.
B. Refer to Section 03310 – Concrete.
C. For concrete designed without retarding agents and placed in ambient temperatures above 50 degrees F., leave rectangular concrete channel wall forms in a minimum of 24 hours after the concrete is placed.
D. For concrete designed with retarding agents and/or placed in ambient temperatures below 50 degrees F., remove forms when approved by the Engineer.
E. Tolerances:
   1. Screed the concrete surface to be true within 1/4 inch in 10 feet.
   2. Plumb walls to within 1/8 inch from top to bottom.

END OF SECTION

Harris County
Flood Control District

SECTION 02378

RIPRAP AND GRANULAR FILL

PART 1 – GENERAL

1.1 SUMMARY

A. Section includes requirements for furnishing and installing riprap and granular fill and filling and burying riprap, when required.

1.2 MEASUREMENT AND PAYMENT

A. Where there is not a separate item listed on the Unit Price Schedule for work in this Section, no separate measurement and payment is made. Include cost for work under this Section in the related item listed on the Unit Price Schedule.
B. Measurement and payment is as noted on the Unit Price Schedule.
C. Refer to Section 01270 – Measurement and Payment for unit price procedures.
D. Excavation for riprap and buried riprap will not be measured separately, but is incidental to riprap surface measurement.
E. Riprap and granular fill used in toe walls, grade beams or termination trenches are incidental to surface measurement.
F. On-site topsoil will not be measured and paid separately, but is incidental to riprap surface measurement.
G. Imported topsoil will be paid for as noted on the Unit Price Schedule.

1.3 DELIVERY, STORAGE AND HANDLING

A. Keep the storage area clean, firm, smooth and well drained in order that the product can be placed with a minimum of foreign matter.
B. Stockpile and handle riprap and granular fill to minimize segregation of particle sizes either in the stockpile or while loading, hauling and handling.

PART 2 – PRODUCTS

2.1 RIPRAP

A. Provide riprap consisting of broken concrete or stone. Provide riprap that is dense, durable and hard material free from cracks, seams and other defects which would increase deterioration from handling and natural causes.
B. Shape and Dimensions.
   1. Provide riprap in cubic form, rather than elongated (flat) shapes.
   2. Provide riprap with a minimum thickness of 6 inches.

3. No more than 25 percent shall have a length greater than 2-1/2 times the width or thickness. No length shall exceed 3 times the width or thickness.

C. Do not provide spalls, fragments and chips exceeding 5 percent by weight. The dimension and shape limitations do not apply to this portion of the riprap.

D. Where broken concrete is used, cut exposed metal flush with the surface prior to placing the riprap.

E. Provide riprap conforming to the following tables:

TABLE 1

RIPRAP GRADATION NO. 1

Percent Lighter by Weight	Stone Weight Lbs. Lower Limit	Stone Weight Lbs. Upper Limit	Volume Cubic Ft (2) Lower Limit	Volume Cubic Ft (2) Upper Limit	Cubical Shape Ft (Each Side) Lower Limit	Cubical Shape Ft (Each Side) Upper Limit	Spherical Shape Ft (Dia.) Lower Limit	Spherical Shape Ft (Dia.) Upper Limit
100	180	265	1.20	1.77	1.06	1.21	1.31	1.50
50	80	110	0.53	0.73	0.81	0.90	1.01	1.12
15	40	60	0.27	0.40	0.64	0.74	0.80	0.91

Notes:

1. The theoretical cube and sphere size is presented for guidance only. Paragraph 2.1 shall control riprap shape and dimensions.
2. Volume is based on 150 pcf, unit weight.
3. Riprap Gradation No. 1 is to be used where an 18 inch thick riprap mat is noted on the Plans.

TABLE 2

RIPRAP GRADATION NO. 2

Percent Lighter by Weight	Stone Weight Lbs. Lower Limit	Stone Weight Lbs. Upper Limit	Volume Cubic Ft (2) Lower Limit	Volume Cubic Ft (2) Upper Limit	Cubical Shape Ft (Each Side) Lower Limit	Cubical Shape Ft (Each Side) Upper Limit	Spherical Shape Ft (Dia.) Lower Limit	Spherical Shape Ft (Dia.) Upper Limit
100	260	640	1.73	4.27	1.20	1.62	1.49	2.01
50	130	200	0.87	1.33	0.95	1.10	1.18	1.37
15	40	150	0.27	1.00	0.64	1.00	0.80	1.24

Notes:

1. The theoretical cube and sphere size is presented for guidance only. Paragraph 2.1 shall control riprap shape and dimensions.
2. Volume is based on 150 pcf, unit weight.
3. Riprap Gradation No. 2 is to be used where a 24 inch thick riprap mat is noted on the Plans.

2.2 GRANULAR FILL

A. Provide granular fill consisting of concrete or stone. Provide granular fill that is dense, durable and hard material.

B. Provide granular fill, as shown on the Plans or as directed by the Engineer, to the following dimensions:

1. Provide 3 inch to 5 inch granular fill with no material diameter less than 3 inches and no material diameter greater than 5 inches.

2. Provide 4 inch to 8 inch granular fill with no material diameter less than 4 inches and no material diameter greater than 8 inches.
3. Provide riprap Gradation No. 1 and Gradation No. 2 as shown on the Plans or as directed by the Engineer.

C. Do not provide spalls, fragments and chips exceeding 5 percent by weight.
D. Where broken concrete is used, cut exposed metal flush with the surface prior to placing granular fill.

2.3 GEOTEXTILE

A. Refer to Section 02379 – Geotextiles for Erosion Control Systems.

PART 3 – EXECUTION

3.1 GRADE PREPARATION

A. Refer to Section 02241 – Care and Control of Water.
B. Trim and dress the channel bottom and side slopes to proper lines and grade prior to placing riprap or granular fill. Where shown on the Plans, place geotextile in accordance with Section 02379 – Geotextiles for Erosion Control Systems.
C. The Engineer will inspect prepared section prior to placing geotextile, riprap or granular fill.

3.2 EXCAVATION AND FILL

A. Excavate the channel. Refer to Section 02315 – Excavating and Backfilling.
B. Excavate for riprap. Refer to Section 02316 – Structural Excavating and Backfilling.

3.3 RIPRAP OR GRANULAR FILL PLACEMENT

A. Place the riprap or granular fill to the slopes, lines and grades as shown on the Plans.
B. To establish a well-graded mass of riprap with minimal voids, fill voids between larger riprap blocks with spalls and smaller blocks of the largest feasible size to form a compact mass. Do not place spalls and small blocks in place of larger size riprap or granular fill.
C. Install riprap and granular fill mat to the thickness as shown on the Plans. Riprap shall have minimum mat thickness as shown on the gradation tables.
D. Place the riprap and granular fill to avoid displacement or damage to the prepared surface or geotextile and in a manner to avoid segregation of particle sizes.

E. Fill riprap voids and bury riprap a minimum of 6 inches with topsoil on side slopes as directed by the Engineer.

END OF SECTION

SECTION 02379

GEOTEXTILES FOR EROSION CONTROL SYSTEMS

Harris County Flood Control District

PART 1 – GENERAL

1.1 SUMMARY

A. Section includes the requirements for furnishing and installing geotextiles used for filter applications beneath erosion control systems.

1.2 MEASUREMENT AND PAYMENT

A. Where there is not a separate item listed on the Unit Price Schedule for work in this Section, no separate measurement and payment is made. Include cost for work under this Section in the related item listed on the Unit Price Schedule.
B. Measurement and payment is as noted on the Unit Price Schedule.
C. Refer to Section 01270 – Measurement and Payment for unit price procedures.
D. Staples and termination trenches are incidental to the geotextile installation and will not be paid for separately.
E. Geotextile used in termination trenches and overlaps is incidental to surface measurement.

1.3 REFERENCES

A. AASHTO M 288 – Geotextile Specification for Highway Applications.
B. ASTM D 4354 – Sampling of Geosynthetics for Testing.
C. ASTM D 4355 – Deterioration of Geotextiles by Exposure to Light, Moisture and Heat in a Xenon-Arc Type Apparatus.
D. ASTM D 4491 – Water Permeability of Geotextiles by Permittivity.
E. ASTM D 4533 – Trapezoid Tearing Strength of Geotextiles.
F. ASTM D 4632 – Grab Breaking Load and Elongation of Geotextiles.
G. ASTM D 4751 – Determining Apparent Opening Size of a Geotextile.
H. ASTM D 4833 – Index Puncture Resistance of Geotextiles, Geomembranes, and Related Products.

1.4 SUBMITTALS

A. Refer to Section 01330 – Submittal Procedures.
B. Submit catalog data. Clearly indicate the material(s) to be used. Provide geotextiles in accordance with the range of average roll values designated on the Plans. Attach a 4 inch by 4 inch sample to the submittal for each geotextile to be installed.

C. Submit manufacturer's recommended installation method for geotextile installation based on its designated use.

1.5 PRODUCT DELIVERY, STORAGE AND HANDLING

A. Inspect geotextile filter fabric delivered to the site for damage. Protect the geotextile from construction traffic damage.
B. Store the geotextile in accordance with the manufacturer's recommendations for outdoor storage.
C. Protect the geotextile from direct sunlight and ultraviolet radiation. Keep the fabric wrapped in its protective covering during shipping and storage. The label affixed to each roll should state manufacturer's name, geotextile name (product designation) and type, lot number, roll number and roll dimensions including length, width and gross weight. Replace or repair damaged geotextile or protective covering as directed by the Engineer.
D. Do not use hooks or other sharp objects to handle the geotextile. Do not drag the geotextile on the ground.

PART 2 – PRODUCTS

2.1 MATERIALS

A. Provide geotextile of woven monofilament material, as noted on the Plans or Unit Price Schedule. Woven slit film geotextiles or nonwoven geotextiles are not acceptable.
B. Provide geotextile fibers consisting of long chain synthetic polymers, composed of at least 95 percent by weight polyesters or polyolefins. These fibers shall be formed into a stable network such that the filaments or yarns retain their dimensional stability relative to each other, including the edges. Material shall be resistant to deterioration from ultraviolet radiation, heat exposure and commonly encountered soil chemicals, mildew, rot and insects.
C. Provide geotextile in accordance with requirements shown on the Plans.

PART 3 – EXECUTION

3.1 GRADE PREPARATION

A. Refer to Section 02241 – Care and Control of Water.
B. Construct areas on which the geotextiles for erosion control systems are to be placed to the lines and grades shown on the Plans. Prepare subgrade in accordance with Section 02315 – Excavating and Backfilling. Prior to placement of any geotextile for erosion control systems, Engineer will inspect the prepared subgrade.
C. Excavate and prepare termination trenches in accordance with the manufacturer's recommendations or as shown on the Plans.

D. Immediately prior to placing the geotextile, the Engineer shall inspect and approve the prepared section.

3.2 GEOTEXTILE INSTALLATION

A. Do not leave the geotextile exposed to the sun longer than the manufacturer recommends to minimize damage due to ultraviolet radiation. Do not install a geotextile if it has been removed from its protective covering longer than the manufacturer recommends.

B. For placement of geotextile, follow manufacturer's installation instructions and at a minimum:
   1. Place the geotextile directly on the prepared area. Lay the geotextile smoothly on the subgrade to minimize tension, stress, folds and wrinkles.
   2. After placement, do not unnecessarily walk on or disturb the geotextile unless required to preserve contact with the subgrade. Equipment is not allowed on the unprotected geotextile. Protect the geotextile from clogging, penetrations, tears and other damage during installation.
   3. Place the geotextile strips from downstream to upstream. Overlap successive geotextile sheets such that the upstream sheet is placed over the downstream sheet and/or the upslope over the downslope.
   4. Overlap adjoining geotextile sections a minimum of 2 feet.
   5. Replace or repair any geotextile damaged during the placement of riprap or other materials at no additional cost to the District. Place a geotextile patch of the same material over the area and extend a minimum of 3 feet beyond the perimeter of the tear and/or damage. Orient the patch material so that its fibers are aligned with the damaged geotextile fibers.

C. Placements under water are not permitted without Engineer's approval.

END OF SECTION

SECTION 03310

CONCRETE

Harris County
Flood Control District

PART 1 – GENERAL

1.1 SUMMARY

A. Section includes requirements for cast-in-place concrete.

1.2 MEASUREMENT AND PAYMENT

A. Where there is not a separate item listed on the Unit Price Schedule for work in this Section, no separate measurement and payment is made. Include cost for work under this Section in the related item listed on the Unit Price Schedule.
B. Measurement and payment is as noted on the Unit Price Schedule.
C. Refer to Section 01270 – Measurement and Payment for unit price procedures.

1.3 REFERENCE

A. ACI 117 – Tolerances for Concrete Construction and Materials.
B. ACI 211.1 – Selecting Proportions for Normal, Heavyweight and Mass Concrete.
C. ACI 214.3R – Simplified Version of the Recommended Practice for Evaluation of Strength Test Results of Concrete.
D. ACI 302.1R – Concrete Floor and Slab Construction.
E. ACI 304R – Measuring, Mixing, Transporting, and Placing Concrete.
F. ACI 305R – Hot Weather Concreting.
G. ACI 308 – Curing Concrete.
H. ACI 309R – Consolidation of Concrete.
I. ACI 315 – Detailing Reinforced Concrete Structures.
J. ACI 318 – Building Code Requirements for Reinforced Concrete.
K. ASTM A 82 – Steel Wire, Plain, for Concrete Reinforcement.
L. ASTM A 185 – Steel Welded Wire Reinforcement, Plain, for Concrete.
M. ASTM A 615 – Deformed and Plain Billet-Steel Bars for Concrete Reinforcement.
N. ASTM A 767 – Zinc-coated (Galvanized) Bars for Concrete Reinforcement.
O. ASTM A 775 – Epoxy-Coated Steel Reinforcing Bars.
P. ASTM A 884 – Epoxy-Coated Steel Wire and Welded Wire Reinforcement.
Q. ASTM C 33 – Concrete Aggregates.
R. ASTM C 94 – Ready-Mixed Concrete.

S. ASTM C 138 – Unit Weight, Yield, and Air Content (Gravimetric) of Concrete.
T. ASTM C 143 – Slump of Hydraulic-Cement Concrete.
U. ASTM C 150 – Portland Cement.
V. ASTM C 172 – Sampling Freshly Mixed Concrete.
W. ASTM C 173 – Air Content of Freshly Mixed Concrete by Volumetric Method.
X. ASTM C 231 – Air Content of Freshly Mixed Concrete by Pressure Method.
Y. ASTM C 260 – Air-Entraining Admixtures for Concrete.
Z. ASTM C 309 – Liquid Membrane-Forming Compounds for Curing Concrete.
AA. ASTM C 494 – Chemical Admixtures for Concrete.
BB. ASTM C 595 – Blended Hydraulic Cements.
CC. ASTM C 685 – Concrete Made by Volumetric Batching and Continuous Mixing.
DD. ASTM C 1077 – Laboratories Testing Concrete and Concrete Aggregates for Use in Construction and Criteria for Laboratory Evaluation.
EE. CPMB-100 – Concrete Plant Standards, Part 2 – Plant Control Systems.
FF. CRSI – Placing Reinforcing Bars.
GG. CRSI MSP-1 – Manual of Standard Practice.

1.4 SUBMITTALS

A. Refer to Section 01330 – Submittal Procedures.
B. Submit proposed mix design and strength test data for each type and strength of concrete used.
C. Submit laboratory reports prepared by an independent testing laboratory verifying that materials used comply with the requirements of this Section.
D. Provide manufacturer's mill certificates for reinforcing steel for inspection in the field. Steel not accompanied by manufacturer's mill certificates will not be approved. Provide specimens for testing when required by Engineer.
E. Provide batch tickets showing mix design number and the information required by ASTM C 94 for ready-mixed concrete delivered to the site. Provide batch tickets showing the information required by ASTM C 685 for concrete produced by continuous mixing.
F. Submit certification from concrete supplier that materials and equipment used to produce and deliver concrete comply with this Section.
G. Submit Shop Drawings in accordance with ACI 315 and ACI 318, when required, showing reinforcement type, quantity, size, length, location, spacing, bending, splicing, support, fabrication details and other pertinent information.
H. For waterstops, submit product information, including manufacturer's description literature, installation instructions and specifications.

I. Submit curing procedures including materials and equipment to be used.

1.5 HANDLING AND STORAGE

A. Reinforcing Steel: Store reinforcing steel to protect it from damage and formation of excessive rust. Protect epoxy-coated steel from damage to the coating.

PART 2 – PRODUCTS

2.1 CONCRETE MATERIALS

A. Cementitious Material:
   1. Portland Cement: ASTM C 150, TypeI/II or II, unless the use of Type III is authorized by Engineer; or ASTM C 595, Type IP. For concrete in contact with sewage, use Type II cement.
   2. When aggregates are potentially reactive with alkalis in cement, use cement not exceeding 0.6 percent alkali content in the form of Na_2O + 0.658 K_2O.
B. Water: Clean, free from harmful amounts of oils, acids, alkalis or other deleterious substances and meeting requirements of ASTM C 94.
C. Aggregate:
   1. Coarse Aggregate: ASTM C 33. Unless otherwise indicated, use the following ASTM standard sizes: No. 357 or No. 467; No. 57 or No. 67, No. 7. Maximum size: Not larger than 1/5 of the minimum dimension between sides of forms, nor larger than 3/4 of minimum clear spacing between reinforcing bars.
   2. Fine Aggregate: ASTM C 33.
   3. Determine the potential reactivity of fine and coarse aggregate in accordance with the Appendix to ASTM C 33.
D. Air Entraining Admixtures: ASTM C 260.
E. Chemical Admixtures:
   1. Water Reducers: ASTM C 494, Type A.
   2. Water Reducer and Retarder: ASTM C 494, Type D.
   3. High Range Water Reducer (Superplasticizer): ASTM C 494, Types F and G.
F. Prohibited Admixtures: Admixtures containing calcium chloride, thiocyanate, or materials that contribute free chlorine ions in excess of 0.1 percent by weight of cement.
G. Reinforcing Steel:
   1. Use new billet steel bars conforming to ASTM A 615, ASTM A 767, or ASTM A 775, grade 40 unless otherwise shown on Plans. Use deformed bars except where smooth bars are specified. When placed in work, keep steel free of dirt, scale, loose or flaky rust, paint, oil or other harmful materials.
   2. Where shown, use welded wire fabric with wire conforming to

ASTM A 185 or ASTM A 884. Supply the gauge and spacing shown, with longitudinal and transverse wires electrically welded together at points of intersection with welds strong enough not to be broken during handling or placing.

3. Wire: ASTM A 82. Use 16-1/2 gauge minimum for tie wire unless otherwise shown on the Plans.

H. Curing Compounds: Liquid membrane-forming compounds conforming to ASTM C 309, with white or other heat reflecting pigment.

2.2 FORMWORK MATERIALS

A. Lumber and Plywood: Seasoned and of good quality, free from loose or unsound knots, knot holes, twists, shakes, decay and other imperfections which would affect strength or impair the finished surface of concrete. Use S4S lumber for facing and sheathing.

B. Formwork: For exposed concrete indicated to receive rubbed finish, provide form or form-lining surfaces free of irregularities.

C. Form Ties: Metal or fiberglass of approved type with tie holes not larger than 7/8 inch in diameter.

D. Metal Forms: Clean and in good condition, free from dents and rust, grease or other foreign material that tend to mar or discolor concrete, in a gauge and condition capable of supporting concrete and construction loads without significant distortion. Countersink bolt and rivet heads on facing sides. Use only metal forms which present a smooth surface and which line up properly.

2.3 PRODUCTION METHODS

A. Use either ready-mixed concrete conforming to requirements of ASTM C 94 or concrete produced by volumetric batching and continuous mixing in accordance with ASTM C 685.

2.4 MEASUREMENT OF MATERIALS

A. Measure dry materials by weight, except volumetric proportioning may be used when concrete is batched and mixed in accordance with ASTM C 685.

B. Measure water and liquid admixtures by volume.

2.5 DESIGN MIX

A. Use design mixes prepared by a certified testing laboratory in accordance with ASTM C 1077 and conforming to requirements of this Section.

B. Proportion concrete materials based on ACI 211.1 to comply with durability and strength requirements of ACI 318, Chapters 4 and 5, and this Section.

C. Proportioning on the basis of field experience or trial mixtures in

accordance with the requirements of Section 5.3 of ACI 318 may be used, if approved by Engineer.

D. Classification:

Type	Minimum 28-Day Compressive Strength (Lbs./sq.in.)	Maximum W/C Ratio	Air Content (Percent)	Consistency Range in Slump (Inches)	Cementitious Content (Lbs./cy)
Structural	3000	0.55	3-5	2 to 4	470
Non-Structural	1500	n/a	3-5	5 to 7	329

E. Determine air content in accordance with ASTM C 138, ASTM C 173 or ASTM C 231.

F. Use of Concrete Types: Use types of concrete as indicated on the Plans Unless indicated otherwise on the Plans or Specifications, use non-structural, unreinforced concrete for pipe plugs, seal slabs, thrust blocks, trench dams and concrete fill; use structural, reinforced concrete for all other applications.

PART 3 – EXECUTION

3.1 FORMS AND SHORING

A. Install forms in accordance with ACI 304R.

B. Provide mortar-tight forms sufficient in strength to prevent bulging between supports. Set and maintain forms to lines designated such that finished dimensions of structures are within the tolerances specified in ACI 117. Construct forms to permit removal without damage to concrete. Provide adequate cleanout openings. Before placing concrete, remove extraneous matter from within forms.

C. Unless otherwise indicated, form outside corners and edges with triangular 3/4-inch chamfer strips (measured on sides).

D. Remove metal form ties to depth of at least 3/4 inch from surface of concrete. Do not use pipe spreaders. Remove spreaders which are separate from forms as concrete is being placed.

E. Immediately before the concrete is placed, wet surface of forms which will come in contact with concrete.

3.2 PLACING REINFORCEMENT

A. Place reinforcing steel as shown on the Plans. Secure steel in position in forms to prevent misalignment. Welding of reinforcing steel is not permitted unless noted on the Plans. Maintain reinforcing steel in place using approved concrete, hot-dip galvanized metal or plastic chairs and spacers. Place reinforcing steel in accordance with CRSI Publication "Placing Reinforcing Bars." Request inspection of reinforcing steel by Engineer

before concrete is placed.

B. Minimum spacing center-to-center of parallel bars: 2-1/2 times nominal bar diameter. Minimum cover measured from surface of concrete to face of reinforcing bar unless shown otherwise on the Plans: 2 inches.

C. Detail bars in accordance with ACI 315. Provide reinforcing steel fabricated in accordance with CRSI Publication MSP-1, "Manual of Standard Practice." Bend reinforcing steel to required shape while steel is cold. Do not overbend steel.

D. Provide splice and development length of bars as shown on Plans. Stagger splices or locate at points of low tensile stress.

3.3 EMBEDDED ITEMS

A. Install conduit and piping as shown on the Plans. Locate and fasten conduit, piping and other embedded items in forms.

3.4 BATCHING, MIXING AND DELIVERY OF CONCRETE

A. Measure, batch, mix and deliver ready-mixed concrete in accordance with ASTM C 94 and ACI 304R. Produce ready-mixed concrete using an automatic batching system as described in CPMB-100 Concrete Plant Standards, Part 2 – Plant Control Systems.

B. Measure, mix and deliver concrete produced by volumetric batching and continuous mixing in accordance with ASTM C 685.

C. Maintain concrete workability without segregation of material and excessive bleeding. Obtain approval of Engineer before adjustment and change of mix proportions.

D. Do not exceed the maximum water-cement ratio of the approved mix design. If all water allowed by the water-cement ratio has not been added at the start of mixing, the remaining water may be added no later than the time of delivery. Addition of water should be in accordance with ASTM C 94.

E. Do not mix concrete when the air temperature is at or below 40 degrees F and falling. Concrete may be mixed when temperature is 35 degrees F and rising. Take temperature readings in the shade, away from artificial heat. Protect concrete from temperatures below 32 degrees F until the concrete has cured for a minimum of 3 days at 70 degrees F or 5 days at 50 degrees F.

F. Conform to ACI 305R for batching concrete when air temperature is above 90 degrees F.

G. Clean, maintain and operate equipment so that it thoroughly mixes material.

H. Mixing methods other than as described above shall be used only when approved by Engineer.

3.5 PLACING CONCRETE

A. Place and consolidate in accordance with ACI 304R and ACI 309R.
B. Give at least 24 hours advance notice to Engineer to permit inspection of forms, reinforcing steel, embedded items and other preparations for placing concrete. Place no concrete prior to Engineer's inspection.
C. Schedule concrete placing to permit completion of finishing operations in daylight hours. However, if necessary to continue after daylight hours, light the site as required. If rainfall occurs after placing operations are started, provide covering to protect the work.
D. Use troughs, pipes and chutes lined with approved metal or synthetic material. Place concrete without allowing segregation. Keep chutes, troughs and pipes clean and free from coatings of hardened concrete. Do not allow aluminum material to be in contact with concrete.
E. Limit free fall of concrete to prevent segregation. Do not deposit large quantities of concrete at one location so that running or working concrete along forms is required. Do not jar forms after concrete has taken on initial set; do not place any strain on projecting reinforcement or anchor bolts.
F. Use tremies for placing concrete in walls and similar narrow or restricted locations. Use tremies made in sections, provide in several lengths, so that outlet may be adjusted to proper height during placement operations.
G. When the weather is hot enough to cause the concrete temperature to exceed 90 degrees F, employ means, such as pre-cooling aggregates and mixing water, using ice or placing at night, to maintain concrete temperature below 90 degrees F.
H. Consolidate each layer of concrete with concrete spading implements and mechanical vibrators of type and adequate number for the size of placement. Apply vibrators to concrete immediately after depositing. Do not use vibrators to aid lateral flow of concrete. Do not over-consolidate concrete.
I. Handling and Placing Concrete: Conform to ACI 302.1R, ACI 304R and ACI 309R.

3.6 CURING AND REMOVAL OF FORMS AND SHORING

A. Comply with ACI 308. Cure by preventing loss of moisture and rapid temperature change for a period of 7 days when Type I/II, II or IP cement has been used and for 3 curing days when Type III cement has been used.
B. Start curing as soon as free water has disappeared from the concrete surface after placing and finishing.
C. A curing day is any calendar day in which the temperature is above 50 degrees F for at least 19 hours. Colder days may be counted if air temperature adjacent to concrete is maintained above 50 degrees F. In continued cold weather, when artificial heat is not provided, removal of forms and shoring may be permitted at the end of calendar days equal to twice the required number of curing days.

D. Formed surfaces not requiring rubbed-finished surface:
   1. Cure by leaving forms in place for the full cure period or forms may be removed after 2 days and curing compound applied. Keep wood forms wet during the curing period. Add water as needed for other types of forms.
   2. Soffit Forms: Leave soffit forms and shores in place until concrete has reached the specified design strength unless otherwise directed by the Engineer.
E. Rubbed Finish:
   1. At formed surfaces requiring rubbed finish, remove forms as soon as practicable without damaging the surface. Remove forms from surfaces requiring rubbing only as rapidly as rubbing operation progresses. Remove forms from vertical surfaces not requiring rubbed finish when concrete has aged for the required number of curing days.
   2. After rubbed-finish operations are complete, continue curing formed surfaces by using either approved curing/sealing compounds or moist cotton mats until normal curing period is complete.
F. Unformed Surfaces: Cure with approved membrane curing compound method in accordance with ASTM C 309.
   1. After concrete has received a final finish and surplus water sheen has disappeared, immediately seal surface with a uniform coating of approved curing compound, applied at the rate of coverage recommended by manufacturer or as directed by Engineer. Provide uniform coverage at a minimum rate of 1 gallon per 180 square feet of area.
   2. Thoroughly agitate the compound during use and apply by means of approved mechanical power pressure sprayers equipped with atomizing nozzles. For application on small miscellaneous items, hand-powered spray equipment may be used. Prevent loss of compound between nozzle and concrete surface during spraying operations.
   3. Do not apply compound to a dry surface. If concrete surface has become dry, thoroughly moisten surface immediately prior to application. At locations where coating shows discontinuities, pinholes or other defects, or if rain falls on a newly coated surface before film has dried sufficiently to resist damage, apply an additional coat of compound at the specified rate of coverage.

3.7 FINISHING

A. Patch honeycomb, minor defects and form tie holes in concrete surfaces with cement mortar mixed 1 part cement to 2 parts fine aggregate. Repair defects by removing unsatisfactory material and replacing with new concrete, keyed and bonded to existing concrete. Finish to provide a uniform surface between patches and existing concrete.

B. Apply a broomed finish to all exposed surfaces of interceptor structure inlets and channel lining. Apply broomed finish in a single, continuous stroke perpendicular to flow to produce a uniform surface.
C. Apply a rubbed finish to all exposed surfaces unless directed otherwise on the Plans or by the Engineer. After pointing has set sufficiently, wet the surface and perform first surface rubbing with No. 16 carborundum stone or approved equal. Do not add cement to form surface paste. Rub sufficiently to bring surface to paste; to remove form marks and projections; and to produce a smooth, dense surface. Spread or brush material, which has been ground to paste, uniformly over surface and allow to reset. In preparation for final acceptance, clean surfaces and perform final finish rubbing with No. 30 carborundum stone or approved equal. After rubbing, allow paste on the surface to re-set; then wash surface with clean water. Leave structure with a clean, neat and uniform finish.

3.8 DEFECTIVE WORK

A. Remove and repair defective work at no cost to the District.
B. If concrete surface is bulged, uneven, or shows honeycombing or form marks which cannot be repaired satisfactorily through patching, remove and replace the defective work as directed by the Engineer.
C. Replace or repair pitted or washed concrete as directed by the Engineer.

3.9 TESTING AND INSPECTION

A. Refer to Section 01457 – Construction Tests and Inspection.

3.10 PROTECTION

A. Refer to Section 02316 – Structural Excavating and Backfilling.
B. Provide for protection of freshly placed concrete against damage from precipitation by having sufficient material on-site to protect finished surface.

3.11 MATERIAL DISPOSAL

A. Refer to Section 02120 – Material Disposal.

END OF SECTION