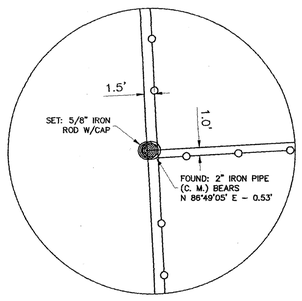

DETAIL 5

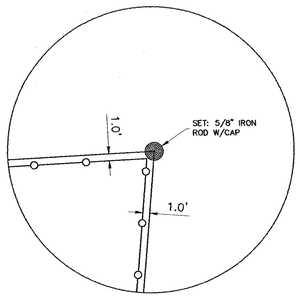

DETAIL 6

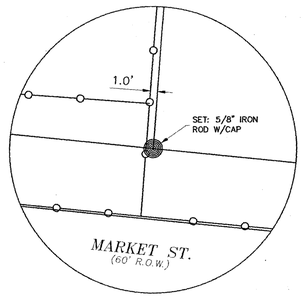

DETAIL 7

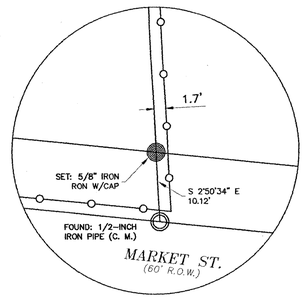

DETAIL 8

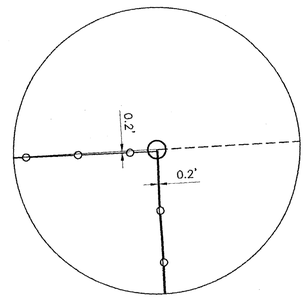

DETAIL 9

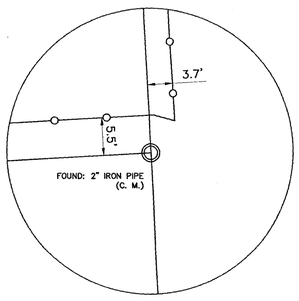

DETAIL 4

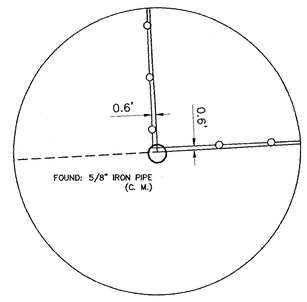

DETAIL 10

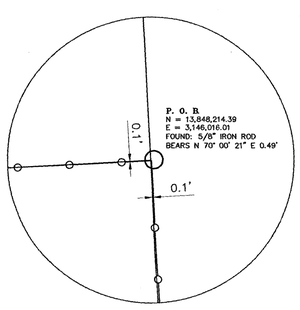

DETAIL 3

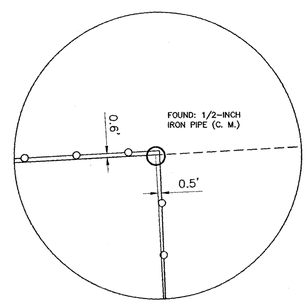

DETAIL 11

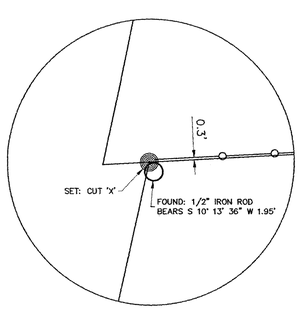

DETAIL 2

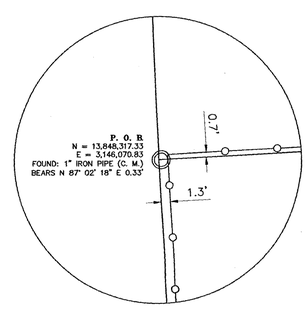

DETAIL 12

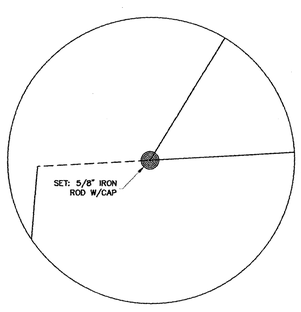

DETAIL 1

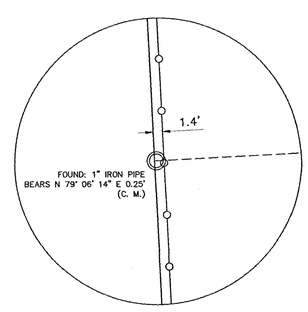

DETAIL 13

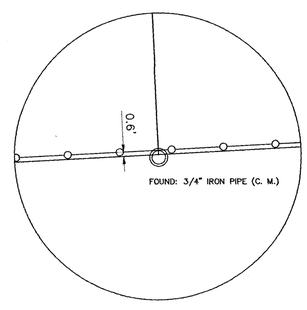

DETAIL 14

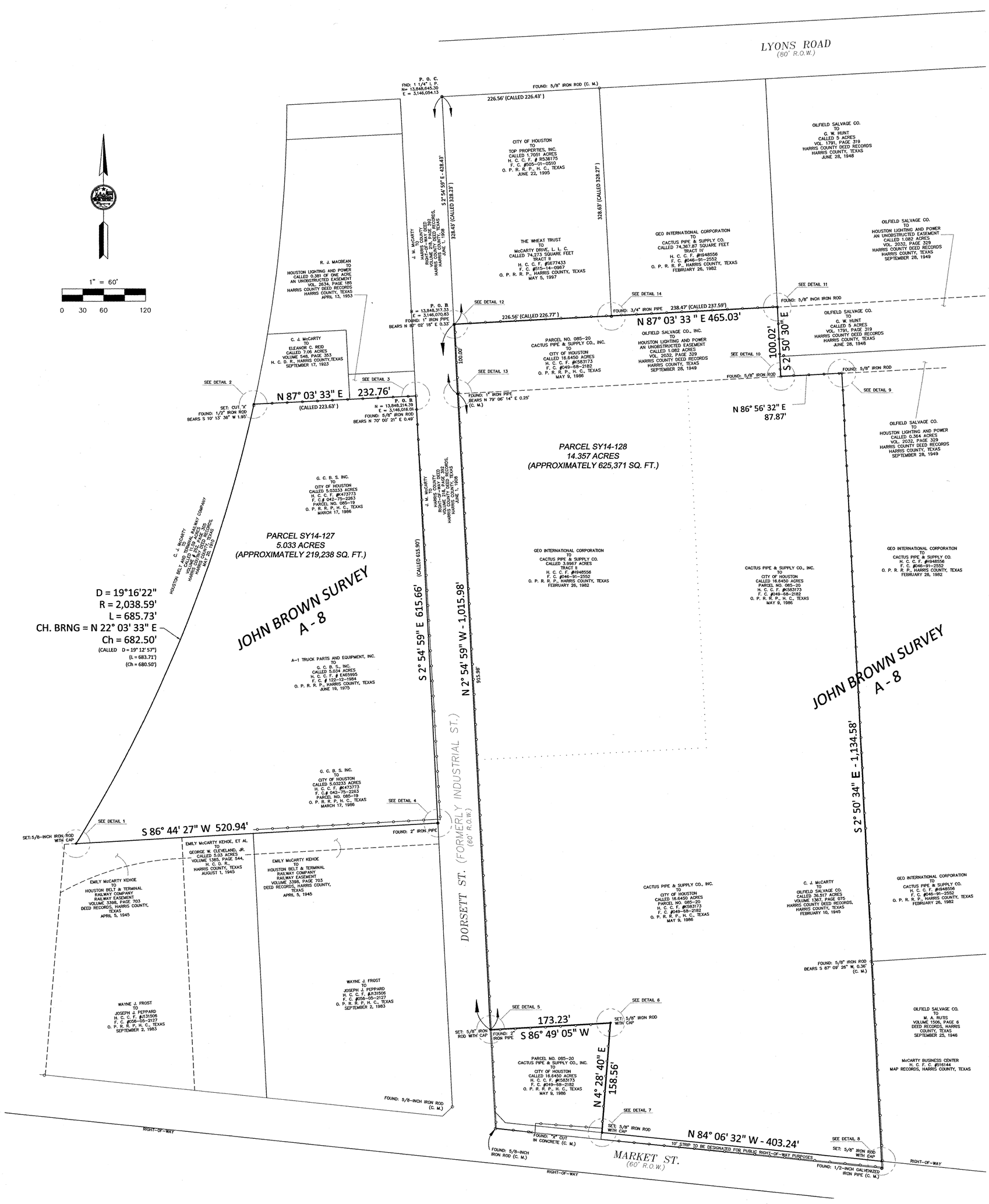

LEGEND:

H. C. C. F.#	HARRIS COUNTY CLERK'S FILE NUMBER
F. C.#	FILM CODE NUMBER
O. P. R. R. P.	OFFICIAL PUBLIC RECORDS OF REAL PROPERTY
H. C. M. R.	HARRIS COUNTY MAP RECORD
H. C. D. R.	HARRIS COUNTY DEED RECORD
(C. M.)	CONTROL MONUMENT
R. O. W.	RIGHT OF WAY
—o—o—o—	CHAIN LINK FENCE

NOTES:

1. ALL COORDINATES LISTED HEREIN ARE EXPRESSED IN UNITS OF U. S. SURVEY FEET. ALL COORDINATES LISTED HEREIN ARE GRID COORDINATES. ALL DISTANCES SHOWN HEREIN ARE "SURFACE" DISTANCES. ALL BEARINGS SHOWN HEREIN ARE REFERENCED TO GRID NORTH THAT IS EMPLOYED BY THE TEXAS COORDINATE SYSTEM OF 1983, SOUTH CENTRAL ZONE. ALL COORDINATES LISTED HEREIN WERE DERIVED THROUGH GPS OBSERVATIONS CONDUCTED DURING THE MONTH OF APRIL, 2014. THE OPERATING NSRS METADATA FOR THESE OBSERVATIONS INCLUDES THE FOLLOWING: NAD '83 (2011), CORS 96, EPOCH 2010.00. TO CONVERT COORDINATES FROM GRID TO "SURFACE", APPLY A SCALE FACTOR OF 0.999894931091.
2. SQUARE FOOTAGE TOTALS SHOWN HEREIN ARE BASED ON MATHEMATICAL CLOSURES AND DO NOT NECESSARILY REPRESENT THE POSITIONAL ACCURACY OF THE EXISTING BOUNDARY MONUMENTATION.
3. A CORRESPONDING METES AND BOUNDS OF THIS PARCEL WAS PREPARED WITH THIS DRAWING, WHICH SAME MAY BE LOCATED IN THE CITY OF HOUSTON SURVEY SECTION FILES.

I, JACK R. CHILES, SR., HEREBY CERTIFY THAT THIS PLAT CORRECTLY REPRESENTS THE FACTS FOUND ON THE GROUND BY MYSELF OR BY PERSONNEL UNDER MY SUPERVISION AND THAT THIS SURVEY CONFORMS TO THE CURRENT STANDARDS AND SPECIFICATIONS OF THE PROFESSIONAL LAND SURVEYING PRACTICES ACT AS PROMULGATED BY THE TEXAS BOARD OF PROFESSIONAL LAND SURVEYING.

STATE OF TEXAS REGISTERED JACK R. CHILES 4778 PROFESSIONAL LAND SURVEYOR

JACK R. CHILES, SR., R.P.L.S.# 4778
06/16/2014

CITY OF HOUSTON
DEPARTMENT OF PUBLIC WORKS AND ENGINEERING
PHONE (832) 395-2378

BOUNDARY SURVEY OF 2 PARCELS OF LAND OUT OF AND A PART OF THE JOHN BROWN SURVEY, ABSTRACT 8, HARRIS COUNTY, TEXAS

6/16/14
DATE

SURVEY SECTION — RIGHT OF WAY SECTION

KEY MAP NO. 495-E	GIMS MAP NO. 5558D
PARCEL NOS. SY14-127 & SY14-128	
WBS #:	
DATE: 06/12/2014	
SURVEY BY: RB	
DRAWN BY: JRC/SB	
F.B.#: 228	
SCALE: 1:60	

52356

FILE NAME: H:\E&C Construction\SURVEY\Projects 2010\General Services\Dorsett (2 tracts)\Drawings\DORSETT_CONTROL.dwg