**CITY OF HOUSTON**
Houston Health Department
Bureau of Consumer Health Services
8000 North Stadium Drive
Houston, TX 77054
832-393-5100

# 2020 INFORMATION PACKET FOR FIXED LOCATION UNRESTRICED MOBILE FOOD UNITS (14-U'S)

## (Mobile Food Carts with open foods)


| **Packet Contents:** | **Page #** |
|---|---|
| General Information | 2-3 |
| Food Ordinance Requirements | 4-5 |
| Plans Check-List | 6-7 |
| Sample Plan | 8-11 |
| Menu Disclosure Forms | 12-14 |
| Form 1-B Conditional Employee or Food Employee Reporting Agreement | 15 |
| MFU Commissary (Property/Restroom) Agreement | 16 |
| Approved Commissaries List (Parks Units Only) | 17 |
| MFU Maps & Schedules (English & Spanish) | 18-19 |
| MFU Fire Inspection Report | 20-21 |
| Fire Extinguisher Service & Propane Companies List | 22 |
| Treatment of Contaminated MFU Water Tanks | 23 |
| Pre-Inspection Check-List | 24-25 |
| New MFU Fees Schedule | 26 |

Unrestricted Fixed Location and Park Vendor Units

# GENERAL INFORMATION

Fixed location unit/Food Carts:

If a unit does not meet the requirements to be classified as a conventional unit (enclosed, 30-gallon water tank, big sinks etc.) it may still receive a medallion (mobile unit permit) if it meets a specific alternate set of requirements and conditions.

**To summarize those requirements and conditions**:

- Cart must be no bigger than 8 feet long x 4 feet wide x 8 feet high.
- Must be movable by one person when fully loaded.
- May operate only at one location for the life of the permit/medallion.
- That location must have an on-premises food establishment with an active Food Permit, that serves as the unit's commissary. The commissary must equipped with a 3-compartment sink, a hand sink, and a cleaning area/mop sink or floor drain that goes to a grease trap.
- The cart must be stored inside the servicing area. (Cart must pass into building and into servicing area.)
- Unless all food served is pre-packaged and labeled at an approved commissary, the cart must have a 2- or 3-compartment sink (big enough to immerse the largest utensil on unit) and a separate hand sink. (see plans checklist for fixed location units)

Considerations:

Find a location before buying cart.
Submit plans and obtain approval before building or buying a cart.
No propane/cooking gas allowed downtown, in medical center or indoors (malls, office building lobbies, etc.)
Not all types of food preparation are allowed on a food cart. Please see chart below for examples of what is allowed and not allowed.

| Allowed | Not Allowed |
|---|---|
| 1. Reheating fully cooked meats or other TCS foods | Preparing/Cooking raw meats |
| 2. Preparing foods using pre-chopped, pre-processed ingredients (i.e., fruits and vegetables) | Chopping of fruits or vegetables on food cart |
| 3. Preparing non-TCS foods from TCS ingredients (crepes, waffles, waffle cones, etc.) | Preparing/cooking of TCS foods by processes that produce excessive smoke, heat or steam. (i.e., grilling burgers, frying French fries, etc.) |

**Park Vendors:**

General Information

A licensed park vendor operates at one park owned by the City of Houston.
The requirements for the cart itself are the same as for fixed location units.
A licensed park vendor may have a commissary that is not at the park (see commissary list) but must store the unit at the commissary.

**Steps to Opening a Fixed Location or Park Vendor Unit (Food Carts, including hot dog carts)**

1. Unless cart already has a Houston medallion from a previous owner, or serves only pre-packaged foods, submit 2 sets of plans along with a properly completed Menu Disclosure to 8000 N Stadium Dr., 1st Floor Permit Office. Include all required parts and information listed on the plans checklist. Pay the **$41.49 fee**.

2. Make appointment for inspection of the proposed commissary, (unless park vendor). Call 832-393-5063 or 832-393-5100. Make sure that the proposed unit can fit and pass into proposed commissary's cleaning/servicing to properly fill the fresh water tank and empty the waste water tank, before requesting the inspection **($130.43 inspection charge per visit). The plans (if submitted) will not be approved until after the proposed location and commissary have been approved**. The **location will not be approved** for operation unless the unit can access the 3 compartment sink and mop sink or floor drain that empties into the grease trap, and **the medallion will not be issued unless the location is approved.** Park Vendors: You may have an off-site commissary from the list.

3. Purchase or Construct Cart according to approved plans. Make sure unit is ready for inspection, including a full water tank. If unit uses propane, have unit inspected at an approved gas company and pay for LP Gas permit at 1002 Washington, 77002. LP Gas permit office phone: (832) 394-9083

Take unit to 7427 Park Place for inspection and pay for medallion.
Bring:
Picture I.D. (Current Driver's License Preferred)
City of Houston Food Manager Certification
Approved plans
Commissary letter (If no plans were required or if Park Vendor)
(Fees below payable with MasterCard, Visa or Discover credit or debit card, money order and cashier's check.)

*Mobile units/kiosks operating exclusively inside of permanent nonresidential buildings, such as retail shopping malls, office atriums and hospital lobbies will be inspected and issued medallions on site, after their plans are approved and permit fees are paid.

**$646.24** for medallion fee
**$130.43** for the pre-opening inspection.
**$16.50** for water sample fee

Note: For any changes to fees or regulations, see home page (Mobile Food Unit News)
Inspection times are 7am-10am, Tuesdays and Thursdays.

# Ordinance requirements:

*Special requirements for mobile food units operated by licensed park vendors.* In addition to complying with the other applicable requirements of this chapter, a mobile food unit operated by a vendor licensed under article IX of chapter 32 of this Code, must meet the following requirements:

**(1)**

A unit shall not exceed four feet in width, eight feet in length and eight feet in height including the unit's shade umbrella. In the event of an emergency, the unit must be easily movable, controllable, and maneuverable by one person when the unit is fully loaded. A unit shall have at least two operable rubber or rubber-like wheels that are less than eight inches in diameter. The bottom of the unit shall be at least one foot from the ground. The unit shall be non-motorized.

**(2)**

Each unit shall have protective glass guards and a roof or a shade umbrella to protect against exposure to insects, rodents, dust, or other contamination. Each unit shall have ample space available on the sides of the unit to display the prices of food, the name and street address of the vendor, and the medallion issued under section 20-37 of this Code.

**(3)**

Each unit shall have a litter receptacle attached to the unit available, clearly marked, and maintained for patron use. This litter receptacle shall have not less than a twenty-gallon capacity and shall be composed of a leak-proof, nonabsorbent material.

**(4)**

The interior of a unit shall be equipped with cabinet units or compartments. All food-contact surfaces shall be smooth, easily accessible and cleanable. Unfinished or painted wood shall not be used as a food-contact surface. Units that will dispense beverages must be equipped to do so from a closed carbonation system or bulk dispensing units or to distribute packaged beverages.

**(h)**

*Special requirements for fixed location mobile food units.* A mobile food unit that does not meet all criteria applicable to the permitting of a conventional mobile food unit may be permitted on a fixed location only basis, provided:

**(1)**

The unit complies with the same criteria stated in items (1), (2), (3) and (4) of subsection (g) above for units operated by licensed park vendors;

**(2)**

The unit shall be restricted to operation on the premises of one food establishment that holds a valid permit under this article, and the commissary serving the unit shall be located in that establishment; and

**(3)**

The commissary shall meet all applicable requirements of state law and city ordinances.

A fixed location mobile food unit that does not fully meet the requirements of item

(1) of subsection (g) above and was first operated under a medallion on or before February 13, 2000, shall be exempt from the requirements of item (1) of subsection (g) above provided that the operation continues under the same ownership and the medallion is continuously renewed without lapse or termination.

If the operator of the unit is not the operator of the food establishment, then the operator shall be required to furnish written proof of permission of the person who operates the food establishment premises to utilize the unit and commissary on the premises. In the event that the permit issued under this article for the food establishment on whose premises the unit and its commissary are situated expires without timely renewal or is revoked or suspended, the unit's medallion shall automatically be suspended until and unless the permit for the food establishment is restored to valid status.

**(i)**

*Alternatives; waivers.* The director of health and human services or any assistant or deputy director may authorize alternatives to particular requirements of this section or any other provisions of this article with respect to a mobile food unit. Any authorization shall be considered only upon written request, which shall set forth the provision for which an alternative is sought and the nature of the proposed alternative. Approval for the alternative shall be granted if it is determined that, for the purpose intended, the alternative proposed is at least equivalent to the requirement otherwise specified in this article with respect to safety, sanitation and related purposes. The burden of demonstrating compliance with the foregoing standard shall be upon the requestor. Consistent with the foregoing procedures and standards, the director of health and human services or any assistant or deputy director may waive any requirement of this article upon demonstration that it has no applicability for the purposes intended herein to the operation of the mobile food unit. An approval issued under this section shall be valid only if in writing and shall be limited in scope as provided therein.

20-22(f)(4)(a)

*Commissary servicing area and operations.*

**a.**

An enclosed service building separated from commissary operations shall be provided for supplying and maintaining mobile food units. The servicing area shall be at an approved location and constructed and operated in compliance with the requirements of this article. Fixed location mobile food units authorized under this article and mobile food units licensed under article IX of Chapter 32 of this Code shall be stored in the servicing area except while in operation for food service and during transport to and from the service building. A fixed location mobile food unit that does not fully meet the foregoing storage requirements and was first operated under a medallion on or before February 13, 2000, shall be exempt from this requirement provided that the operation continues under the same ownership and the medallion is continuously renewed without lapse or termination and provided that the permit holder uses alternative storage arrangements that are approved by the health officer.

**CITY OF HOUSTON**
Houston Health Department
Consumer Health Services Bureau
8000 North Stadium Drive
832.393.5100

## Plans Check-List for Unrestricted Fixed Location Mobile Food Units -14U

(The following deficiencies were noted on the attached plans and specifications:)

| | |
|---|---|
| | One set of properly prepared plans (no larger than 11”x17”) and specifications are required. Plans should be drawn to scale and must include a floor plan, plumbing diagram, finish schedule for sides, counters, and interior spaces, a complete equipment lay-out with full details (including cold-hold units), and drawings of the exterior of the unit. Plans must be clear, have legible print, and not present conflicting information about the unit. Provide information on food preparation surfaces, counters, and cabinets. |
| | Plans as submitted are not of sufficient detail to complete the review process. |
| | *Include a site plan showing location of unit with respect to commissary.( Access to commissary, map showing route from kiosk to commissary, storage area hand sink, 3-compartment sink and mop sink) Also indicate the size of entrance doors into the servicing area, and that the cart can fit through those doors. |
| | *Include a letter from commissary affording unit storage, access to hand/3-compartment sink and mop sink. |
| | The business name must be permanently affixed on two sides of the unit with lettering no less than 3 inches in height. Indicate business name and owner/operator on plans. Each must have space on sides to display prices of food, the name and street address of the vendor, and the medallion. |
| | A Completed Menu Disclosure Form must be submitted **in English**, for approval at the same time plans are submitted. |
| | Provide a covered garbage container of at least 20 gallons capacity attached to the unit for patron use. |
| | Include a diagram of the plumbing system including all tanks, pumps, fixtures and piping. Hot and cold running water under pressure is required. |
| | What size and type of material is used for the water supply piping? |
| | The minimum size of the fresh water tank is 5 gallons. The fresh water tank must be permanently installed. * The fresh water tank must be constructed of a food grade material. (NSF or equal) |
| | Provide a hand sink separate from the 2 or 3 compartment sink. |
| | A utensil-washing sink is required. A two-compartment sink is required, however a three-compartment sink is recommended. Each compartment of this sink must be adequate to fully immerse the largest utensil used on the unit. Sink compartments must have rounded internal angles and be free of sharp corners or crevices. *Note*(Units with 2 compartment sinks must use an approved detergent sanitizer when cleaning and sanitizing utensils.) |
| | Show the location of a water pump with a pressure switch installed in the water supply system. Gravity systems are not acceptable. Air pressurized water systems must include a food grade on board air pump. |
| | Show the location of fresh water inlet on the unit. The fresh water inlet must be 3/4 inch in diameter or less. The fresh water inlet must be protected from contamination and be of a size and type that will prevent its use for any other purpose. The water tank must be sloped to an outlet that allows complete drainage of the tank. The water tank vent, if provided, must terminate in a downward direction and be provided with a protective filter or screened if the termination is in an interior space. |
| | What is the wastewater tank constructed of? The wastewater tank must be at least 6 gallons or 115% of the capacity of the fresh water tank, whichever is greater. The waste tank must be permanently installed. * |
| | What size and type of material is used for the wastewater drain and vent piping? |
| | Provide an atmospheric vent to the outside from the top of the wastewater tank. |
| | Provide "P" traps at sink drains. "S" type traps are not acceptable. |
| | The wastewater tank must be sloped to the drain. The wastewater tank must be capable of being completely drained during servicing. The drain outlet must be larger than any other piping in the waste system. |
| | Each unit shall have protective glass guards and a roof or shade umbrella to protect against exposure to insects, rodents, dust, or other contamination. The interior of the unit must be equipped with cabinets or compartments. All food contact surfaces must be smooth, easily accessible and cleanable. Units that will dispense non-potentially hazardous beverages must be equipped to do so from a closed system or bulk dispensing units or to distribute packaged beverages. |
| | A unit cannot exceed four feet in width, eight feet in length and eight feet in height including the unit’s shade umbrella or roof if provided. The unit must be easily movable, controllable, and maneuverable by one person when the unit is fully loaded; and cannot be motorized. A unit must have at least two operable rubber or |

| | |
|---|---|
| | rubber-like wheels which are less than eight inches in diameter. The bottom of the unit must be at least one foot from the ground. |
| | **NOTE: Approval of plans does not constitute approval of the unit. Inspection of the unit is required for final approval.** |

*Fixed location mobile food units operating exclusively in a permanent nonresidential building that is primarily used for other purposes, such as a retail shopping mall, office atrium, or hospital lobby: may utilize other means to fill water tanks and flush wastewater tanks if approved by the health officer; must include these documents with their plans submission. All others must submit them before or on the pre-opening inspection date.

FOOD SERVICE MANAGER CERTIFICATION:
Call 832-393-5100 to make a reservation to attend the required class or complete the on-line class prior to bringing mobile food unit to 7427 Park Place for pre-opening inspection. Provide class date to inspector during check-in. **A certified manager must be on duty when engaging in manufacturing, production, preparation, processing, and packaging, service of food, make-ready and cleanup activities.**

FOOD HANDLER: All employees (that are not certified managers) must complete a food handler training course within 60 days of employment effective September 1, 2016.

Link to the on-line Food Service Manager and food handler training:
www.houstonconsumer.org

## EQUIPMENT LAY-OUT PLAN (A)

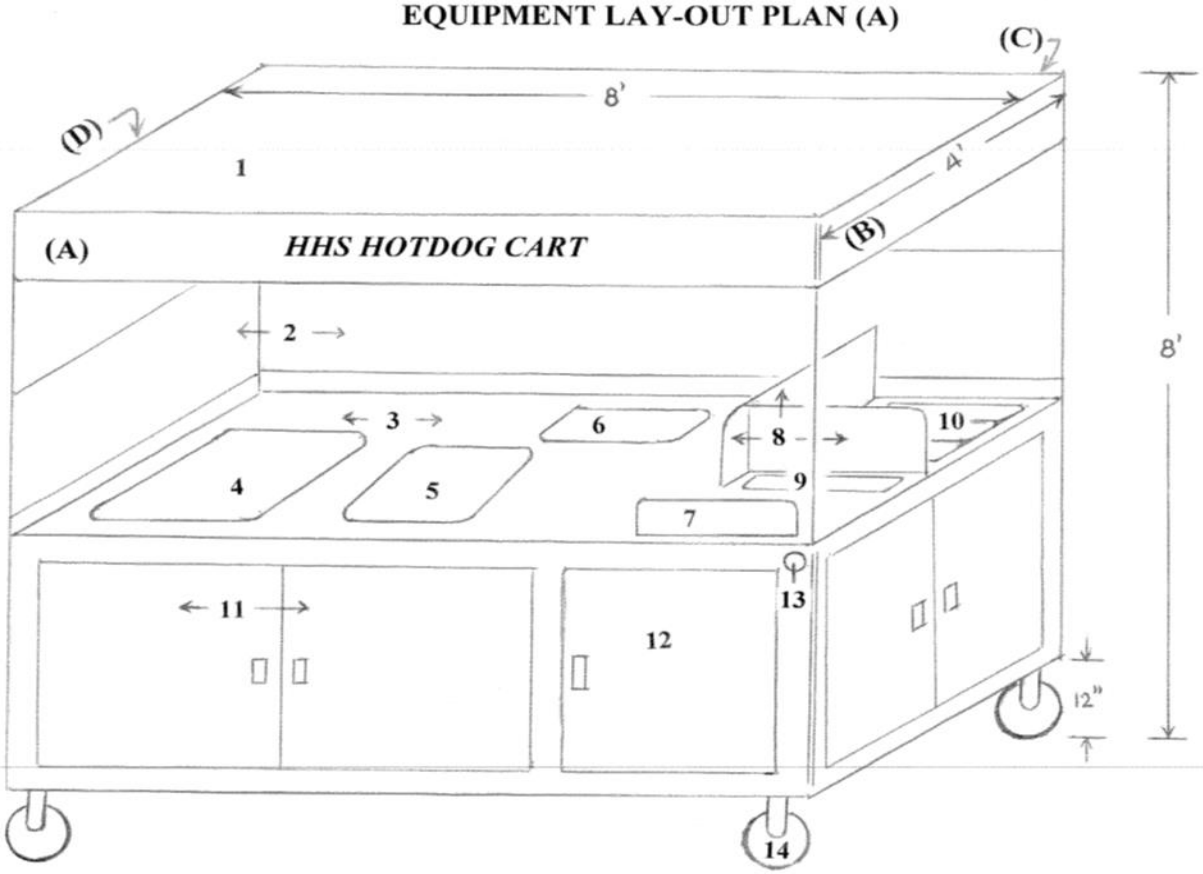


Business Name: HHS Hotdog Cart
(4" Letters, Readily Identifiable, Permanently affixed on at least 2 sides of the unit)

1. Canopy: Light yellow, Water-proof canvas, heavy-duty
2. Sneeze Guard: Plexi-glass
3. Work Surface (Top): Stainless Steel
4. Griddle (110V)
5. Steamer (110V)
6. Condiment Tray with Ice Bin: Stainless Steel
7. Cash Register
8. Splash Guard: Stainless Steel
9. Hand Lavatory: Stainless Steel
10. 3-compartment sink: 8"W x 12"L x 8"D/compartment, Stainless Steel, Rounded Internal Corners & Angles
11. Dry Storage Cabinets with Doors & Floor: Stainless Steel
12. Refrigerator (110V)
13. Fresh Water Inlet Valve: ¾" with protective cap & internal screen filter
14. Rubber Wheels: 8" diameter

## PLUMBING PLAN (B)

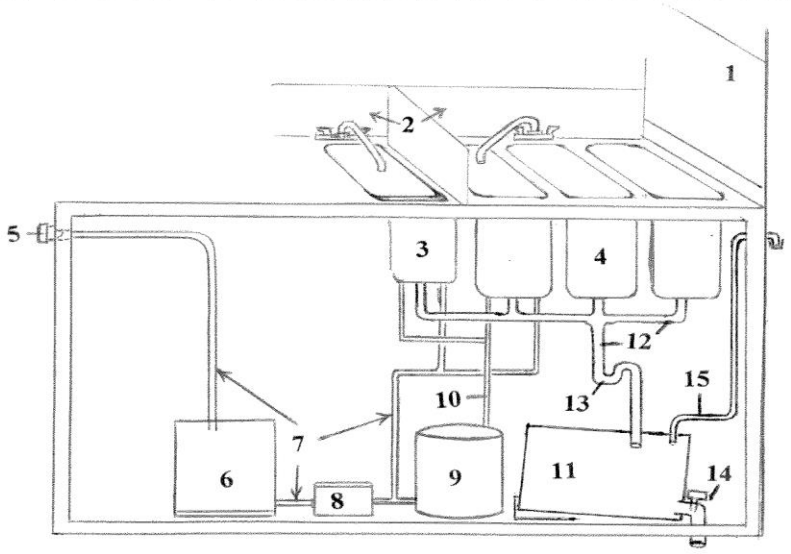


1. Sneeze Guard: Plexi-glass
2. Splash Guard: Stainless Steel (8" high)
3. Hand lavatory: 8"W x 12"L x 6"D,
   Stainless Steel, Rounded Internal Corners & Angles
4. 3-compartment sink: 8"W x 12"L x 8"D/compartment,
   Stainless Steel, Rounded Internal Corners & Angles
5. Fresh Water Inlet Valve: ¾" with protective cap &
   internal screen filter
6. Fresh water tank: 5 gal., Food-Grade Plastic, heavy-duty,
   Sloped for complete drainage, Permanently Installed
7. Cold Water Line: PVC, ½"
8. Water Pump (110V)
9. Water Heater (110V)
10. Hot Water Line: PVC, ½"
11. Waste Water Tank: 7gal., heavy-duty plastic,
    Permanently Installed, Sloped for complete drainage
12. Drain Line: PVC, 1 ½"
13. P-trap: PVC
14. Drain Valve: PVC, 2"
15. Atmospheric Vent Pipe: PVC, ½", with screen filter @ end

## EXTERIOR (C)

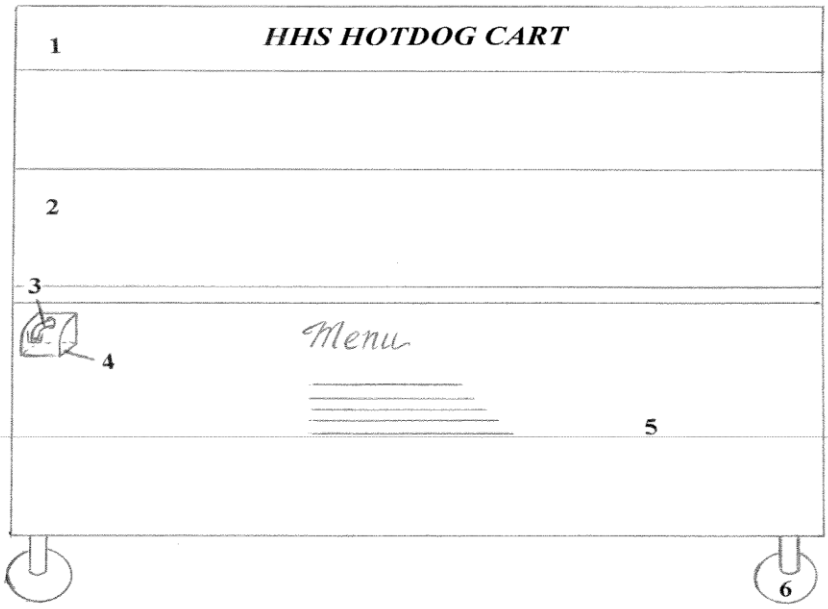


Business Name: HHS Hotdog Cart
(4" Letters, Readily Identifiable, Permanently affixed
on at least 2 sides of the unit)

1. Canopy: Light yellow, Water-proof canvas, heavy-duty
2. Sneeze Guard: Plexi-glass
3. Atmospheric Vent Pipe: PVC, ½", with screen filter @ end
4. Exterior Cover: Stainless Steel (open downward)
5. Storage Cabinets (inside): all Stainless Steel, (including bottom shelf)
6. Rubber Wheels: 8" diameter

## EXTERIOR (D)

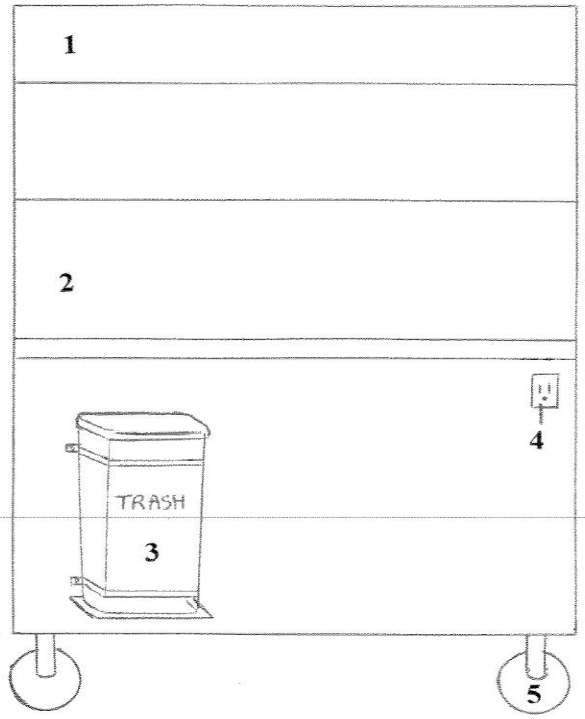


1. Canopy: Light yellow, Water-proof canvas, heavy-duty
2. Sneeze Guard: Plexi-glass
3. Patron's Trashcan with Lid: 20gals., heavy-duty plastic, attached to unit
4. 110V Quick Connect
5. Rubber Wheels: 8" diameter

**HOUSTON HEALTH DEPARTMENT**
Bureau of Consumer Health Services
8000 N. Stadium Dr., Suite 200
Houston, TX 77054
832-393-5100

# MENU DISCLOSURE

(New units & units changing ownership fill out before inspection)

| Business Name | Unit # |
|---|---|
| Mailing Address:<br><br>Email Address: | Business Phone #:<br><br>Mobile Phone #: |

**PRINT ALL INFORMATION BELOW CLEARLY IN ENGLISH**

1. Where will you buy your food supplies? (names and streets of all permitted businesses/suppliers)

2. List **ALL TCS** (Time/**Temperature Control for Safety**) and non-TCS foods, **supplies/ingredients** you will use on unit to prepare products listed in #12. (***Foods that are served raw, partially cooked, or prepared by specialized processes, such as sushi, ceviche or products prepared by sous vide are not allowed to be served from a mobile food unit.)***

3. Meals/meal times that you plan to serve: (✓all that apply) □Breakfast □Lunch □Dinner □Late Night

4. Where will you store the supplies? (Check all that apply)
   a) **On the unit** _____ b) In **the Commissary** _____ c) **Other** _____ (Provide explanation, such as: a permitted food establishment [name and address]
   _____

5. How will you verify that your cold TCS foods are held at 41º F or colder? (✓ all that apply)
   a) Indicating thermometer inside of refrigerator/freezer _____
   b) Metal stem food/product thermometer_____

6. How will you properly thaw frozen TCS food products? (✓ all that apply)
   a) In refrigerator unit not exceeding 41◦F _____
   b) As part of the conventional cooking process _____
   c) In a microwave oven, then transferred to a continuous conventional cooking process. (i.e. stove, grill, fryer) _____
   d) Cook completely from frozen to ready to eat in the microwave oven _____

7. A. What methods will you use to properly cool hot TCS foods? (✓ all that apply)
   1) Place food in shallow pans with food depth or 2 inches or less _____
   2) Separate large quantities of heated foods into smaller or thinner portions _____
   3) Use ice water bath to quick chill, stirring every 15 minutes _____
   4) Use blast chiller equipment _____
   5) Other approved methods (i.e. food grade cooling paddles, adding ice as an ingredient, etc.) _____
   B. What time frame(s) will you rapidly cool hot TCS foods down to 41◦F or below within?

8. How will you rapidly reheat TCS foods?
   a) What equipment will you use?
   c) What internal temperature will you reheat TCS foods to? _____◦F

9. How will you prevent bare hand contact with ready-to-eat foods?

10. What equipment will be utilized for hot holding? (maintaining the internal temperature of ready to eat TCS foods at 135◦F or above)

11. Will you use leftovers? Yes___ No ___ / If you marked yes,

    a) how will you handle them? (i.e. storing, date marking,)

    b) How long will you keep them before using or disposing of them?

12. Name all food/menu items served, ( not the recipes) (except for foods obtained and sold in manufacturer's unopened packages that do not require refrigeration) AND **steps of preparation** (including **final cooking temperatures of TCS foods**, equipment/utensils used, hot and cold-holding equipment & temperatures) THE HEALTH OFFICER MAY PROHIBIT THE SALE/PREPARATION/SERVICE OF SOME TCS (TIME/TEMPERATURE CONTROL FOR SAFETY) FOODS.
    ***(Food processing is PROHIBITED on Mobile Food Units, whether by conventional or specialized methods.)***

| FOOD / MENU ITEM (NAME) | STEPS OF PREPARATION PROCEDURES (i.e. thawing, washing, cooking, cooling & holding) | INSPECTOR'S NOTES: |
|---|---|---|
| **Name**: _____<br><br>Final preparation temperature (yours): _____◦F | | |
| **Name**: _____<br><br>Final preparation temperature (yours): _____◦F | | |
| **Name**: _____<br><br>Final preparation temperature (yours): _____◦F | | |
| **FOOD / MENU ITEM (NAME)** | **STEPS OF PREPARATION PROCEDURES (i.e. thawing, washing, cooking, cooling & holding)** | **INSPECTOR'S NOTES:** |
| **Name**: _____ | | |

| | | |
|---|---|---|
| Final preparation temperature (yours): _____◦F | | |
| **Name**: _____<br><br>Final preparation temperature (yours): _____◦F | | |
| **Name**: _____<br><br>Final preparation temperature (yours): _____◦F | | |
| **Name**: _____<br><br>Final preparation temperature (yours): _____◦F | | |

City of Houston Food Service Certified Manager completing this form: _____

City of Houston Food Service Manager Certification Number: _____ Expiration Date:_____

_____ _____ _____

Owner Signature Date

**MUST BE COMPLETED BY ALL FOOD EMPLOYEES AND A COPY KEPT ON THE UNIT**


# CITY OF HOUSTON

**HEALTH DEPARTMENT**

*BUREAU OF CONSUMER HEALTH SERVICES*

8000 N. STADIUM DR. 2nd Floor HOUSTON, TX 77054

832-393-5100


## FORM 1-B Conditional Employee or Food Employee Reporting Agreement

Preventing Transmission of Diseases through Food by Infected Conditional Employees or Food Employees with Emphasis on Illness due to Norovirus, *Salmonella* Typhi, *Shigella* spp.**,** or Shiga toxin-producing *Escherichia coli* (STEC), nontyphoidal *Salmonella* or Hepatitis A Virus

***The purpose of this agreement is to inform conditional employees or food employees of their responsibility to notify the person in charge when they experience any of the conditions listed so that the person in charge can take appropriate steps to preclude the transmission of foodborne illness.***

**I AGREE TO REPORT TO THE PERSON IN CHARGE:**

*Any Onset of the Following Symptoms, Either While at Work or Outside of Work, Including the Date of Onset:*

1. Diarrhea
2. Vomiting
3. Jaundice
4. Sore throat with fever
5. Infected cuts or wounds, or lesions containing pus on the hand, wrist, an exposed body part, or other body part and the cuts, wounds, or lesions are not properly covered (*such as boils and infected wounds, however small)*

### Future Medical Diagnosis:

Whenever diagnosed as being ill with Norovirus, typhoid fever (*Salmonella* Typhi), shigellosis (*Shigella* spp. infection), *Escherichia* coli O157:H7 or other STEC infection, nontyphoidal *Salmonella* or hepatitis A hepatitis A virus infection)

### Future Exposure to Foodborne Pathogens:

1. Exposure to or suspicion of causing any confirmed disease outbreak of Norovirus, typhoid fever, shigellosis, *E.* coli O157:H7 or other STEC infection, or hepatitis A.
2. A household member diagnosed with Norovirus, typhoid fever, shigellosis, illness due to STEC, or hepatitis A.
3. A household member attending or working in a setting experiencing a confirmed disease outbreak of Norovirus, typhoid fever, shigellosis, *E.* coli O157:H7 or other STEC infection, or hepatitis A.

I have read (or had explained to me) and understand the requirements concerning my responsibilities under the Houston Food Ordinance under Section 20-21.7 Employee Health and the Texas Food Establishment Rules under Section 228.35, 228.36, and 228.37 with respect to reporting, exclusions and restrictions from opportunities to transmit disease in a food establishment and this agreement to comply with:

1. Reporting requirements specified above involving symptoms, diagnoses, and exposure specified;
2. Work restrictions or exclusions that are imposed upon me; and
3. Good hygienic practices.

I understand that failure to comply with the terms of this agreement could lead to action by the food establishment or the food regulatory authority that may jeopardize my employment and may involve legal action against me.

Conditional Employee Name (please print) _____

Signature of Conditional Employee _____ Date _____

Food Employee Name (please print) _____

Signature of Food Employee _____ Date _____

Signature of Permit Holder or Representative _____ Date _____ Revised 11/06/2018

**HOUSTON HEALTH DEPARTMENT**
Bureau of Consumer Health Services
Mobile Food Units Program / 832-393-5100

Account Number

# 14U Mobile Food Units

**MOBILE FOOD UNIT COMMISSARY (PROPERTY/RESTROOM) AGREEMENT LETTER**

(Complete all Parts of this Letter)

**I,** _____ , _____
(First, Last Name of Person signing Letter) (Write "Owner or Manager")

**OF THE FOLLOWING PROPERTY** _____
(Name of Business) (Business Phone number)

**LOCATED AT** _____ GIVE PERMISSION TO:
(Give full Address; Number and Street/City, State and Zip Code)

_____ **OF** _____
(First, Last Name of Mobile Unit Owner) (Name of Mobile Food Unit)

**TO OPERATE THE MOBILE UNIT ON THE ABOVE STATED PROPERTY**
**AND FOR HIS/HER EMPLOYEES TO USE THE RESTROOMS LOCATED WITHIN THE BUSINESS FOR THE PERIOD**

**BEGINNING ON:** _____ **AND ENDING ON** *_____
(Start Date for the Agreement) (End Date for the Agreement)

## BUSINESS MUST PROVIDE THE FOLLOWING

- ☐ **OVERNIGHT STORAGE INSIDE ESTABLISHMENT**
- ☐ **ACCESS TO THE FOLLOWING**
  - ❑ **HAND SINK**
  - ❑ **3 COMPARTMENT SINKS (ACCESS TO FRESH WATER)**
  - ❑ **MOP SINK OR FLOOR DRAIN CONNECTED TO THE GREASE TRAP**

- **SIGNATURE OF OWNER / REPRESENTATIVE ** _____ DATE_____**
- **SIGNATURE OF NOTARY**: _____ **DATE**: _____

- **Notes: *The end date shall not exceed the expiration date of the unit's current mobile food medallion.**
- **** The person signing this letter much be the property owner or someone with the legal authority to authorize property use on behalf of the owner. (i.e. leasing agent or lessee whose contract authorized sub-leasing of the property)**
- **Falsification of any information provided on this document by any party will make this agreement null and void and may result in the revocation of the mobile food unit's medallion.**

# HOUSTON HEALTH DEPARTMENT

Bureau of Consumer Health Services
8000 N. Stadium Dr. Suite 200
Houston, Texas 77054
(832) 393-5100

## APPROVED OFF-SITE COMMISSARIES FOR
## UNRESTRICTED MOBILE FOOD CARTS OPERATING IN CITY PARKS

| NAME | Acct | ADDRESS | CONTACT |
|---|---|---|---|
| **Comissaria Southwest** | 228228 | 8331 Beechnut 77036 | Taysir (Ned) Zahra<br>Office: (713) 772-2000<br>Fax: (713) 772-2003 |
| **Della Carts** | 910067 | 6405 Brittmoore 77074 | Frank Dellasala<br>Office: (713) 937-8039 |
| **Diana's Food Service** | 213676 | 5407 Willomine Way 77045 | Rafael Alvarez<br>Office: (713) 433-5334 |
| **Distribuidor Mi Jalisco** | 404204 | 10602 Bauman 77076 | Raul Hernandez<br>(mobile) (281) 831-4100<br>Office: (713) 691-4006 |
| **Garcia Brother's Warehouse Commissary** | 971165 | 5739 Dwinnell 77023 | Jaime Garcia<br>(mobile) (832) 284-3022<br>Office: (713) 921-0285<br>**Fax:** (713) 921-0284 |
| **Mobile Caterers of TX** | 407488 | 3515 Eastex Fwy 77026 | Charles Smith (713) 222-8231<br>**Fax:** (713) 224-8222 |
| **Palacios Commissary** | 977699 | 6000 Waltrip 77087 | Juan Palacios (713) 645-0965 |
| **Tacos El Guero Commissary** | 409248 | 841 Crenshaw 77504 | Rafael Ortiz (832) 322-2380 |
| **Texas Commissary** | 986812 | 212 Harbor 77020 | Jeanie Osorio (713) 934-7281<br>**Fax**: (713) 934-7574 |
| **Texas Commissary II** | 222677 | 8121 Castleford 77040 | Jose Luis Osorio (713) 480-6969<br>(evenings) (713) 673-3931 |
| **Tex-Star Comisaria** | 413930 | 502 E. Rogers 77022 | Karen Narvaez (832) 203-8282<br>**Fax**: (832) 203-8277 |
| **Three Brothers Commissary** | 220299 | 610 Exchange 77020 | Conzaga Morales (713) 675-6277<br>**Fax:** (713) 675-6997 |
| **Taqueria de Buey y Vaca Commissary** | 427743 | 608 John Alber Rd, 77076 | Saul Garcia (713) 875-8025<br>Office: (281) 617-7115<br>Fax: (281) 617-7128 |

Note: This list is neither an endorsement nor a recommendation. It is provided solely as a public service to mobile food unit operators. If you intend to use a commissary that does not appear on this list, please call 832-393-5100 between the hours of 8am and 5pm to have that establishment inspected by a Pre-opening inspector. This will determine if the establishment in question complies with current City of Houston Ordinances. You must contact these establishments on your own to make commissary arrangements in writing. Revised 01/04/2019

# CITY OF HOUSTON

HOUSTON HEALTH DEPARTMENT
Consumer Health Services Bureau
P.O. Box 300008
Houston, TX 77230-0008
832-393-5100 (office)
832-393-5208 ( fax)


- All mobile food units are inspected at the Environmental Services Building, 7427 Park Place, Houston, TX 77087 on Tuesdays and Thursdays only.

- Inspection hours are from 7:00 a.m. until 10:00 a.m. Units arriving after 10:00 a.m. will not be inspected.

- All mobile food unit plans (for unrestricted units) and the plan checking fee must be submitted and paid prior to review at the City of Houston Department of Health and Human Services, 8000 N. Stadium Drive, Environmental Permits and Licenses Office, 1st floor. The office receives payments from 7:30 a.m. – 4:00 p.m., Monday – Friday. Payments can be made with money order, cashier's check, company check, or credit/debit cards (MasterCard, Visa, or Discover). Payments online at www.HoustonConsumer.org

- You will be called to pick up your plans at the City of Houston Department of Health and Human Services, 8000 N. Stadium Drive, Environmental Permits and Licenses Office, 1st floor between 7:30 a.m. – 4:00 p.m., Monday – Friday. The "Paid" receipt must be submitted in order for you to pick up your plans.

- For more information, please call 832-393-5100.

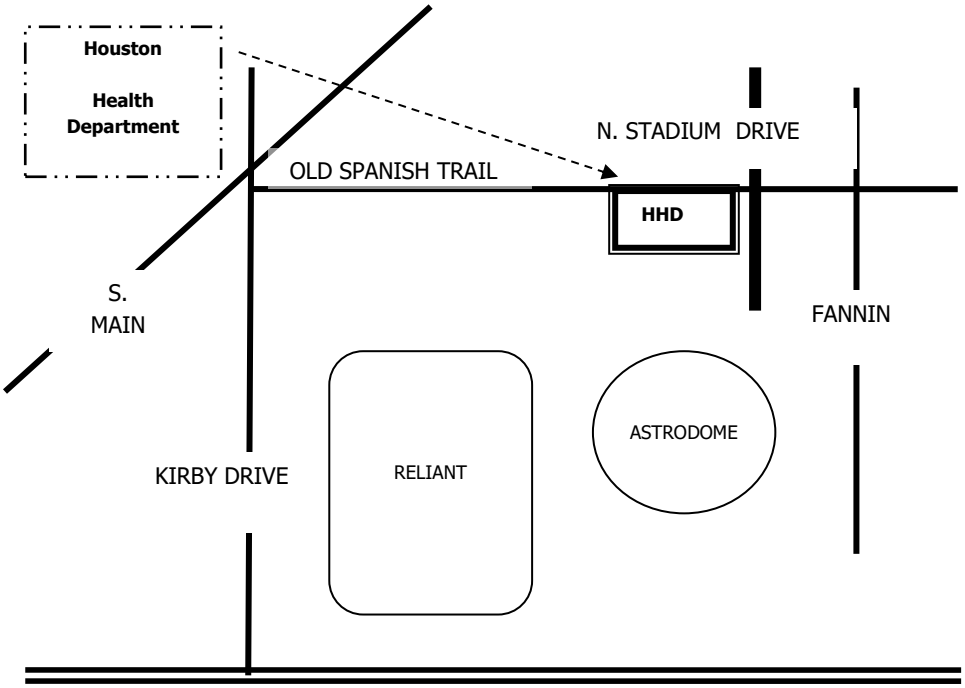


**610 SOUTH LOOP**

**CITY OF HOUSTON**
DEPARTMENT OF HEALTH AND HUMAN SERVICES
Consumer Health Services Bureau
P.O. Box 300008
Houston, TX 77230-0008
832-393-5100 (office)
832-393-5208 ( fax)

- Todas las unidades móviles de alimentos son inspeccionados en el Edificio de Servicios Ambientales, 7411 Park Place, Houston, TX 77087, los martes y jueves solamente.

- Horas de inspección son de 7:00 a.m. hasta las 10:00 a.m. Unidades que lleguen después de las 10:00 no serán inspeccionados.

- Todos los planos de unidades móviles de alimentos ( unidades sin restricción) y el plan de control de cuota deben ser presentados y pagados antes de su revisión en la Ciudad de Houston Departamento de Salud y Servicios Humanos, 8000 N. Stadium Drive, Oficina de Licencias y Permisos Ambientales, 1 ª planta. La oficina recibe pagos de 7:30 a.m. - 4:00 p.m., Lunes - Viernes. Los pagos pueden hacerse en efectivo, giro postal, cheque de caja, cheque de la empresa, o tarjeta de crédito / débito (MasterCard, Visa, American Express)

- Pagos por Internet www.HoustonConsumer.org

- Se le llamará para recoger sus planos en la Ciudad de Houston Departamento de Salud y Servicios Humanos, 8000 N. Stadium Drive, Oficina de Licencias y Permisos Ambientales. Entre las 7:30 a.m. - 4:00 p.m., Lunes - Viernes. El " recibo de Pago" debe presentarse para que usted pueda recoger sus planos.

- Para obtener más información, por favor llame al 832-393-5100.

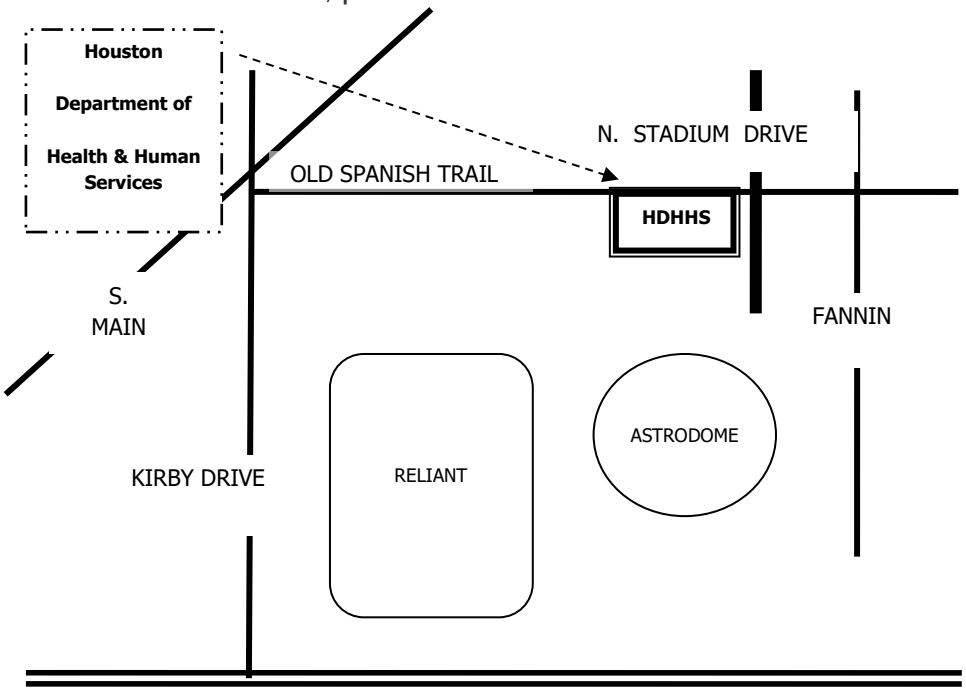


**610 SOUTH LOOP**

# *CITY OF HOUSTON*

HOUSTON FIRE DEPARTMENT
FIRE MARSHAL'S OFFICE
1002 WASHINGTON AVE, HOUSTON, TX. 77002
832-394-8811

# MOBILE FOOD UNITS INSPECTION REPORT

**BUSINESS NAME**_____ **DATE** _____

**BUSINESS ADDRESS** _____ **HOUSTON, TX 77**_____

**OCCUPANT** _____ **DL #** _____ **ST.** _____

**OCCUPANT ADDRESS** _____ **HOUSTON, TX 77**_____

**TELEPHONE #** _____ **CELL. PHONE #** _____

**MEDALLION ACCOUNT #** _____ **PROJECT #** _____

**MFU License Plate #**_____

***INSPECTION REPORT***

**Your attention is respectfully called to the violations of the provisions of the following Code of Ordinances of the City of Houston, on the premises located at the address listed above.**
**The violations discovered at this facility include but may not be limited to the violations listed on this report. Additional violations may be discovered during subsequent visits.**

---

- ❑ A permit is required for mobile food units (MFU) using any amount of LP Gas for commercial cooking. Any other mobile food units at the same property address will also be required to have their own individual permit. Permit fee is $207.50, office located at 1002 Washington Avenue.

- ❑ An **approved inspection sticker** valid for **12 months** must be displayed on all LP-Gas appliances (Stoves, Fryers, etc.) indicating that a licensed LP-Gas company has inspected the equipment. (Excluding LP gas cylinders). Present a valid receipt for gas inspection

- ❑ All (MFU) shall carry a **(3A-40BC minimum)** Fire Extinguisher. In addition, a **Type K** portable extinguisher shall also be carried in the MFU when deep-fry cooking is used involving vegetable oils or animal oils. Both fire extinguishers shall have **current annual inspection date tags**.

- ❑ **"No Smoking"** signs approved by the Fire Marshal shall be visible near propane containers. No Smoking signs shall be provided in **English and Spanish**.

- ❑ An approved ventilation system shall be installed over cooking equipment. Hoods shall be operated at the required rate of air movement. Classified grease filters shall be in place and cleaned as needed.

- ❑ ll LP-gas containers ***(empty or full)*** shall be secured in an upright position in such a manner as not to fall over. All MFU shall be position in a manner that will reduce the exposure of the LP-Gas cylinder to vehicle impact. Do not park MFU with LP gas cylinders facing oncoming traffic. Always utilize available protection for LP gas cylinders such as fences or barricades.

- ❑ All (MFU) within the boundaries of the District of Limitations No.1 (Downtown) and No.2 (Medical Center) shall be LIMITED TO A 60 LB. LP- gas cylinder and operate on private property only.

- ❑ Only personnel licensed by the *RAILROAD COMMISSION' OF TEXAS* (Life Safety Bureau Standard 10, section 3 .4) shall perform connections for LP-gas appliances located within District Of Limitation No. 1 (Downtown) and District of Limitation No.2 (Medical Center).

- ❑ Refueling of generators shall be performed in an approved location not less than 20 feet from the mobile food units (MFU). Fuel shall be stored in UL or FM approved flammable liquid safety containers and in an approved location.

- ❑ The operator of a (MFU) that uses any amount of LP-gas to prepare food shall not operate such unit within **60 feet** of another mobile food unit, except, at festivals or events approved by the Fire Marshal.

**COMMENTS**_____

_____

_____

_____

_____

**Failure on your part to comply with the indicated violations will subject you to the penalties prescribed by law for such violations.**

**Re-inspection Date** _____

**Inspecting Officer : D. Hypolite** **Telephone: 832-771-8814**

## FIRE EXTINGUISHER SERVICE COMPANIES

| | | | |
|---|---|---|---|
| A-1 Fire Equipment<br>12711 East Freeway<br>Houston, Texas 77015<br>(713) 455-0296 | AAA Fire Equipment Co.<br>7707 Bissonnet St.<br>Suite # 110<br>Houston, Texas 77074<br>(713) 777-6655 | Buckeye Fire Equipment<br>6226 Brookhill Dr.<br>Houston, Texas 77087<br>(713) 645-3388<br>(Mike Abke 713-319-5001) | Fire Extinguisher Services<br>7714 Glover St.<br>Houston, Texas 77012<br>(713) 644-5151 |

**Note: This list is neither an endorsement nor a recommendation. It is provided solely as a public service to you.**

## APPROVED GAS EQUIPMENT INSPECTION COMPANIES

| | | | |
|---|---|---|---|
| Blue Flame<br>13823 Packard<br>Houston, TX 77040<br>Phone: 713-462-5414<br>Contact: Joe Green<br>290 @ Fairbanks | Northside Propane<br>11404 Eastex Freeway<br>Houston, TX 77093<br>Phone: 281-590-7575<br>Contact: Dana Young<br>Hopper @ East Mt. Houston | R & R Propane – South<br>101 Spencer Highway<br>South Houston, TX 77587<br>Phone: 713-910-5884<br>Contact: Jake Rouse | R & R Propane – North<br>13146 Mill River<br>Houston, TX 77070<br>Phone: 832-671-9258<br>Contact: Jake Rouse |
| Propane Express<br>10603 Tower Oaks Blvd<br>Houston, TX 77070<br>Phone: 281-300-4352<br>Contact: Anthony Kroon | Southwest Commissary<br>8331 Beechnut<br>Houston, TX 77036<br>Phone: 713-772-2000 | AAA.LP-Gas L.T.D. L.L.P.<br>18402 Stuebner Airline<br>Spring TX. 77379<br>Phone: 281-376-5601<br>Contact: Brenda Boatman | Daina's Commissary<br>13515 S. Post Oak Rd.<br>Houston, TX 77045<br>Phone: 281-914-6275<br>Contact: Oscar Lazo |

**Note: This list is neither an endorsement nor a recommendation. It is provided solely as a public service to you. If one of these LP-gas (propane) companies can't assist you, contact any propane company in the telephone directory or internet. The company must be licensed with the Railroad Commission of Texas. The LP-gas company will have to inspect all appliances and make all LP-gas connections.**

HOUSTON HEALTH DEPARTMENT

# TREATMENT OF CONTAMINATED MOBILE FOOD UNIT POTALBE WATER TANK

If you are notified of positive water sample (sample contaminated with E.coli, a bacteria that can cause severe illness or even death, in humans), immediately **cease food service operations** and close your mobile food unit. Go to an approved Commissary and take the following measures: (You may also want to do this as a precautionary measure before bringing your unit in for the initial permitting inspection.)

1. Drain potable water tank and supply pipes completely. (open faucets)
2. Add some water but keep the tank less than half full. Pour chlorine bleach into potable water tank. (See chart below for amounts). In the case of a hose-valve inlet:
   a. Remove screen if present
   b. Cut a hose **(food grade-clean and sanitized)** near the end and connect the inlet valve
   c. Insert the end of a funnel **(that is clean and sanitized)** into the hose
   d. Pour bleach into funnel
3. Fill potable water tank with water.
4. Open all cold and hot water valves to draw chlorinated water through pipes until chlorine odor is detected.
5. Allow to stand 4 hrs. or overnight. (Or, use double the amount on chart and allow the chlorinated water to stand for at least 1 hr.)
6. Flush water tank thoroughly until no chlorine odor can be detected in water flowing from faucets. This will mean emptying potable water tank completely, draining waste water into drain at commissary, re-filling potable water tank. Repeat this until no chlorine odor is detected. This can be checked also with a chlorine test kit.
7. Take unit to 7427 Park Place on Wednesday, as scheduled by appointment only, for another water sample, with a Money Order of $16.50 and the green Commissary Receipt. (If you do not already have an appointment, contact Elsa Gonzalez at **(713) 201-9973** to schedule one.)
   ***If you arrive late for or miss your appointment, your water sample will NOT be collected, and you will have to call and reschedule for the next Wednesday.**

Note: If water tank and system are not flushed well enough of chlorine before the second sample is taken, the results could be inconclusive, requiring you to return again with the unit.

| How much bleach should I use? |
|---|
| 30-40-gallon tank → 1 gallon |
| 40-50 gallon tank → 1 gallon |
| 50-60 gallon tank → 1 gallon |
| 60-70 gallon tank → 1 gallon |
| 70-80 gallon tank → 1 gallon |
| 80-90 gallon tank → 1 gallon |
| 90-100 gallon tank → 1 gallon |

***Your mobile food unit is required to remain closed until the laboratory results for your water sample report negative for contamination, and you are re-opened by the Health Officer.**

**Bureau of Consumer Health Services**
Mobile Food Units Program
7427 Park Place Blvd. / Houston Texas 77087
Phone: (832) 393-5063

# 14U-PRE-INSPECTION CHECK-IN LIST

(FOOD CARTS THAT SERVE AND/OR PREPARE OPEN FOODS)

**You are required to have ALL of these items in order to receive an inspection**

---

NEW UNITS

☐ **DOCUMENTS**

- ☐ **New, signed Commissary Letter/Mobile Food Unit Property/Restroom Agreement Letter** from food permitted establishment at location where unit will be serviced and stored.
- ☐ **Site Plan** (Map showing where unit will operate, kitchen facility where unit will be serviced, and area where unit will be stored when not operating. Show route from operating location to kitchen/service area and storage area indicating that cart can fit through all doors and passage ways)
- ☐ Current, valid Driver's License or Photo ID
- ☐ City of Houston Food Manager Certification certificate / card
- ☐ Proof of Food Handler Certification (within 60 days of employment for workers that do not have Food Manager certifications)
- ☐ **Completed Form 1-B:** Conditional Employee Reporting Agreement for each employee
- ☐ **Menu Disclosure** (New units will have already submitted it with the Plans)
- ☐ **Commissary Receipt** issued within the last 24 hours
  [Units operating in Parks and using an off-site commissary]

☐ **Requirements to pass Fire Safety Inspection** (For units using propane)

a) Proper fire extinguisher (with current inspection tag)
b) LP Gas Permit (purchased within the last 90 days)
c) Invoice for Gas System Inspection

☐ **Generator** (We only provide 110 voltages and 30-amp connections. A generator is required for different voltage.)

☐ **Payment**

**$793.17** (For Mobile Food Unit Medallion, Preopening Inspection, and water sample fees)

**$130.43** (If the unit does not pass the initial preopening inspection)

---

## RENEWALS

☐ **Must meet all requirements for a new food cart except:**

- ○ Plans are not required
- ○ A new Site Plan is not required, unless operating, servicing or storage location has changed
- ○ A new Menu Disclosure Form is not required unless the menu has changed
- ○ Payment of **$662.74** (Includes Medallion and water sample fees)
- ○ **$130.43** for each unpaid re-inspection fee *

---

## CHANGE OF OWNERSHIP

☐ **Must meet all requirements for a new food cart except:**

- ○ Plans are not required, unless unit has undergone remodeling or reconfiguration
- ○ A new Site Plan is required
- ○ A new Menu Disclosure Form is required

---

****Payments are only accepted by credit and debit cards (MasterCard/Visa/Discover), cashier's checks, money orders and Company Checks with the same name as the MFU. No cash payments accepted.**

*****Units will NOT be inspected until ALL documents required above are submitted.**

**CITY OF HOUSTON**
Houston Health Department
Bureau of Consumer Health Services
8000 North Stadium Drive
Houston, TX 77054
832-393-5100

# NEW MOBILE FOOD UNIT FEES EFFECTIVE JANUARY 1, 2020

**Note * Only Money Orders, Cashier's Checks, Credit Cards (MasterCard, Visa or Discover) or Company Checks are accepted for payment of fees at the Environmental Inspection Center 7427 Park Place**
**Fees may be paid online www.Houston.Consumer.org**

| | |
|---|---|
| Mobile Food Unit Medallion (all units) | **$646.24** |
| Electronic Monitoring Fee (Unrestricted, Conventional units) | **$266.80** |
| Pre-opening inspections (new units or new owners) or remodeling of existing units per inspection | **$130.43** |
| Plan checking fee (new or remodeled unrestricted units) per submission | **$41.49** |
| Food Manager Certification Class | **$82.99** |
| Food Manager Certification Reciprocity | **$41.19** |
| Food Handler Training | **$11.85** |
| Re-inspection fee (poor sanitation inspection, failed pre-opening or renewal inspection) | **$130.43** |
| LP Gas Permit -if unit uses propane (separate payment made at 1002 Washington Avenue) | **$207.50** |
| Water Sample Fee (for laboratory testing of sample from fresh water tank) [*included in Unrestricted fees below] | **$16.50** |
| **Total payment to renew my expiring medallion** | |
| Unrestricted-Conventional* (food trucks & trailers) | **$929.54** |
| Unrestricted-Fixed Location* (food carts) | **$662.74** |
| Restricted Units [Conventional & Fixed Location] (food trucks, trailers & carts) | **$646.24** |
| **Total payment for a new medallion (new unit / new owner** | |
| Unrestricted / Conventional* (food trucks & trailers) | **$1059.97** |
| Unrestricted / Fixed Location* (food carts) | **$793.17** |
| Restricted / Conventional & Fixed Location* (food trucks, trailers & carts) | **$646.24** |