CERTIFICATE OF APPROPRIATENESS

APPLICATION FORM

PROPERTY

Address 1800 Texas Ave

Historic District / Landmark

HCAD #

Subdivision

Lot

Block

DESIGNATION TYPE

- ☐ Landmark
- ☑ Protected Landmark
- ☐ Archaeological Site
- ☐ Contributing
- ☐ Noncontributing
- ☐ Vacant

PROPOSED ACTION

- ☐ Alteration or Addition
- ☐ Restoration
- ☐ New Construction
- ☑ Relocation
- ☐ Demolition
- ☐ Excavation

DOCUMENTS

☐ Application checklist for each proposed action and all applicable documentation listed within are attached

OWNER

Name CITY OF HOUSTON

Company

Mailing Address 901 BAGBY 4th FLOOR

Phone 832-877-1044

Email [redacted]

Signature Thomas R. Cao

Date 1/15/15

APPLICANT (if other than owner)

Name DEL REIBOLD

Company MUSICK CONST.

Mailing Address 7777 WASHINGTON AVE.
Houston, TX 77007

Phone 402-415-1491

Email [redacted]

Signature

Date 1-15-15

ACKNOWLEDGEMENT OF RESPONSIBILITY

Requirements: A complete application includes all applicable information requested on checklists to provide a complete and accurate description of existing and proposed conditions. Preliminary review meeting or site visit with staff may be necessary to process the application. Owner contact information and signature is required. Late or incomplete applications will not be considered.

Deed Restrictions: You have verified that the work does not violate applicable deed restrictions.

Public Records: If attached materials are protected by copyright law, you grant the City of Houston, its officers, agencies, departments, and employees, non-exclusive rights to reproduce, distribute and publish copyrighted materials before the Houston Archaeological and Historical Commission, the Planning Commission, City Council, and other City of Houston commissions, agencies, and departments, on a City of Houston website, or other public forum for the purposes of application for a Certificate of Appropriateness or building permit, and other educational and not for profit purposes. You hereby represent that you possess the requisite permission or rights being conveyed here to the City.

Compliance: If granted, you agree to comply with all conditions of the COA. Revisions to approved work require staff review and may require a new application and HAHC approval. Failure to comply with the COA may result in project delays, fines or other penalties.

Planner: _____ *Application received:* ___/___/___ *Application complete:* ___/___/___

CERTIFICATE OF APPROPRIATENESS

APPLICATION INSTRUCTIONS

Well in advance of the COA application deadline contact staff to discuss your project, application requirements, and, if necessary, to make an appointment to meet with staff for a project consultation. Visit the Historic Preservation Web Manual for historic district profiles, project guidance and forms. www.houstontx.gov/HistoricPreservationManual

Historic Preservation Office	**713.837.7963**	**historicpreservation@houstontx.gov**

SUBMISSION INSTRUCTIONS

To submit application to Planning Department:

- email documents to historicpreservation@houstontx.gov (attachments must be less than 10MB)
- send a Dropbox shared folder invitation to historicpreservation@houstontx.gov, or
- contact staff to set up an appointment to drop off a disc or flash drive.

MEETING SCHEDULE

- Applications are due **22 calendar days** in advance of the HAHC meeting by **12 PM (noon)** on the deadline date. Exception: revisions to items deferred or denied at the previous HAHC meeting are due 15 days in advance of the scheduled meeting.
- Application deadlines are firm. All materials must be submitted by the deadline to be considered at the following HAHC meeting. Designs must be final at time of application; revisions will not be accepted after the deadline.
- HAHC will not accept new material or redesigns presented at the HAHC meeting. Deferral until the following month's meeting may be necessary in such cases to allow for adequate review by staff and commissioners.
- HAHC monthly meetings are held at 3:00 PM at City Hall Annex, 900 Bagby Street, City Council Chambers, Public Level.

2014 Meeting Dates (Thursdays unless noted otherwise)	**COA Application Deadlines**	**Demolition / Relocation Posted Sign Deadlines**
October 23	October 1	October 13
November 20	October 29	November 10
December 17 (Wednesday)	November 25	December 7

DEFINITIONS

Addition: any expansion to an existing building, structure or object.

Alteration: any change to the exterior of a building or structure, including adding, moving, removing or replacing an exterior feature.

Demolition: an act or process that destroys in whole, or a majority of, any building, structure, object or site.

Excavation: to expose, uncover, or remove by digging, cutting or hollowing out.

Exterior Feature: an element of the architectural character and the general arrangement of the external portion of a building, structure or object, including building materials.

Mandatory Repair: a repair of a building or structure that is necessary to comply with Article IX, Ch. 10, Houston Code of Ordinances, as evidenced by an order of the hearing official or the building and standards commission or by a citation.

New Construction: the erection of a new building, structure, or object, on a lot, site, or other property.

Relocation: any change in the location of a building, structure, or object.

Restoration: accurately recovering the form and detail of a building, structure, object, or site and its setting as it appeared at a particular period of time by means of the removal of later work, or by the replacement of missing earlier work, or both.

CERTIFICATE OF APPROPRIATENESS

RELOCATION CHECKLIST

Well in advance of the COA application deadline contact staff to discuss your project and, if necessary, to make an appointment to meet with staff for a project consultation.

Submit all items with the COA application form. An incomplete application may cause delays in processing or may be deferred to the next agenda. Refer to Houston Code of Ordinances, Ch. 33 VII, Sec. 33-243 through 33-245 for approval criteria for relocation. Relocation applicants must give public notice by posting a sign at the site of the structure proposed for relocation. Refer to attached public notice sign requirements for instructions.

PROPERTY ADDRESS: **1800 Texas Avenue (AKA 1801 Capital Avenue)**

RELOCATION SITE: **1800 Texas Avenue (AKA 1801 Capital Avenue)**

RELOCATION TYPE

- [X] move a contributing structure on its current property
- [ ] move a contributing structure out of the historic district
- [ ] move a contributing structure within the historic district
- [ ] move a non-designated or noncontributing structure within or into a historic district
- [ ] move a landmark or protected landmark

WRITTEN DESCRIPTION

- [X] property description, current conditions and any prior alterations or additions **(see attached)**
- [X] destination description; details of the location where the subject of the proposal will be relocated **(see attached)**

PHOTOGRAPHS label photos with description and location

- [X] site as seen from street, from front and corners, include neighboring properties **(see attached)**
- [X] proposed relocation site and neighboring conditions **(see attached)**
- [ ] public notice sign(s) at the site upon installation with time stamp

DRAWINGS include all setback dimensions and drawing scale

- [X] current site plan or survey **(see attached)**
- [X] proposed site plan or survey **(see attached)**

Relocation of the Cohn House on Its Current Property | Application #150105

The Nau Center Foundation seeks approval to relocate the Cohn House to a different location on the site where it is currently located.

The site is being re-platted and will be located in the 1800 block of Texas Avenue, bordered by Texas Avenue, Hamilton Street, Capitol Avenue, and Avenida de las Americas. The official address of the project, when the re-plat process is completed will be 1801 Capitol Avenue.

The existing property is being cleared of existing overhead utilities and minor site preparation and leveling will begin in the near future. The house is currently located in the middle portion of the site, and will be relocated to the southwest quadrant of the site, near the intersection of Avenida de las Americas and Capitol Avenue.

The house will be relocated by Cherry House Moving, a local company that specializes in relocation of historic buildings.

Please refer to the attached photographs depicting the existing site and Cohn House in its present location and approximate proposed location.

Also attached is a survey of the existing properties with the current location of the Cohn House and the proposed relocation of the Cohn House on the existing site.

Future Relocation Site at Capital Avenue and Avenida de las Americas

Future View from Capital Avenue

CURRENT LOCATION

CURRENT LOCATION

CURRENT LOCATION

CURRENT LOCATION

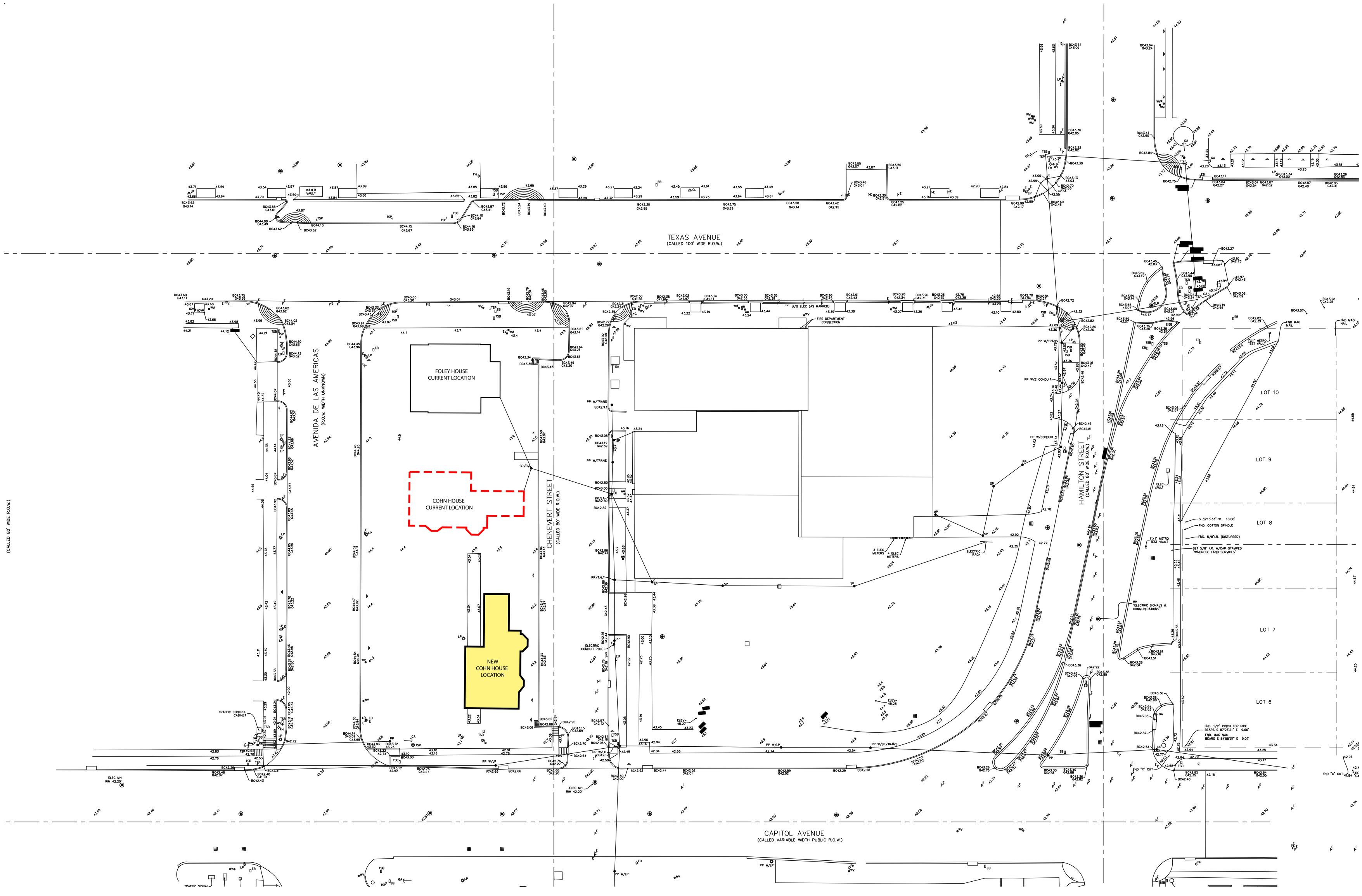

COHN HOUSE RELOCATION PLAN

DRAFT

DOCUMENT 008000 - THE SECRETARY OF THE INTERIOR'S STANDARDS FOR REHABILITATION

The Standards (Department of Interior regulations, 36 CFR 67) pertain to historic buildings of all materials, construction types, sizes, and occupancy and encompass the exterior and the interior, related landscape features and the building's site and environment as well as attached, adjacent, or related new construction. The Standards are to be applied to specific rehabilitation projects in a reasonable manner, taking into consideration economic and technical feasibility.

Rehabilitation is defined as the act or process of making possible a compatible use for a property through repair, alterations, **and additions** while preserving those portions or features which convey its historical, cultural, or architectural values.

1. A property shall be used for its historic purpose or be placed in a new use that requires minimal change to the defining characteristics of the building and its site and environment.

2. The historic character of a property shall be retained and preserved. The removal of historic materials or alteration of features and spaces that characterize a property shall be avoided.

3. Each property shall be recognized as a physical record of its time, place, and use. Changes that create a false sense of historical development, such as adding conjectural features or architectural elements from other buildings, shall not be undertaken.

4. Most properties change over time; those changes that have acquired historic significance in their own right shall be retained and preserved.

5. Distinctive features, finishes, and construction techniques or examples of craftsmanship that characterize a property shall be preserved.

6. Deteriorated historic features shall be repaired rather than replaced. Where the severity of deterioration requires replacement of a distinctive feature, the new feature shall match the old in design, color, texture, and other visual qualities and, where possible, materials. Replacement of missing features shall be substantiated by documentary, physical, or pictorial evidence.

7. Chemical or physical treatments, such as sandblasting, that cause damage to historic materials shall not be used. The surface cleaning of structures, if appropriate, shall be undertaken using the gentlest means possible.

8. Significant archeological resources affected by a project shall be protected and preserved. If such resources must be disturbed, mitigation measures shall be undertaken.

9. New additions, exterior alterations, or related new construction shall not destroy historic materials that characterize the property. The new work shall be differentiated from the old and shall be compatible with the massing, size, scale, and architectural features to protect the historic integrity of the property and its environment.

   COMMENT: The design for the Cohn House which penetrates the curtainwall of the Nau Center building clearly differentiates the historic nature of the Cohn House from the Nau Center building. The curtainwall of the Nau Center building is designed and detailed to create visual separation to emphasize the unique and historic nature of the Cohn House as an important visual feature of the site.

   The placement of the Cohn House is situated such that it is a prominent visual attraction for pedestrian traffic from the Avenida de las Americas, and the design of the building serves as a neutral backdrop to emphasize the unique historic features of the Cohn House.

The design also offers a direct link between the building and the educational mission of the facility by providing an ADA accessible and secure entry into the Cohn House directly from the Education wing of the Nau Center without leaving the Gathering Space of the Education wing. This gives the Cohn House a prominent influence from both the interior of the Nau Center, as well as the exterior visibility to the general public.

10. New additions and adjacent or related new construction shall be undertaken in such a manner that if removed in the future, the essential form and integrity of the historic property and its environment would be unimpaired.

    COMMENT: The design for the Cohn House and Nau Center is such that neither new additions nor new construction would ever be feasible in the future. The proposed design offers a permanent resting place for the Cohn House.

    CONCLUSION

    In our opinion and our experience with historic rehabilitation projects, we have designed a scope that successfully complies with each requirement of the Secretary of Interior's Standards for Rehabilitation (36 CFR 97) and the applicable portions of Sec. 33-241 of the City of Houston's Historic Preservation Ordinance.

END OF SECTION

SECTION 011100 – SUMMARY OF WORK

DRAFT

Part 1 – General

1.1 WORK COVERED BY CONTRACT DOCUMENTS

A. General Scope of Work:

1. Full Rehabilitation of the two story Arthur B. Cohn House to its 1905 interior and exterior condition with modern mechanical, electrical, and plumbing systems and accommodations for accessibility and exhibit displays.
2. All Work shall conform to the Secretary of the Interior's Standards for the Treatment of Historic Properties, Rehabilitation Treatment. Refer to section 008000.
3. The Cohn House Rehabilitation is to be coordinated with the Nau Center for Texas Cultural Heritage main building. The construction of the Nau Center for Texas Cultural heritage main building will be concurrent with the Cohn House Rehabilitation.
4. The house shall be lifted from its current foundations and relocated by Cherry House Moving.
5. Foundation scope:
   a. New foundations shall be constructed as part of the total construction scope.
   b. The house shall be relocated on new foundations by Cherry House Moving.
   c. The exterior of the house will be completely rehabilitated.
   d. The first floor will be completely rehabilitated and parts of the second floor will be completely rehabilitated.
   e. The exterior walls and roof framing are to be straightened, plumbed, and reinforced by installing rigid steel frames and bracing as indicated on drawings.

B. Architectural – Building Exterior, Demo & Rehabilitation

1. Demolition and salvage of exterior siding and trim as shown. Installation of salvaged materials and new siding material as shown.
2. Repair of exterior wood sheathing.
3. Application of 40-mil self-adhesive air/moisture barrier at walls and roof.
4. Reconstruction of ornamental wood details to match existing.
5. Reconstruction of cast masonry and concrete porch steps, wood porch railing.
6. Installation of landing and accessible ramp as part of the student entry from the Education wing.
7. All milled lumber for exterior siding and trim and interior standing and running trim shall be milled from salvaged long leaf pine to size and profile to match existing profiles.
8. Powder coated steel lattice over copper insect screen and stainless steel security screen between brick veneer piers at crawlspace. Portions of the lattice shall be removable for crawlspace access.
9. Install continuous horizontal stainless steel insect screen at bottom of floor joists in crawlspace (exterior)
10. Install R-19 rigid board insulation with foil face to bottom at floor joists in crawlspace. Coordinate with MEP trades.
11. Install full thickness blown-in cellulose insulation at all exterior walls.

C. Roof

1. Remove composition shingle roof system and plywood deck.
2. Install new ¾" AC plywood deck.
3. Install new 40-mil self-adhesive air/moisture barrier.
4. Install new fire retardant cedar shingle roofing.
5. Install R-19 rigid board insulation on underside of roof rafters with foil face down.

D. Architectural – Building Interior

1. Removal of all gypsum board at walls and ceilings and wall paper.
2. Remove wood sheathing as required to install insulation and conduits, ductwork, etc. on both floors. Coordinate with window and door details.
3. Restore wood flooring on first floor. Original wood flooring and inlay throughout the first floor shall receive a light sanding and an oil and wax finish. Areas of severe water damage or that are

unsound shall be replaced to match existing. New American red oak hardwood flooring and rosewood inlays shall be used to match size and profiles of existing.

4. Install pine flooring in Room 105 and Room 106 over existing wood deck
5. Restore bead board wall and ceiling finishes where shown to remain.
6. Install new full thickness blown in cellulose insulation in all exterior walls. Install standing and running trim as needed and as indicated to replace damaged material. Install crown molding and picture rails at all walls where shown on reflected ceiling plans including Rooms 101, 102, 104, 108, first floor, stair hall, and second floor stair hall.
7. Restore existing ceramic tile at fireplace hearths (3) and install new ceramic tile to fire box facing.
8. Install new 3/8" wall and ceiling gypsum board over interior sheathing to remain. Install new wallpaper to match samples as salvaged from the house.
9. Install new 3/8" gypsum wall and ceiling finish on second floor.
10. Refinish existing wood floors on second floor.
11. Restoration of existing wood windows, installation and repair of existing salvaged windows. Recreation of historic window locations.
12. Existing of leaded glass window repair and installation and protective glazed covering for leaded glass windows.
13. Exterior and interior doors: Repair damaged wood members; renovate existing doors and frames.
14. Door Hardware: Rehabilitate existing to operable condition. Provide new hinges, latchsets, locks, etc. as scheduled.
15. All milled lumber for exterior siding and trim and interior standing and running trim shall be milled from salvaged long leaf pine to size and profile to match existing trim.
16. Replace broken glass with period appropriate "wavy" single pane glazing using new linseed oil putty. Remove all existing glazing compounds and reglaze with linseed oil putty.
17. Install UV window film on interior surface of all new and existing glass panes.
18. Install wood venetian blinds at locations scheduled. Provide 2" wood slats, tape guides, and rope controls. No valences or "wands."
19. One stair window to receive a new leaded glass similar in design to the two existing stair windows.

E. Accessibility: Make the first floor fully accessible according to the guidelines of Texas Accessibility Standards.
   1. Adjust all interior door closer operating pressures to comply with TAS compliance.
   2. Install accessible hardware where indicated to comply with TAS compliance.

1.2 WORK UNDER OTHER CONTRACTS

A. Concurrent Work: The Cohn House Rehabilitation is concurrent with the main building construction of The Nau Center for Texas Cultural Heritage. The main building scope includes the construction of a new 2 story building that engages the Cohn House with a curtain wall. Those operations will be conducted simultaneously with work under this Contract.
   1. The Cohn House is partially located within the Nau Center for Texas Cultural Heritage, under construction during the same time period. The Nau Center main building scope will engage the Cohn House perimeter with a curtain wall system.
   2. Exhibit Installation: A separate contract may be awarded to install exhibit equipment and furniture into the renovated building.
   3. Exhibit Communications/Data Wiring Equipment: The Owner will provide and install communications and data equipment associated with exhibit features.
   4. Site work including sidewalks, landscaping, etc. to be included in The Nau Center for Texas Cultural heritage main building (Package One) scope.

B. Use of Existing Building: Maintain existing building in a weather-tight condition throughout construction period. Repair damage caused by construction operations. Protect building and its materials during construction period.

END OF SECTION

GENERAL NOTES

1. REFER TO LANDSCAPE SHEETS FOR PLAZA SCOPE.

KEY NOTES

1. 8 FT HIGH CHAIN-LINK FENCE.
2. 8" SPLIT FACE CMU WALL.
3. GREASE TRAP, RE: CIVIL & PLUMBING
4. WATER METER VAULT, RE: C4.0.
5. CONCRETE FILLED GALV. STL BOLLARD.
6. CONCRETE RAMP W/ HANDRAIL EACH SIDE.
7. CONCRETE RAMP W/ HANDRAILS EACH SIDE. MAX SLOPE 1:12.
8. EXISTING CONC. TRANSFORMER PAD. (N.I.C.)
9. RELOCATE EXISTING LIGHT POLE
10. PLAZA, REF: LANDSCAPE & CIVIL FOR SCOPE OF WORK.
11. EXISTING LIGHT POLE TO REMAIN, TYP.
12. NEW CONC. SIDEWALK. MAX SLOPE 1:20.
13. UNISTRUCT METER RACK. (N.I.C.)
14. OWNER PROVIDED TRASH DUMPSTER & RECYCLE DUMPSTER.
15. ASPHALT PAVING, SLOPE TO EXISTING AREA DRAIN.
16. CONCRETE CURB FLUSH WITH SIDEWALK.
17. SLOPED CONCRETE PAVED ALLEY, RE: C3.0.
18. EXIST. CONCRETE & PAVER SIDEWALK TO REMAIN.
19. PAVER TO MATCH EXIST
20. EXIST. CURB RAMP.
21. NEW CURB RAMP TO MATCH EXISTING
22. TRENCH DRAIN, RE: CIVIL
23. 8 FT. HIGH CHAIN-LINK GATE W/ LOCKABLE LATCH
24. CONCRETE INFILL

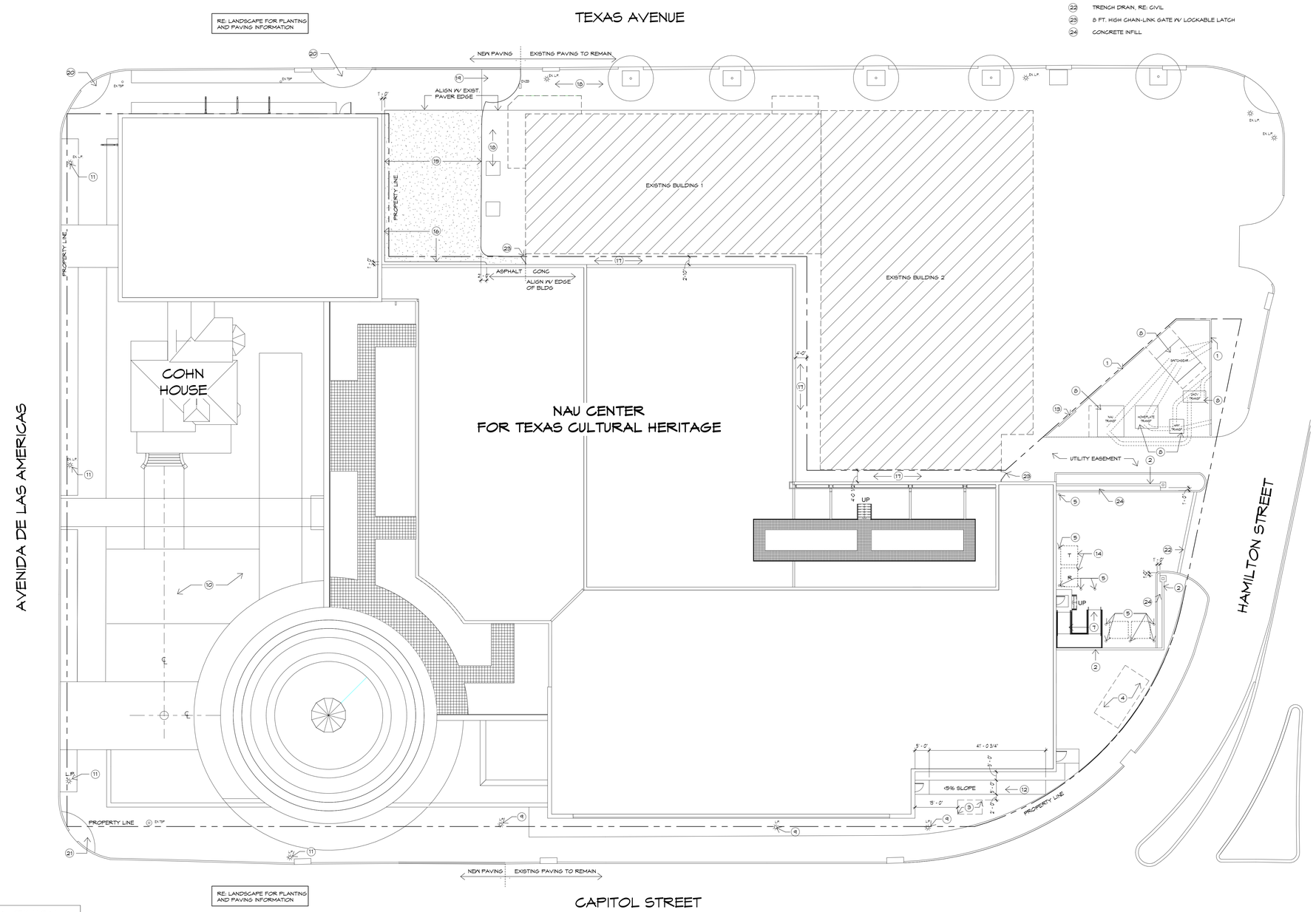

CONSTRUCTION ON THIS SHEET BELOW FINISH FLOOR (FOUNDATION, SITE, ETC...) PROVIDED FOR INFORMATION ONLY AND IS BEING PERMITTED SEPARATELY. PROJECT # 14109541

1 SITE PLAN
1/16" = 1'-0"
RE:

BAILEY ARCHITECTS
55 WAUGH DR. SUITE 450
Houston, TX 77007
PH:713.524.2555
FAX:713.524.3447
www.baileyarchitects.com

Consultants:

Walter P. Moore & Associates, Inc.
Civil Engineers
Cardno Haynes Whaley Assoc, Inc.
Structural Engineers
E&C Engineers & Consultants, Inc.
MEP Engineers
DataCom Design Group
Audio / Visual Consultant
Bos Lighting Design
Lighting Consultant
SLR International Corporation
Acoustics Consultant
The Office of James Burnett
Landscape Architects

REGISTERED ARCHITECT JAMES D. LEINEWEBER 5591 STATE OF TEXAS
1/26/15

NAU CENTER FOR TEXAS CULTURAL HERITAGE
PACKAGE 1
1801 Capitol St.
Houston, Texas

Issue	Date	Description
	1/26/15	Permit and Pricing

PROJECT NO.: 13022
FILE:
DRAWN BY: Author
CHECKED BY: Checker
COPYRIGHT: © Bailey Architects 2015

Sheet Title:
SITE PLAN

Sheet No:
A-101

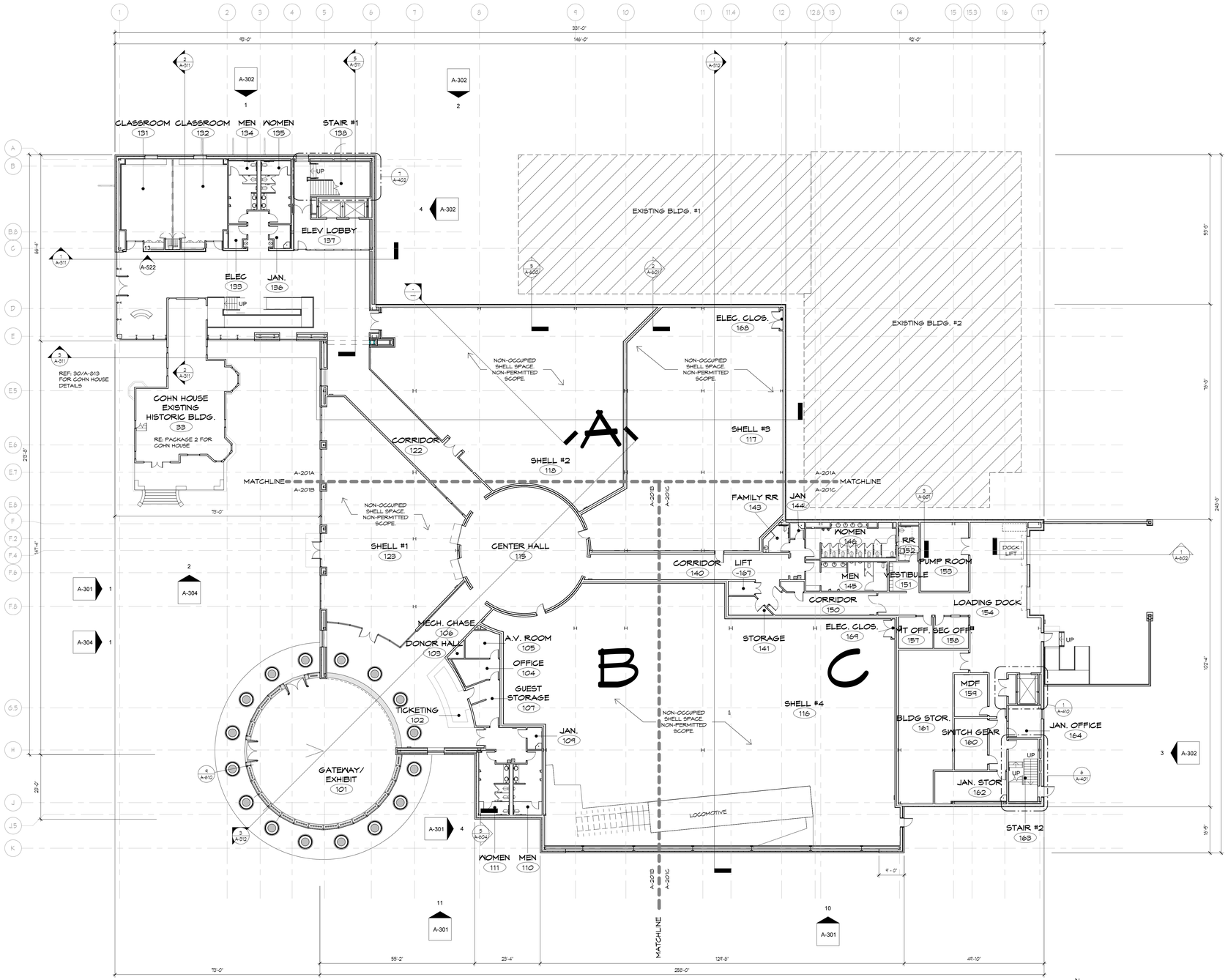

1 FLOOR PLAN - LEVEL 1
1/16" = 1'-0"
RE: 1 A-301

BAILEY ARCHITECTS
55 WAUGH DR. SUITE 450
Houston, TX 77007
PH:713.524.2155
FAX:713.524.3447
www.baileyarch.com

Consultants:

Walter P. Moore & Associates, Inc.
Civil Engineers
Cardno Haynes Whaley Assoc, Inc.
Structural Engineers
E&C Engineers & Consultants, Inc.
MEP Engineers
DataCom Design Group
Audio / Visual Consultant
Bos Lighting Design
Lighting Consultant
SLR International Corporation
Acoustics Consultant
The Office of James Burnett
Landscape Architects

REGISTERED ARCHITECT
GARY D. LEIKER
5591
STATE OF TEXAS
1/26/15

NAU CENTER FOR TEXAS CULTURAL HERITAGE

PACKAGE 1

1801 Capitol St.
Houston, Texas

Issue	Date	Description
	1/26/15	Permit and Pricing

PROJECT NO.: 13022
FILE:
DRAWN BY: Author
CHECKED BY: Checker
COPYRIGHT: © Bailey Architects 2015

Sheet Title:

LEVEL ONE- COMPOSITE FLOOR PLAN

Sheet No:

A-201

GENERAL NOTES

1. -

KEY NOTES

1. NOT USED
2. MOP SINK, RE: PLUMBING
3. ELECTRIC DRINKING FOUNTAIN, RE: PLUMBING

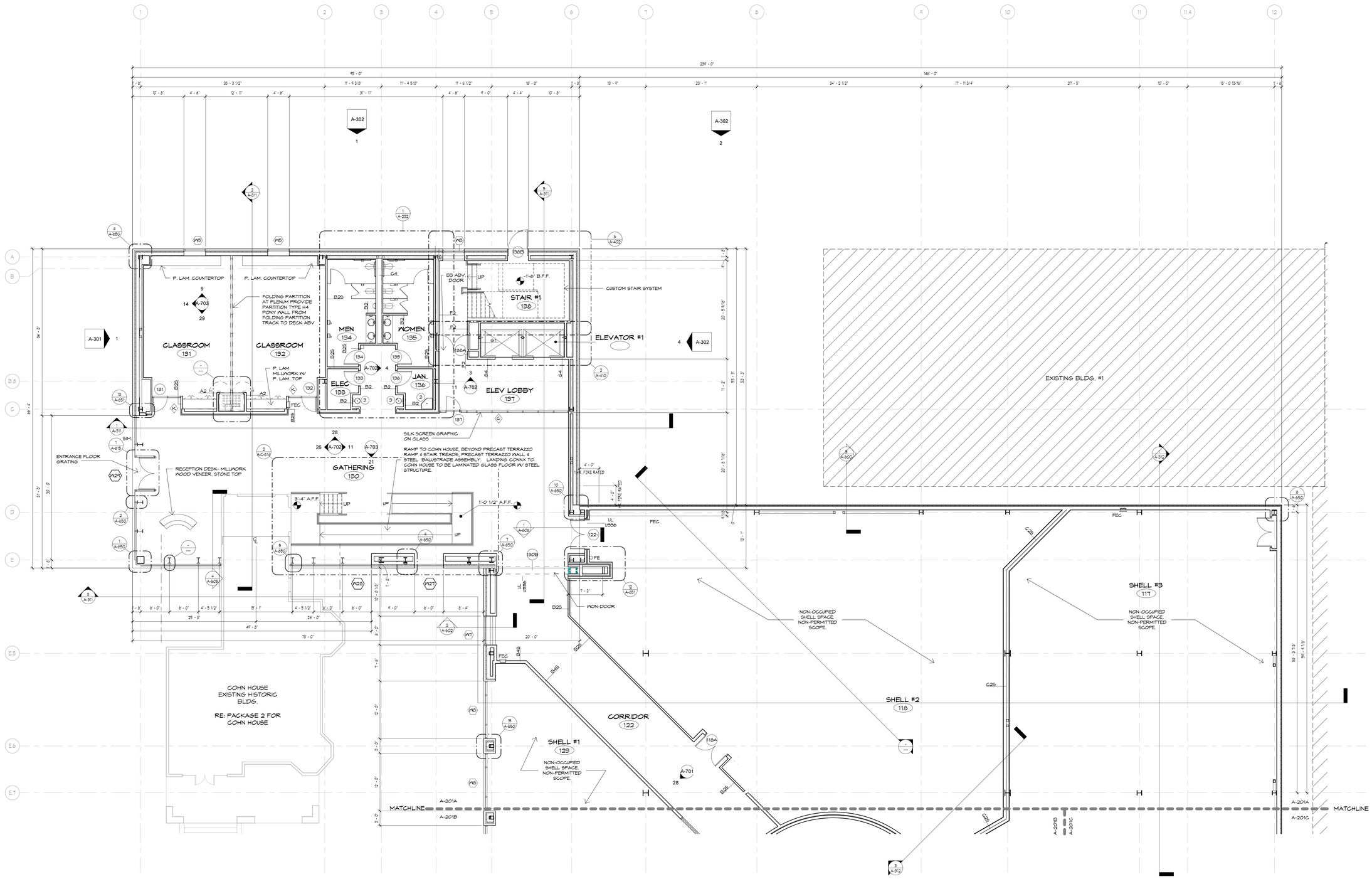

1 FLOOR PLAN - LEVEL 1 AREA A
1/8" = 1'-0"
RE: 1 A-301

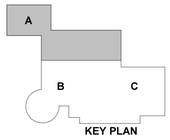

KEY PLAN

BAILEY ARCHITECTS
12 BASON DR. SUITE 420
PH:713.524.2155
Houston, TX 77007
FAX:713.524.3947
www.baileyarchitects.com

Consultants:

Walter P. Moore & Associates, Inc.
Civil Engineers
Cardno Haynes Whaley Assoc, Inc.
Structural Engineers
E&C Engineers & Consultants, Inc.
MEP Engineers
DataCom Design Group
Audio / Visual Consultant
Bos Lighting Design
Lighting Consultant
SLR International Corporation
Acoustics Consultant
The Office of James Burnett
Landscape Architects

REGISTERED ARCHITECT JOHN D. LEWIS 3594 STATE OF TEXAS
1/26/15

NAU CENTER FOR TEXAS CULTURAL HERITAGE

PACKAGE 1

1801 Capitol St.
Houston, Texas

Issue	Date	Description
	1/26/15	Permit and Pricing

PROJECT NO.: 13022
FILE:
DRAWN BY: Author
CHECKED BY: Checker
COPYRIGHT: © Bailey Architects 2015

Sheet Title:

FLOOR PLAN, LVL 1 AREA A

Sheet No:

A-201A

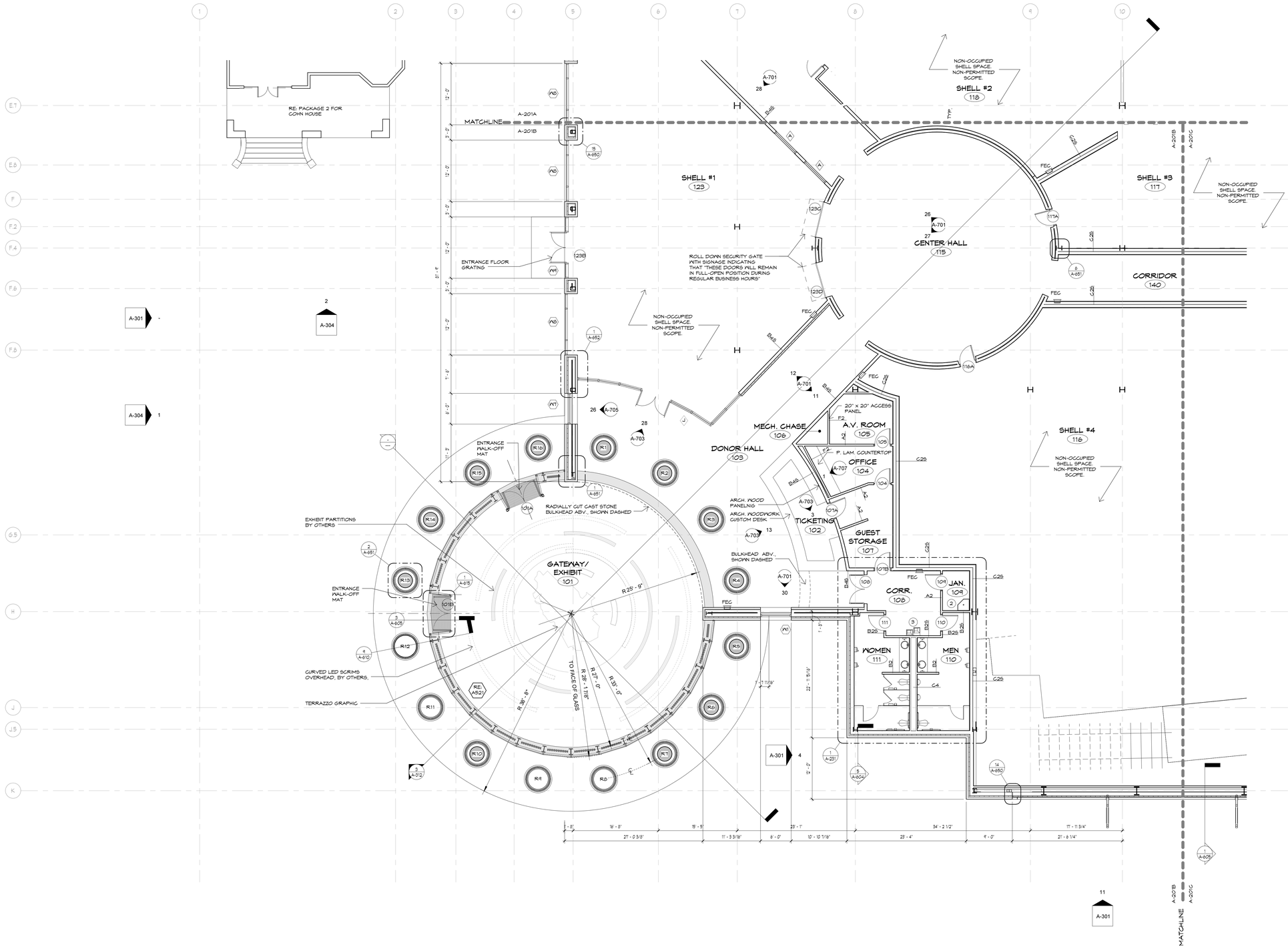

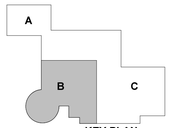

KEY PLAN

1 FLOOR PLAN - LEVEL 1 AREA B
1/8" = 1'-0"
RE: 1 A-301

BAILEY ARCHITECTS
5.5 BASON DR. SUITE 420
PH:713.524.2155
Houston, TX 77007
FAX:713.524.3947
www.baileyarchitects.com

Consultants:

Walter P. Moore & Associates, Inc.
Civil Engineers
Cardno Haynes Whaley Assoc, Inc.
Structural Engineers
E&C Engineers & Consultants, Inc.
MEP Engineers
DataCom Design Group
Audio Visual Consultant
Bos Lighting Design
Lighting Consultant
SLR International Corporation
Acoustics Consultant
The Office of James Burnett
Landscape Architects

REGISTERED ARCHITECT JAMES D. LEVACY 5594 STATE OF TEXAS
1/26/15

NAU CENTER FOR TEXAS CULTURAL HERITAGE

PACKAGE 1

1801 Capital St.

Houston, Texas

Issue	Date	Description
	1/26/15	Permit and Pricing

PROJECT NO.: 13022
FILE:
DRAWN BY: Author
CHECKED BY: Checker
COPYRIGHT: © Bailey Architects 2015

Sheet Title:

FLOOR PLAN, LVL 1 AREA B

Sheet No:

A-201B

GENERAL NOTES

1. -

KEY NOTES

1. WALL MTD EXIT SIGN
2. SIGNAGE ON FACE OF DOOR "NOT AN EMERGENCY EXIT. CONTINUE DOWN STEPS TO EMERGENCY EXIST FROM STAIRWAY."
3. PERMANENT

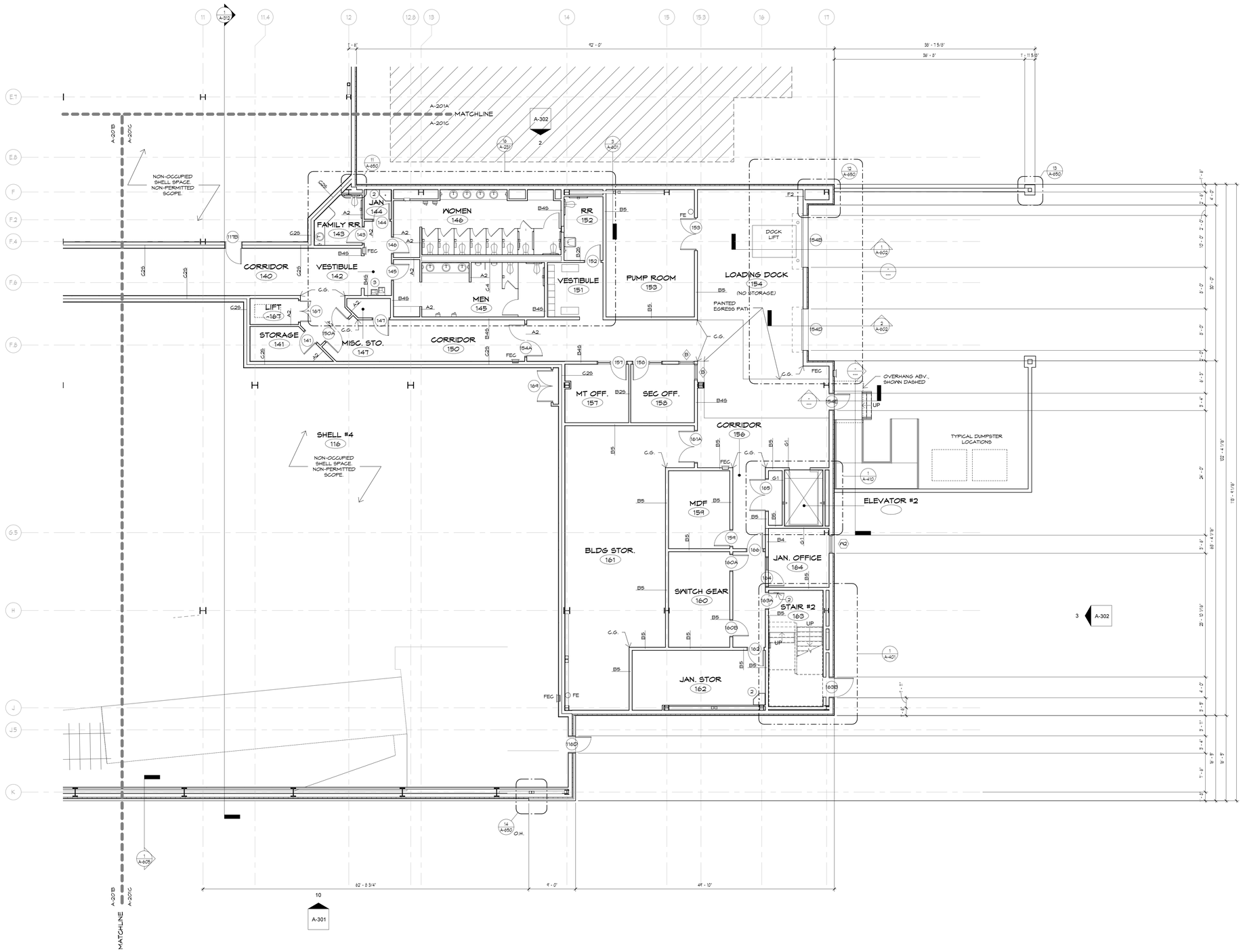

1 FLOOR PLAN - LEVEL 1 AREA C
1/8" = 1'-0"
RE: 1 A-301

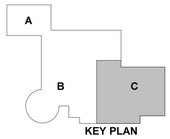

KEY PLAN

BAILEY ARCHITECTS
52 Baldwin Dr., Suite 420
Houston, TX 77007
PH: 713.524.2155
FAX: 713.524.3947
www.baileyarchitects.com

Consultants:

Walter P. Moore & Associates, Inc.
Civil Engineers
Cardno Haynes Whaley Assoc, Inc.
Structural Engineers
E&C Engineers & Consultants, Inc.
MEP Engineers
DataCom Design Group
Audio Visual Consultant
Bos Lighting Design
Lighting Consultant
SLR International Corporation
Acoustics Consultant
The Office of James Burnett
Landscape Architects

REGISTERED ARCHITECT JOHN D. LEIGH 25591 STATE OF TEXAS
1/26/15

NAU CENTER FOR TEXAS CULTURAL HERITAGE

PACKAGE 1

1801 Capitol St.

Houston, Texas

Issue	Date	Description
	1/26/15	Permit and Pricing

PROJECT NO.: 13022

FILE:

DRAWN BY: Author

CHECKED BY: Checker

COPYRIGHT: © Bailey Architects 2015

Sheet Title:

FLOOR PLAN, LVL 1 AREA C

Sheet No:

A-201C

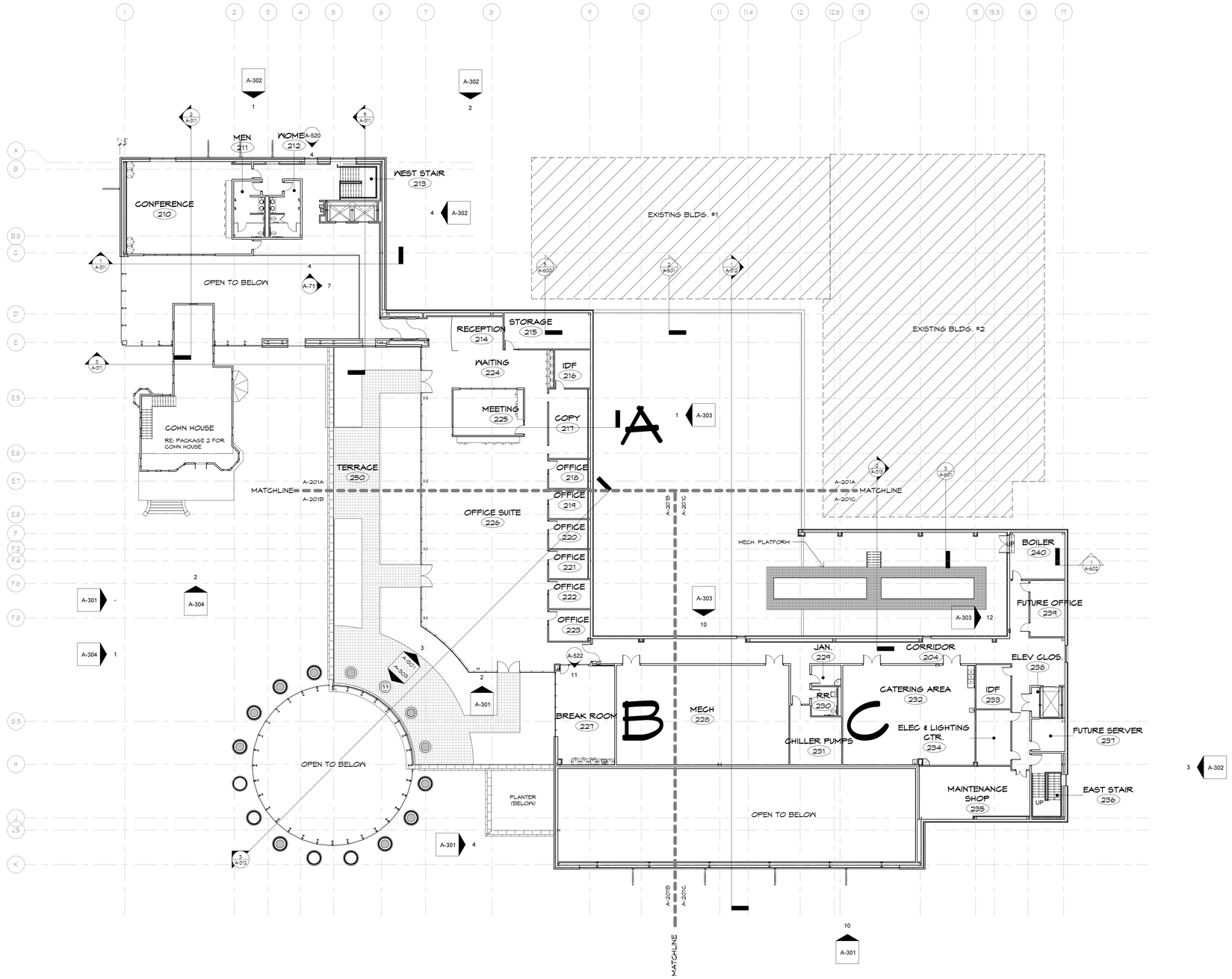

1 FLOOR PLAN - LEVEL 2
1/16" = 1'-0"
RE: 1 A-301

BAILEY ARCHITECTS
55 WAUGH DR. SUITE 450 Houston, TX 77007
PH:713.524.2150 FAX:713.524.3447
www.baileyarch.com

Consultants:

Walter P. Moore & Associates, Inc.
Civil Engineers
Cardno Haynes Whaley Assoc, Inc.
Structural Engineers
E&C Engineers & Consultants, Inc.
MEP Engineers
DataCom Design Group
Audio / Visual Consultant
Bos Lighting Design
Lighting Consultant
SLR International Corporation
Acoustics Consultant
The Office of James Burnett
Landscape Architects

REGISTERED ARCHITECT JAMES D. LEIMER 3591 STATE OF TEXAS
1/26/15

NAU CENTER FOR TEXAS CULTURAL HERITAGE

PACKAGE 1

1301 Capital St.
Houston, Texas

Issue	Date	Description
	1/26/15	Permit and Pricing

PROJECT NO.: 13022
FILE:
DRAWN BY: Author
CHECKED BY: Checker
COPYRIGHT: © Bailey Architects 2015

Sheet Title:

LEVEL TWO- COMPOSITE FLOOR PLAN

Sheet No:

A-202

ELEVATION KEYNOTES	
NUMBER	KEYNOTE
1	CAST STONE VENEER
3	COMPOSITE METAL WALL PANELS
5	CURTAINWALL SYSTEM #1
9	METAL COPING
15	COHN HOUSE EXISTING HISTORIC BLDG, RE: PACKAGE 2 FOR COHN HOUSE
22	CURTAINWALL SYSTEM #2

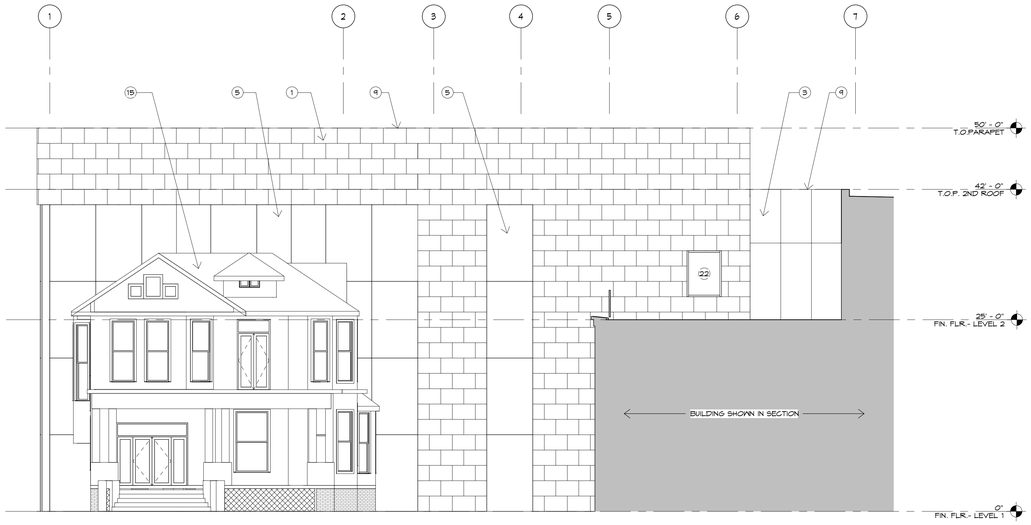

2 Elevation 16 - a
1/8" = 1'-0"
RE: 1 A-201

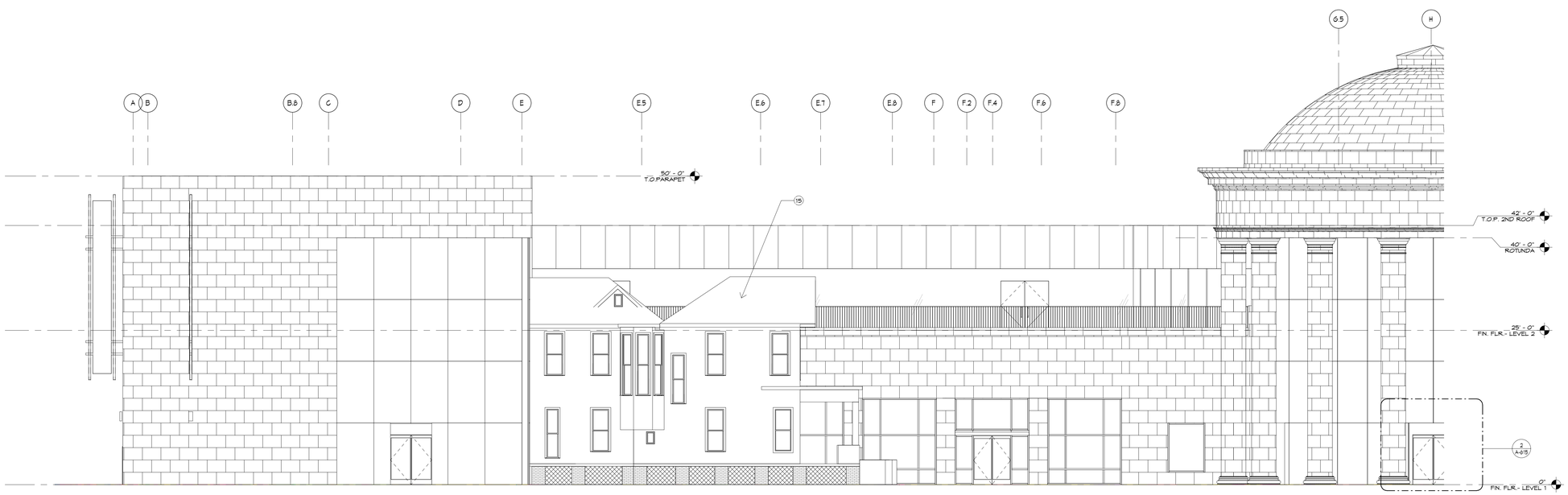

1 Copy of Elevation 12 - a
1/8" = 1'-0"
RE: 1 A-201

BAILEY ARCHITECTS
55 WAUGH DR. SUITE 450
Houston, TX 77007
PH:713.524.2100
FAX:713.524.3447
www.baileyarchitects.com

Consultants:

Walter P. Moore & Associates, Inc.
Civil Engineers
Cardno Haynes Whaley Assoc, Inc.
Structural Engineers
E&C Engineers & Consultants, Inc.
MEP Engineers
DataCom Design Group
Audio / Visual Consultant
Bos Lighting Design
Lighting Consultant
SLR International Corporation
Acoustics Consultant
The Office of James Burnett
Landscape Architects

REGISTERED ARCHITECT
RAMP O. LEYKER
3591
STATE OF TEXAS
1/26/15

NAU CENTER FOR TEXAS CULTURAL HERITAGE

PACKAGE 1

1801 Capitol St.
Houston, Texas

Issue	Date	Description
	1/26/15	Permit and Pricing

PROJECT NO.: 13022
FILE:
DRAWN BY: Author
CHECKED BY: Checker
COPYRIGHT: © Bailey Architects 2015

Sheet Title:

EXTERIOR ELEVATIONS

Sheet No:

A-304

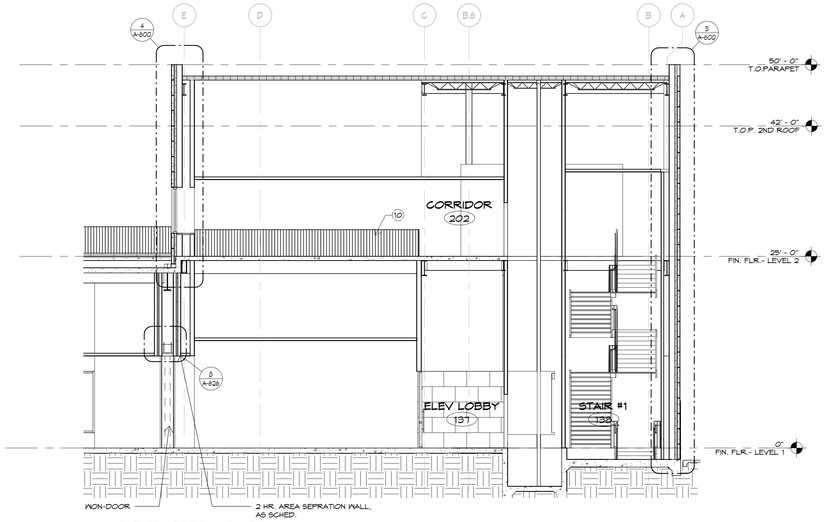

5 GATHERING LOOKING WEST
1/8" = 1'-0"
RE: 1 A-201

Keynote Legend- Section	
KEY NOTES	KEYNOTE
1	CAST STONE VENEER
2	STUCCO, REVEALS TBD
3	COMPOSITE METAL WALL PANELS
4	
5	CURTAINWALL SYSTEM #1
6	GLASS OCULUS
7	SERVICE YARD SCREENWALL - SPLIT-FACED CMU. PROVIDE GREEN SCREEN TRELLIS SYSTEM AT EXTERIOR FACE.
8	CAST STONE CAP
9	METAL COPING
10	PTD. STEEL GUARDRAIL
11	FLAT SEAM COPPER METAL PANEL ROOF
12	STRUCTURAL GLASS CANOPY
13	OVERHEAD COILING DOOR
14	DOOR
15	COHN HOUSE EXISTING HISTORIC BLDG. RE: PACKAGE 2 FOR COHN HOUSE
17	DECORATIVE ART FRIEZE
18	STRUCTURAL GLAZING CANOPY
21	BANNER BRACKETS
22	CURTAINWALL SYSTEM #2
23	LIGHT FIXTURE, REF. LIGHT FIXTURE SCHEDULE
24	PAINTED STEEL PIPE GUARDRAIL AND HANDRAIL

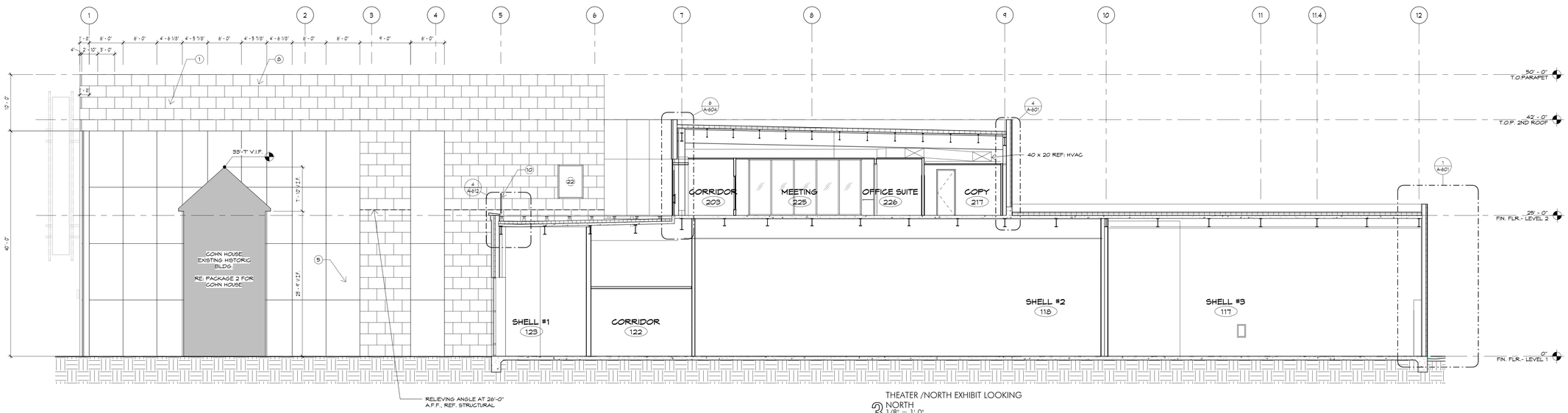

3 THEATER /NORTH EXHIBIT LOOKING NORTH
1/8" = 1'-0"
RE: 1 A-201

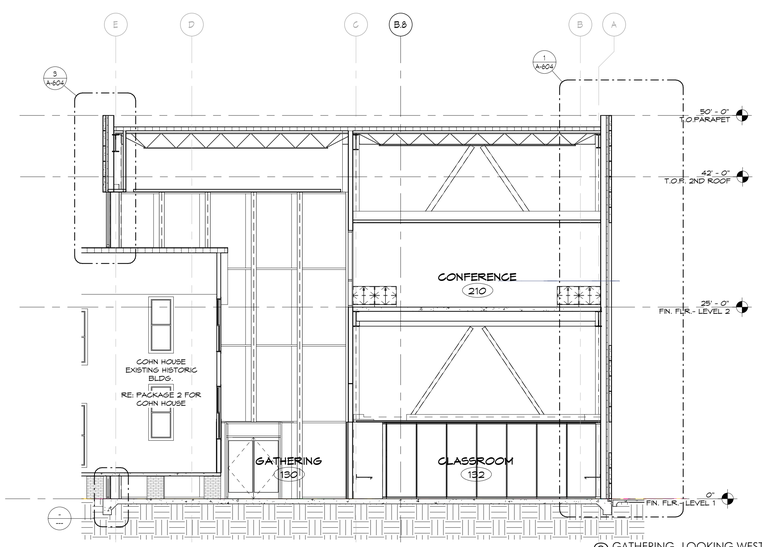

2 GATHERING- LOOKING WEST
1/8" = 1'-0"
RE: 1 A-201

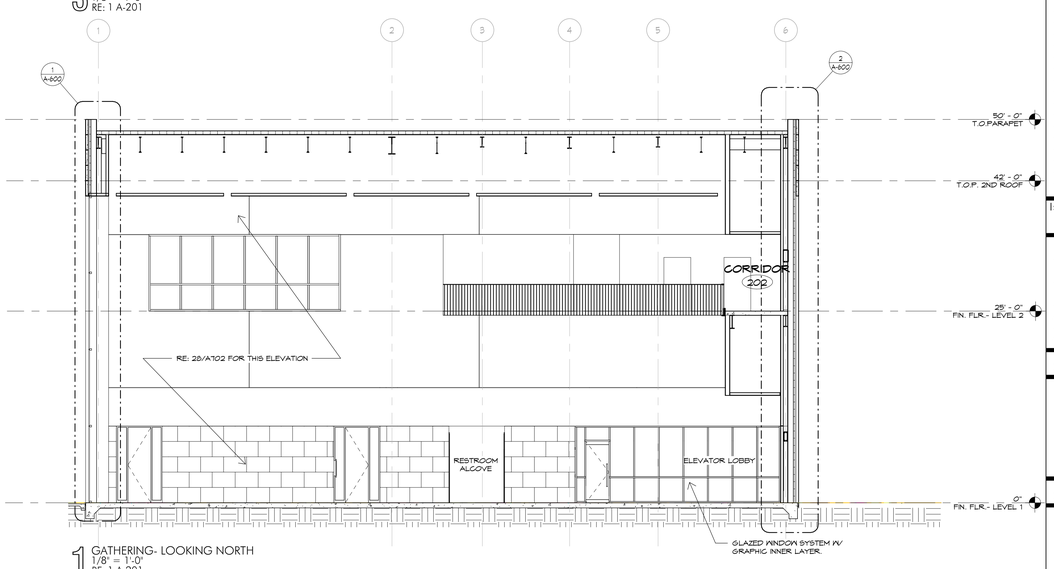

1 GATHERING- LOOKING NORTH
1/8" = 1'-0"
RE: 1 A-201

BAILEY ARCHITECTS
55 WAUGH DR. SUITE 450
Houston, TX 77007
PH:713.524.2150
FAX:713.524.3447
www.baileyarchitects.com

Consultants:

Walter P. Moore & Associates, Inc.
Civil Engineers
Cardno Haynes Whaley Assoc, Inc.
Structural Engineers
E&C Engineers & Consultants, Inc.
MEP Engineers
DataCom Design Group
Audio / Visual Consultant
Bos Lighting Design
Lighting Consultant
SLR International Corporation
Acoustics Consultant
The Office of James Burnett
Landscape Architects

REGISTERED ARCHITECT
RAY D. LEYENDECKER
25591
STATE OF TEXAS
1/26/15

NAU CENTER FOR TEXAS CULTURAL HERITAGE
PACKAGE 1

1801 Capitol St.
Houston, Texas

Issue	Date	Description
	1/26/15	Permit and Pricing

PROJECT NO.: 13022
FILE:
DRAWN BY: Author
CHECKED BY: Checker
COPYRIGHT: © Bailey Architects 2015

Sheet Title:
BUILDING SECTIONS

Sheet No:
A-311

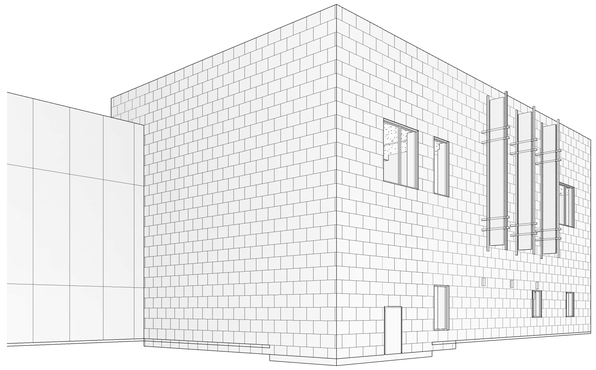

5 3D View 05
RE:

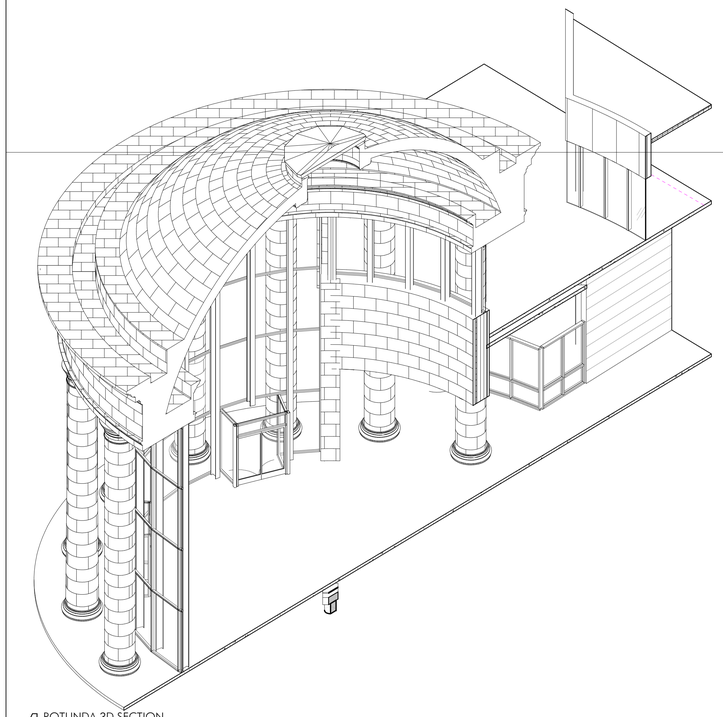

4 ROTUNDA 3D SECTION
RE:

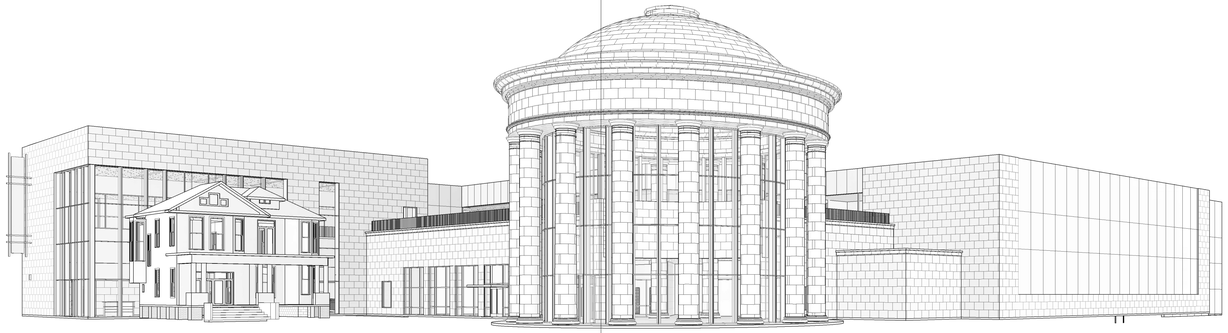

2 3D View 02
RE:

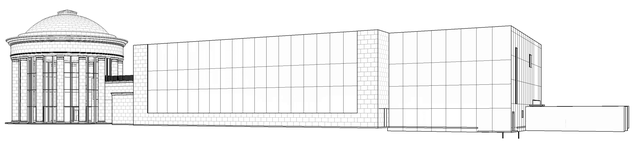

6 3D View 06
RE:

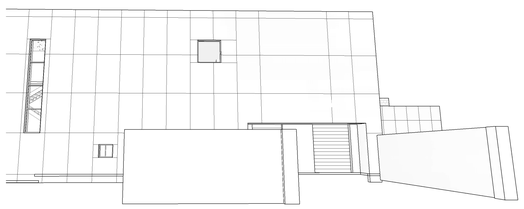

3 3D View 03
RE:

1 3D View 01
RE:

BAILEY ARCHITECTS
12 Waldon Dr., Suite 420
PH:713.524.2155
Houston, TX 77056
FAX:713.524.3947
www.baileyarchitects.com

Consultants:

Walter P. Moore & Associates, Inc.
Civil Engineers
Cardno Haynes Whaley Assoc, Inc.
Structural Engineers
E&C Engineers & Consultants, Inc.
MEP Engineers
DataCom Design Group
Audio Visual Consultant
Bos Lighting Design
Lighting Consultant
SLR International Corporation
Acoustics Consultant
The Office of James Burnett
Landscape Architects

REGISTERED ARCHITECT
JAMES D. LEIMER
3599
STATE OF TEXAS
1/26/15

NAU CENTER FOR TEXAS CULTURAL HERITAGE

PACKAGE 1

1801 Capital St.
Houston, Texas

Issue	Date	Description
	1/26/15	Permit and Pricing

PROJECT NO.: 13022
FILE:
DRAWN BY: Author
CHECKED BY: Checker
COPYRIGHT: © Bailey Architects 2015

Sheet Title:

EXTERIOR 3D VIEWS

Sheet No:

A-321

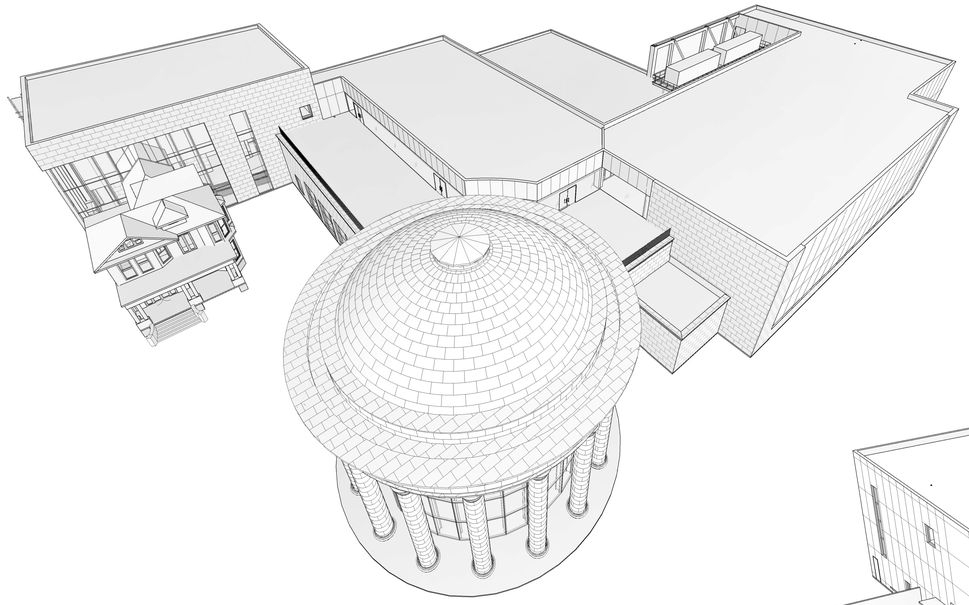

1 3D J S bird's eye
RE:

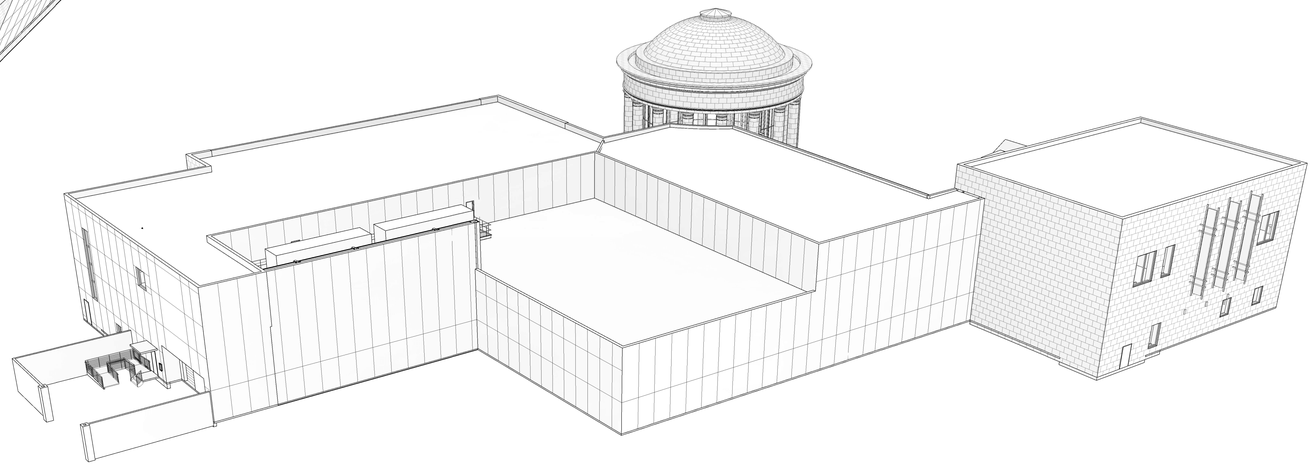

9 3D J NE top view
RE:

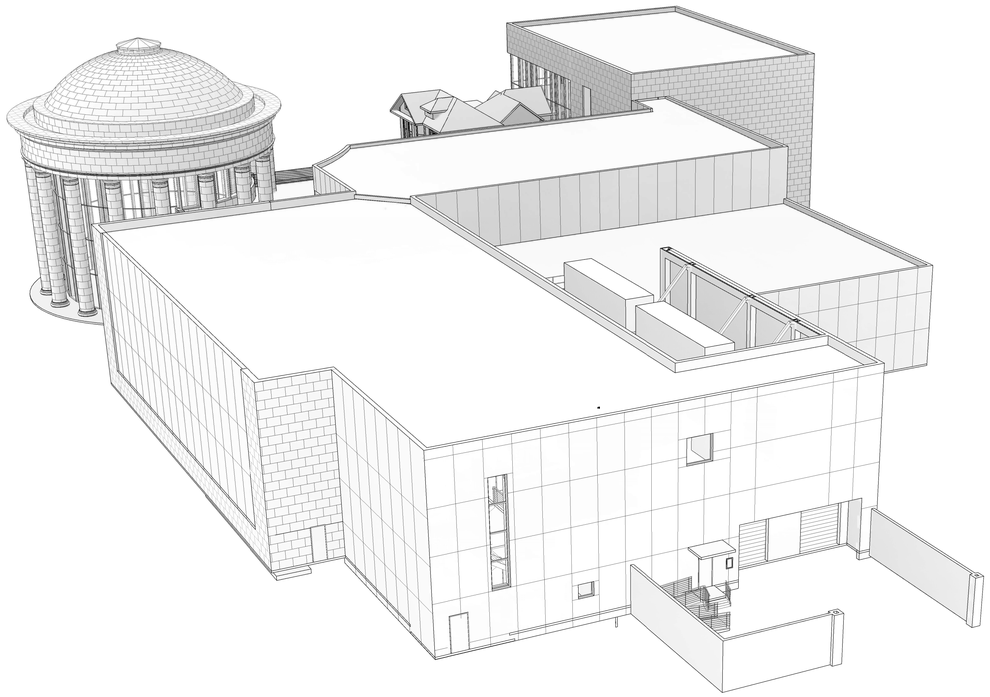

8 3D J SE top view
RE:

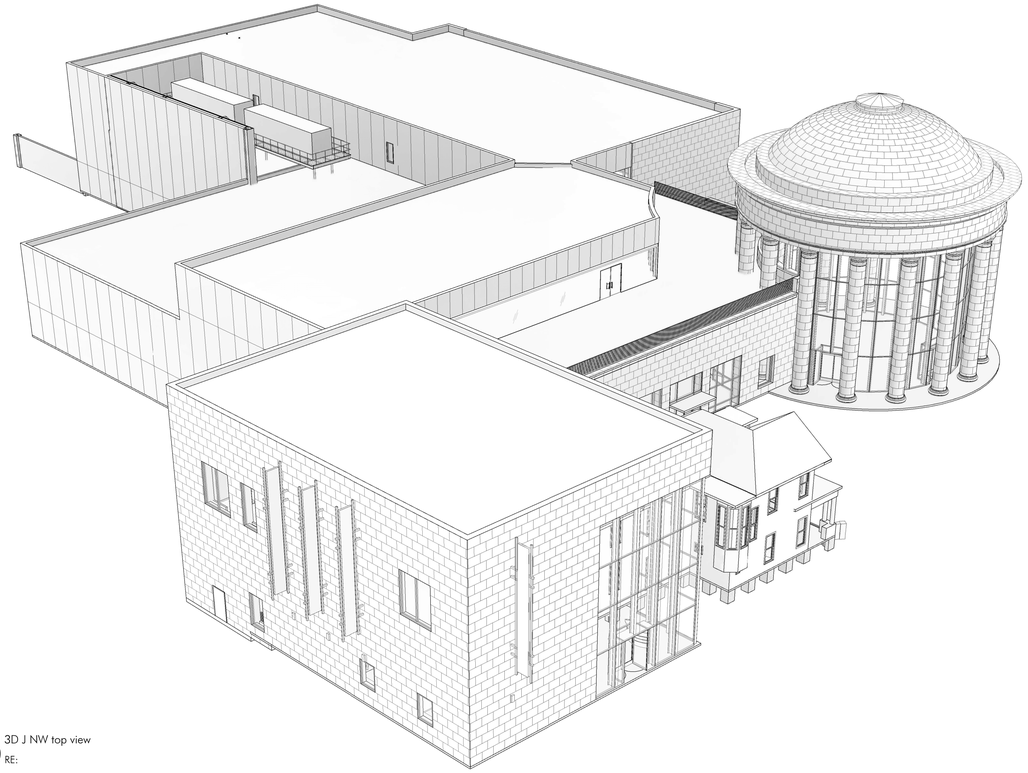

5 3D J NW top view
RE:

BAILEY ARCHITECTS

55 WAUGH DR. SUITE 450
PH:713.524.2155

Houston, TX 77019
FAX:713.524.3447

www.baileyarch.com

Consultants:

Walter P. Moore & Associates, Inc.
Civil Engineers
Cardno Haynes Whaley Assoc, Inc.
Structural Engineers
E&C Engineers & Consultants, Inc.
MEP Engineers
DataCom Design Group
Audio / Visual Consultant
Bos Lighting Design
Lighting Consultant
SLR International Corporation
Acoustics Consultant
The Office of James Burnett
Landscape Architects

REGISTERED ARCHITECT
JAMES D. LEIMER
5591
STATE OF TEXAS
1/26/15

NAU CENTER FOR TEXAS CULTURAL HERITAGE

PACKAGE 1

1801 Capitol St.

Houston, Texas

Issue	Date	Description
	1/26/15	Permit and Pricing

PROJECT NO.: 13022

FILE:

DRAWN BY: Author

CHECKED BY: Checker

COPYRIGHT: © Bailey Architects 2015

Sheet Title:

EXTERIOR 3D VIEWS

Sheet No:

A-322

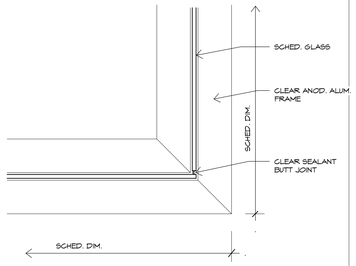

INTERIOR GLAZING CORNER

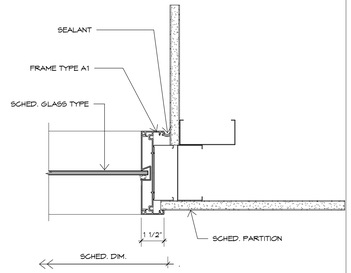

INTERIOR WINDOW JAMB @ CORNER COND.

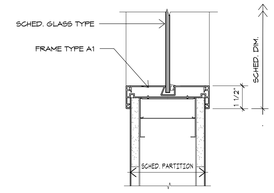

TYP. INTERIOR WINDOW SILL

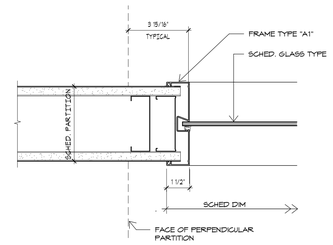

TYP. INTERIOR WINDOW JAMB

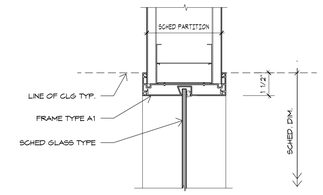

TYP. INTERIOR WINDOW HEAD

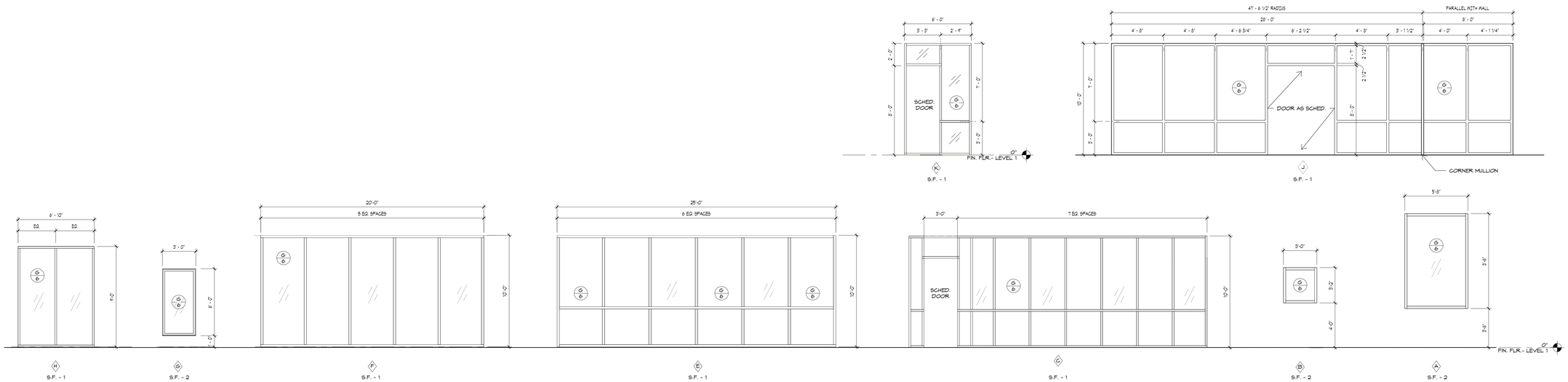

INTERIOR GLAZING

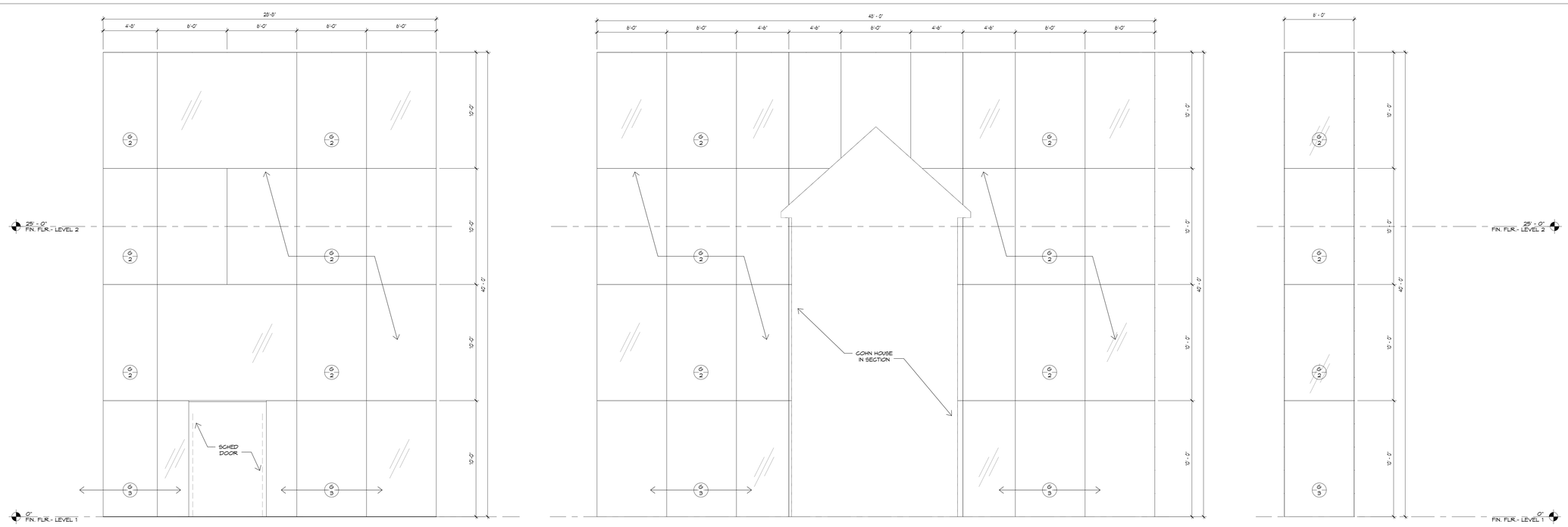

EXTERIOR GLAZING

BAILEY ARCHITECTS
55 WAUGH DR. SUITE 450
Houston, TX 77007
PH:713.524.2155
FAX:713.524.3447
www.baileyarchitects.com

Consultants:

Walter P. Moore & Associates, Inc.
Civil Engineers
Cardno Haynes Whaley Assoc, Inc.
Structural Engineers
E&C Engineers & Consultants, Inc.
MEP Engineers
DataCom Design Group
Audio / Visual Consultant
Bos Lighting Design
Lighting Consultant
SLR International Corporation
Acoustics Consultant
The Office of James Burnett
Landscape Architects

REGISTERED ARCHITECT JAY D. LEIMER 5591 STATE OF TEXAS
1/26/15

NAU CENTER FOR TEXAS CULTURAL HERITAGE

PACKAGE 1

1801 Capitol St.

Houston, Texas

Issue	Date	Description
	1/26/15	Permit and Pricing

PROJECT NO.: 13022
FILE:
DRAWN BY: Author
CHECKED BY: Checker
COPYRIGHT: © Bailey Architects 2015

Sheet Title:

WINDOW TYPES

Sheet No:

A-522

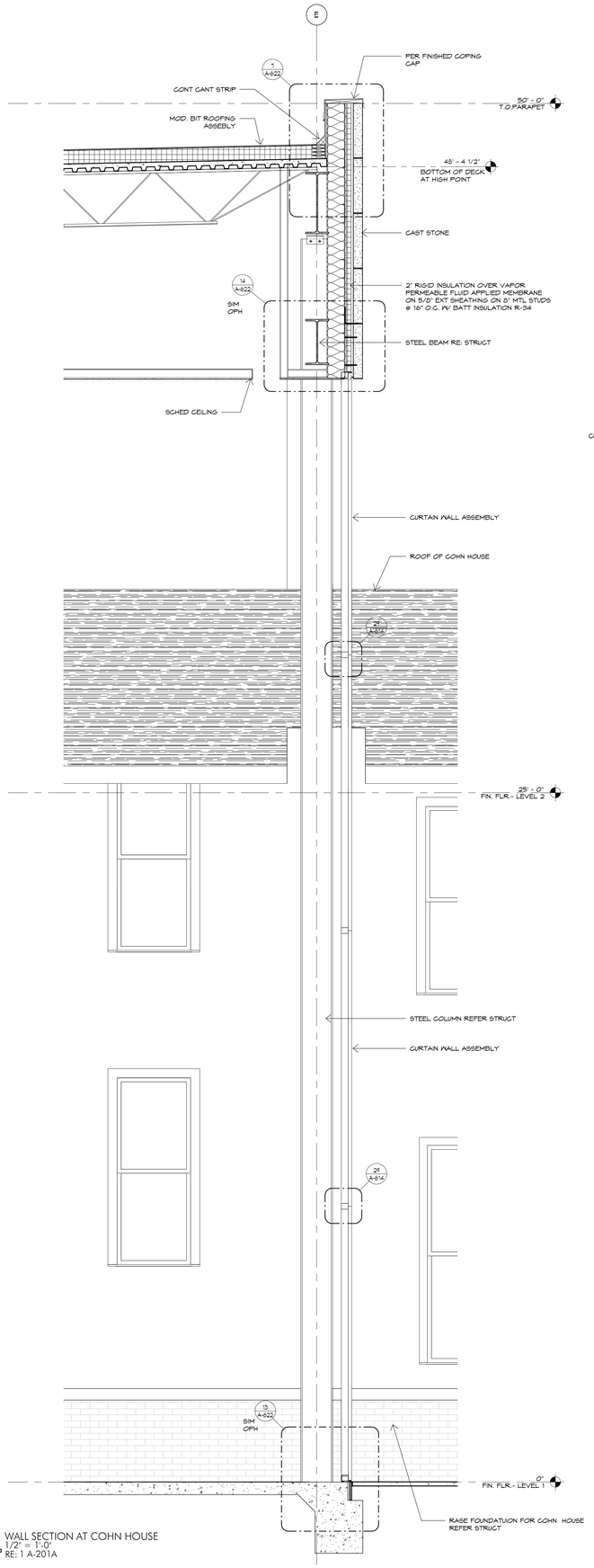

4 WALL SECTION AT COHN HOUSE
1/2" = 1'-0"
RE: 1 A-201A

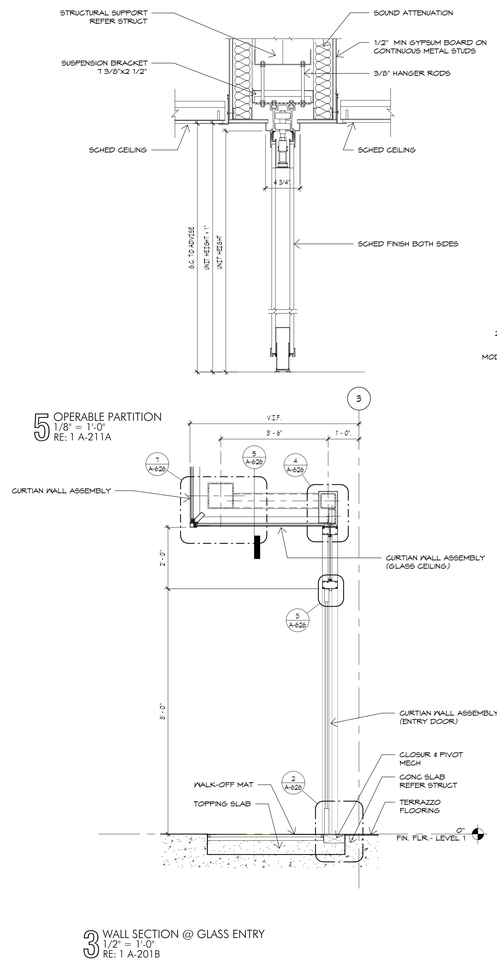

5 OPERABLE PARTITION
1/8" = 1'-0"
RE: 1 A-211A

3 WALL SECTION @ GLASS ENTRY
1/2" = 1'-0"
RE: 1 A-201B

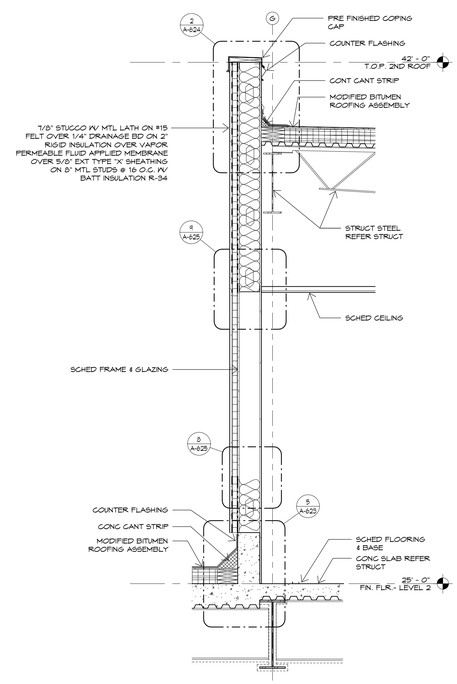

2 WALL SECTION
1/2" = 1'-0"
RE: 1 A-312

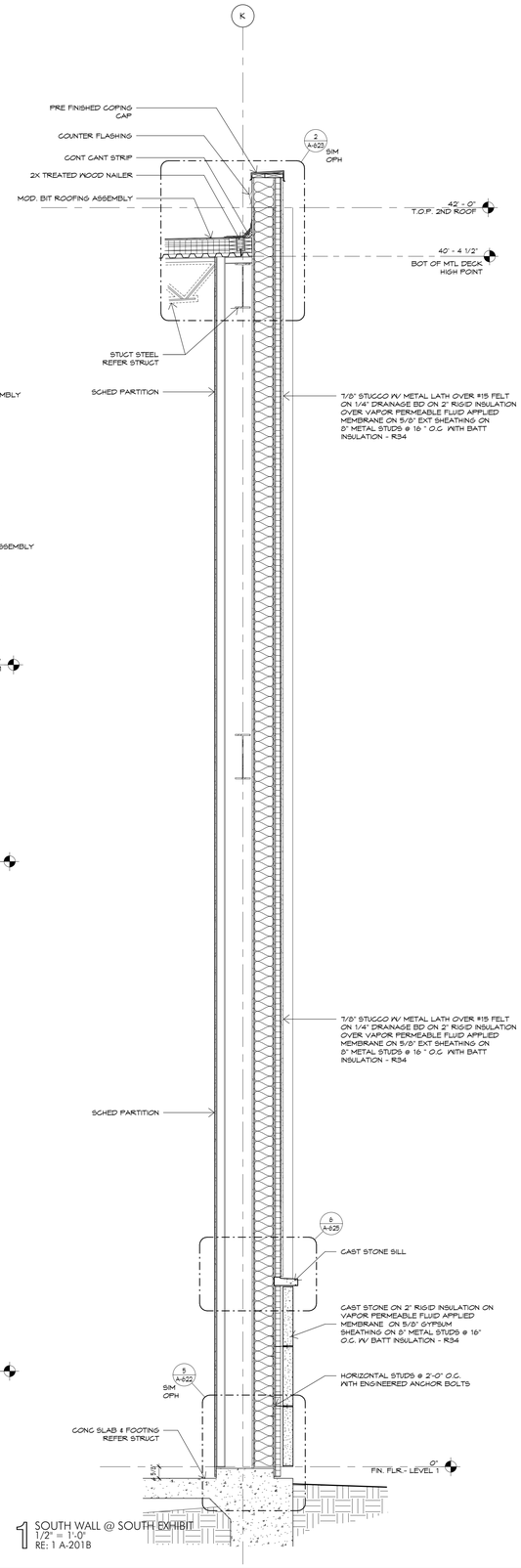

1 SOUTH WALL @ SOUTH EXHIBIT
1/2" = 1'-0"
RE: 1 A-201B

BAILEY ARCHITECTS
55 MAIGAR DR. SUITE 450
HOUSTON, TX 77024
TEL: 713.524.2155
FAX: 713.524.3447
WWW.BAILEYARCHITECTS.COM

Consultants:

Walter P. Moore & Associates, Inc.
Civil Engineers
Cardno Haynes Whaley Assoc, Inc.
Structural Engineers
E&C Engineers & Consultants, Inc.
MEP Engineers
DataCom Design Group
Audio / Visual Consultant
Bos Lighting Design
Lighting Consultant
SLR International Corporation
Acoustics Consultant
The Office of James Burnett
Landscape Architects

REGISTERED ARCHITECT
JAMES D. LEITNER
25591
STATE OF TEXAS
1/26/15

NAU CENTER FOR TEXAS CULTURAL HERITAGE
PACKAGE 1

1801 Capitol St.
Houston, Texas

Issue	Date	Description
	1/26/15	Permit and Pricing

PROJECT NO.: 13022
FILE:
DRAWN BY: Author
CHECKED BY: Checker
COPYRIGHT: © Bailey Architects 2015

Sheet Title:

WALL SECTIONS

Sheet No:

A-605

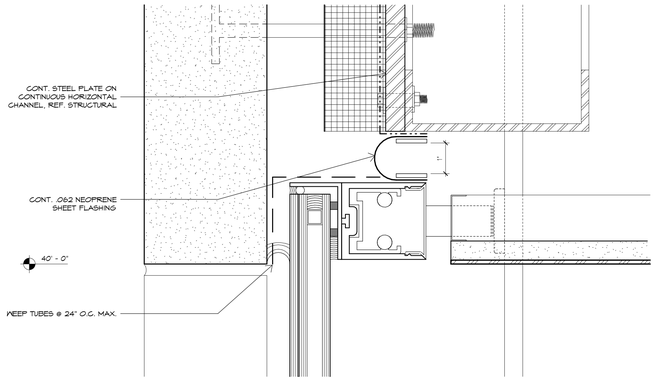

30 TYP. HEAD DTL. @ CURTAIN WALL
6" = 1'-0"
RE:

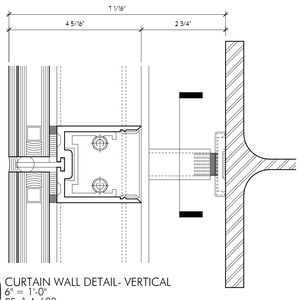

29 CURTAIN WALL DETAIL- VERTICAL
6" = 1'-0"
RE: 1 A-600

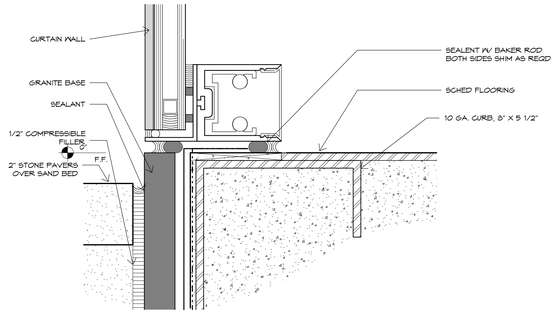

28 TYP. SILL DTL @ CURTAIN WALL
6" = 1'-0"
RE:

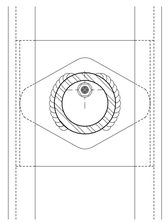

24 CURTAIN WALL DETAIL- VERTICAL ARM
12" = 1'-0"
RE: 29 A-614

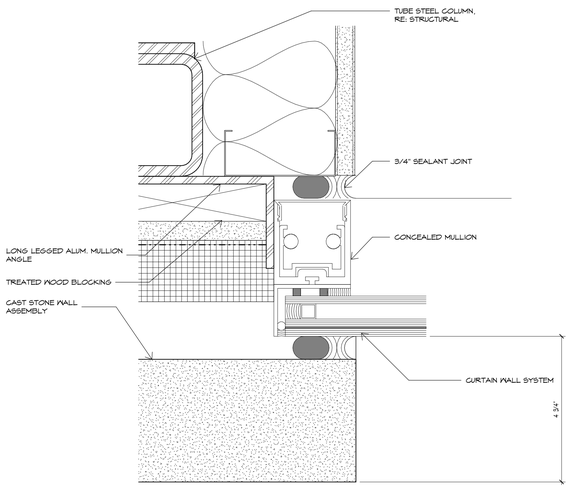

26 TYP. JAMB DTL @ CAST STONE WALL
6" = 1'-0"
RE:

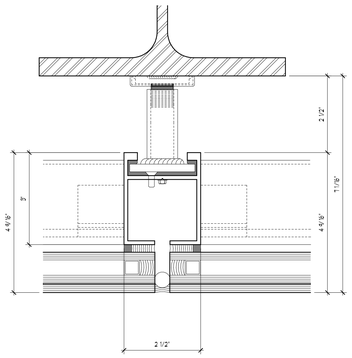

21 CURTAIN WALL DETAIL- HORIZONTAL
6" = 1'-0"
RE:

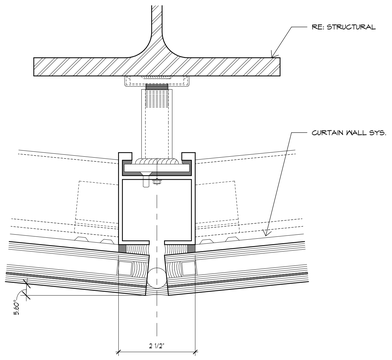

16 CURTAIN WALL DETAIL- HORIZONTAL FACET
6" = 1'-0"
RE: 1 A-615

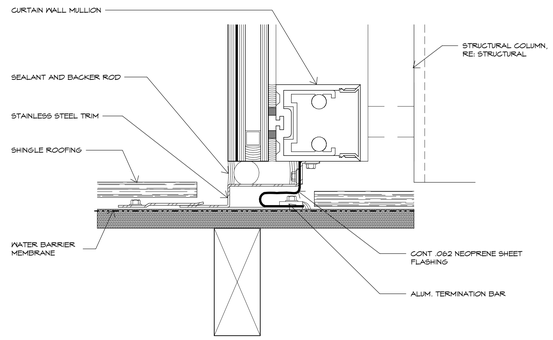

5 SEAL DTL @ COHN HOUSE ROOF
6" = 1'-0"
RE:

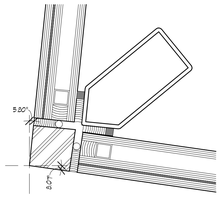

3 OUTSIDE CORNER DETAIL @ ENTRY DOORS
6" = 1'-0"
RE: 1 A-615

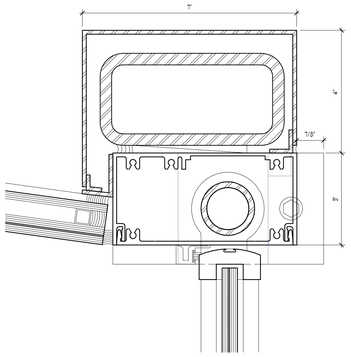

2 C.W. DTL @ ENTRY DOOR JAMB
6" = 1'-0"
RE: 1 A-615

BAILEY ARCHITECTS
55 WAUGH DR. SUITE 450
Houston, TX 77007
PH:713.524.2705
FAX:713.524.3447
www.baileyarch.com

Consultants:

Walter P. Moore & Associates, Inc.
Civil Engineers
Cardno Haynes Whaley Assoc, Inc.
Structural Engineers
E&C Engineers & Consultants, Inc.
MEP Engineers
DataCom Design Group
Audio / Visual Consultant
Bos Lighting Design
Lighting Consultant
SLR International Corporation
Acoustics Consultant
The Office of James Burnett
Landscape Architects

REGISTERED ARCHITECT
RAMP D. LEIKER
5591
STATE OF TEXAS
1/26/15

NAU CENTER FOR TEXAS CULTURAL HERITAGE
PACKAGE 1
1801 Capitol St.
Houston, Texas

Issue	Date	Description
	1/26/15	Permit and Pricing

PROJECT NO.: 13022
FILE:
DRAWN BY: Author
CHECKED BY: Checker
COPYRIGHT: © Bailey Architects 2015

Sheet Title:
EXTERIOR DETAILS

Sheet No:
A-614

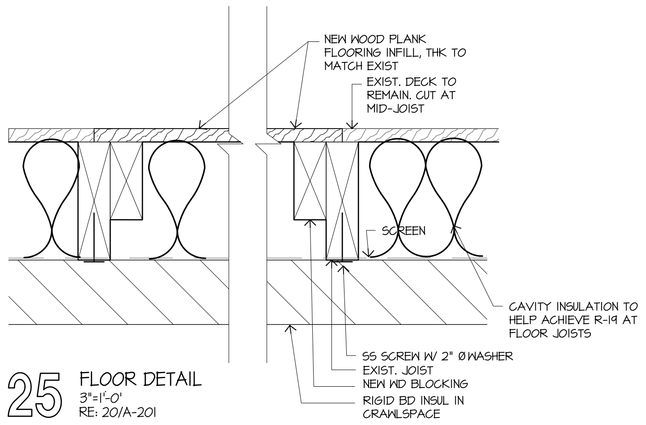

25 FLOOR DETAIL
3"=1'-0"
RE: 20/A-201

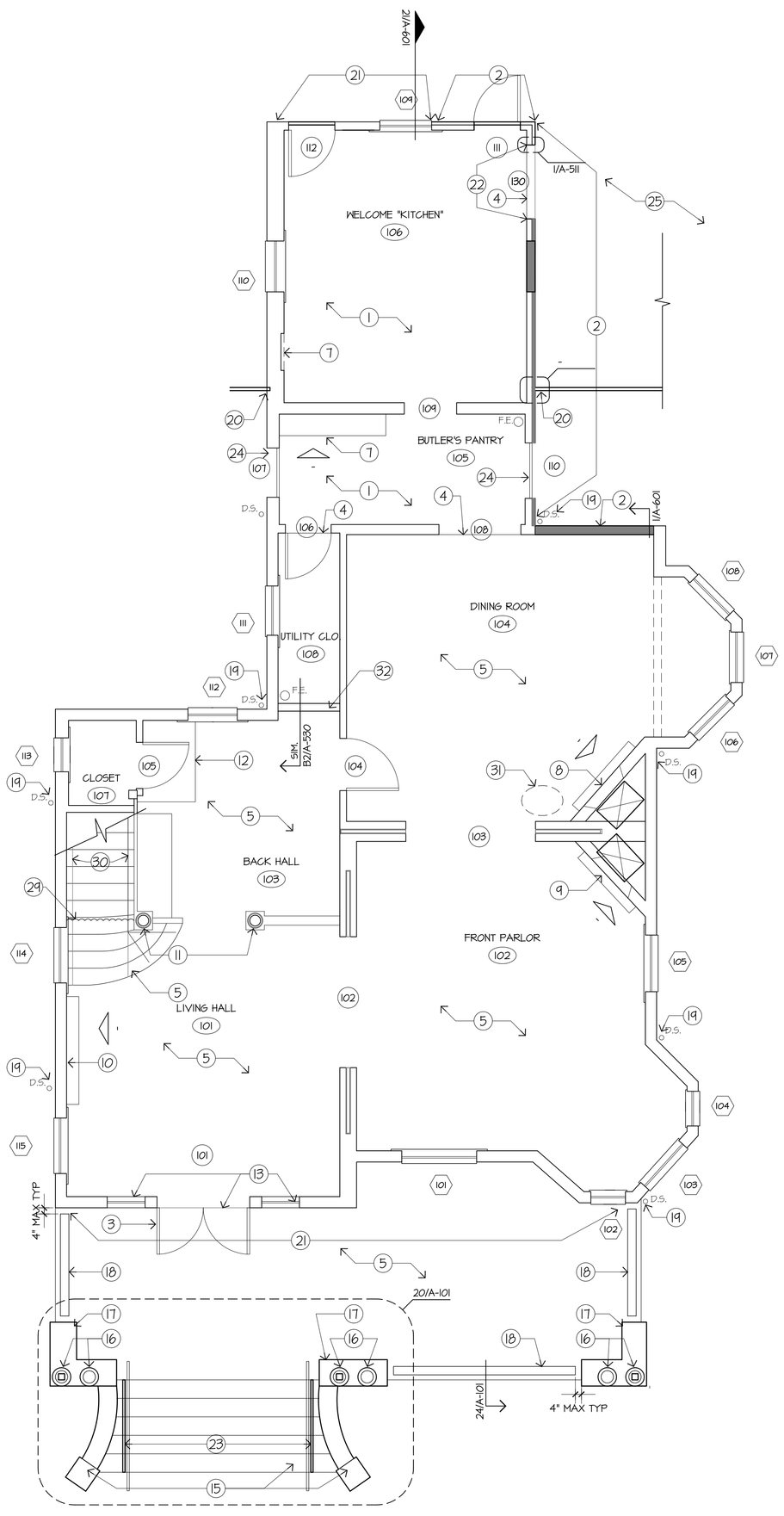

20 FIRST FLOOR PLAN
1/4"=1'-0"
RE: .

1/4"=1'-0" 0 2' 4' 8'

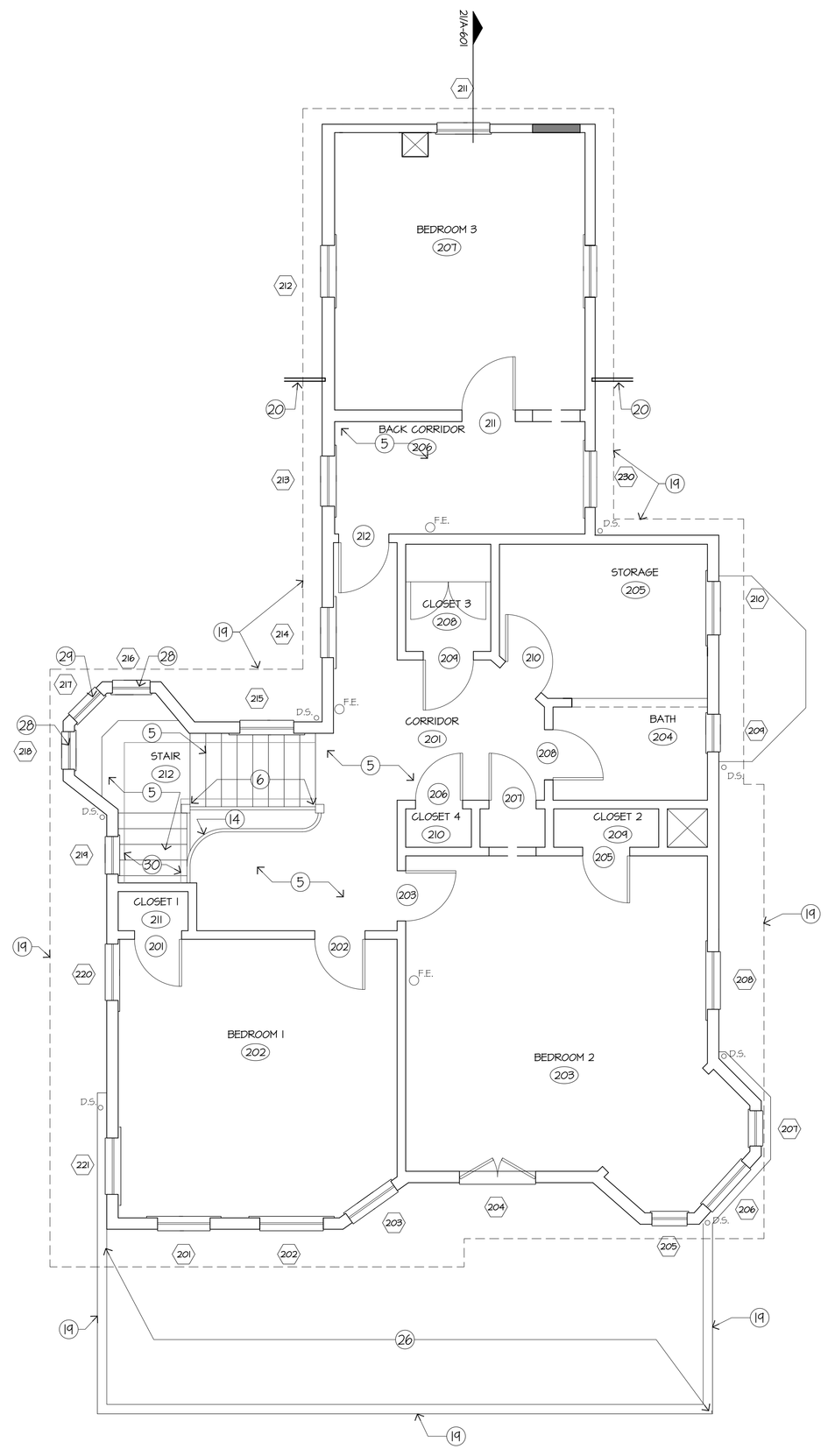

11 SECOND FLOOR PLAN
1/4"=1'-0"
RE: .

LEGEND

- NEW CONSTRUCTION
- EXIST. TO REMAIN
- EXISTING WINDOW
- ROOF EDGE ABOVE

GENERAL NOTES:

1. REFER TO A-023 FOR DEMO OF INTERIOR WD SHEATHING. INSTALL INSULATION TO EXTERIOR WALLS AND GYP BD TO ALL WALLS AND CEILINGS, TYP.
2. FILL AND REPAIR ALL HOLES FROM PREVIOUS EXTERIOR ATTACHMENTS TO DOORS AND WINDOWS.
3. PROTECT WOOD VARNISH ON ALL TRIM, FIREPLACE AND STAIR HANDRAIL IN ROOM 101. ALL NEW TRIM OR REPLACEMENT TRIM TO RECEIVE NEW VARNISH TYPICAL OF OTHER ROOMS.
4. COORDINATE FLOOR & CEILING AIR GRILLS W/ EXISTING FLOOR & CEILING FRAMING.

KEY NOTES:

1. PINE BOARD FLOORING OVER EXISTING SUBFLOOR.
2. WOOD SIDING. REFER TO A-301 FOR VARIOUS PLANK SIZES AND LOCATION, TYP. REFER TO 29/A-541 FOR TYPICAL EXTERIOR WALL.
3. REVERSE DOOR SWING.
4. THRESHOLD
5. REFINISH EXISTING WOOD FLOOR, TYP.
6. INSTALL (1) ONE SALVAGED NEWEL POST. INSTALL (1) ONE NEWEL POST TO MATCH EXISTING.
7. EXISTING MILLWORK. REFINISH WOODWORK, PUDDY GLAZING, ADJUST DOORS TO SLIDE FREELY AND DOORS TO SWING AND CLOSE WITH EXISTING HARDWARE.
8. ORNAMENTAL FIREPLACE NO. 1.REPLACE ROTTEN WOOD AT EXISTING FIREPLACE MANTEL. PROFILE TO MATCH EXISTING. REMOVE PAINT AND VARNISH. GROUT CRACKS IN HEARTH TILE. INSTALL CERAMIC TILE ON INSERT PANEL. COSMETIC REPAIRS TO FIREBOX ONLY. NOT A WORKING FIREPLACE.
9. ORNAMENTAL FIREPLACE NO. 2.REPLACE ROTTEN WOOD AT EXISTING FIREPLACE MANTEL. PROFILE TO MATCH EXISTING. GROUT CRACKS IN HEARTH TILE. INSTALL CERAMIC TILE AROUND FIREPLACE INSERT. COSMETIC REPAIRS TO FIREBOX ONLY. NOT A WORKING FIREPLACE.
10. ORNAMENTAL FIREPLACE NO. 3.INSTALL CERAMIC TILE ON INSERT PANEL.
11. LIGHT FIXTURE LOCATION, ORIG.
12. REPLACE DAMAGED ORNAMENTAL WOOD BELOW UPPER STAIR RUN.
13. INSTALL NEW GLAZING IN EXIST DOORS & SIDELIGHTS. RE: A-511.
14. GLUE WOOD VENEER AT SECOND FLOOR LANDING. SAND SURFACE SMOOTH AND FINISH TO MATCH ADJACENT. COMPLETE MOLDING ABOVE.
15. NEW CONCRETE STAIRS WITH EXIST. RUSTICATED CAST CONCRETE BLOCK SIDE SUPPORTS WITH CONCRETE TOP. VERIFY HEIGHTS BEFORE STEPS ARE POURED. RE: 20/A-101.
16. SALVAGED COLUMN COVER, NEW IONIC CAPITALS WITH NEW 4X4 WD POST SUPPORT. RE: STRUC FOR POST CONNECTION.
17. SALVAGED RUSTICATED CONCRETE MASONRY UNIT PILASTER, PTD, TYP.
18. GUARD RAIL 42" HIGH. REF: 24/A-101.
19. 6" O.G. GUTTER & 4" ROUND PTD MTL DOWNSPOUT, TYP.
20. INTERSECTION WITH NAU CENTER CURTAINWALL SYSTEM. REFER TO NAU CENTER CONSTRUCTION SET, REF: A-600 SERIES.
21. EXISTING SIDING TO REMAIN WITH NO WATERPROOF MEMBRANE.
22. SAW CUT OPENING TO BE EXPOSED. WOOD TRIM INFILL AT STUDS. LAYERS OF WALL CONSTRUCTION TO REMAIN EXPOSED.
23. STAINLESS STL. HANDRAILS RE: 28/A-101.
24. FIX DOOR IN PLACE. HISTORIC DOOR-USED TO BE AT D.R.
25. ACCESSIBLE LANDING, RAMP & HANDRAILS. REF: NAU CENTER PACKAGE.
26. BUILT UP MODIFIED BITUMEN ROOF. SLOPE TO GUTTERS. REF: A-221.
27. RESTORE AND INSTALL OWNER SALVAGED LEADED STAINED GLASS WINDOWS. INSTALL IN WD SASH. RE: A-541.
28. LEADED STAINED GLASS WINDOW IN WOOD SASH. RE: A-541.
29. VELVET ROPE W/ HOOK & EYE CLOSURE AT WALL AND NEWEL POST.
30. STAIR CARPET RUNNER 3'-0" WIDE WITH BRASS STAIR RODS AT EACH TREAD & AT BOTTOM OF RUN.
31. AREA OF WOOD FLOOR REPLACEMENT DUE TO WATER DAMAGE. RE: 25/A-201.
32. NEW PARTITION RE: A-530. MATCH EXISTING STANDING AND RUNNING TRIM.

BAILEY ARCHITECTS
12 BLUM DR., SUITE 420
PH:713.524.2100
Houston, TX 77007
FAX:713.524.3947
www.baileyarchitects.com

Consultants:

Walter P. Moore & Associates, Inc.
Civil Engineers
Cardno Haynes Whaley Assoc, Inc.
Structural Engineers
E&C Engineers & Consultants, Inc.
MEP Engineers
DataCom Design Group
Audio / Visual Consultant
Bos Lighting Design
Lighting Consultant
SLR International Corporation
Acoustics Consultant
The Office of James Burnett
Landscape Architects

REGISTERED ARCHITECT JOE D. LEIFESTE 11/26/15 STATE OF TEXAS

1/26/15

NAU CENTER FOR TEXAS CULTURAL HERITAGE
COHN HOUSE REHABILITATION
PACKAGE 2

1801 Capitol St.
Houston, Texas

Issue	Date	Description
	1/26/15	PERMIT & PRICING

PROJECT NO.: 13022
FILE: PATH
DRAWN BY: Author
CHECKED BY: Checker
COPYRIGHT: © Bailey Architects 2015

Sheet Title:

FLOOR PLANS

Sheet No:

A.c-201

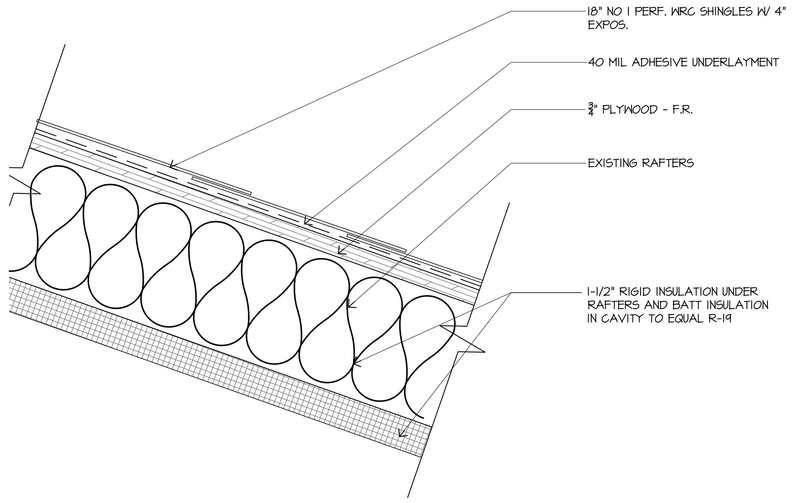

30 ROOF SYSTEM
1/4"=1'-0'
RE: .

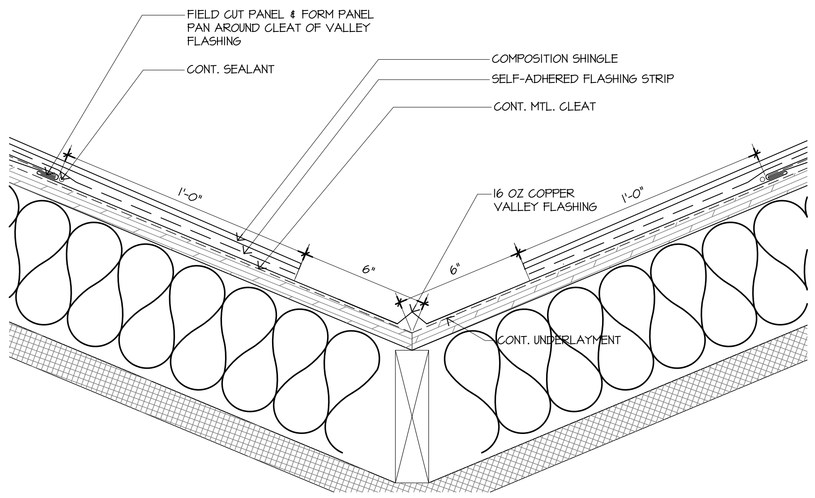

29 VALLEY FLASHING
1/4"=1'-0'
RE: .

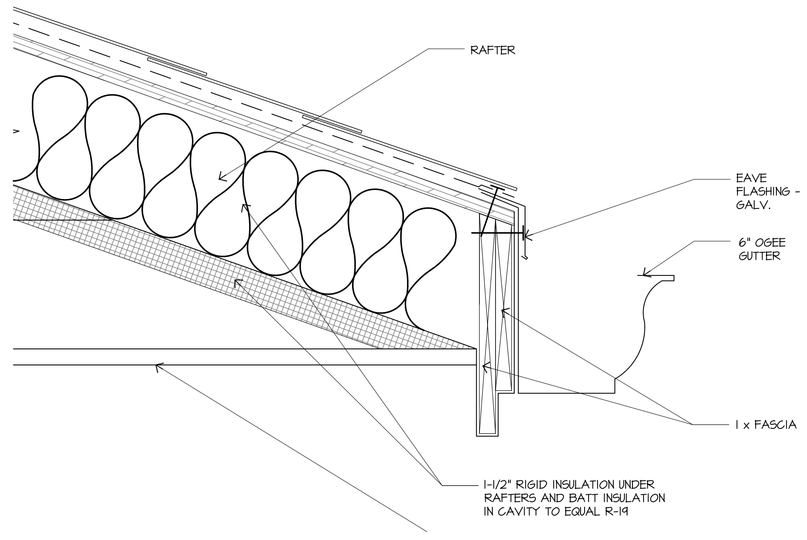

27 EAVE & GUTTER
1/4"=1'-0'
RE: .

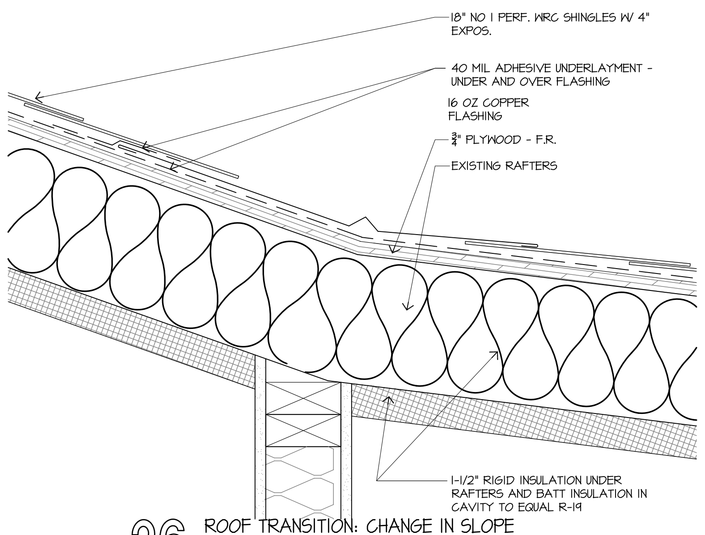

26 ROOF TRANSITION: CHANGE IN SLOPE
1/4"=1'-0'
RE: .

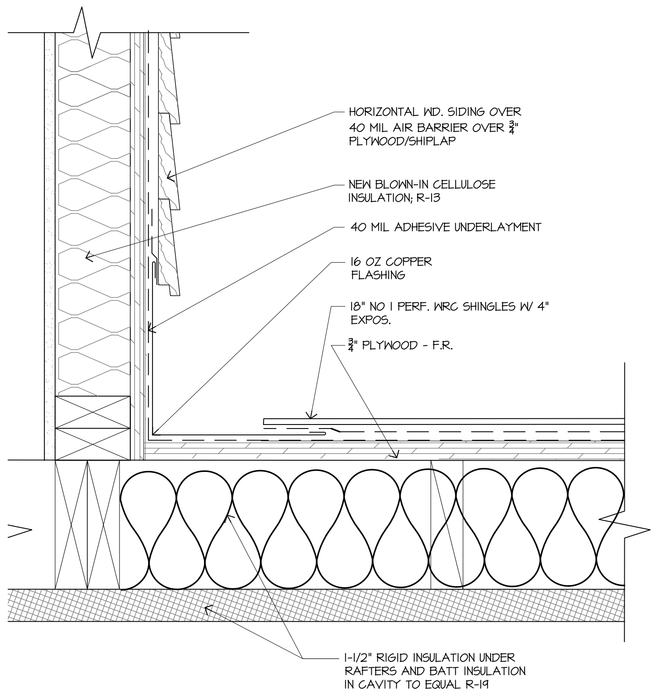

14 ROOF TRANSITION: WALL SIDING @ SHINGLE ROOFING
1/4"=1'-0'
RE: .

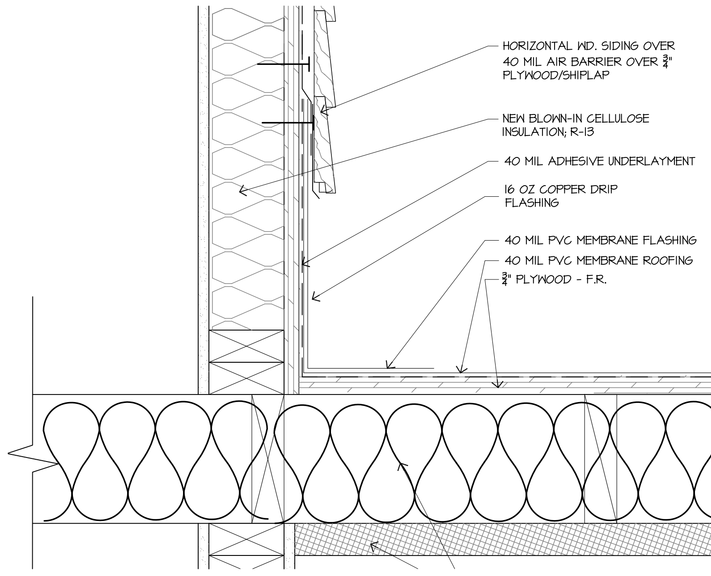

13 ROOF TRANSITION: WALL SIDING @ PVC ROOFING AND TAPERED INSULATION
1/4"=1'-0'
RE: .

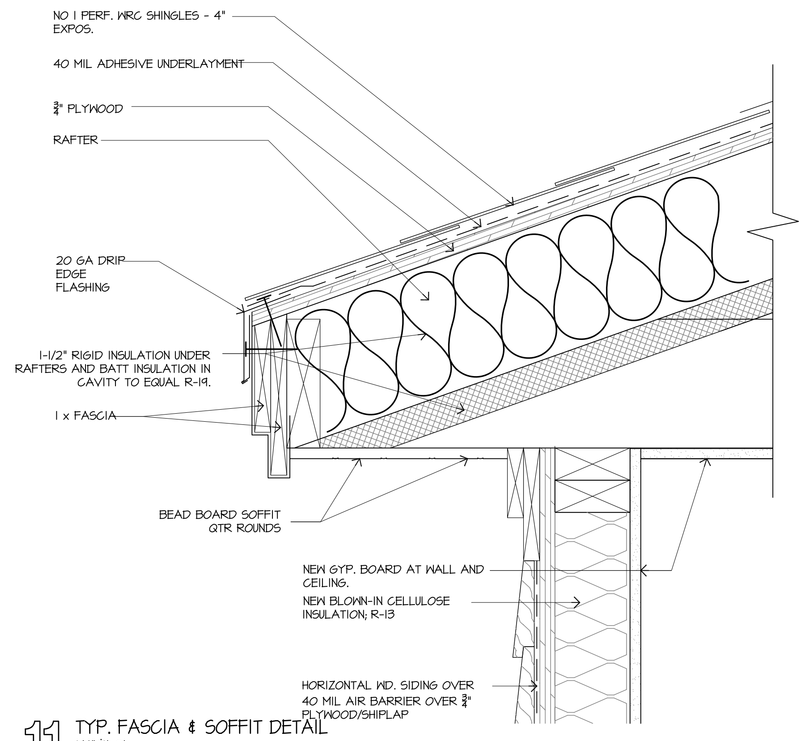

11 TYP. FASCIA & SOFFIT DETAIL
1/4"=1'-0'
RE: .

LEGEND

BUILDING WALL BELOW

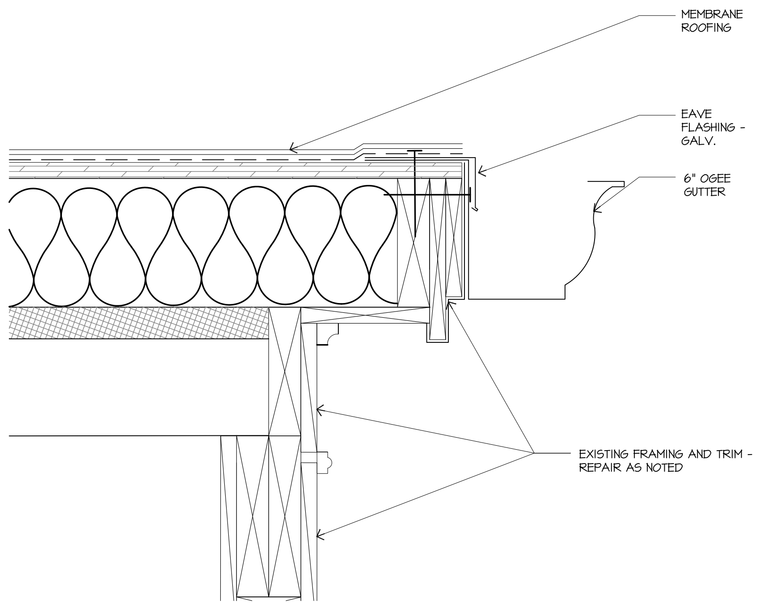

9 PORCH GUTTER
3"=1'-0'
RE: .

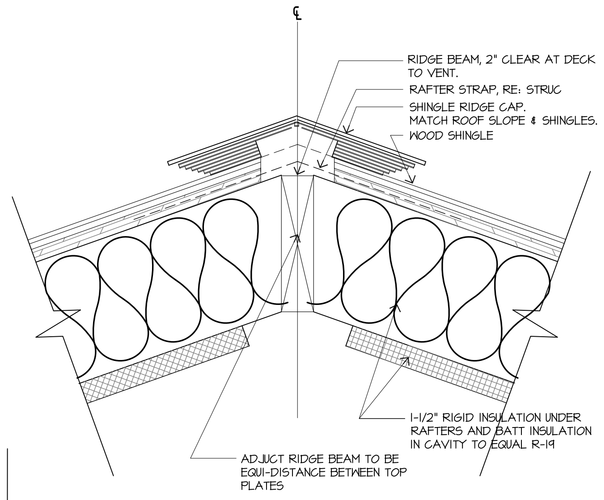

8 RIDGE / HIP VENT
3"=1'-0'
RE: .

GENERAL NOTES:

A.ROOF

1. REMOVE COMPOSITION SHINGLE ROOF SYSTEM AND PLYWOOD DECK.
2. INSTALL NEW ½A AC PLYWOOD DECK.
3. INSTALL NEW 40-MIL SELF-ADHESIVE AIR/MOISTURE BARRIER.
4. INSTALL NEW FIRE RETARDANT CEDAR SHINGLE ROOFING SYSTEM.
5. INSTALL R-19 RIGID BOARD INSULATION ON UNDERSIDE OF ROOF RAFTERS WITH FOIL FACE DOWN.

KEY NOTES:

1. ROOF TRANSITION - SHINGLES @ SINGLE-PLY MEMBRANE ROOF, TYP.
2. EXISTING CHIMNEY.
3. SHINGLED RIDGES AND HIPS
4. ATTIC VENT
5. NOT USED
6. ROOF PLAN - DTL. NO &SHT. - 6/A-221
7. NOT USED
8. RIDGE/HIP VENT
9. PORCH ROOF - PVC ROOF MEMBRANE SYSTEM W/ TAPERED INSULATION. SLOPE TO GUTTERS, TYP.
10. NOT USED
11. TYP. FACSIA & SOFFIT DETAIL
12. NOT USED
13. ROOF TRANSITION: SIDING @ PVC ROOF MEMBRANE SYSTEM W/ TAPERED INSULATION
14. ROOF TRANSITION: SIDING @ SHINGLE ROOF, TYP.
15 - 25. NOT USED
26. ROOF TRANSITION: CHANGE IN SLOPE @ SHINGLE ROOF, TYP.
27. EAVE W/ 6" OGEE PAINT GRIP GUTTER & DOWNSPOUT. REFER TO A-221 & A-301 FOR GUTTER & DOWNSPOUT LOCATIONS..
28. NOT USED
29. VALLEY FLASHING, TYP.
30. ROOF SYSTEM:PLYWOOD DECK AND FIRE RETARDANT CEDAR SHINGLE ROOFING SYSTEM, TYP.

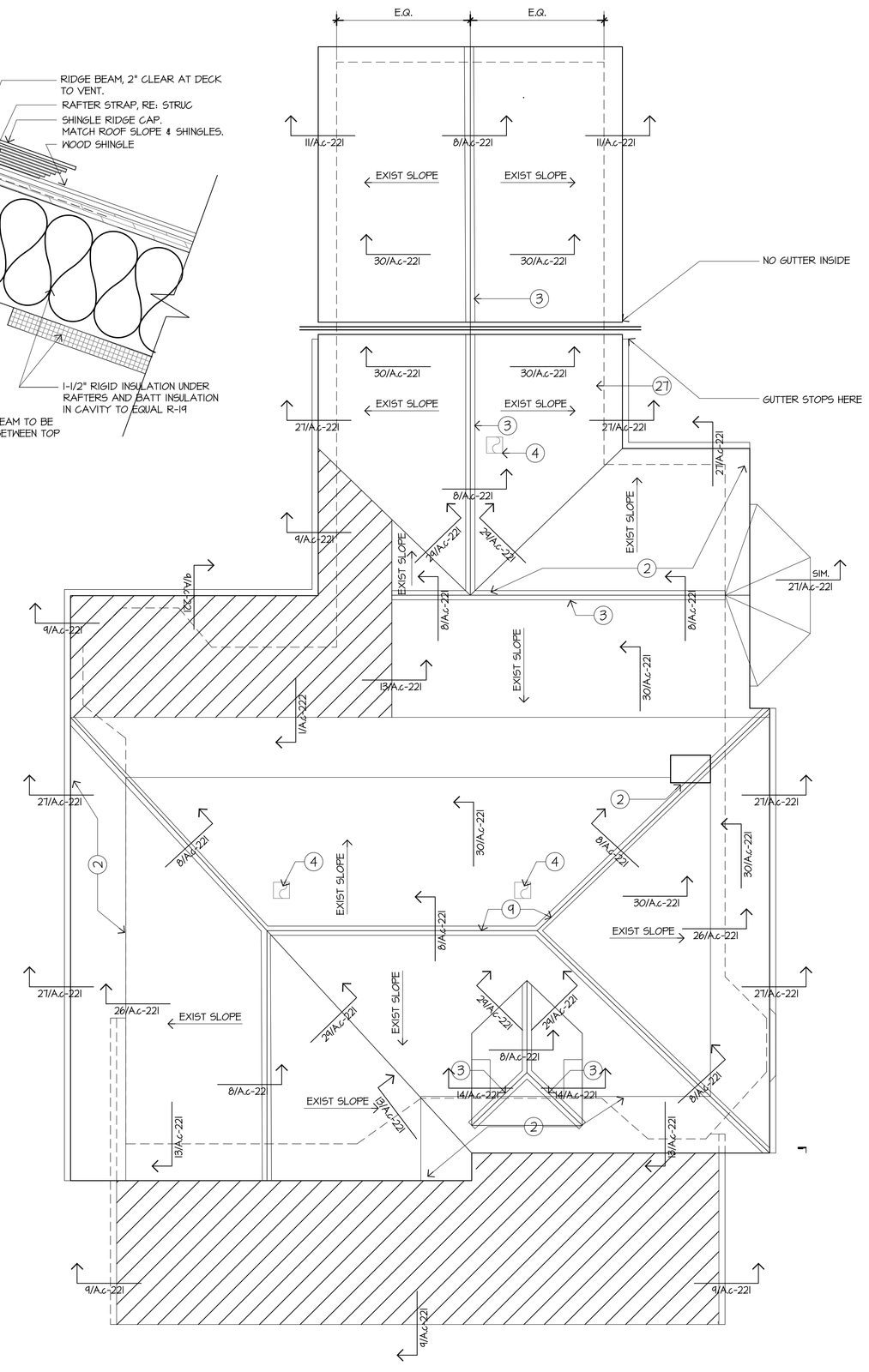

6 ROOF PLAN
1/4"=1'-0'
RE: .

N
1/4"=1'-0"
0 2' 4' 8'

BAILEY ARCHITECTS
12 BLUM DR. SUITE 420
PH:713.524.2150
Sugar Land, TX 77478
FAX:713.524.3947
www.baileyarchitects.com

Consultants:

Walter P. Moore & Associates, Inc.
Civil Engineers
Cardno Haynes Whaley Assoc, Inc.
Structural Engineers
E&C Engineers & Consultants, Inc.
MEP Engineers
DataCom Design Group
Audio Visual Consultant
Bos Lighting Design
Lighting Consultant
SLR International Corporation
Acoustics Consultant
The Office of James Burnett
Landscape Architects

REGISTERED ARCHITECT JAMES D. LEITCH 6591 STATE OF TEXAS
1/26/15

NAU CENTER FOR TEXAS CULTURAL HERITAGE
COHN HOUSE REHABILITATION
PACKAGE 2

1801 Capitol St.
Houston, Texas

Issue	Date	Description
	1/26/15	PERMIT & PRICING

PROJECT NO.: 13022
FILE: S:\13022 Nau Center\13022cfs\13022cad
DRAWN BY: Author
CHECKED BY: Checker
COPYRIGHT: © Bailey Architects 2015

Sheet Title:

ROOF PLAN

Sheet No:

A.c-221

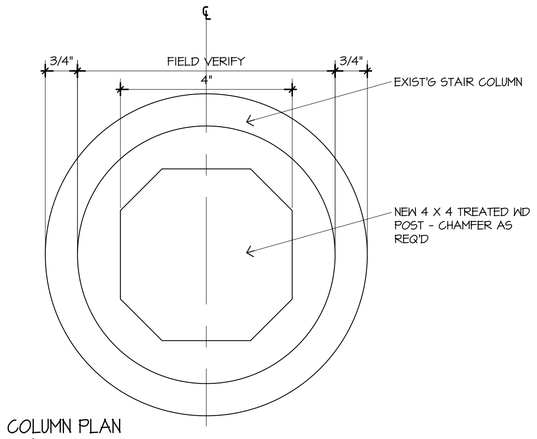

30 COLUMN PLAN
6"=1'-0"
RE: .

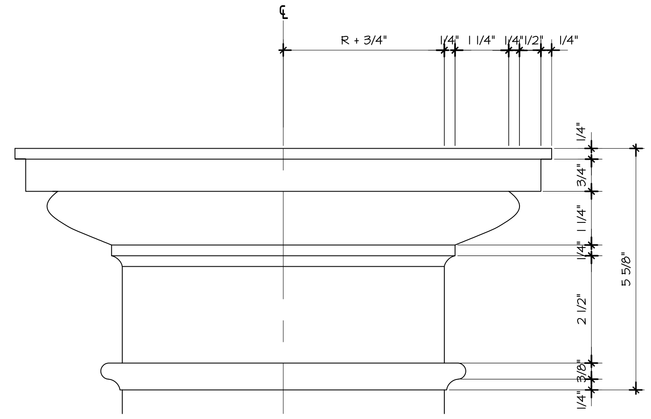

20 NEW COLUMN CAPITOL
6"=1'-0"
RE: .

GENERAL NOTES:

1. ELEVATION NAMES ARE BASED ON THE THEIR PLACEMENT PRIOR TO THE START OF CONSTRUCTION.
2. PROVIDE CMU PIERS, BRICK VENEER, GRADE BEAMS AND MUD SLAB FOUNDATION. REFER TO SIMILAR FOUNDATION IN PREVIOUS CONSTRUCTION DRAWINGS AVAILABLE FROM BAILEY ARCHITECTS.

NOTE:
DIMENSIONS ARE APPROXIMATE CONTRACTOR TO CONFIRM IN FIELD AFTER PLACEMENT OF THE HOUSE ON THE NEW SLAB.

KEY NOTES:

1. 4" WOOD SIDING TO MATCH EXISTING PROFILE FOUND AT DOOR 112.
2. 2" DOUBLE DROP WOOD SIDING TO MATCH EXISTING PROFILE NEAR WINDOW 201.
3. SALVAGED WINDOW UNIT FROM EXISTING WINDOW STOCK. REFER TO WINDOW SCHEDULE FOR REPAIRS.
4. DOOR AND GLASS TRANSOM WINDOW - NEW EXIST'T.
5. EXISTING LEADED GLASS WINDOWS FROM OWNER STORAGE.
6. ORNATE WD TRIM TO MATCH EXISTING TRIM ON EAST ELEVATION - 8/A301.
7. REPLACE WOOD FAUX STONE TRIM TO MATCH EXISTING - 20/A301.
8. WOOD FAUX STONE SIDING EXISTING TO REMAIN.
9. EXISTING CONCRETE RUSTICATED PLINTH. REPAIR.
10. SALVAGED COLUMNS, NEW CAPITOLS WITH 4X4 WD POST SUPPORT. RE: STRUC FOR POST CONNECTION.
11. FIRE RETARDANT CEDAR SHINGLE ROOFING SYSTEM & PLYWOOD DECK.
12. INTERSECTION WITH NAU CENTER BUILDING CURTAIN WALL SYSTEM . RE: XX
13. PIER W/ BRICK VENEER, TYP. RE: XX
14. CONCRETE GRADE BEAM & MUD SLAB. RE: STRUC.
15. RUSTICATED CONC MASONRY UNIT WITH PROFILED CAP AND CONCRETE STAIR WITH PROFILED CAP. PTD STEEL HANDRAIL.
16. POINT EXISTING CHIMNEY.
17. WOOD SPINDLE FLOOR MOUNTED GUARDRAIL. BRACE TO CONC BLOCK PLINTHS. RE: 17/A-101.
18. LANDING & RAMP.
19. CRAWLSPACE WOOD LATTICE OVER FIBER CEMENT PANELS BETWEEN ALL BRICK PIERS, TYP. VENTILATION AS REQUIRED.
20. EXPOSED SAWCUT OPENING. WOOD TRIM INFILL AT STUDS. LAYERS OF WALL CONSTRUCTION TO REMAIN EXPOSED.
21. GUTTER & DOWNSPOUT.
22. DOOR TRIM TO MATCH EXIST.
23. ORNAMENTAL FIREPLACE NO. 1.REPLACE ROTTEN WOOD AT EXISTING FIREPLACE MANTEL. PROFILE TO MATCH EXISTING. REMOVE PAINT AND VARNISH. GROUT CRACKS IN HEARTH TILE. INSTALL CERAMIC TILE ON INSERT PANEL. COSMETIC REPAIRS TO FIREBOX ONLY. NOT A WORKING FIREPLACE.
24. ORNAMENTAL FIREPLACE NO. 2.REPLACE ROTTEN WOOD AT EXISTING FIREPLACE MANTEL. PROFILE TO MATCH EXISTING. GROUT CRACKS IN HEARTH TILE. INSTALL CERAMIC TILE AROUND FIREPLACE INSERT. COSMETIC REPAIRS TO FIREBOX ONLY. NOT A WORKING FIREPLACE.
25. ORNAMENTAL FIREPLACE NO. 3.INSTALL CERAMIC TILE ON INSERT PANEL.

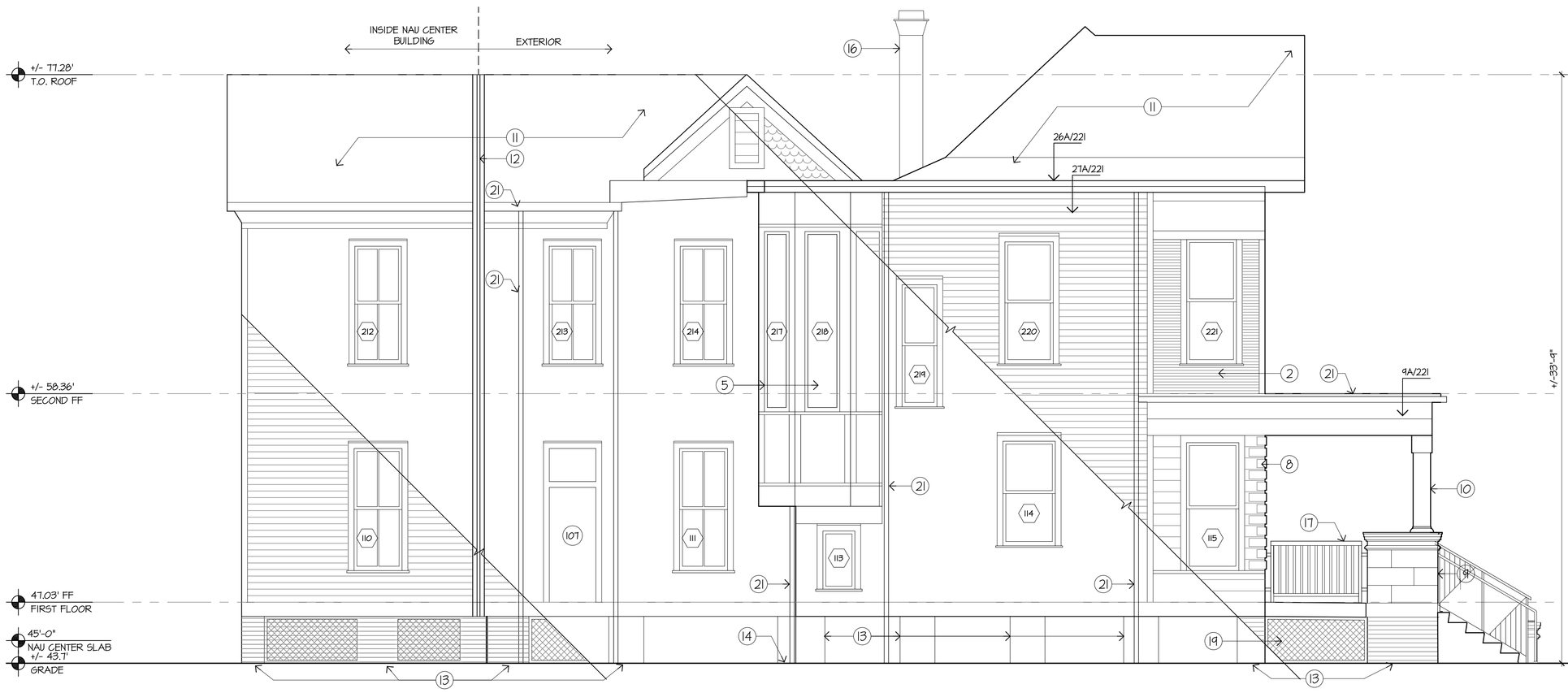

22 WEST ELEVATION
1/4"=1'-0"
RE: .

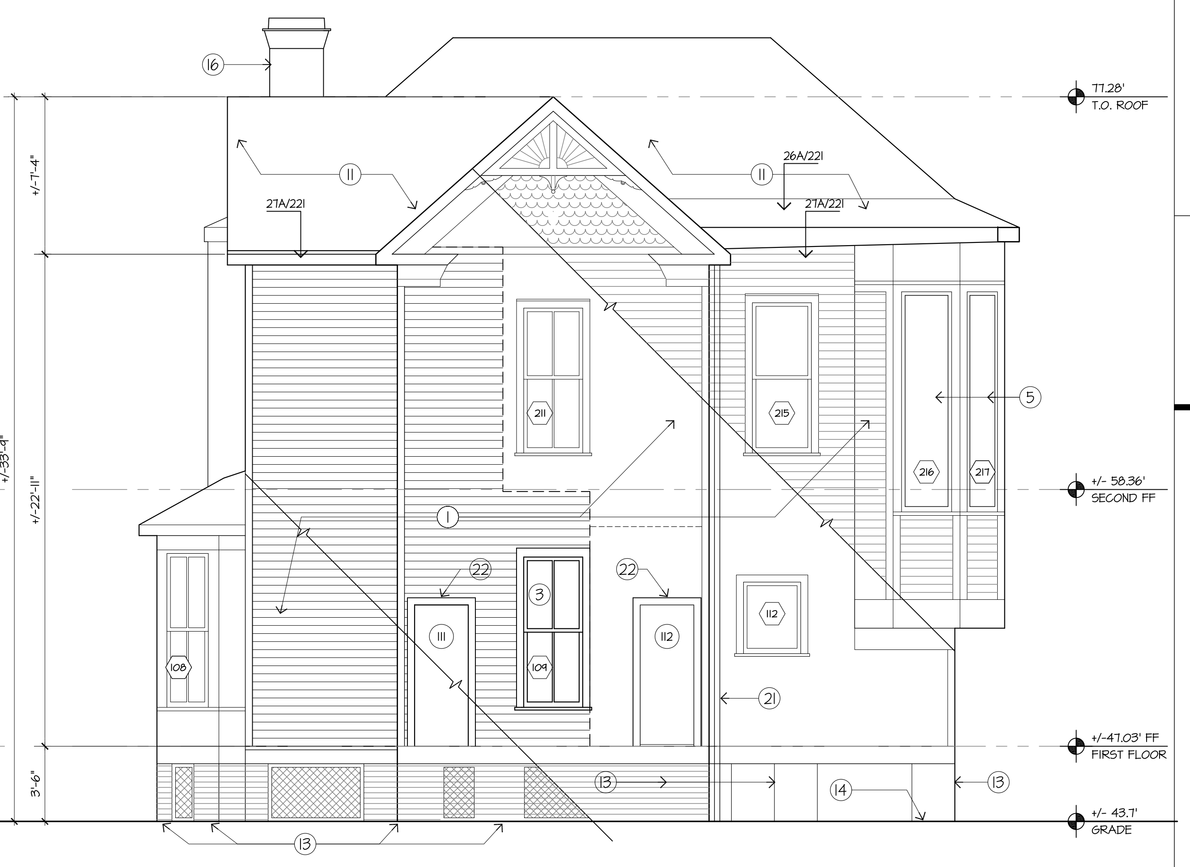

8 NORTH ELEVATION
1/4"=1'-0"
RE: .

20 EAST ELEVATION
1/4"=1'-0"
RE: .

6 SOUTH ELEVATION
1/4"=1'-0"
RE: .

BAILEY ARCHITECTS
12 BLOOM DR., SUITE 420
PH:713.524.2150
HOUSTON, TX 77005
FAX:713.524.3947
www.baileyarchitects.com

Consultants:

Walter P. Moore & Associates, Inc.
Civil Engineers
Cardno Haynes Whaley Assoc, Inc.
Structural Engineers
E&C Engineers & Consultants, Inc.
MEP Engineers
DataCom Design Group
Audio Visual Consultant
Bos Lighting Design
Lighting Consultant
SLR International Corporation
Acoustics Consultant
The Office of James Burnett
Landscape Architects

REGISTERED ARCHITECT JAMES D. LEIFESTE 11526 STATE OF TEXAS
1/26/15

NAU CENTER FOR TEXAS CULTURAL HERITAGE
COHN HOUSE REHABILITATION
PACKAGE 2

1801 Capitol St.
Houston, Texas

Issue	Date	Description
	1/26/15	PERMIT & PRICING

PROJECT NO.: 13022
FILE: PATH
DRAWN BY: Author
CHECKED BY: Checker

COPYRIGHT: © Bailey Architects 2015

Sheet Title:

ELEVATIONS

Sheet No:

A.c-301

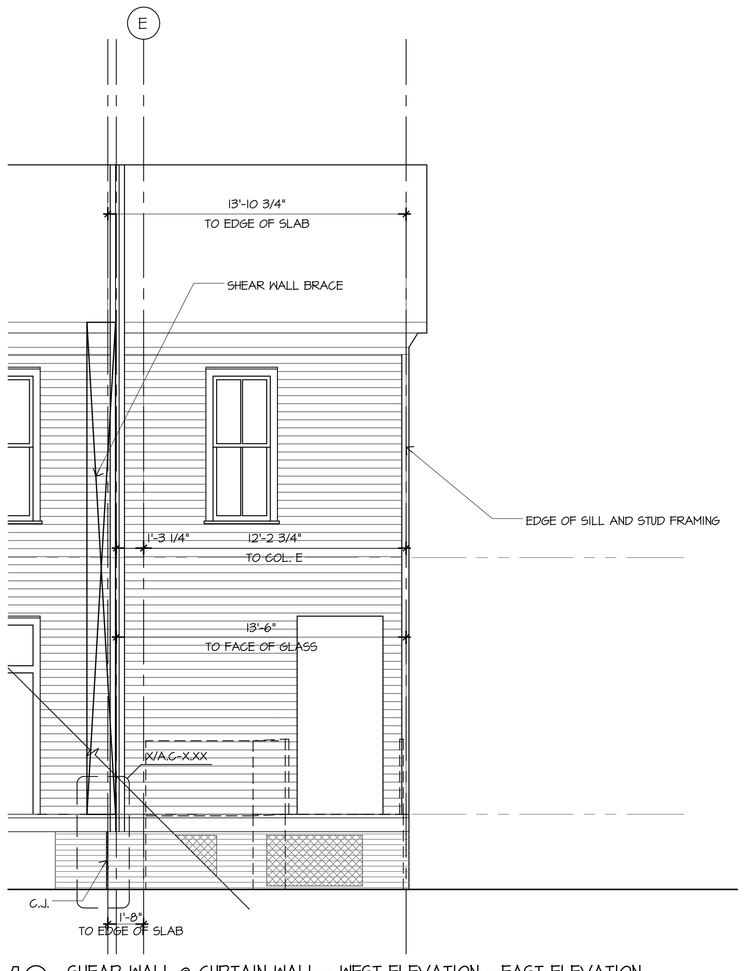

16 SHEAR WALL @ CURTAIN WALL - WEST ELEVATION - EAST ELEVATION
1/4"=1'-0'
RE: .

6 STRUCTURAL @ INTERSECTION W/ GLASS - NORTH ELEVATION
1/4"=1'-0'
RE: .

BAILEY ARCHITECTS
112 WILSON DR., SUITE 420
PH:713.524.2100
Houston, TX 77005
FAX:713.524.3947
www.baileyarchitects.com

Consultants:

Walter P. Moore & Associates, Inc.
Civil Engineers
Cardno Haynes Whaley Assoc, Inc.
Structural Engineers
E&C Engineers & Consultants, Inc.
MEP Engineers
DataCom Design Group
Audio / Visual Consultant
Bos Lighting Design
Lighting Consultant
SLR International Corporation
Acoustics Consultant
The Office of James Burnett
Landscape Architects

REGISTERED ARCHITECT
JOHN D. LEINGANG
6591
STATE OF TEXAS
1/26/15

NAU CENTER FOR TEXAS CULTURAL HERITAGE
COHN HOUSE REHABILITATION
PACKAGE 2

1801 Capitol St.
Houston, Texas

Issue	Date	Description
	1/26/15	PERMIT & PRICING

PROJECT NO.: 13022
FILE: PATH
DRAWN BY: Author
CHECKED BY: Checker
COPYRIGHT: © Bailey Architects 2015

Sheet Title:
ELEVATIONS AND SECTION @ CURTAIN WALL

Sheet No:
A.c-302

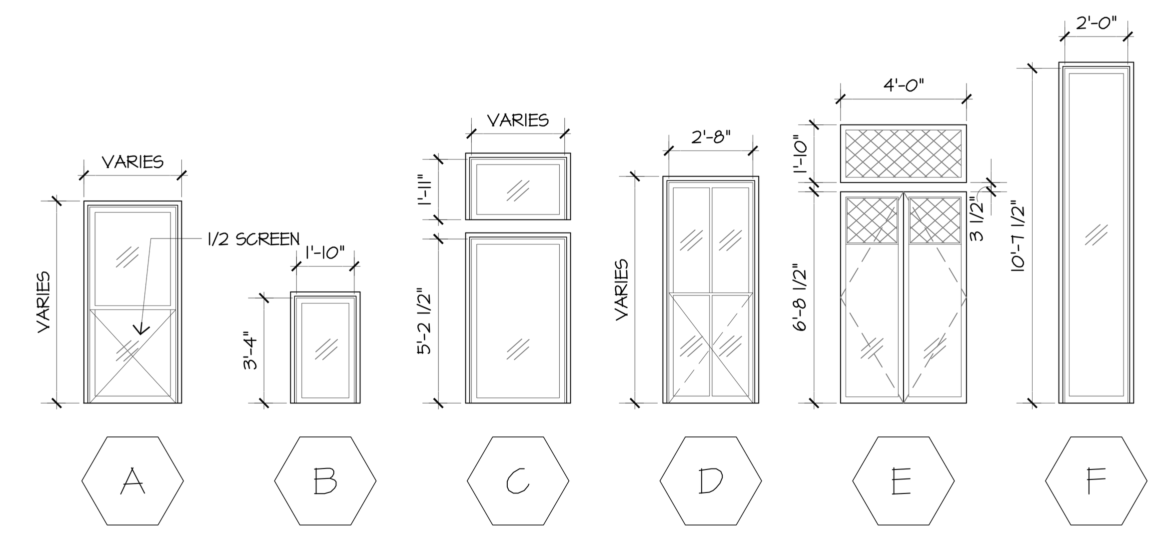

25 WINDOW TYPES
1/4"=1'-0'
RE: .

GLASS TYPES NOTES:

GLASS TYPE G-1: SINGLE PANE HISTORIC "WAVY" GLASS; EXISTING GLAZING TO REMAIN, REPLACE MISSING/BROKEN GLAZING TO MATCH EXISTING; REPLACE GLAZING PUTTY

GLASS TYPE G-2, HEAT-TREATED LAMINATED-GLASS UNITS:
1. KIND LT, CONSISTING OF TWO LITES OF FULLY TEMPERED FLOAT GLASS
2. OUTER LITE: CLASS I CLEAR FLOAT GLASS
   A. KIND FT (FULLY TEMPERED)
   B. THICKNESS: 3.0 MM
3. INNER LITE: CLASS I (CLEAR) FLOAT GLASS
   A. KIND FT (FULLY TEMPERED)
   B. THICKNESS: 3.0 MM
4. PLASTIC INTERLAYER:
   A. THICKNESS: 0.060 INCH (1.52 MM), BUT NOT LESS THAN THAT REQUIRED TO COMPLY AS A TYPE II SAFETY GLASS MATERIAL
   B. INTERLAYER COLOR: CLEAR
   C. VISIBLE LIGHT TRANSMITTANCE OF INTERLAYER: MIN. 95%

GLASS TYPE G-3: EXISTING LEADED GLASS
GLASS TYPE G-4: TEMPERED CLEAR BEVELED GLASS
1. THICKNESS: ¼"
2. LOCATION: FRONT ENTRANCE DOORS

WINDOW SCHEDULE - FIRST FLOOR

WINDOW NUMBER	WINDOW TYPE	DETAILS A-541 HEAD	JAMB	SILL	HARD-WARE	FRAME MATERIAL	INTERIOR OPENING V.I.F. REF: DETAILS WIDTH	HEIGHT	UPPER INTERIOR OPENING TYPE C ONLY WIDTH	HEIGHT	SCREEN	GLAZING
101	C	17-A541	16-A541	12-A541	H-1	WD	4'-0"	5'-1 1/2"	4'-0"	1'-11"	Y	G-1
102	C	17-A541	16-A541	12-A541	H-1	WD	1'-10"	5'-1 1/2"	1'-10"	1'-11"	Y	G-1
103	C	17-A541	16-A541	12-A541	H-1	WD	2'-11"	5'-1 1/2"	2'-11"	1'-11"	Y	G-1
104	C	17-A541	16-A541	12-A541	H-1	WD	1'-9"	5'-1 1/2"	1'-9"	1'-11"	Y	G-1
105	A	28-A541	27-A541	26-A541	H-2	WD	2'-11"	7'-0"			Y	G-1
106	D	11-A541	7-A541	6-A541	H-2	WD	2'-8"	7'-0"			Y	G-1
107	D	11-A541	7-A541	6-A541	H-2	WD	2'-8"	7'-0"			Y	G-1
108	D	11-A541	7-A541	6-A541	H-2	WD	2'-8"	7'-0"			Y	G-1
109	D	11-A541	7-A541	6-A541	H-2	WD	2'-10"	7'-0"			Y	G-1
110	D	11-A541	7-A541	6-A541	H-2	WD	2'-8 1/4	7'-0"			Y	G-1
111	D	11-A541	7-A541	6-A541	H-2	WD	2'-8 1/2"	7'-0"			Y	G-1
112	B	23-A541	22-A541	21-A541	-	WD	1'-10"	3'-4"				G-1
113	B	23-A541	22-A541	21-A541	-	WD	1'-10"	3'-4"				G-2
114	A	28-A541	27-A541	26-A541	H-2	WD	2'-11 1/2"	6'-0"			Y	G-1
115	A	28-A541	27-A541	26-A541	H-2	WD	2'-11 1/2"	7'-4"			Y	G-1
151	D	11-A541	7-A541	6-A541	H-2	WD	2'-8 1/4	7'-0"			Y	G-1

WINDOW NUMBER	FRAME: HEAD	LEFT	RIGHT	SILL	LEFT MOLD	RIGHT MOLD	TOP MOLD	TOP SASH: GLASS	TOP RAIL	LEFT STYLE	RIGHT STYLE	BOTTOM RAIL	MULLION	HARDWARE	WEATHER STRIP	BOTTOM SASH: GLASS	TOP RAIL	LEFT STYLE	RIGHT STYLE	BOTTOM RAIL	MULLION	HARDWARE	WEATHER STRIP	INTERIOR TRIM: HEAD	LEFT JAMB	RIGHT JAMB	SILL	APRON	PULLEY	ACTION
101													X	X	X					1										
102													X	X	X			1												2
103													X	X	X				1											
104													X	X	X															
105																		3	3			1								
106												1								1							1			REPLACE SCREEN
107									3			1								1		1					1			REPLACE SCREEN
108									1			1										1								REPLACE SCREEN
109																														5
110												1								1										
111																				1										6
112																														NOT OBSERVABLE
113																														
114																														
115																				1		1								KEEP SASH PULL
151																														10

WINDOW SCHEDULE - SECOND FLOOR

WINDOW NUMBER	WINDOW TYPE	DETAILS HEAD	JAMB	SILL	HARD-WARE	FRAME MATERIAL	MASONRY OPENING V.I.F. WIDTH	HEIGHT	TRANSOM HEIGHT	GLAZING
201	A	28-A541	27-A541	26-A541	H-2	WD	2'-9 1/4"	7'-0"	-	G-1
202	A	28-A541	27-A541	26-A541	H-2	WD	2'-9"	8'-9 1/4"	-	G-1
203	A	28-A541	27-A541	26-A541	H-2	WD	2'-11 1/4"	7'-1/2"	-	G-1
204	E	2-A541	1-A541	1-A542	H-3	WD	8'-0"	6'-8 1/2"	1'-10 1/2"	G-1
205	A	28-A541	27-A541	26-A541	H-2	WD	1'-9 1/4"	7'-1/2"	-	G-1
206	A	28-A541	27-A541	26-A541	H-2	WD	2'-9 1/4"	7'-1/2"	-	G-1
207	A	28-A541	27-A541	26-A541	H-2	WD	1'-9 1/4"	7'-1/2"	-	G-1
208	A	28-A541	27-A541	26-A541	H-2	WD	2-9"	7'-1"	-	G-1
209	A	28-A541	27-A541	26-A541	H-2	WD	1-11"	4'-1"	-	G-1
210	A	28-A541	27-A541	26-A541	H-2	WD	2-9"	6'-5"	-	G-1
211	D	11-A541	7-A541	6-A541	H-2	WD	2-8"	6'-9"	-	G-1
212	D	11-A541	7-A541	6-A541	H-2	WD	2-8"	6'-9"	-	G-1
213	D	11-A541	7-A541	6-A541	H-2	WD	2-8"	6'-9"	-	G-1
214	D	11-A541	7-A541	6-A541	H-2	WD	2-8"	6'-9"	-	G-1
215	A	28-A541	27-A541	26-A541	H-2	WD	2'-9 1/4"	7'-0 1/2"	G-1	G-1
216	F	16-A542	16-A542	16-A542	-	WD	2'-0 1/4"	10'-7 1/2"	G-1	G-1
217	F	16-A542	16-A542	16-A542	-	WD	2'-0 1/4"	10'-7 1/2"	G-1	G-1
218	F	16-A542	16-A542	16-A542	-	WD	2'-0 1/4"	10'-7 1/2"	G-1	G-1
219	A	28-A541	27-A541	26-A541	H-2	WD	1'-11 1/2"	7'-0"	G-1	G-1
220	A	28-A541	27-A541	26-A541	H-2	WD	2'-9 1/4"	7'-1/2"	-	G-1
221	A	28-A541	27-A541	26-A541	H-2	WD	2'-9 1/4"	7'-1/2"	-	G-1
251	D	11-A541	7-A541	6-A541	H-2	WD	2-8"	6'-9"	-	G-1
252	D	11-A541	7-A541	6-A541	H-2	WD	2-8"	6'-9"	-	G-1

WINDOW NUMBER	FRAME: HEAD	LEFT	RIGHT	SILL	LEFT MOLD	RIGHT MOLD	TOP MOLD	TOP SASH: GLASS	TOP RAIL	LEFT STYLE	RIGHT STYLE	BOTTOM RAIL	MULLION	HARDWARE	WEATHER STRIP	BOTTOM SASH: GLASS	TOP RAIL	LEFT STYLE	RIGHT STYLE	BOTTOM RAIL	MULLION	HARDWARE	WEATHER STRIP	INTERIOR TRIM: HEAD	LEFT JAMB	RIGHT JAMB	SILL	APRON	PULLEY	ACTION
201								1																						
202																						10								11 -LOWER SASH
203								1																						
204														1		1						1								12 13 SCREEN?
205				1																							1			
206				1																							1			
207				1																							1			
208									1							1														
209																														
210																														11 -UPPER SASH
211																														11 -UPPER SASH
212								1																						
213																														
214																														
215													1			1														7
216									1	1	1	1												1						8 9 EXISTING STAINED GLASS
217								1	1	1	1	1																		8 11
218									1	1	1	1																		8 9 EXISTING STAINED GLASS
219		1	1										1																	7
220		1	1																											
221		1	1																											
251																														10
252																														10

WINDOW SCHEDULE - ATTIC

WINDOW NUMBER	WINDOW TYPE	DETAILS HEAD	JAMB	SILL	HARD-WARE	FRAME MATERIAL	MASONRY OPENING V.I.F. WIDTH	HEIGHT	TRANSOM HEIGHT	GLAZING
301	A	28-A541	27-A541	26-A541	-	WD			-	G-1
302	A	28-A541	27-A541	26-A541	-	WD			-	G-1
303	A	28-A541	27-A541	26-A541	-	WD			-	G-1
304	E	2-A541	1-A541	1-A542	-	WD			-	G-1
305	A	28-A541	27-A541	26-A541	-	WD			-	G-1

WINDOW NUMBER	FRAME: HEAD	LEFT	RIGHT	SILL	LEFT MOLD	RIGHT MOLD	TOP MOLD	TOP SASH: GLASS	TOP RAIL	LEFT STYLE	RIGHT STYLE	BOTTOM RAIL	MULLION	HARDWARE	WEATHER STRIP	BOTTOM SASH: GLASS	TOP RAIL	LEFT STYLE	RIGHT STYLE	BOTTOM RAIL	MULLION	HARDWARE	WEATHER STRIP	INTERIOR TRIM: HEAD	LEFT JAMB	RIGHT JAMB	SILL	APRON	PULLEY	ACTION
301																														
302																														
303																														
304																														
305																														

GENERAL NOTES:

1. ALL WINDOWS ARE EXISTING TO REMAIN U.N.O.
2. CONTRACTOR TO FIELD VERIFY ALL DIMENSIONS.
3. ALL LOWER WINDOW SASHES TO BE MADE OPERABLE. SCREW WOOD STOP TO FIX UPPER SASH IN PLACE. RE: WINDOW DETAILS.
4. WOOD VENETIAN BLINDS TO BE INSTALLED AT ALL WINDOW LOCATIONS U.N.O.
5. REFER TO WINDOW ACTIONS FOR SPECIFIC SCOPE OF WORK AT EACH WINDOW.
6. ALL EXTERIOR REPLACEMENT GLASS TO BE GLASS TYPE G-1.

KEY NOTES:

(1) REPLACE
(2) REPLACE SASH PULL TO MATCH EXISTING.
(3) GLUE CORNER
(4) REMOVE NON-ORIGINAL HARDWARE
(5) REPLACE WINDOW SASHES, FRAME, & EXTERIOR TRIM. INTERIOR TRIM EXISTS.
(6) REMOVE NAILS IN LOWER SASH TO RESTORE OPERABILITY. FILL HOLES.
(7) REMOVE BRACKETS FROM INTERIOR TRIM
(8) REPLACE EXTERIOR SILL
(9) RESTORE EXIST LEADED STAINED GLASS WINDOW IN NEW WOOD SASH.
(10) NEW WINDOW OPENING, WINDOW UNIT, TRIM, ETC.
(11) LEADED STAINED GLASS WINDOW TO MATCH WINDOWS 216, 218 IN WOOD SASH TO FIT EXISTING SILL, JAMB, HEAD. COORDINATE DESIGN W/ ARCHITECT.

ACTIONS:

1. INCLUDE THE FOLLOWING GENERAL REPAIRS ON ALL WINDOWS:
   - REMOVE ALL WINDOW COVERINGS & BRACKETS
   - REMOVE LOOSE PAINT FROM ALL SURFACES TO A SOUND SURFACE (INCLUDING GLASS). DO NOT DAMAGE WOOD, PROFILES OR SURFACES.
   - REPLACE ALL SEVERELY DETERIORATED, UNSOUND PIECES. PROFILES TO MATCH EXISTING WINDOW LOCATION.
   - GLUE ALL JOINTS.
   - PRIME ALL SURFACES, CONCEALED AND EXPOSED.
   - PAINT: 2 COATS ON ALL SURFACES.
   - REGLAZE ALL BROKEN GLAZING UNO.
   - REPLACE ALL SASH CORDS (EXCEPT MTL CORDS) AND RE-CONNECT ALL LOWER SASH WEIGHTS. UNUSED WEIGHTS TO REMAIN IN POCKET. INSTALL WEIGHT IN POCKETS FROM WHICH THEY WERE REMOVED.
   - UPPER SASH TO REMAIN FIXED. INSTALL NEW SASH BLOCK PTD. LOWER SASH TO REMAIN OPERABLE.
   - REPLACE ALL DAMAGED HARDWARE & LOCKS TO MATCH EXISTING TYPE. DO NOT PAINT HARDWARE.
   - INSTALL NEW COPPER WEATHERSTRIPPING.

NOTE:
CONTRACTOR TO FIELD VERIFY ALL DIMENSIONS AND CONDITIONS PRIOR TO COMMENCEMENT OF WORK. NOTIFY ARCHITECT IMMEDIATELY OF DEVIATIONS TO SCOPE OF WORK.

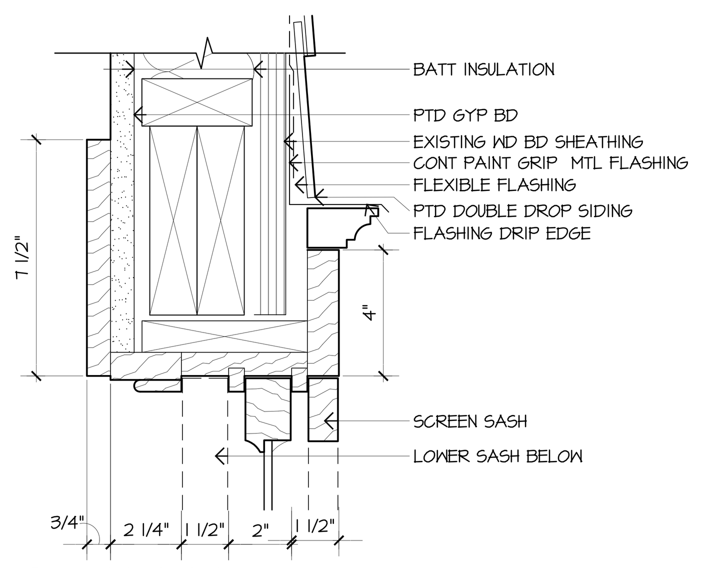

28 TYPE A HEAD
3"=1'-0'
RE: .

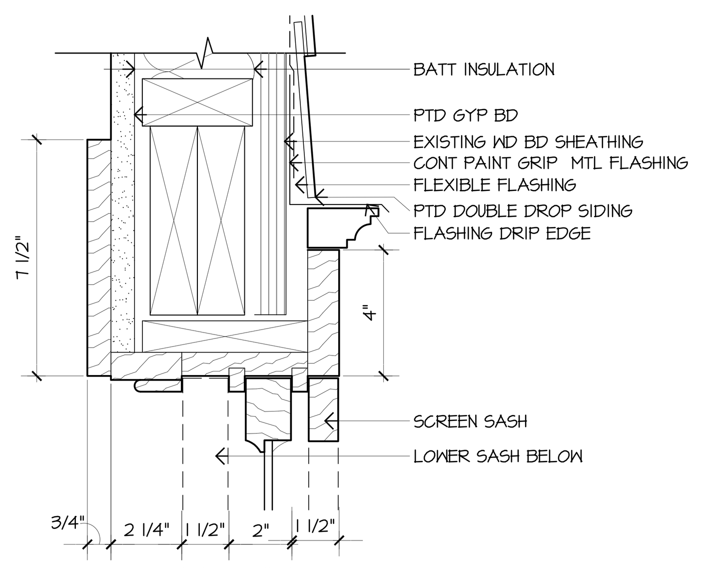

23 TYPE B HEAD
3"=1'-0'
RE: .

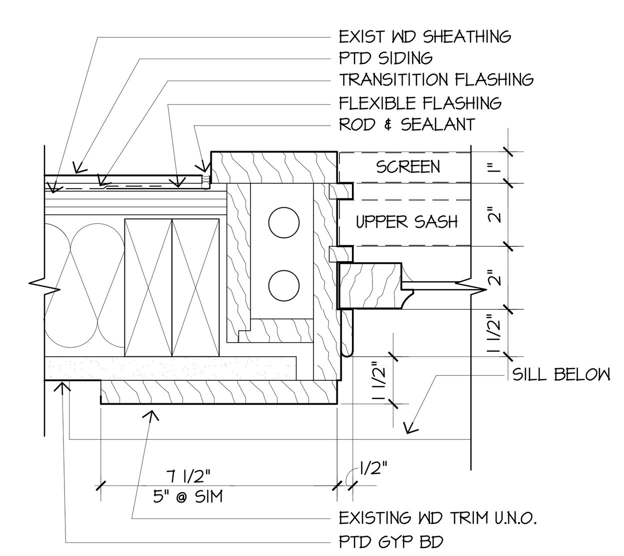

27 TYPE A JAMB
3"=1'-0'
RE: .

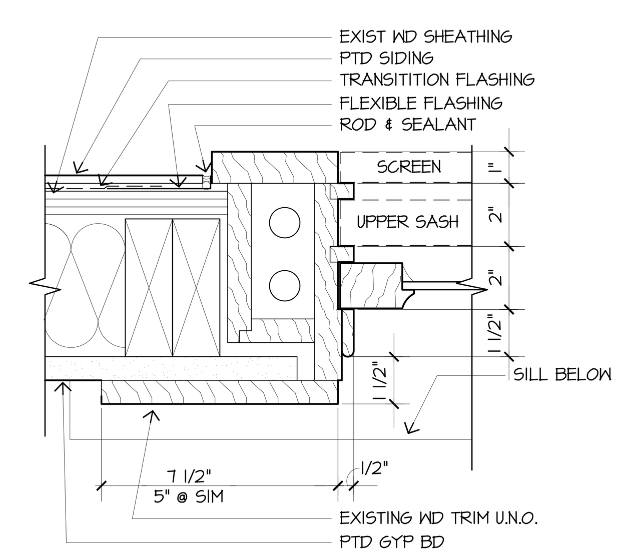

22 TYPE B JAMB
3"=1'-0'
RE: .

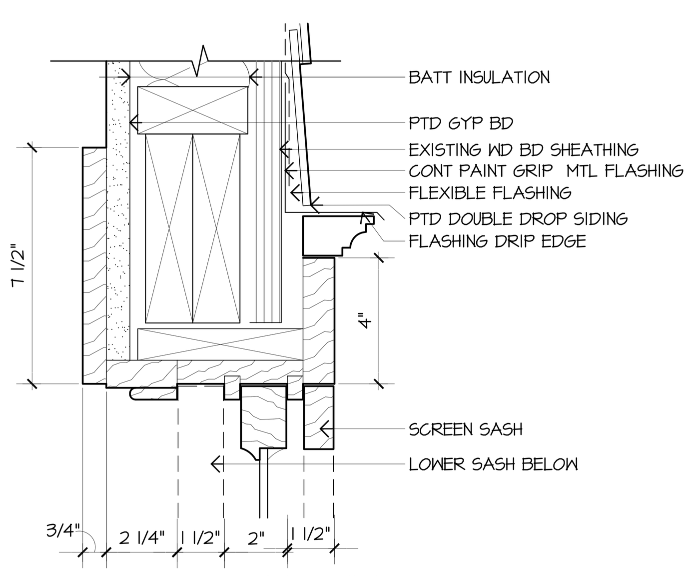

17 TYPE C HEAD
3"=1'-0'
RE: .

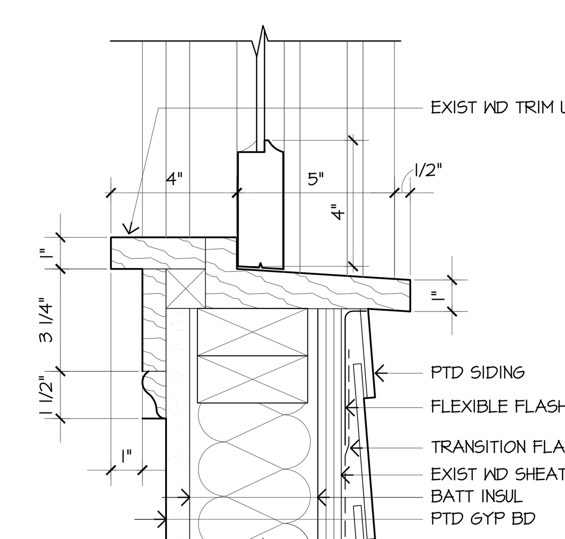

12 TYPE C SILL
3"=1'-0'
RE: .

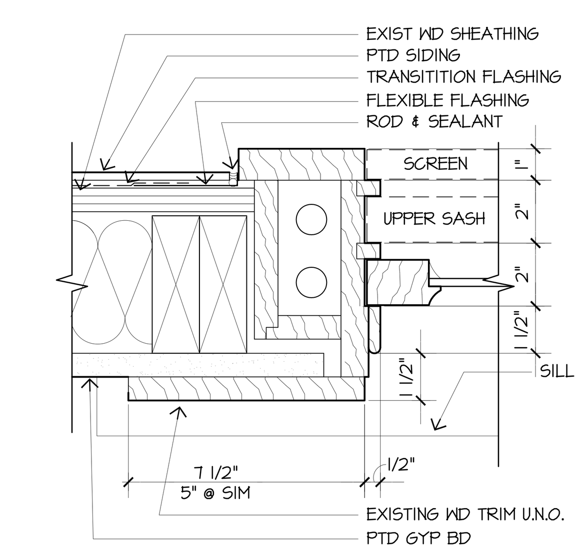

7 TYPE D JAMB
3"=1'-0'
RE: .

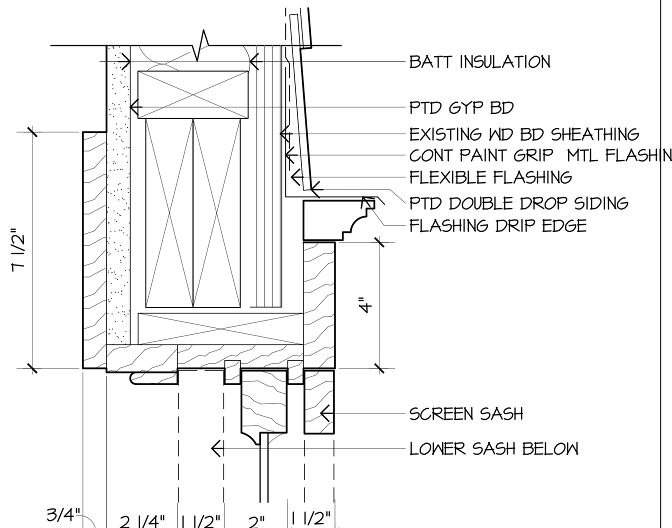

2 TYPE E HEAD
3"=1'-0'
RE: .

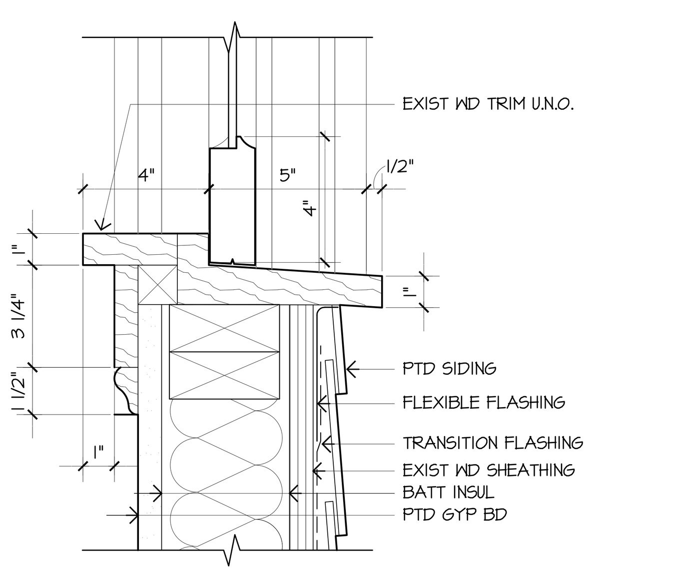

26 TYPE A SILL
3"=1'-0'
RE: .

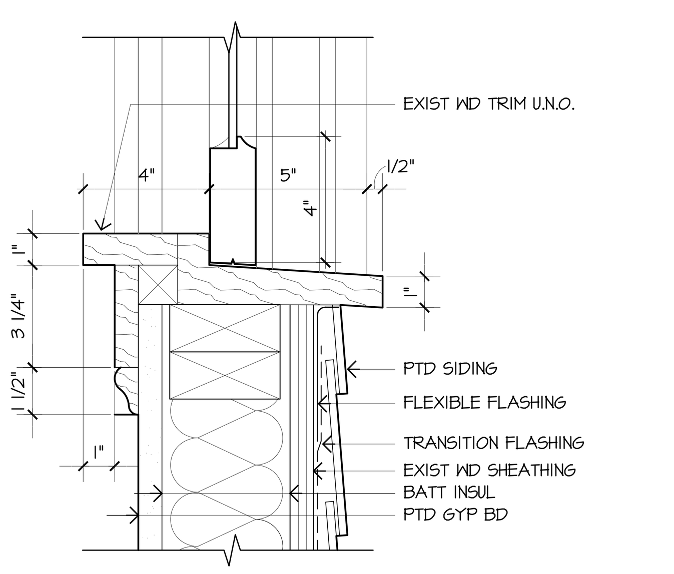

21 TYPE B SILL
3"=1'-0'
RE: .

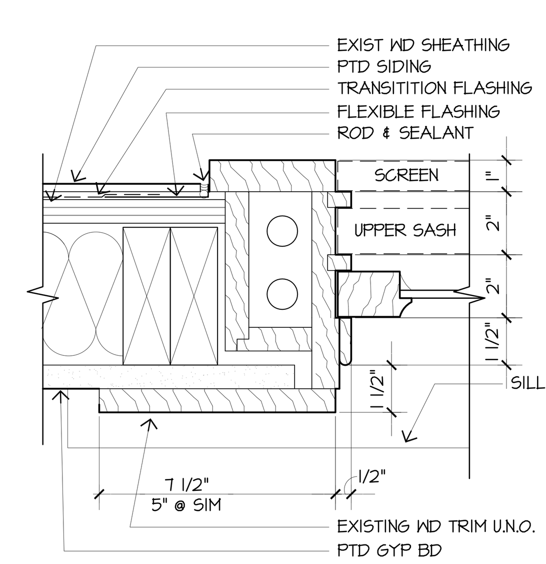

16 TYPE C JAMB
3"=1'-0'
RE: .

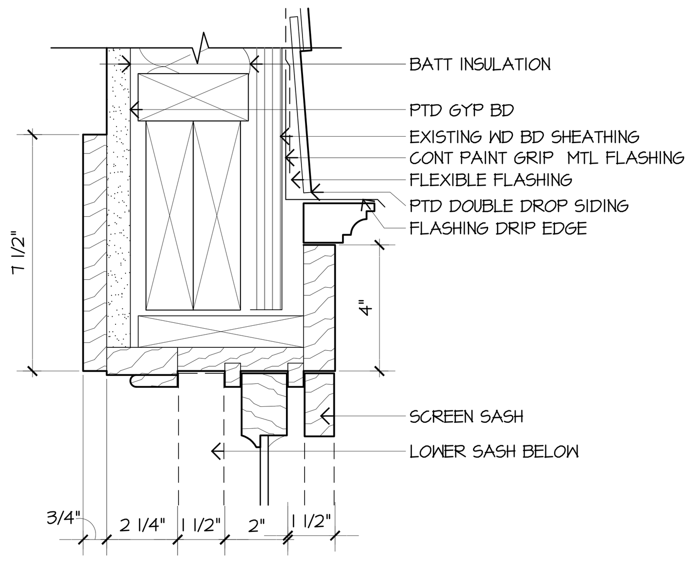

11 TYPE D HEAD
3"=1'-0'
RE: .

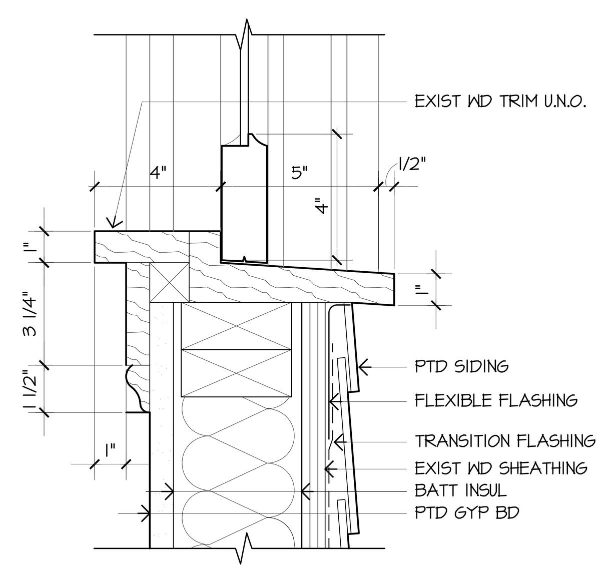

6 TYPE D SILL
3"=1'-0'
RE: .

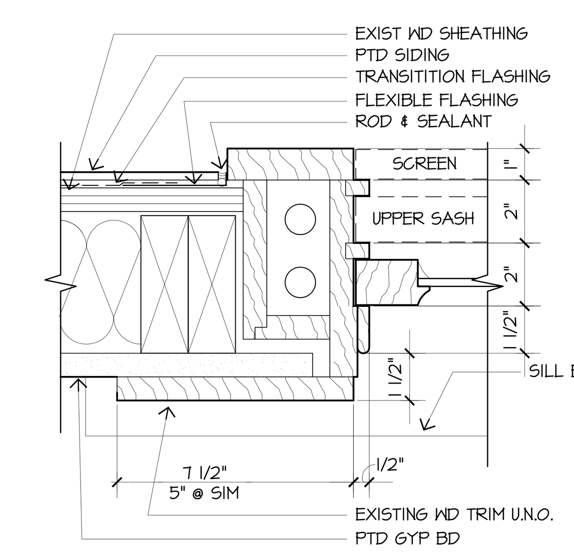

1 TYPE E JAMB
3"=1'-0'
RE: .

BAILEY ARCHITECTS
55 WAUGH DR. SUITE 450 Houston, TX 77007
PH:713.524.2155 FAX:713.524.3947
www.baileyarchitects.com

Consultants:
Walter P. Moore & Associates, Inc.
Civil Engineers
Cardno Haynes Whaley Assoc, Inc.
Structural Engineers
E&C Engineers & Consultants, Inc.
MEP Engineers
DataCom Design Group
Audio / Visual Consultant
Bos Lighting Design
Lighting Consultant
SLR International Corporation
Acoustics Consultant
The Office of James Burnett
Landscape Architects

REGISTERED ARCHITECT
STATE OF TEXAS
1/26/15

NAU CENTER FOR TEXAS CULTURAL HERITAGE
COHN HOUSE REHABILITATION
PACKAGE 2
1801 Capitol St. Houston, Texas

Issue	Date	Description
	1/26/15	PERMIT & PRICING

PROJECT NO.: 13022
FILE: PATH
DRAWN BY: Author
CHECKED BY: Checker
COPYRIGHT: © Bailey Architects 2015

Sheet Title:
WINDOW SCHEDULES
WINDOW TYPES

Sheet No:
A.c-541

C:\Users\claudiap\Documents\13022_Texas_Cultural_Heritage_Facility_ClaudiaP.rvt

25 SECTION
1/4"=1'-0"
RE: A-201

21 SECTION
1/4"=1'-0"
RE: A-201

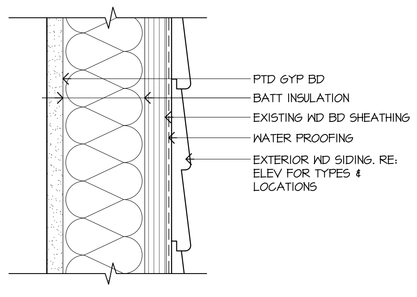

1 TYP EXTERIOR WALL
3"=1'-0"
RE: .

GENERAL NOTES:

1. ELEVATION NAMES ARE BASED ON THE THEIR PLACEMENT PRIOR TO THE START OF CONSTRUCTION.
2. PROVIDE CMU PIERS, BRICK VENEER, GRADE BEAMS AND MUD SLAB FOUNDATION. REFER TO SIMILAR FOUNDATION IN PREVIOUS HOUSE MOVING CONSTRUCTION DRAWINGS AVAILABLE FROM BAILEY ARCHITECTS.

NOTE:
DIMENSIONS ARE APPROXIMATE CONTRACTOR TO CONFIRM IN FIELD AFTER PLACEMENT OF THE HOUSE ON THE NEW SLAB.

KEY NOTES:

1. NAU CENTER BEYOND. REFER TO NAU CENTER PACKAGE FOR CURTAIN WALL DETAILS AT CONNECTION TO COHN HOUSE.

BAILEY ARCHITECTS
12 BLUCK DR., SUITE 420 HOUSTON, TX 77090
PH:713.524.2150 FAX:713.524.3947
www.baileyarchitects.com

Consultants:

Walter P. Moore & Associates, Inc.
Civil Engineers
Cardno Haynes Whaley Assoc, Inc.
Structural Engineers
E&C Engineers & Consultants, Inc.
MEP Engineers
DataCom Design Group
Audio / Visual Consultant
Bos Lighting Design
Lighting Consultant
SLR International Corporation
Acoustics Consultant
The Office of James Burnett
Landscape Architects

REGISTERED ARCHITECT JOHN D. LEITNER 6591 STATE OF TEXAS
1/26/15

NAU CENTER FOR TEXAS CULTURAL HERITAGE
COHN HOUSE REHABILITATION
PACKAGE 2

1801 Capitol St.
Houston, Texas

Issue	Date	Description
	1/26/15	PERMIT & PRICING

PROJECT NO.: 13022
FILE: PATH
DRAWN BY: Author
CHECKED BY: Checker
COPYRIGHT: © Bailey Architects 2015

Sheet Title:
BUILDING SECTION

Sheet No:
A.c-601

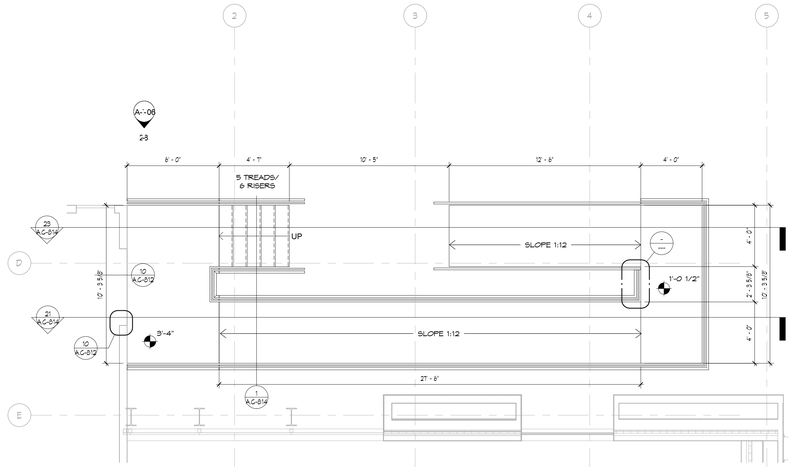

2 PLAN OF RAMP TO COHN HOUSE
1/4" = 1'-0"
RE: 1 A-201A

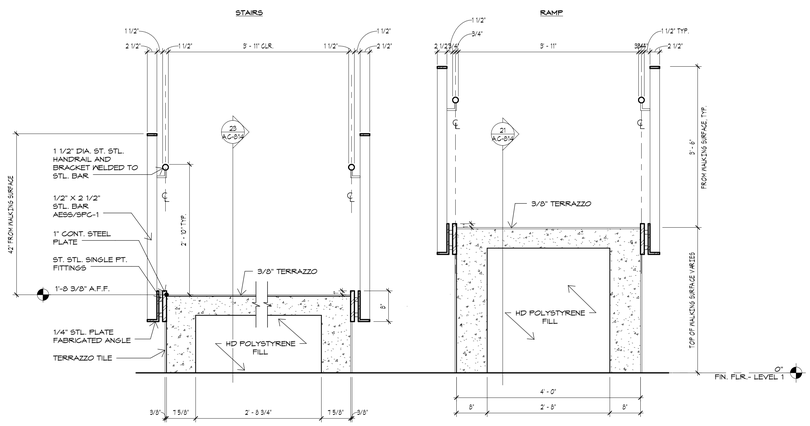

1 RAMP @ COHN HOUSE - EAST
3/4" = 1'-0"
RE: 2 A.C-814

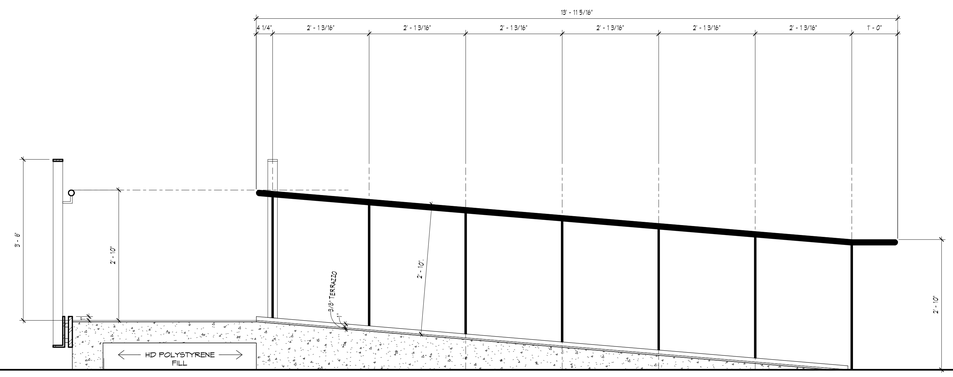

23 RAMP & STAIR @ COHN HOUSE - SOUTH
3/4" = 1'-0"
RE: 1 A.C-814

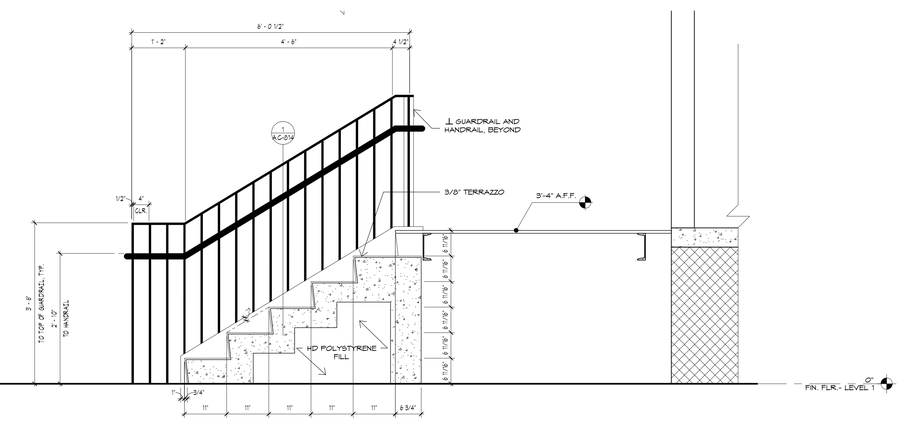

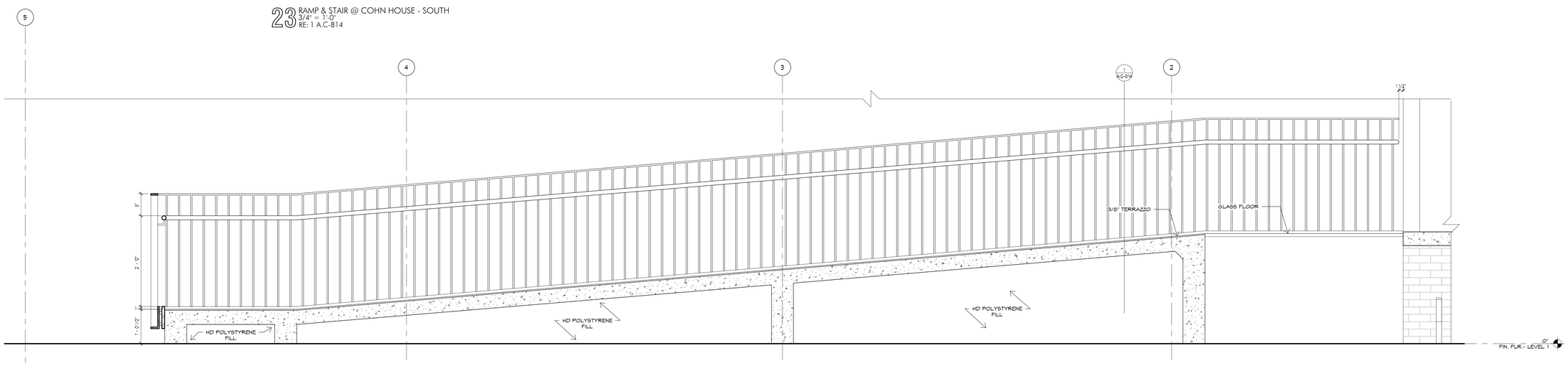

21 RAMP @ COHN HOUSE - SOUTH
3/4" = 1'-0"
RE: 1 A.C-814

BAILEY ARCHITECTS
55 WAUGH DR. SUITE 450
Houston, TX 77007
PH:713.524.2555
FAX:713.524.3947
www.baileyarchitects.com

Consultants:

Walter P. Moore & Associates, Inc.
Civil Engineers
Cardno Haynes Whaley Assoc, Inc.
Structural Engineers
E&C Engineers & Consultants, Inc.
MEP Engineers
DataCom Design Group
Audio / Visual Consultant
Bos Lighting Design
Lighting Consultant
SLR International Corporation
Acoustics Consultant
The Office of James Burnett
Landscape Architects

REGISTERED ARCHITECT
JAMES D. LEIMER
25591
STATE OF TEXAS
1/26/15

NAU CENTER FOR TEXAS CULTURAL HERITAGE

PACKAGE 1

1801 Capitol St.
Houston, Texas

Issue	Date	Description
	1/26/15	Permit and Pricing

PROJECT NO.: 13022
FILE:
DRAWN BY: Author
CHECKED BY: Checker
COPYRIGHT: © Bailey Architects 2015

Sheet Title:

COHN HOUSE DETAILS

Sheet No:

A.C-814