CERTIFICATE OF APPROPRIATENESS
APPLICATION FORM

PLANNING & DEVELOPMENT DEPARTMENT

PROPERTY

Address 1919 HOUSTON AVE, HOUSTON, TX 77007

Historic District / Landmark CURRENT CITY LANDMARK HCAD # 005-108-000-0013

Subdivision W.R. BAKER ADDITION, JOHN AUSTIN TWO LEAGUE GRANT, N. SIDE BUFFALO BAYOU Lot 7+8 Block 284

DESIGNATION TYPE

- [x] Landmark "CURRENTLY"
- [ ] Protected Landmark
- [ ] Archaeological Site
- [ ] Contributing
- [ ] Noncontributing
- [ ] Vacant

PROPOSED ACTION "ALREADY ~~IN~~ BUILT"

- [x] Alteration or Addition
- [ ] Restoration
- [ ] New Construction
- [ ] Relocation
- [ ] Demolition
- [ ] Excavation

DOCUMENTS

- [x] Application checklist for each proposed action and all applicable documentation listed within are attached

OWNER

Name DAVID DENENBURG

Company STATION 3, LLC

Mailing Address 3262 WESTHEIMER RD STE. 504, HOUSTON, TX 77098

Phone (713) 922-7099

Email [redacted]

Signature

Date 8/3/15

APPLICANT (if other than owner)

Name

Company

Mailing Address

Phone

Email

Signature

Date

ACKNOWLEDGEMENT OF RESPONSIBILITY

Requirements: A complete application includes all applicable information requested on checklists to provide a complete and accurate description of existing and proposed conditions. Preliminary review meeting or site visit with staff may be necessary to process the application. Owner contact information and signature is required. Late or incomplete applications will not be considered.

Deed Restrictions: You have verified that the work does not violate applicable deed restrictions.

Public Records: If attached materials are protected by copyright law, you grant the City of Houston, its officers, agencies, departments, and employees, non-exclusive rights to reproduce, distribute and publish copyrighted materials before the Houston Archaeological and Historical Commission, the Planning Commission, City Council, and other City of Houston commissions, agencies, and departments, on a City of Houston website, or other public forum for the purposes of application for a Certificate of Appropriateness or building permit, and other educational and not for profit purposes. You hereby represent that you possess the requisite permission or rights being conveyed here to the City.

Compliance: If granted, you agree to comply with all conditions of the COA. Revisions to approved work require staff review and may require a new application and HAHC approval. Failure to comply with the COA may result in project delays, fines or other penalties.

Planner: _____ *Application received:* ___/___/___ *Application complete:* ___/___/___

CERTIFICATE OF APPROPRIATENESS
APPLICATION INSTRUCTIONS

PLANNING & DEVELOPMENT DEPARTMENT

Well in advance of the COA application deadline contact staff to discuss your project, application requirements, and, if necessary, to make an appointment to meet with staff for a project consultation. Visit the Historic Preservation Web Manual for historic district profiles, project guidance and forms. www.houstontx.gov/HistoricPreservationManual

Historic Preservation Office	**832.393.6556**	**historicpreservation@houstontx.gov**

SUBMISSION INSTRUCTIONS

To submit application to Planning Department:

- email documents to historicpreservation@houstontx.gov (attachments must be less than 10MB)
- send a Dropbox shared folder invitation to historicpreservation@houstontx.gov, or
- contact staff to set up an appointment to drop off a disc or flash drive.

MEETING SCHEDULE

- Applications are due **22 calendar days** in advance of the HAHC meeting by **12 PM (noon)** on the deadline date. Exception: revisions to items deferred or denied at the previous HAHC meeting are due 15 days in advance of the scheduled meeting.
- Application deadlines are firm. All materials must be submitted by the deadline to be considered at the following HAHC meeting. Designs must be final at time of application; revisions will not be accepted after the deadline.
- HAHC will not accept new material or redesigns presented at the HAHC meeting. Deferral until the following month's meeting may be necessary in such cases to allow for adequate review by staff and commissioners.
- HAHC monthly meetings are held at 3:00 PM at City Hall Annex, 900 Bagby Street, City Council Chambers, Public Level.

2015 Meeting Dates (Thursdays unless noted otherwise)	**COA Application Deadlines**	**Demolition / Relocation Posted Sign Deadlines**
January 29	January 7	January 19
February 26	February 4	February 16
March 26	March 4	March 16
April 23	April 1	April 13
May 21	April 29	May 11
June 18	May 27	June 8
July 22 (Wednesday)	June 30	July 12
August 27	August 5	August 17
September 24	September 2	September 14
October 22	September 30	October 12
November 19	October 28	November 9
December 16 (Wednesday)	November 24	December 6

CERTIFICATE OF APPROPRIATENESS APPLICATION
PART I – GENERAL FORM

PLANNING & DEVELOPMENT DEPARTMENT

DEFINITIONS

Addition: any expansion to an existing building, structure or object.

Alteration: any change to the exterior of a building or structure, including adding, moving, removing or replacing an exterior feature.

Demolition: an act or process that destroys in whole, or a majority of, any building, structure, object or site.

Excavation: to expose, uncover, or remove by digging, cutting or hollowing out.

Exterior Feature: an element of the architectural character and the general arrangement of the external portion of a building, structure or object, including building materials.

Mandatory Repair: a repair of a building or structure that is necessary to comply with Article IX, Ch. 10, Houston Code of Ordinances, as evidenced by an order of the hearing official or the building and standards commission or by a citation.

New Construction: the erection of a new building, structure, or object, on a lot, site, or other property.

Relocation: any change in the location of a building, structure, or object.

Restoration: accurately recovering the form and detail of a building, structure, object, or site and its setting as it appeared at a particular period of time by means of the removal of later work, or by the replacement of missing earlier work, or both.

To be completed by PLANNING STAFF:	*Application received by:*	*Date:*
	Accepted as complete by:	*Date:*

CERTIFICATE OF APPROPRIATENESS

ALTERATION & ADDITON CHECKLIST

Well in advance of the COA application deadline contact staff to discuss your project and, if necessary, to make an appointment to meet with staff for a project consultation.

Complete all applicable items and submit with the COA application form. Staff can assist you in determining what items are required for your scope of work. An incomplete application may cause delays in processing or may be deferred to the next agenda. Application materials must clearly represent current and proposed conditions. Refer to Houston Code of Ordinances, Ch. 33 VII, Sec. 33-241 for approval criteria for alteration, rehabilitation, restoration and additions.

PROPERTY ADDRESS: 1919 HOUSTON AVE, HOUSTON, TX 77007

BUILDING TYPE

- ☐ single-family residence
- ☐ multi-family residence
- ☒ commercial building
- ☐ mixed use building
- ☐ institutional building
- ☐ garage
- ☐ carport
- ☐ accessory structure
- ☐ other

ALTERATION TYPE

- ☐ addition
- ☐ foundation
- ☐ wall siding or cladding
- ☐ windows or doors
- ☐ porch or balcony
- ☐ roof
- ☐ awning or canopy
- ☐ commercial sign
- ☐ ramp or lift
- ☐ other
- ☒ DECK BUILT PREVIOUSLY C.A. EXPIRED

WRITTEN DESCRIPTION

- ☑ property description, current conditions and any prior alterations or additions
- ☑ proposed work; plans to change any exterior features, and/or addition description
- ☐ current building material conditions and originality of any materials proposed to be repaired or replaced
- ☐ proposed new materials description; attach specification sheets if necessary

PHOTOGRAPHS label photos with description and location

- ☐ elevations of all sides
- ☐ detail photos of exterior elements subject to proposed work
- ☐ historical photos as evidence for restoration work

DRAWINGS scale like drawings the same; include all dimensions and drawing scale; label with cardinal directions

- ☑ current site plan
- ☐ proposed site plan
- ☐ current floor plans
- ☐ proposed floor plans
- ☐ current window and door schedule
- ☐ proposed window and door schedule
- ☐ demolition plan
- ☐ current roof plan
- ☐ proposed roof plan
- ☑ current elevations (all sides)
- ☐ proposed elevations (all sides)
- ☐ perspective and/or line of sight

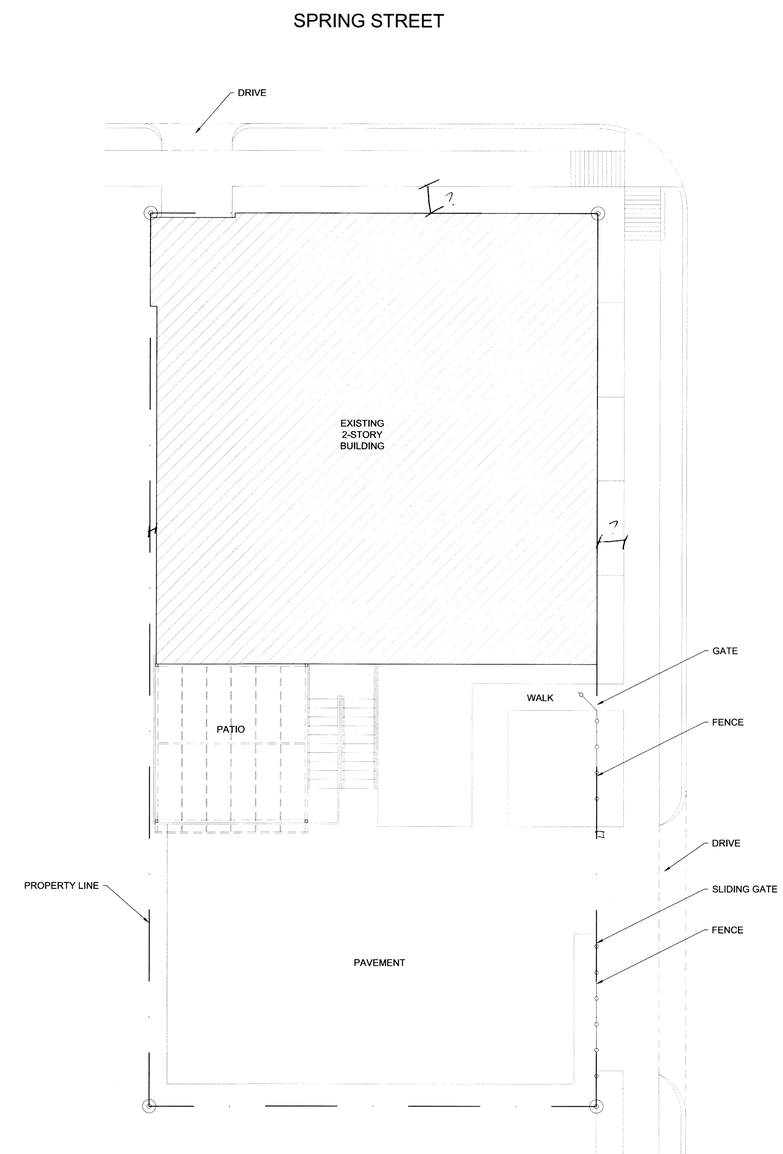

NOTE:
ALL EXISTING U.O.N.

N

SCALE: 1/8" = 1'-0"

ARCHITECTS
26029 ALDINE WESTFIELD, SUITE 301
SPRING, TX 77373
281.528.8584
www.H4ARCHITECTS.com

ALL DRAWINGS AND SPECIFICATIONS ISSUED AS PART OF THE SERVICES RENDERED BY THE ARCHITECT FOR THIS PROJECT SHALL REMAIN THE PROPERTY OF THE ARCHITECT. ANY DUPLICATION OF THE DRAWINGS AND/OR SPECIFICATIONS IN WHOLE OR IN PART FOR ANY OTHER PROJECT OR FOR COMPLETION OF THIS PROJECT BY OTHERS IS STRICTLY PROHIBITED WITHOUT THE WRITTEN CONSENT OF H4 ARCHITECTS. © 2014 H4 ARCHITECTS

SEAL

08.22.2014

HOUSTON FIRE STATION 3

1919 HOUSTON AVE.
HOUSTON, TEXAS, 77007

DAVID DENENBURG
1919 HOUSTON AVE.
HOUSTON, TEXAS, 77007

CONSULTANTS

COMPANY NAME DISCIPLINE	COMPANY PHONE # CONTACT EMAIL

REVISION

DELTA	DATE	REVISION
01	08.22.2014	CHANGE OF OCC.

PROJECT NUMBER
2014069

DRAWN BY
RH/EGL

CHECKED BY
JAH

DRAWING NAME

EXISTING SITE PLAN

DRAWING NUMBER

A-0.0

15 NORTH ELEVATION

SCALE: 3/16" = 1'-0"

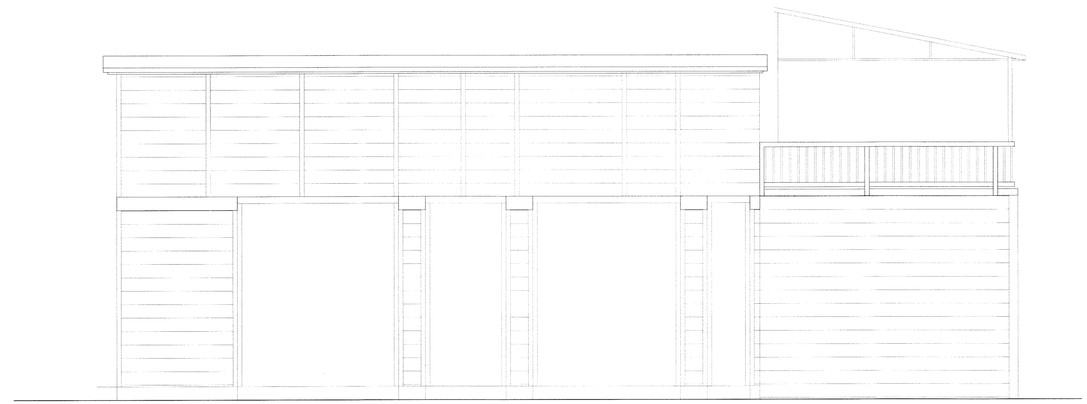

7 WEST ELEVATION

SCALE: 3/16" = 1'-0"

13 SOUTH ELEVATION

SCALE: 3/16" = 1'-0"

NOTE:
ALL EXISTING U.O.N.

5 EAST ELEVATION

SCALE: 3/16" = 1'-0"

ARCHITECTS
26029 ALDINE WESTFIELD, SUITE 301
SPRING, TX 77373
281.528.8584
www.H4ARCHITECTS.com

ALL DRAWINGS AND SPECIFICATIONS ISSUED AS PART OF THE SERVICES RENDERED BY THE ARCHITECT FOR THIS PROJECT SHALL REMAIN THE PROPERTY OF THE ARCHITECT. ANY DUPLICATION OF THE DRAWINGS AND/OR SPECIFICATIONS IN WHOLE OR IN PART FOR ANY OTHER PROJECT OR FOR COMPLETION OF THIS PROJECT BY OTHERS IS STRICTLY PROHIBITED WITHOUT THE WRITTEN CONSENT OF H4 ARCHITECTS. © 2014 H4 ARCHITECTS

SEAL

08.22.2014

HOUSTON FIRE STATION 3

1919 HOUSTON AVE.
HOUSTON, TEXAS, 77007

DAVID DENENBURG
1919 HOUSTON AVE.
HOUSTON, TEXAS, 77007

CONSULTANTS

COMPANY NAME DISCIPLINE	COMPANY PHONE # CONTACT EMAIL

REVISION

DELTA	DATE	REVISION
01	08.22.2014	CHANGE OF OCC.

PROJECT NUMBER
2014069

DRAWN BY
RH/EGL

CHECKED BY
JAH

DRAWING NAME

EXISTING BUILDING ELEVATIONS

DRAWING NUMBER

A-2.0

• NOTE: CONTRACTOR PLEASE PROVIDE A LAYER OF WIRE MESH @ ALL PLUMBING PIPES , DRAIN PITS & TILE FLOORING

NOTE: BUILDER PLEASE REFERENCE ORIGINAL ARCHS. TO VERIFY ALL DIMENSIONS.

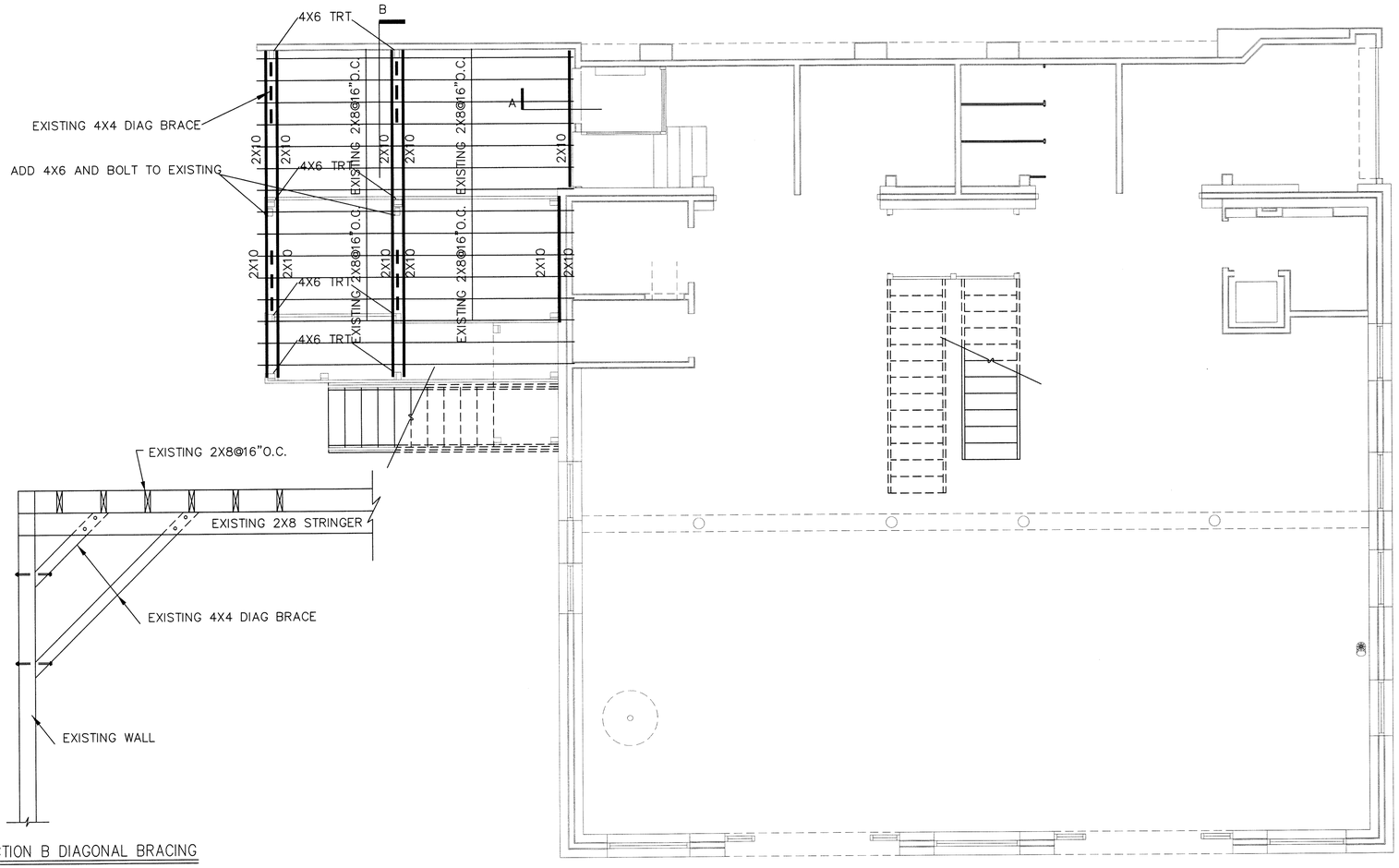

SECTION B DIAGONAL BRACING

SCALE: N.T.S.

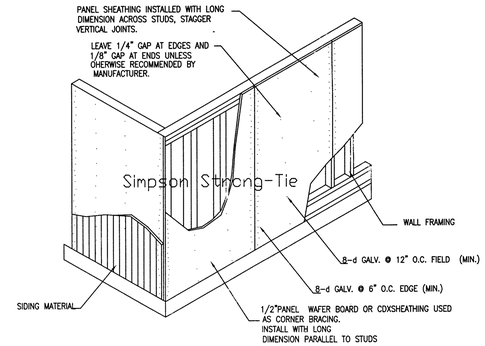

STRUCTURAL – USE PANEL WALL SHEATHING

COMMON GRADE IS SAME AS USED IN ROOF SHEATHING. USE PANEL CLIPS, TONGUE AND GROOVE PANELS, OR BLOCKING BETWEEN STUDS TO SUPPORTS EDGES. REFER TO AMERICAN PLYWOOD ASSOCIATION RECOMMENDATIONS FOR UNSUP-PORTED EDGES.

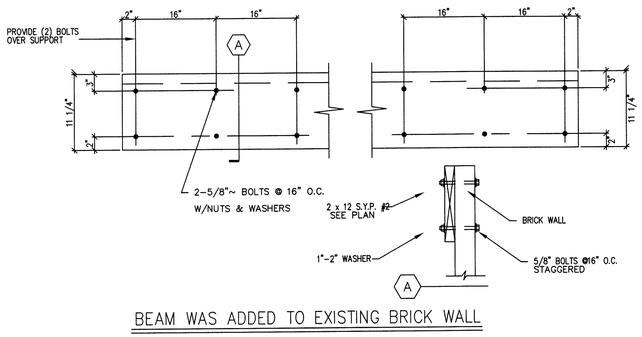

BEAM WAS ADDED TO EXISTING BRICK WALL

SCALE: N.T.S.

SITE OBSERVATIONS ARE REQUIRED FOR ALL PEIR WORK, FOUNDATION MAKE-UP AND COMPLETED FRAMING. THE USE OF THESE DRAWINGS SIGNIFIES THE OWNER/CONTRACTOR'S AGREEMENT THAT EFH CONSULTING ENGINEERS, INC. SHALL NOT BE LIABLE FOR ANY CONSTRUCTION THAT HAS NOT BEEN OBSERVED AND APPROVED IN WRITING BY EFH CONSULTING ENGINEERS, INC. IN ABSCENCE OF SUCH SITE OBSERVATION AND APPROVAL, EFH CONSULTING ENGINEERS, INC. MAKES NO PRESENTATIONS OF SUITABILITY, EXPRESS OR IMPLIED, WITH REFERENCE TO THESE DRAWINGS.

OWNER/CONTRACTOR AGREES TO INDEMNIFY AND HOLD HARMLESS EFH CONSULTING ENGINEERS, INC. FOR ALL DAMAGES, COSTS AND ATTORNEY'S FEES THAT EFH CONSULTING ENGINEERS, INC. MAY INCUR AS A RESULT OF ANY LITIGATION ARISING OUT OF THIS PROJECT IF EFH CONSULTING ENGINEERS, INC. HAS NOT REVIEWED THE CONSTRUCTION WORK AND APPROVED IT. IN CHOOSING TO BUILD WITHOUT THIS SITE OBSERVATION AND APPROVAL, OWNER/CONTRAC-TOR AGREES THAT HE/THEY DESIRE TO LIMIT EXPENSE AND HE/THEY HAVE MADE AN INFORMED BUSINESS DECISION TO BE TOTALLY RESPONSIBLE FOR SAID CONSTRUCTION.

EXISTING FLOOR FRAMIG PLAN

LOT: BLK: SEC:

REVISIONS/DATE
REVISION 1 2-3-05
2-14-05

SCALE: 1/4" =1'-0"
DRAWN BY: EFH
DATE DRAWN: 6.8.15
CHECKED BY: EFH

CLIENT: STATION #3
PROJECT: 1919 HOUSTON AVE
LOCATION: HOUSTON, TEXAS

FIRM F-4921

EFH E.HOURANI CONSULTING ENGINEERS, INC.
2906 CARROLTON ST. HOUSTON, TEXAS 77023 TEL: 713-926-2490 FAX: 713-924-6061

SHEET NUMBER
SHEET: S-1

• NOTE: CONTRACTOR PLEASE PROVIDE A LAYER OF WIRE MESH @ ALL PLUMBING PIPES , DRAIN PITS & TILE FLOORING

NOTE: BUILDER PLEASE REFERENCE ORIGINAL ARCHS. TO VERIFY ALL DIMENSIONS.

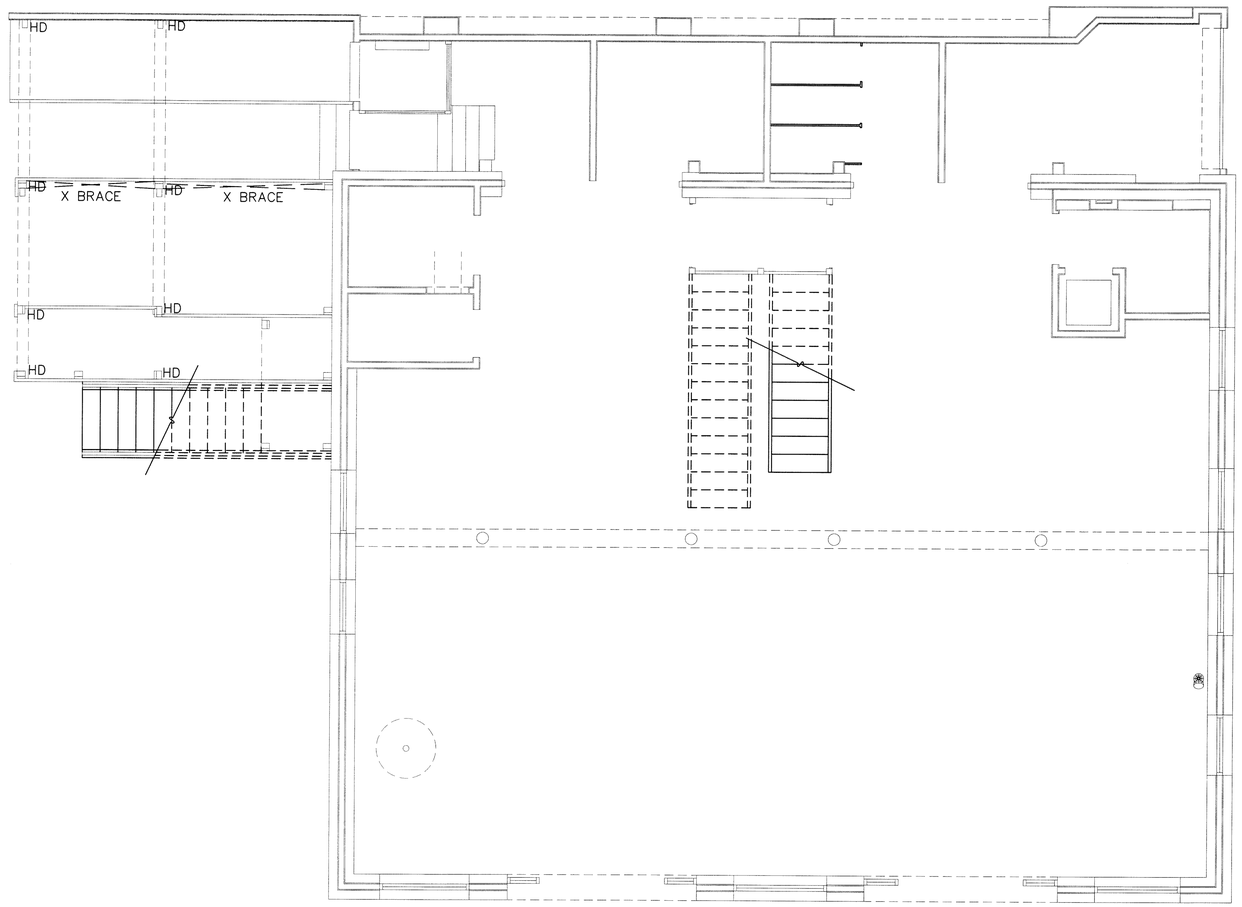

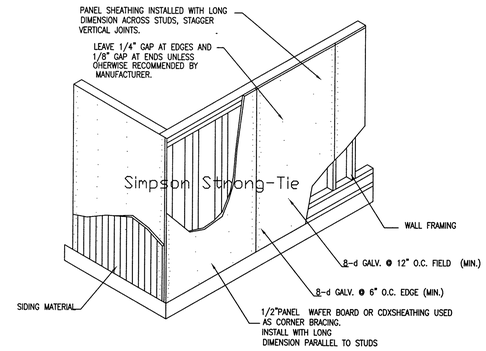

STRUCTURAL – USE PANEL WALL SHEATHING

COMMON GRADE IS SAME AS USED IN ROOF SHEATHING. USE PANEL CLIPS, TONGUE AND GROOVE PANELS, OR BLOCKING BETWEEN STUDS TO SUPPORTS EDGES. REFER TO AMERICAN PLYWOOD ASSOCIATION RECOMMENDATIONS FOR UNSUP-PORTED EDGES.

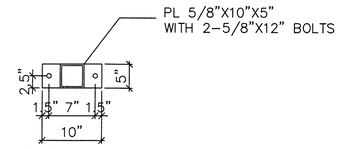

TS COLUMN TO BASE PLATE DETAIL

SECTION 1-1

N.T.S.

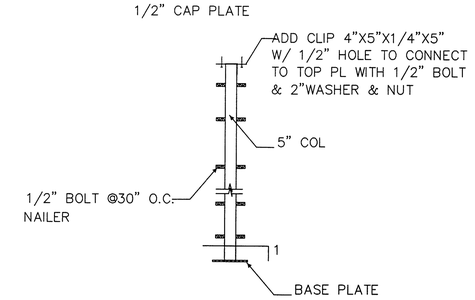

SITE OBSERVATIONS ARE REQUIRED FOR ALL PEIR WORK, FOUNDATION MAKE-UP AND COMPLETED FRAMING. THE USE OF THESE DRAWINGS SIGNIFIES THE OWNER/CONTRACTOR'S AGREEMENT THAT EFH CONSULTING ENGINEERS, INC. SHALL NOT BE LIABLE FOR ANY CONSTRUCTION THAT HAS NOT BEEN OBSERVED AND APPROVED IN WRITING BY EFH CONSULTING ENGINEERS, INC. IN ABSCENCE OF SUCH SITE OBSERVATION AND APPROVAL, EFH CONSULTING ENGINEERS, INC. MAKES NO PRESENTATIONS OF SUITABILITY, EXPRESS OR IMPLIED, WITH REFERENCE TO THESE DRAWINGS.

OWNER/CONTRACTOR AGREES TO INDEMNIFY AND HOLD HARMLESS EFH CONSULTING ENGINEERS, INC. FOR ALL DAMAGES, COSTS AND ATTORNEY'S FEES THAT EFH CONSULTING ENGINEERS, INC. MAY INCUR AS A RESULT OF ANY LITIGATION ARISING OUT OF THIS PROJECT IF EFH CONSULTING ENGINEERS, INC. HAS NOT REVIEWED THE CONSTRUCTION WORK AND APPROVED IT. IN CHOOSING TO BUILD WITHOUT THIS SITE OBSERVATION AND APPROVAL, OWNER/CONTRAC-TOR AGREES THAT HE/THEY DESIRE TO LIMIT EXPENSE AND HE/THEY HAVE MADE AN INFORMED BUSINESS DECISION TO BE TOTALLY RESPONSIBLE FOR SAID CONSTRUCTION.

HOLD DOWN & BRACE PLAN #:

LOT: BLK: SEC:

REVISIONS/DATE
REVISION #1: 3-05
#2: 4-14-05

SCALE: 1/4" =1'-0"
DRAWN BY: EFH
DATE DRAWN: 5.8.15
CHECKED BY: EFH

CLIENT: STATION #3
PROJECT: 1919 HOUSTON AVE.
LOCATION: HOUSTON, TEXAS

FIRM F-4921

EFH E. HOURANI CONSULTING ENGINEERS, INC.
2906 CARROLTON ST. HOUSTON, TEXAS 77023 TEL: 713-926-2490 FAX: 713-924-6061

SHEET NUMBER

SHEET: S-2