CERTIFICATE OF APPROPRIATENESS
APPLICATION FORM

PLANNING & DEVELOPMENT DEPARTMENT

PROPERTY

Address 402 Main Street - Citizens Bank Building

Historic District / Landmark Main Street HCAD # 0010440000005

Subdivision SSBB Lot Lot 5 Block 44

DESIGNATION TYPE

- ☐ Landmark
- ☐ Protected Landmark
- ☐ Archaeological Site
- ☒ Contributing
- ☐ Noncontributing
- ☐ Vacant

PROPOSED ACTION

- ☒ Alteration or Addition
- ☒ Restoration
- ☐ New Construction
- ☐ Relocation
- ☐ Demolition
- ☐ Excavation

DOCUMENTS

☒ Application checklist for each proposed action and all applicable documentation listed within are attached

OWNER

Name 914 Preston LP

Company

Mailing Address

402 Main Street, Penthouse, Houston, TX 77002

Phone 713-225-2552

Email [redacted]

Signature

Date 11/24/2015

APPLICANT (if other than owner)

Name

Company

Mailing Address

Phone

Email

Signature

Date

ACKNOWLEDGEMENT OF RESPONSIBILITY

Requirements: A complete application includes all applicable information requested on checklists to provide a complete and accurate description of existing and proposed conditions. Preliminary review meeting or site visit with staff may be necessary to process the application. Owner contact information and signature is required. Late or incomplete applications will not be considered.

Deed Restrictions: You have verified that the work does not violate applicable deed restrictions.

Public Records: If attached materials are protected by copyright law, you grant the City of Houston, its officers, agencies, departments, and employees, non-exclusive rights to reproduce, distribute and publish copyrighted materials before the Houston Archaeological and Historical Commission, the Planning Commission, City Council, and other City of Houston commissions, agencies, and departments, on a City of Houston website, or other public forum for the purposes of application for a Certificate of Appropriateness or building permit, and other educational and not for profit purposes. You hereby represent that you possess the requisite permission or rights being conveyed here to the City.

Compliance: If granted, you agree to comply with all conditions of the COA. Revisions to approved work require staff review and may require a new application and HAHC approval. Failure to comply with the COA may result in project delays, fines or other penalties.

Planner: _____ *Application received:* ___ / ___ / ___ *Application complete:* ___ / ___ / ___

CERTIFICATE OF APPROPRIATENESS
ALTERATION & ADDITON CHECKLIST

PLANNING & DEVELOPMENT DEPARTMENT

<u>Well in advance</u> of the COA application deadline contact staff to discuss your project and, if necessary, to make an appointment to meet with staff for a project consultation.

Complete all applicable items and submit with the COA application form. Staff can assist you in determining what items are required for your scope of work. An incomplete application may cause delays in processing or may be deferred to the next agenda. Application materials must clearly represent current and proposed conditions. Refer to Houston Code of Ordinances, Ch. 33 VII, Sec. 33-241 for approval criteria for alteration, rehabilitation, restoration and additions.

PROPERTY ADDRESS: 402 Main Street - Citizens Bank Building

BUILDING TYPE

- ☐ single-family residence
- ☐ multi-family residence
- ■ commercial building
- ☐ mixed use building
- ☐ institutional building
- ☐ garage
- ☐ carport
- ☐ accessory structure
- ☐ other

ALTERATION TYPE

- ☐ addition
- ☐ foundation
- ☐ wall siding or cladding
- ■ windows or doors
- ☐ porch or balcony
- ☐ roof
- ☐ awning or canopy
- ■ commercial sign
- ☐ ramp or lift
- ■ other

WRITTEN DESCRIPTION

- ■ property description, current conditions and any prior alterations or additions
- ■ proposed work; plans to change any exterior features, and/or addition description
- ■ current building material conditions and originality of any materials proposed to be repaired or replaced
- ■ proposed new materials description; attach specification sheets if necessary

PHOTOGRAPHS label photos with description and location

- ☐ elevations of all sides
- ■ detail photos of exterior elements subject to proposed work
- ☐ historical photos as evidence for restoration work

DRAWINGS scale like drawings the same; include all dimensions and drawing scale; label with cardinal directions

- ☐ current site plan
- ☐ proposed site plan
- ☐ current floor plans
- ☐ proposed floor plans
- ☐ current window and door schedule
- ■ proposed window and door schedule
- ☐ demolition plan
- ☐ current roof plan
- ☐ proposed roof plan
- ☐ current elevations (all sides)
- ■ proposed elevations (all sides)
- ☐ perspective and/or line of sight

CERTIFICATE OF APPROPRIATENESS
APPLICATION INSTRUCTIONS

PLANNING & DEVELOPMENT DEPARTMENT

<u>Well in advance</u> of the COA application deadline contact staff to discuss your project, application requirements, and, if necessary, to make an appointment to meet with staff for a project consultation. Visit the Historic Preservation Web Manual for historic district profiles, project guidance and forms.
www.houstontx.gov/HistoricPreservationManual

Historic Preservation Office	**832.393.6556**	**historicpreservation@houstontx.gov**

SUBMISSION INSTRUCTIONS

To submit application to Planning Department:

- email documents to historicpreservation@houstontx.gov (attachments must be less than 10MB)
- send a Dropbox shared folder invitation to historicpreservation@houstontx.gov, or
- contact staff to set up an appointment to drop off a disc or flash drive.

MEETING SCHEDULE

- Applications are due **22 calendar days** in advance of the HAHC meeting by **12 PM (noon)** on the deadline date. Exception: revisions to items deferred or denied at the previous HAHC meeting are due 15 days in advance of the scheduled meeting.
- Application deadlines are firm. All materials must be submitted by the deadline to be considered at the following HAHC meeting. Designs must be final at time of application; revisions will not be accepted after the deadline.
- HAHC will not accept new material or redesigns presented at the HAHC meeting. Deferral until the following month's meeting may be necessary in such cases to allow for adequate review by staff and commissioners.
- HAHC monthly meetings are held at 3:00 PM at City Hall Annex, 900 Bagby Street, City Council Chambers, Public Level.

2015 Meeting Dates (Thursdays unless noted otherwise)	**COA Application Deadlines**	**Demolition / Relocation Posted Sign Deadlines**
January 29	January 7	January 19
February 26	February 4	February 16
March 26	March 4	March 16
April 23	April 1	April 13
May 21	April 29	May 11
June 18	May 27	June 8
July 22 (Wednesday)	June 30	July 12
August 27	August 5	August 17
September 24	September 2	September 14
October 22	September 30	October 12
November 19	October 28	November 9
December 16 (Wednesday)	November 24	December 6

CERTIFICATE OF APPROPRIATENESS APPLICATION
PART I – GENERAL FORM

PLANNING & DEVELOPMENT DEPARTMENT

DEFINITIONS

Addition: any expansion to an existing building, structure or object**.**

Alteration: any change to the exterior of a building or structure, including adding, moving, removing or replacing an exterior feature.

Demolition: an act or process that destroys in whole, or a majority of, any building, structure, object or site.

Excavation: to expose, uncover, or remove by digging, cutting or hollowing out.

Exterior Feature: an element of the architectural character and the general arrangement of the external portion of a building, structure or object, including building materials.

Mandatory Repair: a repair of a building or structure that is necessary to comply with Article IX, Ch. 10, Houston Code of Ordinances, as evidenced by an order of the hearing official or the building and standards commission or by a citation.

New Construction: the erection of a new building, structure, or object, on a lot, site, or other property.

Relocation: any change in the location of a building, structure, or object.

Restoration: accurately recovering the form and detail of a building, structure, object, or site and its setting as it appeared at a particular period of time by means of the removal of later work, or by the replacement of missing earlier work, or both.

To be completed by PLANNING STAFF:	*Application received by:*	*Date:*
	Accepted as complete by:	*Date:*

CITIZENS BANK
402
MAIN

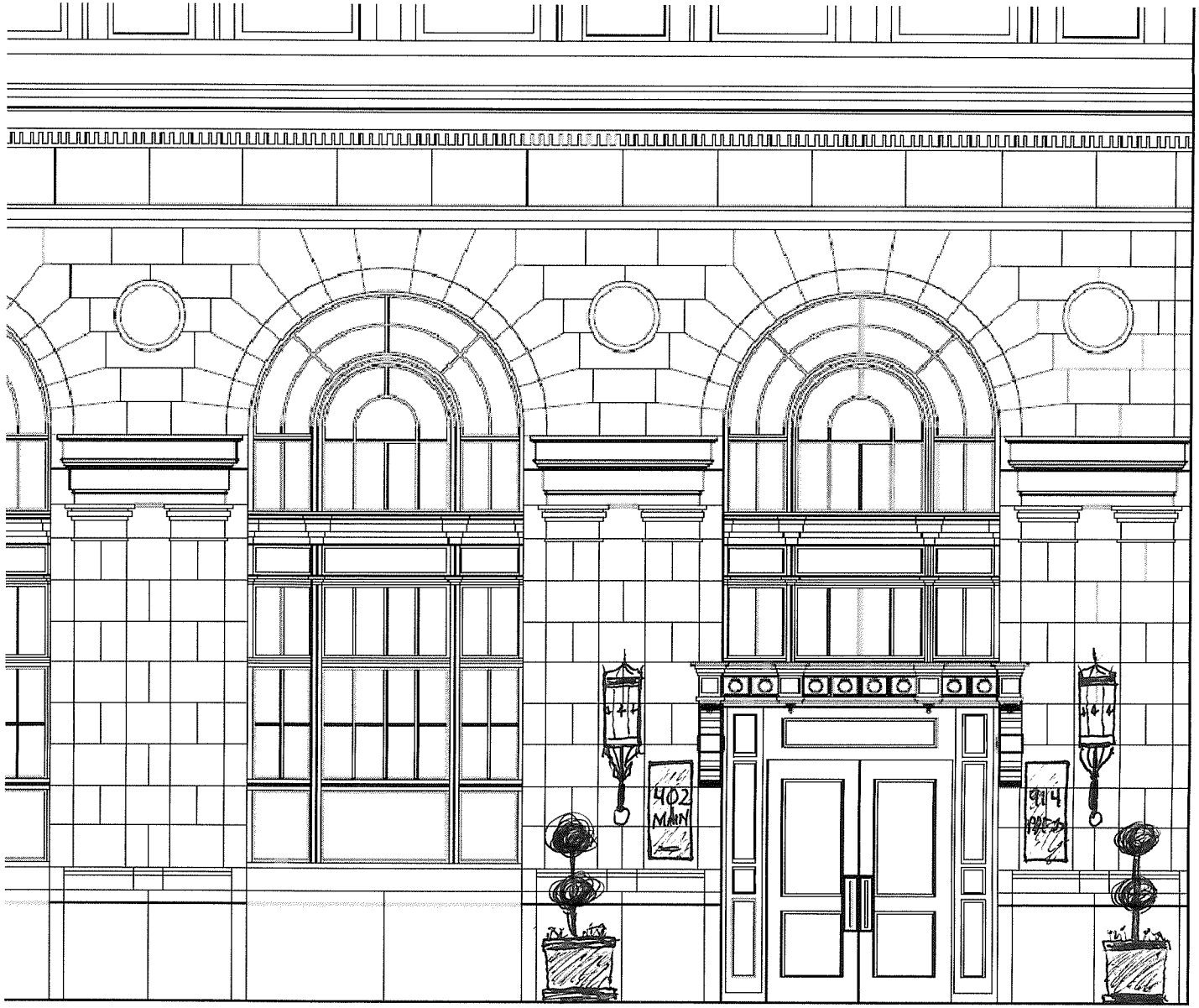
402
MAIN
914

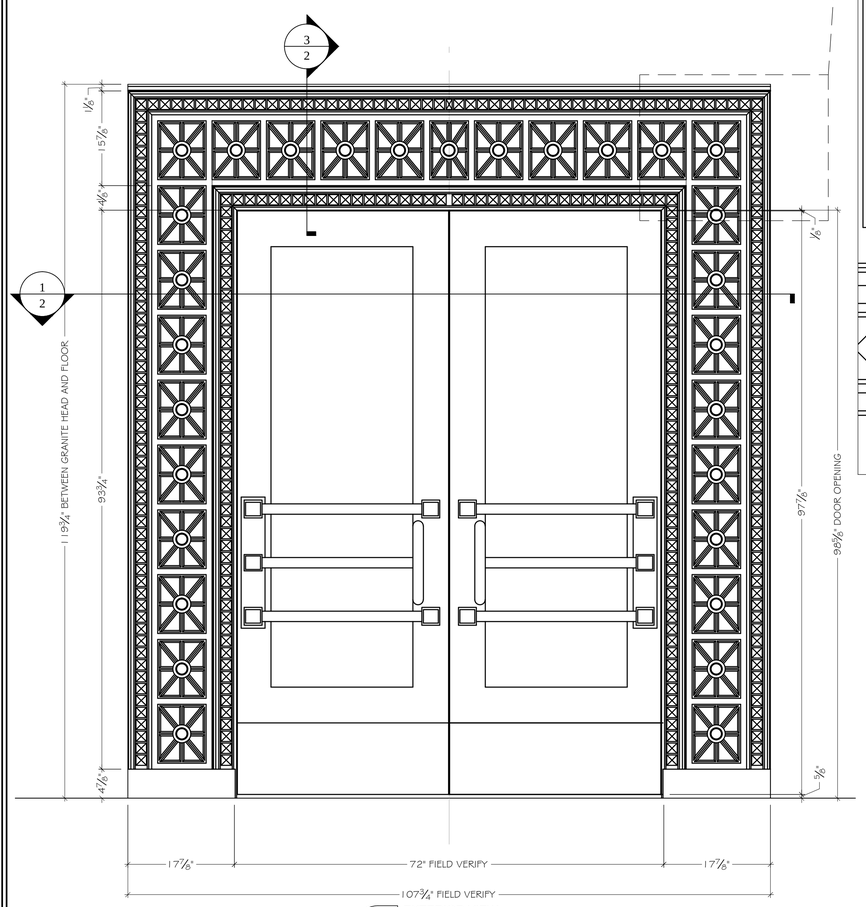

A EXTERIOR VIEW
ELEVATION
RE: 1"=1'-0"

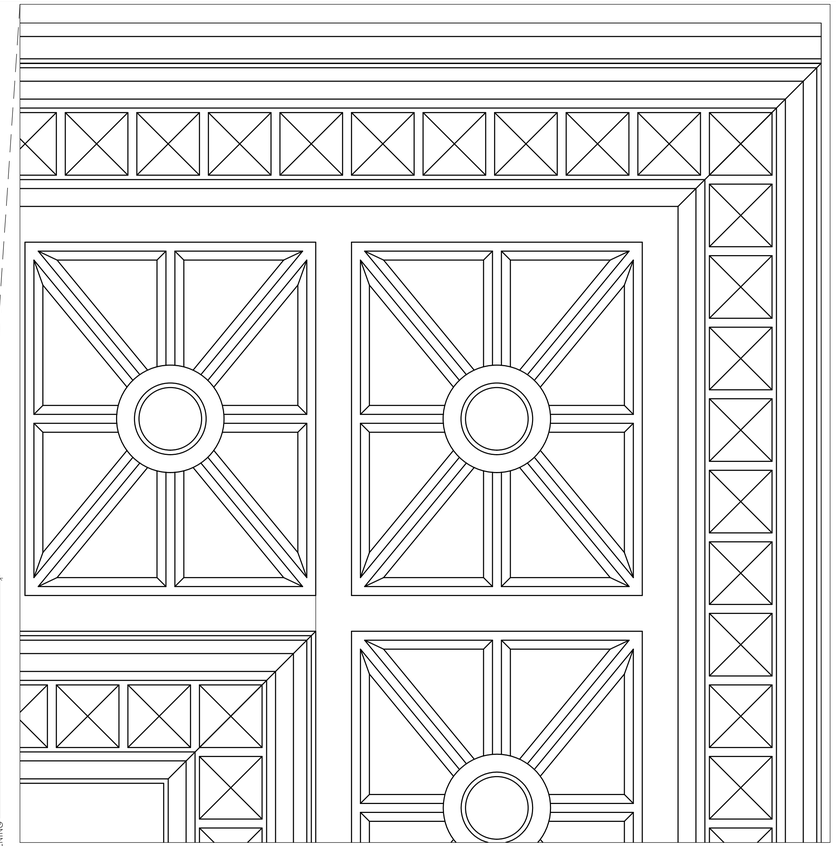

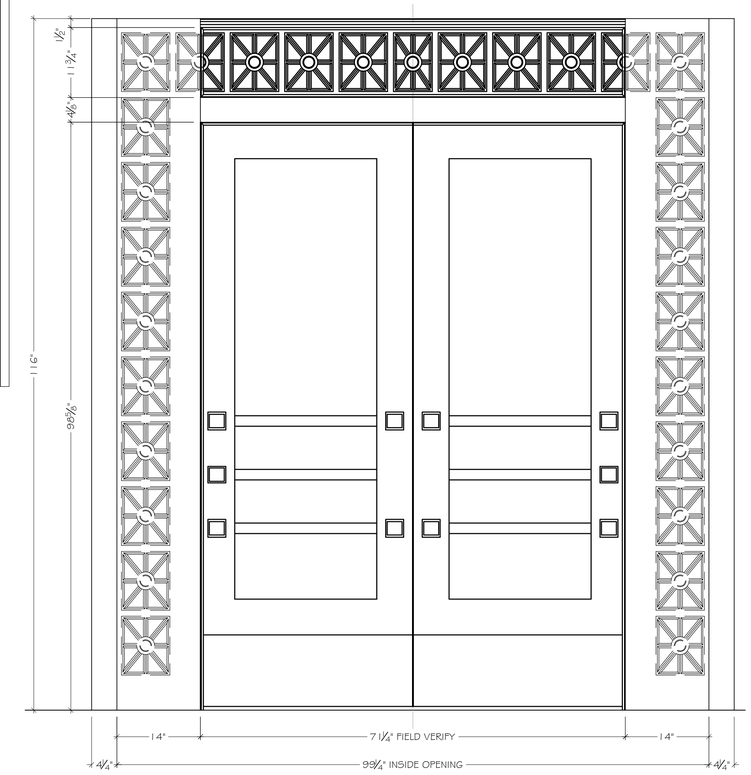

B INTERIOR VIEW
ELEVATION
RE: 1"=1'-0"

Advanced Architectural Metals, Inc.
6100 BRITTMOORE
BLDG S
HOUSTON, TEXAS 77041
PH. (713) 983-9979 FAX (713) 849-5889

PROJECT: 402 MAIN 402 MAIN STREET HOUSTON, TEXAS				REVISION NO.:
SIZE: D	ITEM: ENTRY DOORS			SHEET: 1
SCALE: AS NOTED	DRAWN BY: JWB	DATE: 11/20/2015	FIELD DIMENSION DATE:	OF 4

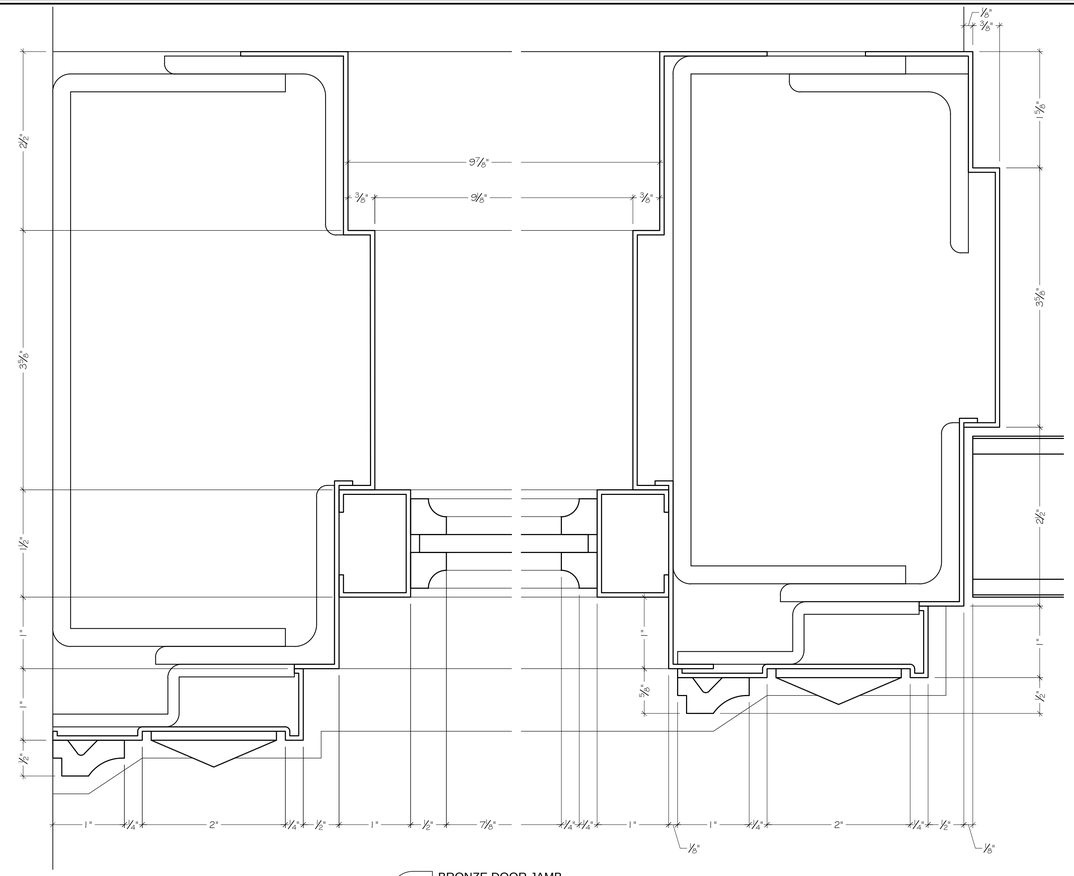

2 BRONZE DOOR JAMB
F/S DETAIL
RE: 12"=1'-0"

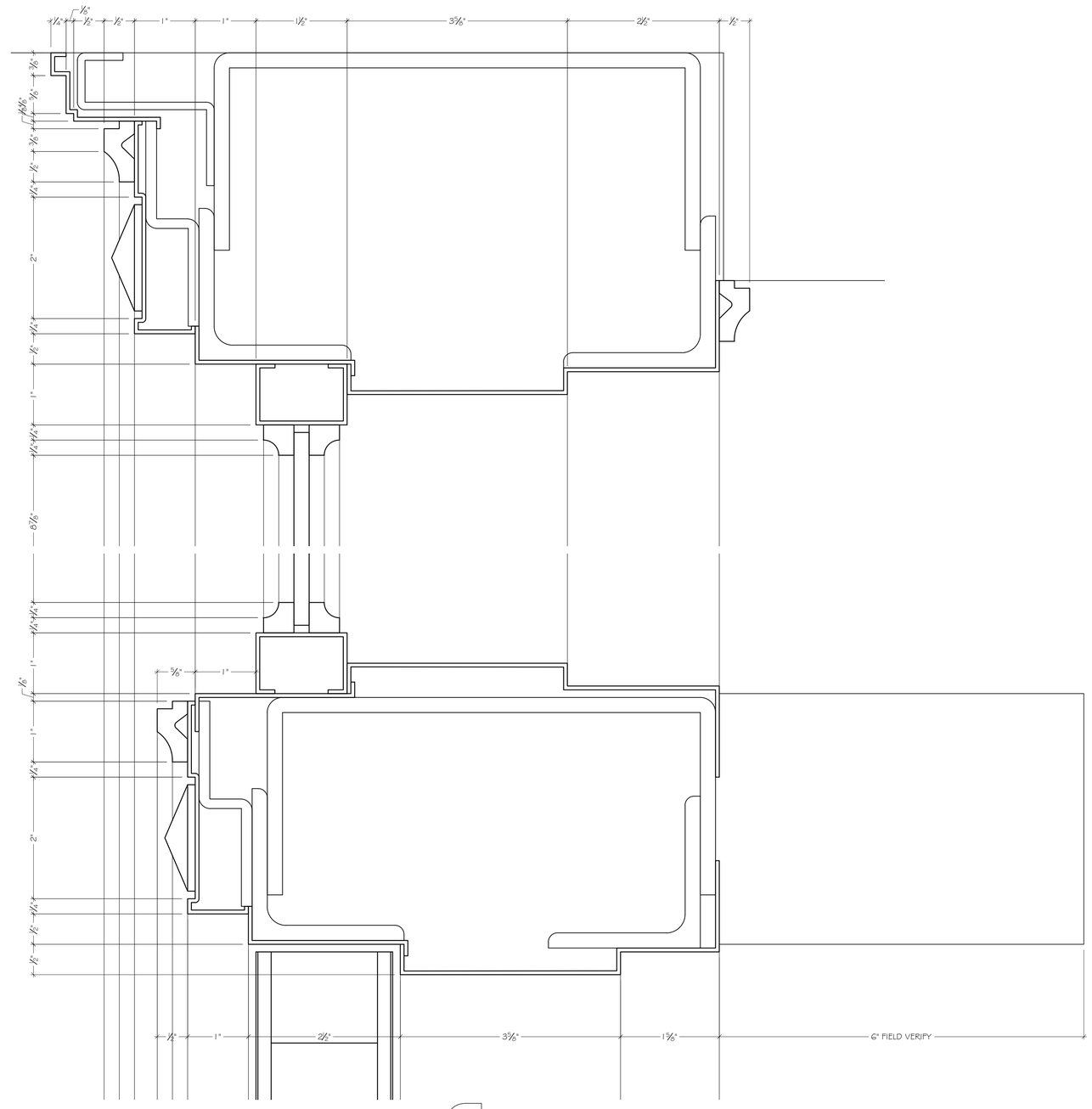

3 VERTICAL SECTION DETAIL
RE: 1 1/2"=1'-0"

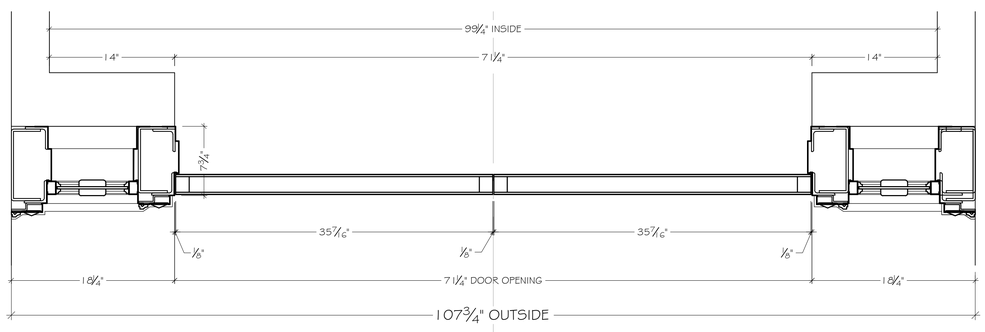

1 SECTION THRUOUGH DOOR
PLAN SECTION
RE: 1 1/2"=1'-0"

Advanced Architectural Metals, Inc.
6100 BRITTMOORE
BLDG S
HOUSTON, TEXAS 77041
PH. (713) 983-9979 FAX (713) 849-5889

PROJECT: 402 MAIN, 402 MAIN STREET, HOUSTON, TEXAS				REVISION NO.:
SIZE: D	ITEM: ENTRY DOORS			SHEET: 2 OF 4
SCALE: AS NOTED	DRAWN BY: JWB	DATE: 11/20/2015	FIELD DIMENSION DATE:	

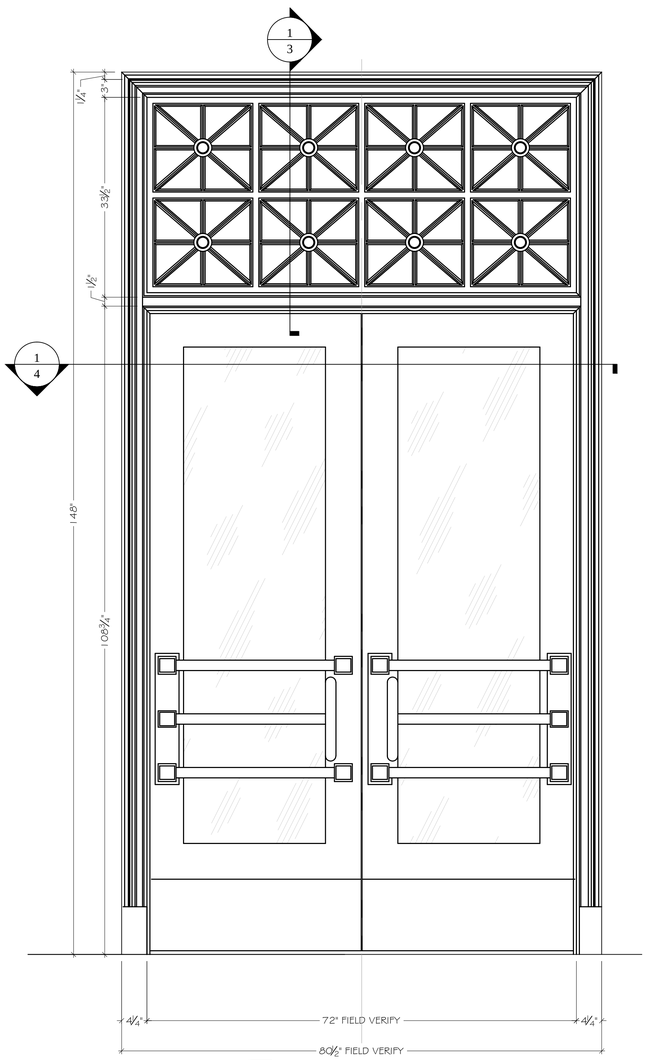

A EXTERIOR VIEW
ELEVATION
RE: 1"=1'-0"

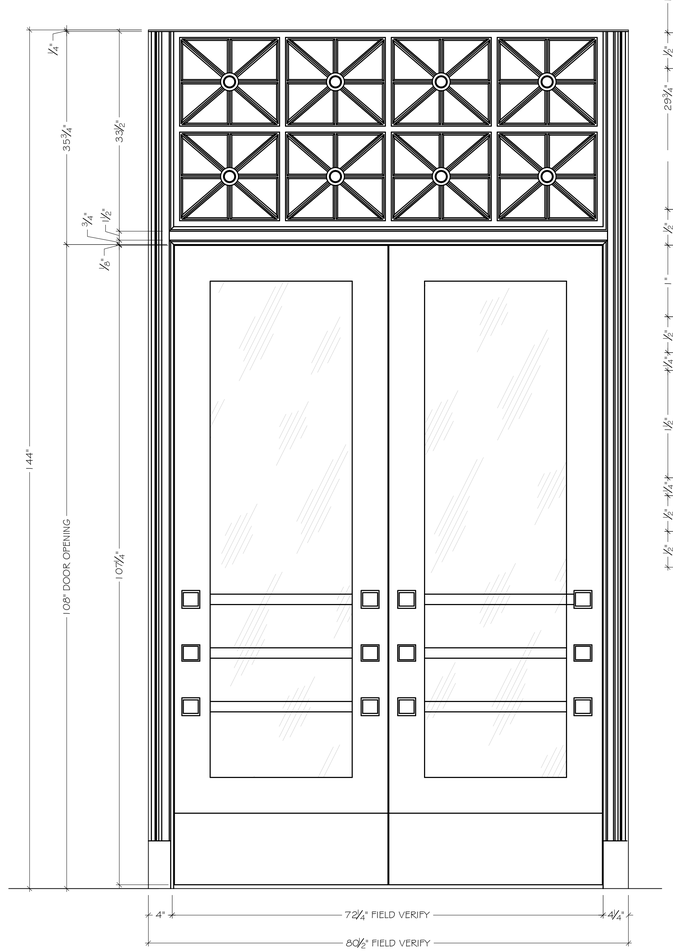

B INTERIOR VIEW
ELEVATION
RE: 1"=1'-0"

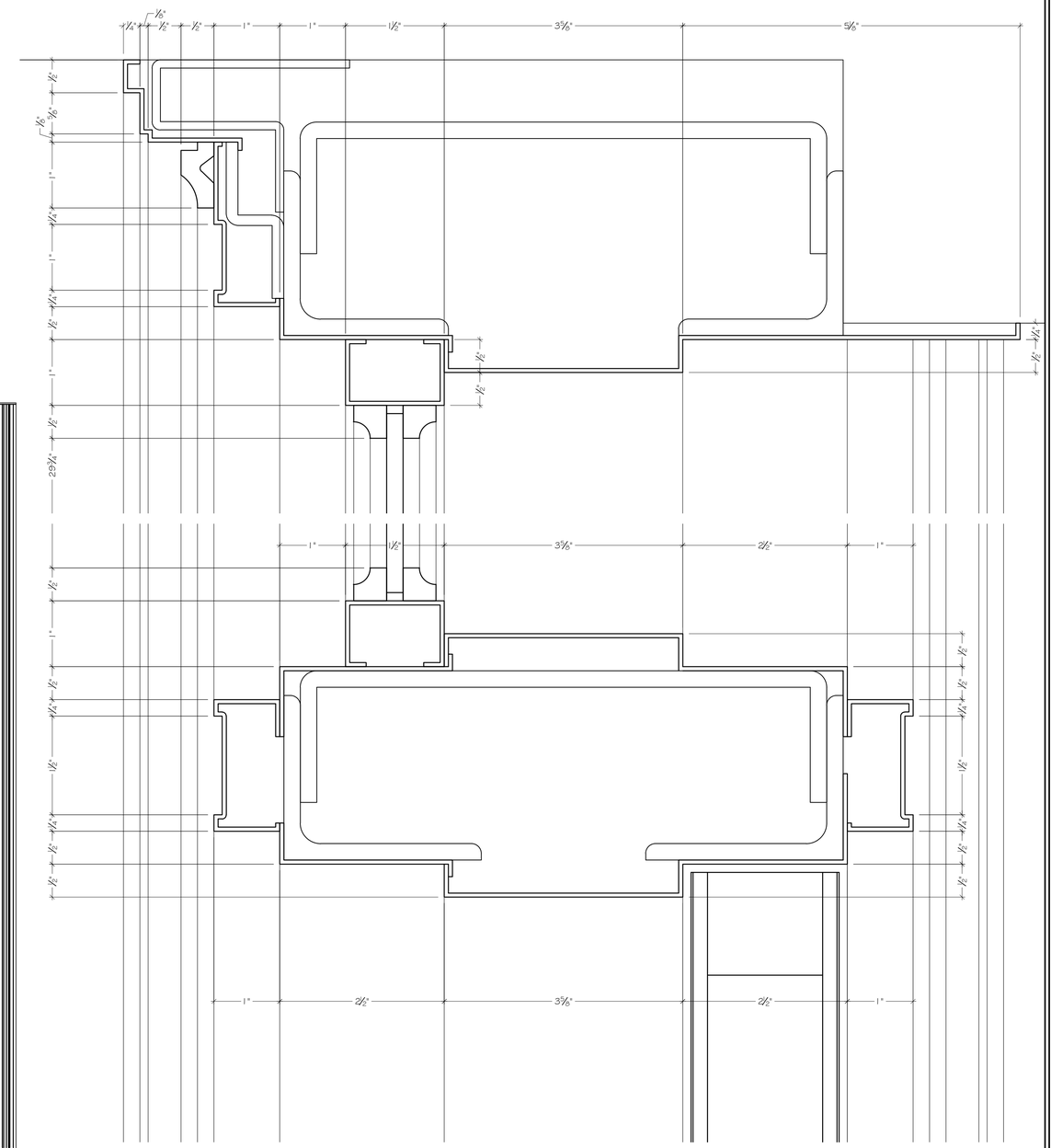

1 VERTICAL SECTION DETAIL
RE: 1 1/2"=1'-0"

Advanced Architectural Metals, Inc.
6100 BRITTMOORE
BLDG S
HOUSTON, TEXAS 77041
PH. (713) 983-9979 FAX (713) 849-5889

PROJECT: 402 MAIN 402 MAIN STREET HOUSTON, TEXAS		REVISION NO.:
SIZE: D	ITEM: ENTRY DOORS	SHEET: 3 OF 4
SCALE: AS NOTED	DRAWN BY: JWB / DATE: 11/20/2015	FIELD DIMENSION DATE:

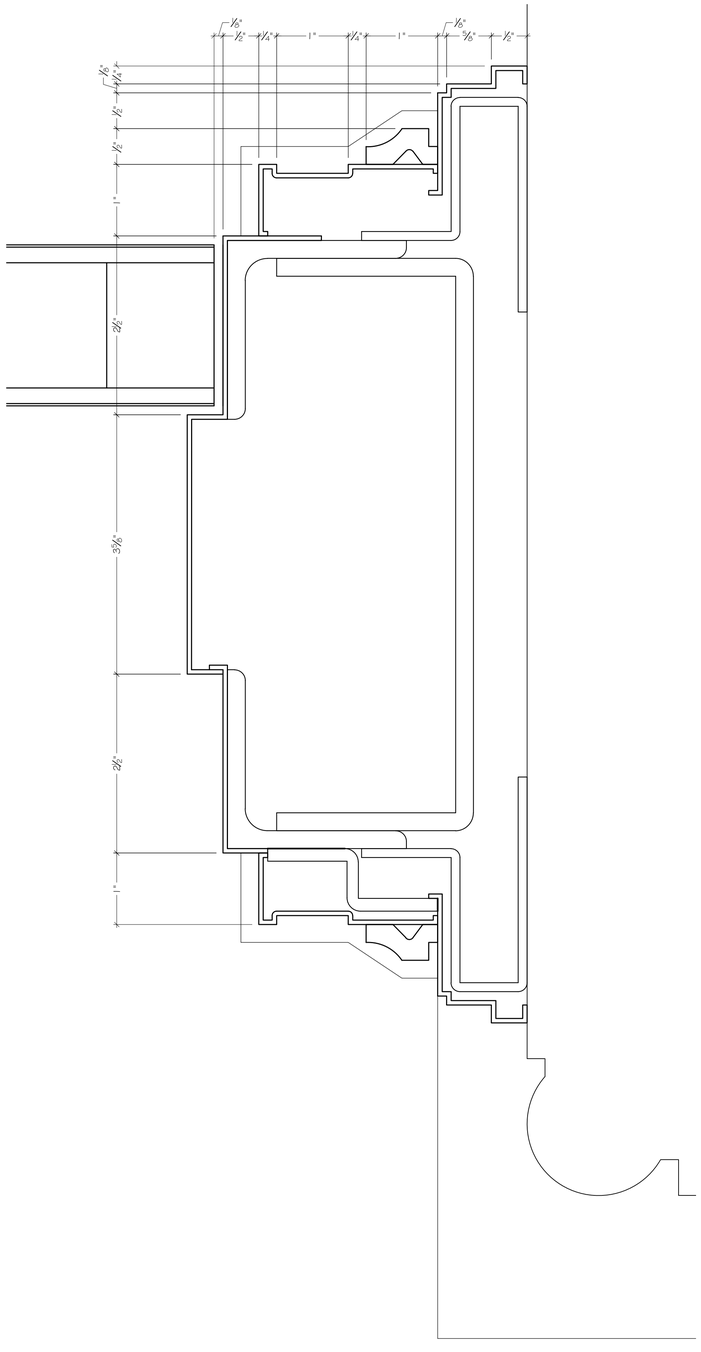

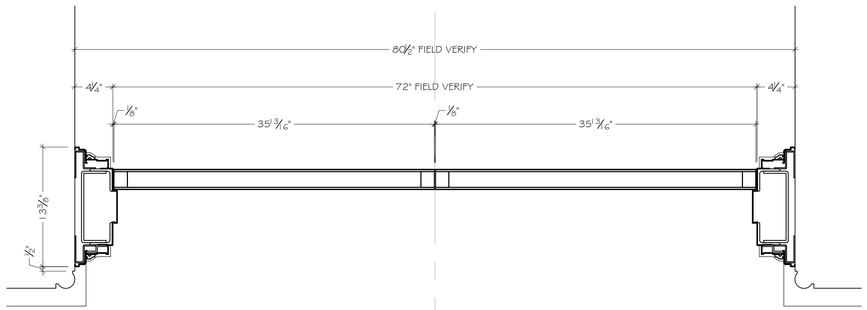

1 SECTION THRUOUGH DOOR
PLAN SECTION
RE: 1 1/2"=1'-0"

4 BRONZE DOOR JAMB
F/S DETAIL
RE: 12"=1'-0"

Advanced Architectural Metals, Inc.
6100 BRITTMOORE
BLDG S
HOUSTON, TEXAS 77041
PH. (713) 983-9979 FAX (713) 849-5889

PROJECT: 402 MAIN 402 MAIN STREET HOUSTON, TEXAS	REVISION NO.:
SIZE: D / ITEM: ENTRY DOORS	SHEET: 4
SCALE: AS NOTED / DRAWN BY: JWB / DATE: 11/20/2015 / FIELD DIMENSION DATE:	OF 4