# CERTIFICATE OF APPROPRIATENESS
## APPLICATION FORM

PLANNING & DEVELOPMENT DEPARTMENT

### PROPERTY

Address 1020 Columbia St Houston, TX 77008

Historic District / Landmark Houston Heights HCAD # 0202170000017

Subdivision Houston Heights Lot 17 Block 221

### DESIGNATION TYPE

- ☐ Landmark
- ☐ Protected Landmark
- ☐ Archaeological Site
- ☐ Contributing
- ☑ Noncontributing
- ☐ Vacant

### PROPOSED ACTION

- ☑ Alteration or Addition
- ☐ Restoration
- ☐ New Construction
- ☐ Relocation
- ☐ Demolition
- ☐ Excavation

### DOCUMENTS

☑ Application checklist for each proposed action and all applicable documentation listed within are attached

### OWNER

Name Justin and Sita Feinberg

Company N/A

Mailing Address 1020 Columbia St

Houston, TX 77008

Phone 917-617-6598

Email [redacted]

Signature

Date 6/23/15

### APPLICANT (if other than owner)

Name Amanda Simons

Company Texas Solar Outfitters

Mailing Address 705 Shephard Dr

Houston, TX 77007

Phone 713-802-0223

Email [redacted]

Signature

Date 6/23/15

### ACKNOWLEDGEMENT OF RESPONSIBILITY

**Requirements**: A complete application includes all applicable information requested on checklists to provide a complete and accurate description of existing and proposed conditions. Preliminary review meeting or site visit with staff may be necessary to process the application. Owner contact information and signature is required. Late or incomplete applications will not be considered.

**Deed Restrictions:** You have verified that the work does not violate applicable deed restrictions.

**Public Records**: If attached materials are protected by copyright law, you grant the City of Houston, its officers, agencies, departments, and employees, non-exclusive rights to reproduce, distribute and publish copyrighted materials before the Houston Archaeological and Historical Commission, the Planning Commission, City Council, and other City of Houston commissions, agencies, and departments, on a City of Houston website, or other public forum for the purposes of application for a Certificate of Appropriateness or building permit, and other educational and not for profit purposes. You hereby represent that you possess the requisite permission or rights being conveyed here to the City.

**Compliance:** If granted, you agree to comply with all conditions of the COA. Revisions to approved work require staff review and may require a new application and HAHC approval. Failure to comply with the COA may result in project delays, fines or other penalties.

*Planner.* _____ *Application received:* ___/___/___ *Application complete:* ___/___/___

*Rev. 02.2015*

TEXAS SOLAR OUTFITTERS
COVER SHEET

1020 Columbia St, Houston, TX 77008

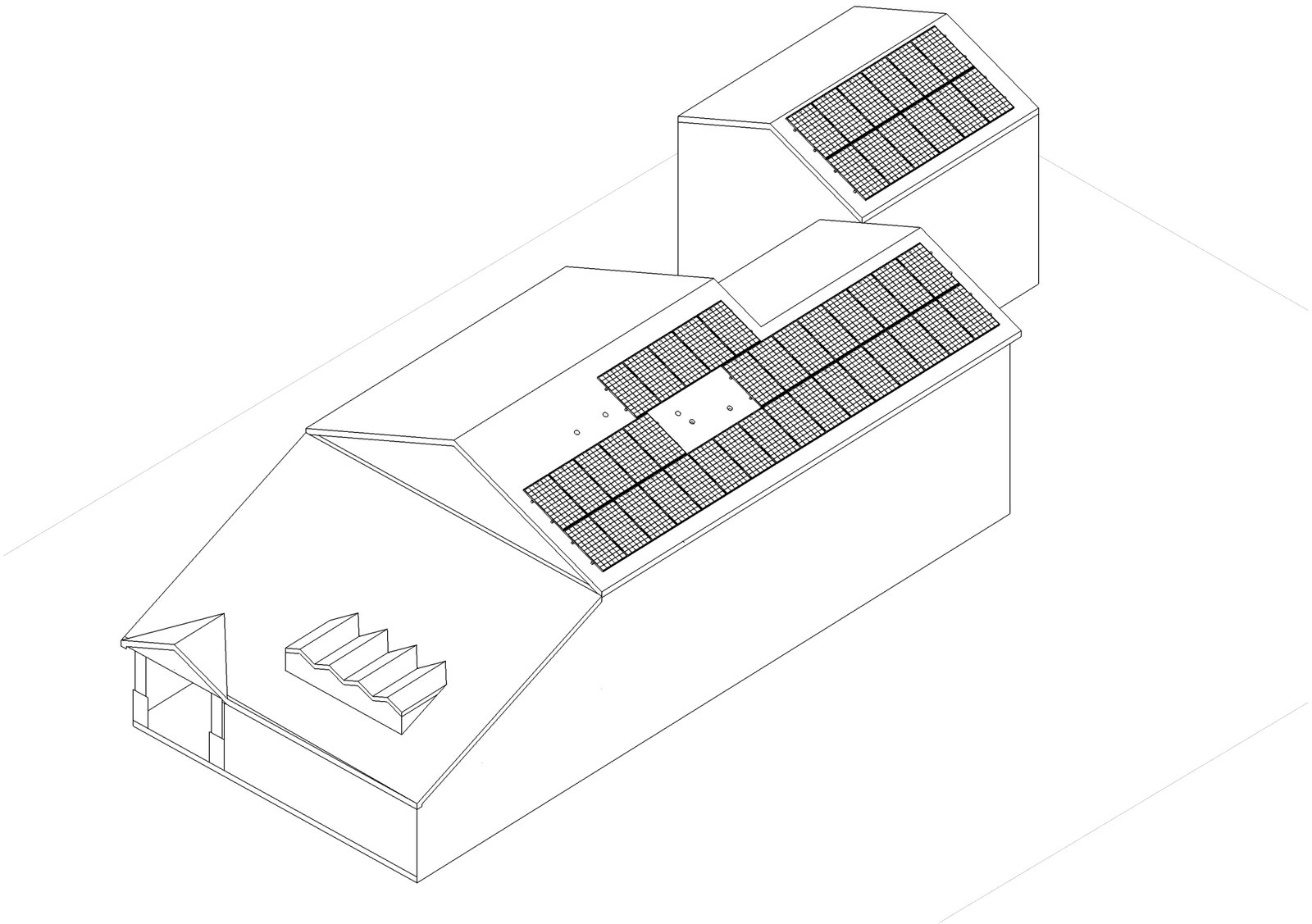

# Feinberg Residence

1020 Columbia St,
Houston, TX 77008

# 12.42kW ROOF MOUNT

| DRAWING INDEX | NOTES |
|---|---|
| C.S Coversheet<br>A.1 Site Plan<br>E.1 One Line Diagram<br>E.2 Three Line Diagram<br>E.3 Stringing Layout<br>S.1 Rails Layout<br>S.2 Wind Calcs | **1. IN COMPLIANCE WITH NEC ARTICLE 110.2 FOR EQUIPMENT TO BE APPROVED, IDENTIFIED LABELED AND LISTED** |


TEXAS SOLAR OUTFITTERS
705 SHEPHERD DR.
HOUSTON, TEXAS 77007
713-802-0223


## COVER SHEET

SCALE: NTS

PROJECT NO.: 15030

SHEET NO.: CS

REVISIONS

| MM/DD/YY | DESIGN: | CHECK: | COMMENTS: |
|---|---|---|---|
| 6/19/2015 | DG | | ISSUE FOR REVIEW |
| -/-/- | DG | | ISSUE FOR CONSTRUCTION |
| | | | |
| | | | |
| | | | |

# TEXAS SOLAR OUTFITTERS
## SITE PLAN

1020 Columbia St, Houston, TX 77008

N

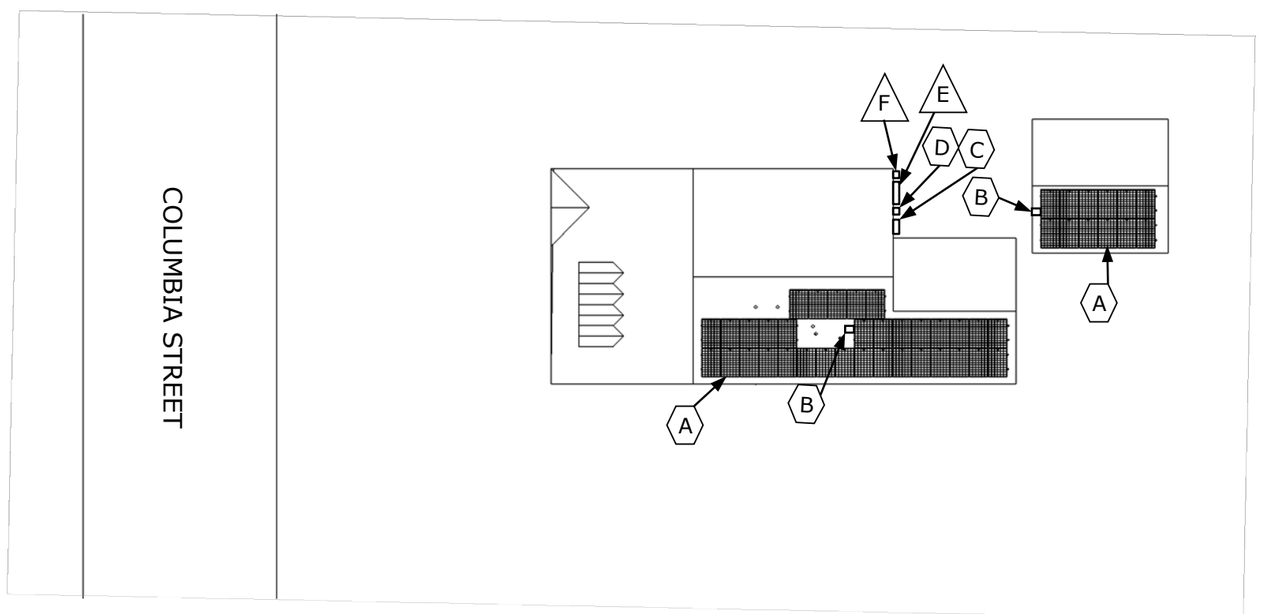


**THIS SYSTEM IS GRID TIED**

| SCHEDULE OF COMPONENTS | |
|---|---|
| A | (46) Sunedison 270W Modules & Enphase |
| | M250 Inverters |
| B | (2)Solardeck |
| C | AC Aggregate MLO Panel |
| D | Utility AC Disconnect |
| E | Main Panel (Existing) |
| F | CPE Utility Meter (Existing) |

NEW | EXISTING

TEXAS SOLAR OUTFITTERS

705 SHEPHERD DR.
HOUSTON, TEXAS 77007
713-802-0223

**SITE PLAN**

SCALE: 1"=20'

PROJECT NO.: 15030

SHEET NO.: **A.1**

REVISIONS

| MM/DD/YY | DESIGN: | CHECK: | COMMENTS: |
|---|---|---|---|
| 6/19/2015 | DG | DG | ISSUE FOR REVIEW |
| -/-/- | DG | | ISSUE FOR CONSTRUCTION |
| | | | |
| | | | |
| | | | |

# TEXAS SOLAR OUTFITTERS
# ELECTRICAL ONE LINE

1020 Columbia St, Houston, TX 77008

**INSTALLATION TO BE IN COMPLIANCE WITH NEC 2014 AND ARTICLE 690**

Timothy Coats
Master Electrician # 290268

**THIS SYSTEM IS GRID TIED**

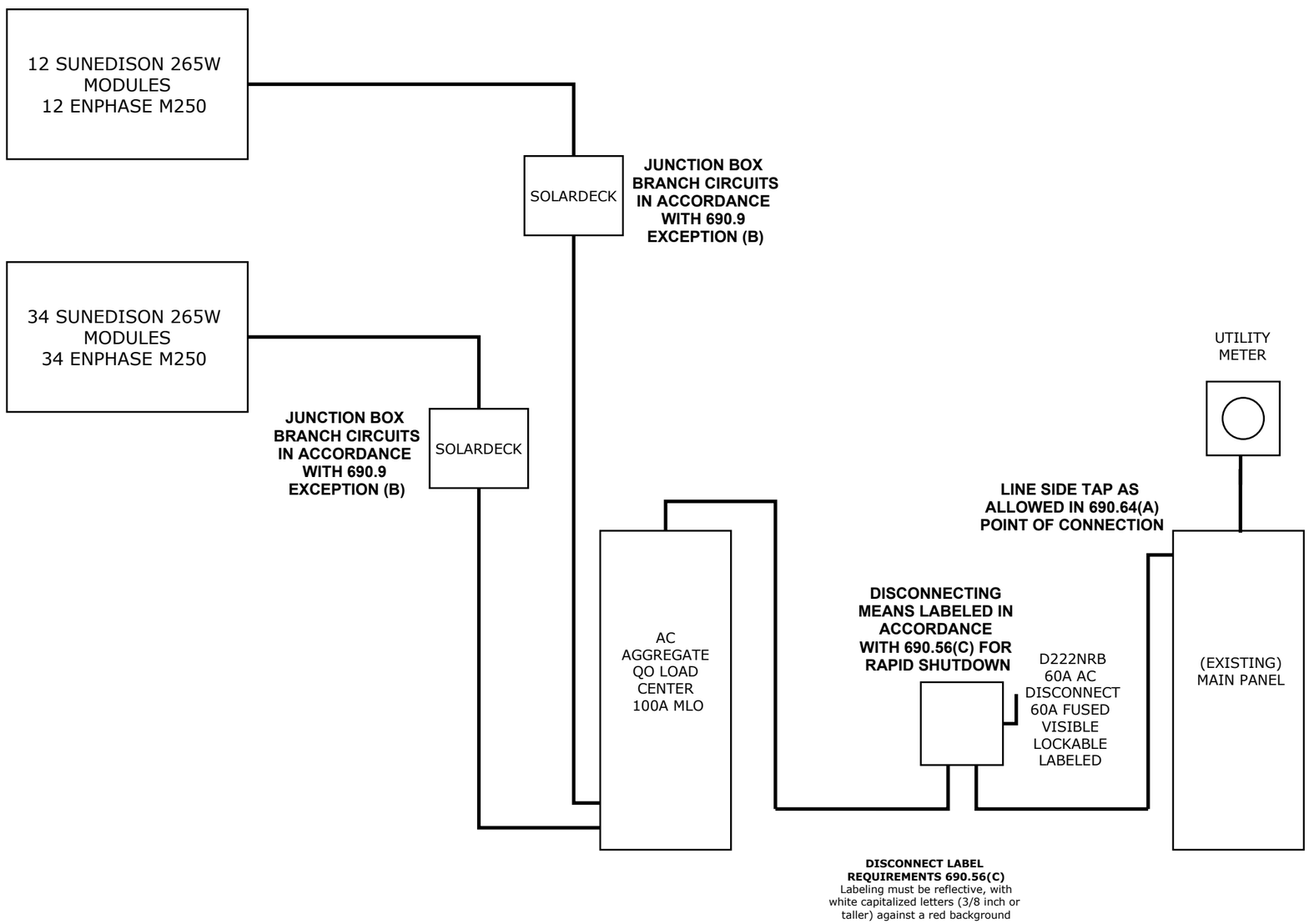


**DISCONNECT LABEL REQUIREMENTS 690.56(C)**
Labeling must be reflective, with white capitalized letters (3/8 inch or taller) against a red background

IN COMPLIANCE WITH NEC ARTICLE 100 FOR EQUIPMENT TO BE APPROVED, IDENTIFIED AND LISTED

TEXAS SOLAR OUTFITTERS
705 SHEPHERD DR.
HOUSTON, TEXAS 77007
713-802-0223

**ELECTRICAL ONE LINE**

SCALE: NTS

PROJECT NO.: 15030

SHEET NO.: **E.1**

REVISIONS

| MM/DD/YY | DESIGN: | CHECK: | COMMENTS: |
|---|---|---|---|
| 6/19/2015 | DG | | ISSUE FOR REVIEW |
| -/-/- | DG | | ISSUE FOR CONSTRUCTION |
| | | | |
| | | | |
| | | | |

# TEXAS SOLAR OUTFITTERS
# PV THREE-LINE DIAGRAM

1020 Columbia St, Houston, TX 77008

**INSTALLATION TO BE IN COMPLIANCE WITH NEC 2014 AND ARTICLE 690**

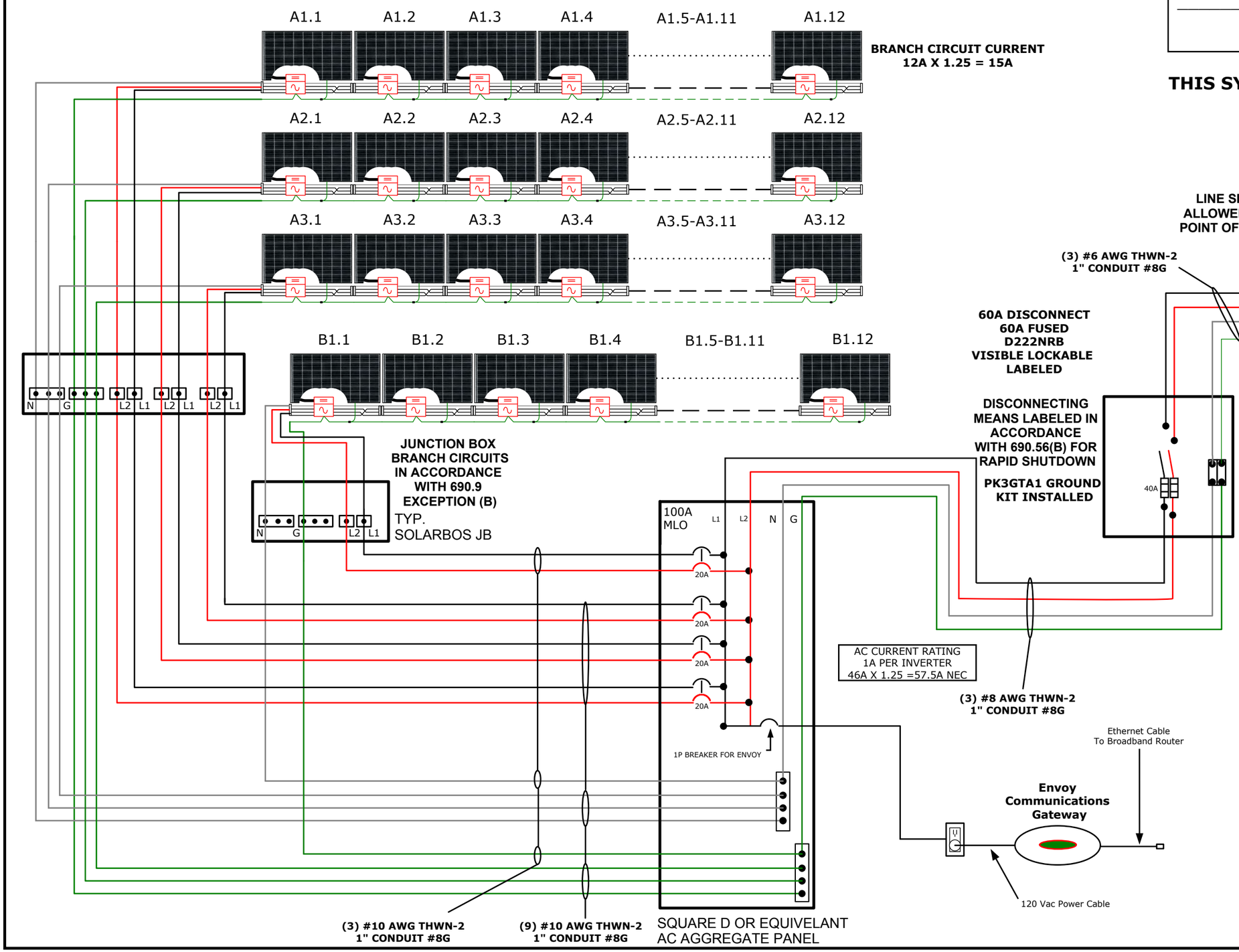


Timothy Coats
Master Electrician # 290268

## THIS SYSTEM IS GRID TIED

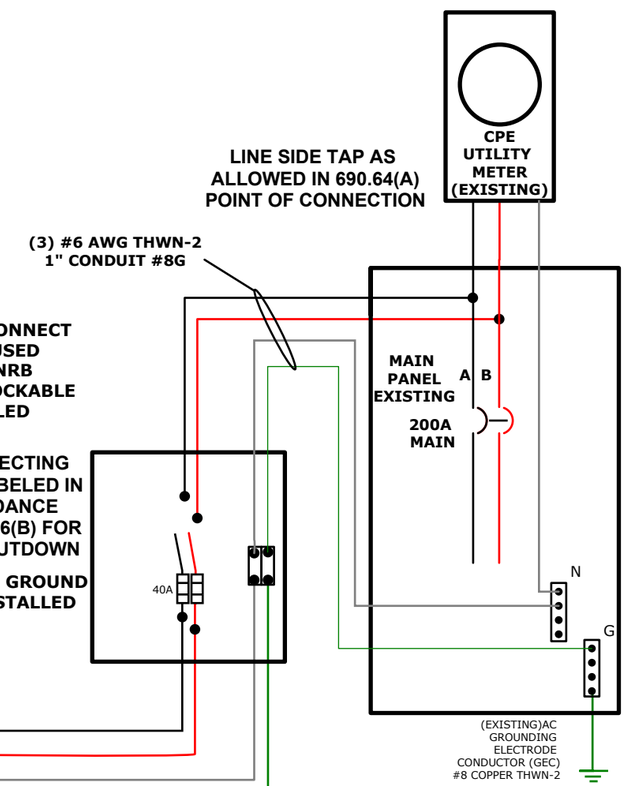


**System Information**
(25) SUNEDISON 265W Modules
Enphase M250 Inverters

**For Each Module:**

| | |
|---|---|
| Maximum PP voltage: | 31.5 V (Vmpp) |
| Maximum PP current: | 8.58 A (Impp) |
| Short Circuit Current: | 9.1 A (Isc) |
| Open Cuircuit Voltage: | 38.5 V (Voc) |
| Outer Dimensions: | 65.3" x 39" x 2" |
| Weight: | 41.8 lbs |

**Equipment Label Information**
**AC Disconnect:**

| | |
|---|---|
| Operating Voltage: | 240VAC |
| Max Current: | 57.5A AC |

**Service Panel:**
Must include notification that there are two sources of power. Interactive Photovoltaic System Do not relocate or remove.

**Utility Meter:**
Must include notification that there is a Solar PV System and the location of the AC Disconnect per NEC 705 .

**DISCONNECT LABEL REQUIREMENTS 690.56(C)**
Labeling must be reflective, with white capitalized letters (3/8 inch or taller) against a red background

**PV System AC/Utility Disconnect**

-Located within 10' and clearly visible of Utility Meter
-Accessible, Lockable, Visible Break
-Lever type Disconnect with NEMA 3R rating
-Labeled "Photovoltaic Disconnect"
-Square D model or equivalent
-In accorcance with 650.56(B) Rapid Shutdown

**NEC 2014: 690**

The applied solar not to exceed 120% of the power panel bus bar rating. Solar breaker must be located at farthest distance from main breaker and labeled:
**" Solar Breaker Do not move"**

**AC Wire Insulation Colors**

| | |
|---|---|
| Black | - AC L1 |
| Red | - AC L2 |
| White | - AC Neutral |
| Green | - Ground |

TEXAS SOLAR OUTFITTERS
705 SHEPHERD DR.
HOUSTON, TEXAS 77007
713-802-0223

## PV THREE-LINE DIAGRAM

SCALE: NTS

REVISIONS

| MM/DD/YY | DESIGN: | CHECK: | COMMENTS: |
|---|---|---|---|
| 6/19/2015 | DG | | ISSUE FOR REVIEW |
| -/-/- | DG | | ISSUE FOR CONSTRUCTION |

PROJECT NO. 15030

SHEET NO. E.2

# TEXAS SOLAR OUTFITTERS
# STRINGING LAYOUT

1020 Columbia St, Houston, TX 77008

**Notes on Module Grounding:**

1) Modules are grounded to each rail with a WEEB Clip
2) Rail Splices have a ground bridge lugged
3) Ground wire is lugged to each rail end

**Schedule of Components**

- Wiley WEEB Grounding Clip
- Mid-Clamps
- End-Clamps

Timothy Coats
Master Electrician # 290268

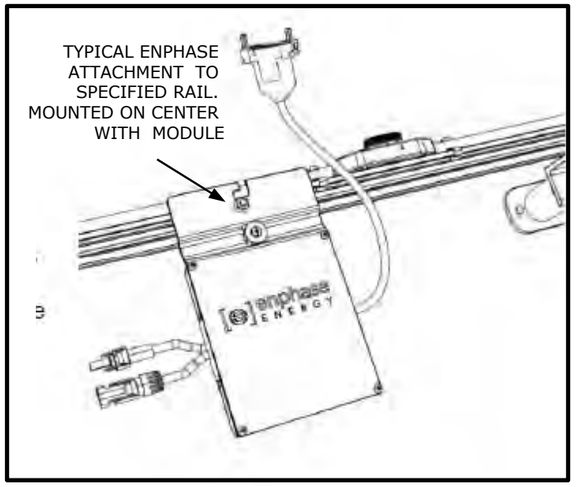


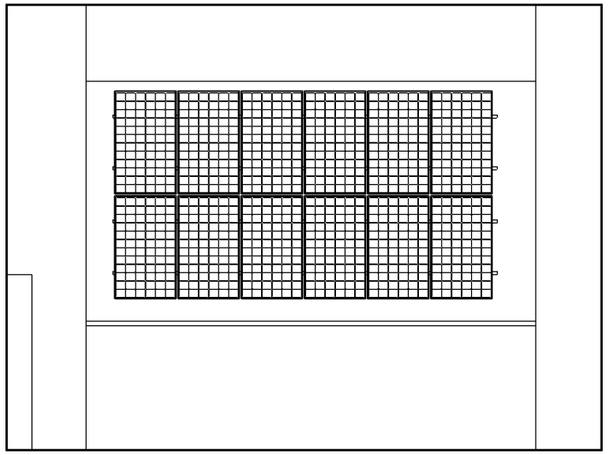

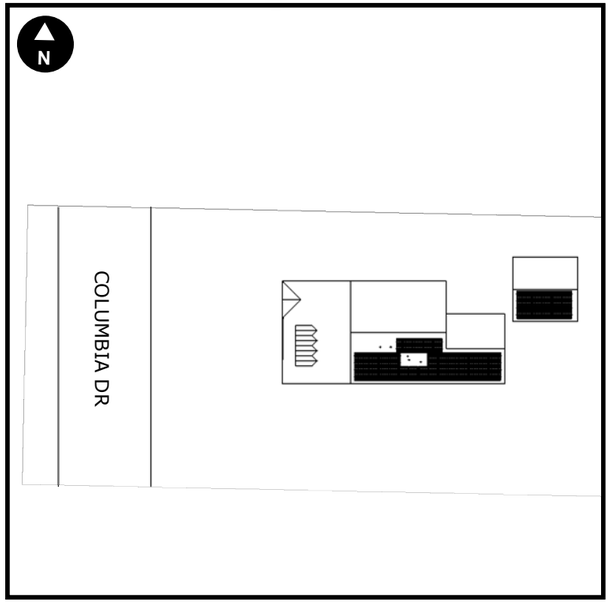


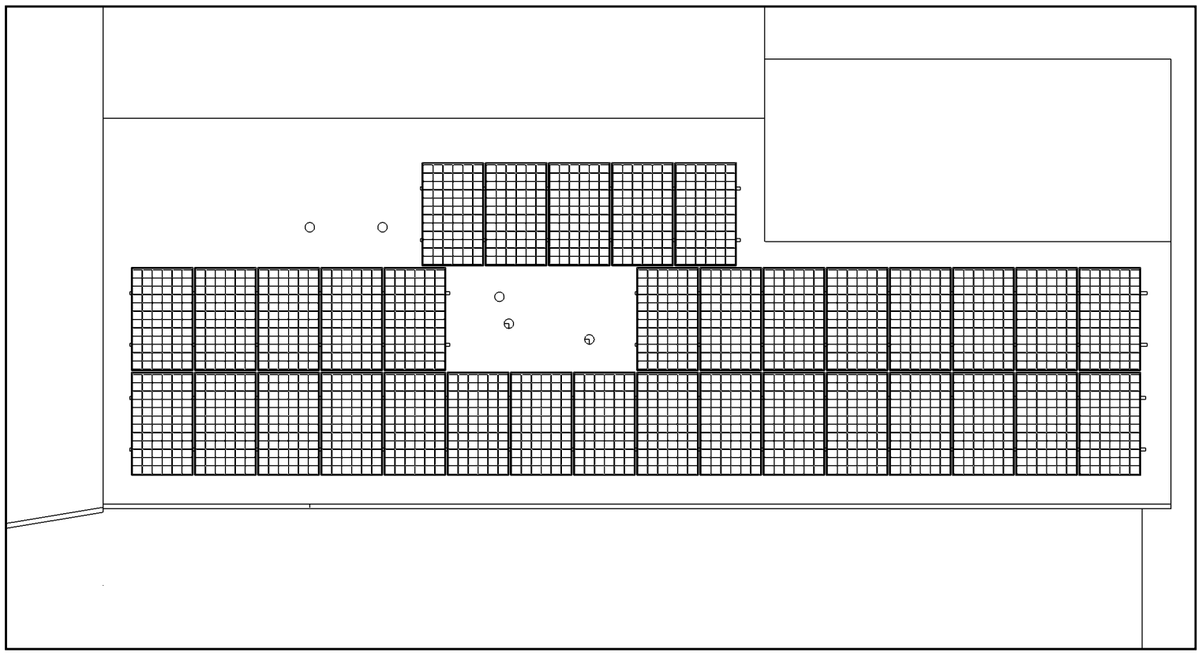

TEXAS SOLAR OUTFITTERS
705 SHEPHERD DR.
HOUSTON, TEXAS 77007
713-802-0223

## STRINGING LAYOUT

SCALE: 1/4"=1'0"

PROJECT NO.: 15030

SHEET NO.: E.3

REVISIONS

| MM/DD/YY | DESIGN: | CHECK: | COMMENTS: |
|---|---|---|---|
| 6/19/2015 | DG | | ISSUE FOR REVIEW |
| -/-/- | DG | | ISSUE FOR CONSTRUCTION |
| | | | |
| | | | |
| | | | |

# TEXAS SOLAR OUTFITTERS
# RAILS LAYOUT

1020 Columbia St, Houston, TX 77008

**Notes on Module Grounding:**

1) Modules are grounded to each rail with a Wiley WEEB Clip.
2) Rail Splices have a Wiley ground bridge lugged.
3) Ground wire is lugged to each rail.

**Schedule of Components**

- Splice
- Splice Grounding Strap
- Snap N Rack Universal Seam Clamp
- 162" STD SnapNRack Rail
- 122" STD SnapNRack Rail

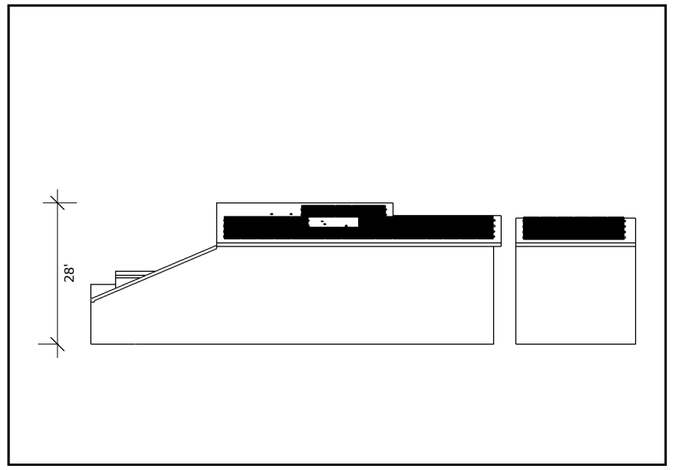


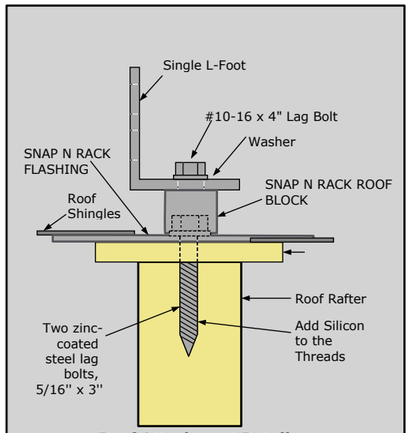


**Roof Attachment Details**
**Snap N Rack Flashing with L foot**

Non-Ballasted Solar Array On 0:12 To 6:12 Sloped Roof Supporting One Layer Of Composition Roofin gApply following span limits between rafter supports (wall, ridge/hip members, properly braced purlins)

- For unknown SYP grades and for SYP#3 @24" oc. The unbraced span limit is 7'-4"
- For unknown SYP grades and for SYP #3 @16" oc. The unbraced span limit is 9'- 2"
- For field verified grade SYP #2 @16" oc. The unbraced span limit is 12'-5"
- For field verified grade SYP #2 @24" oc. The unbraced span limit is 10'-0"

If the above rafter span is exceeded, properly braced purlins must be added in the attic.
If the roof is framed differently than the above, the engineer must provide written approval.

The engineer's stamp certifies the attachment of this solar array and it's frame to the roof structural members for all applicable added dead, live, and wind loads.

The array structural design certification does not certify or warrant any solar power output or any electrical performance, nor any other connected building, construction, or structural performance.

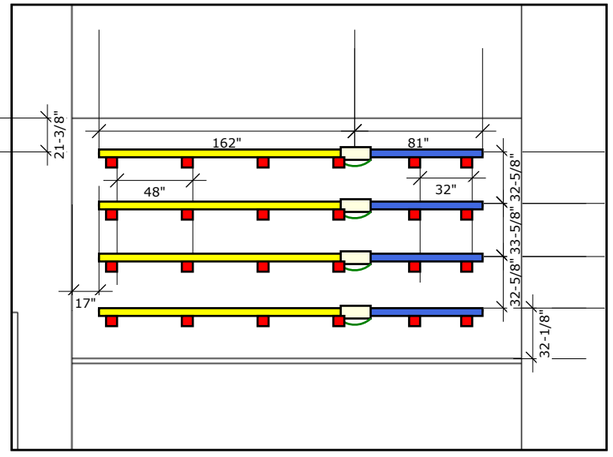


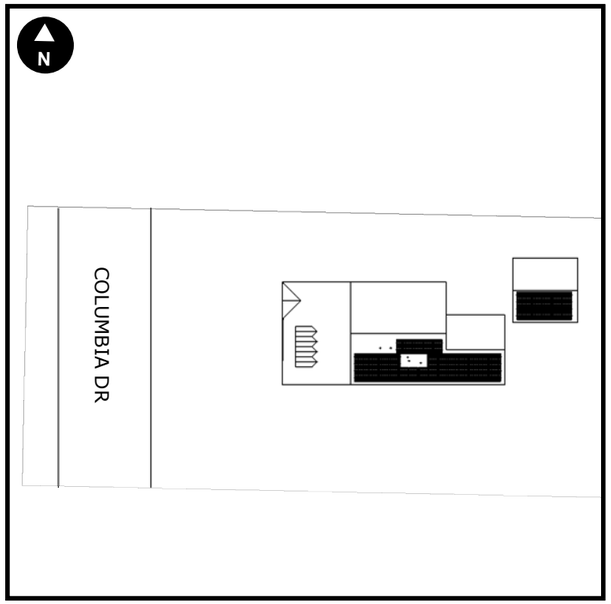


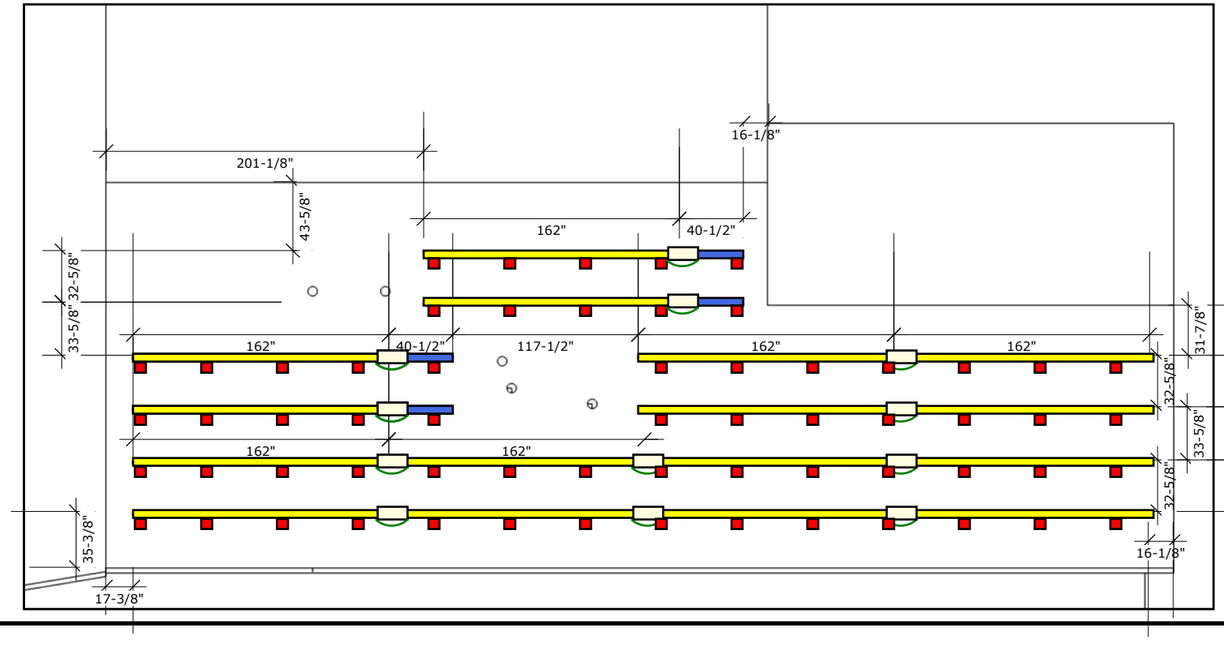


TEXAS SOLAR OUTFITTERS
705 SHEPHERD DR.
HOUSTON, TEXAS 77007
713-802-0223

## RAILS LAYOUT

| REVISIONS | MM/DD/YY | DESIGN: | CHECK: | COMMENTS: |
|---|---|---|---|---|
| | 6/19/2015 | DG | | ISSUE FOR REVIEW |
| | -/-/- | DG | | ISSUE FOR CONSTRUCTION |
| | | | | |
| | | | | |
| | | | | |

SCALE: 1/4"=1'0"

PROJECT NO.: 15030

SHEET NO.: **S.1**

TEXAS SOLAR OUTFITTERS
WIND CALCULATIONS

1020 Columbia St, Houston, TX 77008

## SOLAR PANEL INFORMATION

| | |
|---|---|
| Wind Velocity (mph) | 110 |
| Solar Panel Category | IV Hurricane |
| Importance Factor | 1.15 |
| Exposure | B |
| Height above ground (z) -(ft) | 28.0 |
| Distance to bottom edge Height -h | 20.0 |
| Mean Solar Panel Height (h) - (ft) | 24.0 |
| Solar Panel Width (ft) | 3.3 |
| Solar Panel Length (ft) | 5.4 |
| Solar Panel Slope (x:12) | 5.0 |
| Solar Panel Angle (degrees) | 22.62 |
| (a) Edge Strip (ft) | 3.00 |
| End Zone (ft) | 6.00 |

Windloadcalc.com®
Your Window to Success

# ASCE 7-05

Design: www.windloadcalc.com

Version 1
2009 ©

Solar Panel
Wind Load Program

## JOB INFORMATION

| | | |
|---|---|---|
| Job Number | 15030 | |
| Client's Name | FEINBERG | |
| | | |
| Company | Texas Solar Outfitters | |
| Address | | |
| Preparer | David | Gill |

## TOPOGRAPHIC FACTOR

| Hill Shape | Flat - No Hill |
|---|---|
| H, (ft) | 0.0 |
| Lh, (ft) | 0.0 |
| x, (ft) | 0.0 |
| z, (ft) | 0.0 |

## WIND LOAD DESIGN INFORMATION

| INFO. | APPLYING WIND LOAD FOR: | ZONE | WIDTH (feet) | LENGTH (feet) | EFFECTIVE WIND AREA (sqft) | MAXIMUM POSITIVE PRESSURE (psf) [Windward / Uplift] | MAXIMUM NEGATIVE PRESSURE (psf) [Leeward / Down Force] | MAXIMUM POSITIVE PRESSURE (lbs) [Windward / Uplift] | MAXIMUM NEGATIVE PRESSURE (lbs) [Leeward / Down Force] | MANUFACTURER | MODEL NUMBER |
|---|---|---|---|---|---|---|---|---|---|---|---|
| SOLAR PANEL INFORMATION | Gable | 1-Gable | 3.3 | 5.4 | 18 | 9.4 | -17.4 | 167 | -310 | SUNEDISON | 270W |
| | Gable | 2-Gable | 3.3 | 5.4 | 18 | 9.4 | -31.3 | 167 | -558 | SUNEDISON | 270W |
| | Gable | 3-Gable | 3.3 | 5.4 | 18 | 9.4 | -48.8 | 167 | -869 | SUNEDISON | 270W |
| | | | | | | | | | | | |
| | | | | | | | | | | | |
| | | | | | | | | | | | |
| | | | | | | | | | | | |
| | | | | | | | | | | | |
| | | | | | | | | | | | |

TEXAS SOLAR OUTFITTERS
705 SHEPHERD DR.
HOUSTON, TEXAS 77007
713-802-0223

## WIND CALCULATIONS

SCALE: NTS

REVISIONS

| MM/DD/YY | DESIGN: | CHECK: | COMMENTS: |
|---|---|---|---|
| 6/19/2015 | DG | | ISSUE FOR REVIEW |
| -/-/- | DG | | ISSUE FOR CONSTRUCTION |
| | | | |
| | | | |
| | | | |

PROJECT NO. 15030

SHEET NO. S.2

Written Description:

Property description: The property, 1020 Columbia St Houston, TX 77008, is owned by Justin and Sita Feinberg. HCAD 0202170000017.

We request approval of a Certificate of Appropriateness to allow the addition of a South-facing roof-mount solar system. The surface of the system faces away from the street and public view. We feel that the system proposed will not impact the historical integrity of the neighborhood as it will match the existing pitch of the roof.

As the contractors we would like to install 46 SunEdison 270W panels. The system size will be 12.42 kW and offset the owner's electric expenses with a generous amount of renewable energy.

The array dimensions are:

Large array: 52' x 10.88' (with a small section of this array being 16.25' x 5.44')

Small array: 19.5' x 10.88' (located on the garage behind the house)

I am submitting for your consideration proposed plans from our designer which have been approved by a structural engineer, Gary Beck of Eco-Holdings LLC, as well as a master electrician, Tim Coats (license number: 290268).

Best Regards,

Amanda Simons
Project Coordinator
705 Shepherd Dr
Houston, TX 77007
(713) 802-0223

# Enphase® **M250**

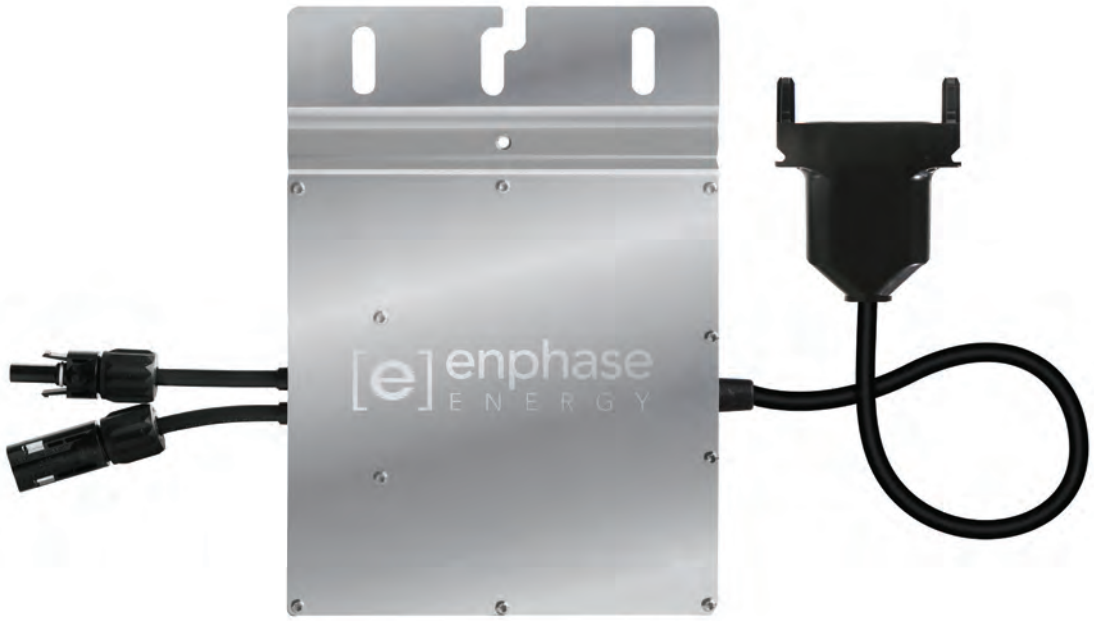


The **Enphase® M250 Microinverter** delivers increased energy harvest and reduces design and installation complexity with its all-AC approach. With the M250, the DC circuit is isolated and insulated from ground, so **no Ground Electrode Conductor (GEC) is required for the microinverter.** This further simplifies installation, enhances safety, and saves on labor and materials costs.

The Enphase M250 integrates seamlessly with the Engage® Cable, the Envoy® Communications Gateway™, and Enlighten®, Enphase's monitoring and analysis software.

## PRODUCTIVE

- Optimized for higher-power modules
- Maximizes energy production
- Minimizes impact of shading, dust, and debris

## SIMPLE

- No GEC needed for microinverter
- No DC design or string calculation required
- Easy installation with Engage Cable

## RELIABLE

- 4th-generation product
- More than 1 million hours of testing and 3 million units shipped
- Industry-leading warranty, up to 25 years

[e] enphase® ENERGY

C US

| **INPUT DATA (DC)** | **M250-60-2LL-S22/S23/S24** | |
|---|---|---|
| Recommended input power (STC) | 210 - 300 W | |
| Maximum input DC voltage | 48 V | |
| Peak power tracking voltage | 27 V - 39 V | |
| Operating range | 16 V - 48 V | |
| Min/Max start voltage | 22 V / 48 V | |
| Max DC short circuit current | 15 A | |
| Max input current | 9.8 A | |
| **OUTPUT DATA (AC)** | **@208 VAC** | **@240 VAC** |
| Peak output power | 250 W | 250 W |
| Rated (continuous) output power | 240 W | 240 W |
| Nominal output current | 1.15 A (A rms at nominal duration) | 1.0 A (A rms at nominal duration) |
| Nominal voltage/range | 208 V / 183-229 V | 240 V / 211-264 V |
| Nominal frequency/range | 60.0 / 57-61 Hz | 60.0 / 57-61 Hz |
| Extended frequency range* | 57-62.5 Hz | 57-62.5 Hz |
| Power factor | >0.95 | >0.95 |
| Maximum units per 20 A branch circuit | 24 (three phase) | 16 (single phase) |
| Maximum output fault current | 850 mA rms for 6 cycles | 850 mA rms for 6 cycles |
| **EFFICIENCY** | | |
| CEC weighted efficiency, 240 VAC | 96.5% | |
| CEC weighted efficiency, 208 VAC | 96.0% | |
| Peak inverter efficiency | 96.5% | |
| Static MPPT efficiency (weighted, reference EN50530) | 99.4 % | |
| Night time power consumption | 65 mW max | |
| **MECHANICAL DATA** | | |
| Ambient temperature range | -40°C to +65°C | |
| Operating temperature range (internal) | -40°C to +85°C | |
| Dimensions (WxHxD) | 171 mm x 173 mm x 30 mm (without mounting bracket) | |
| Weight | 2.0 kg | |
| Cooling | Natural convection - No fans | |
| Enclosure environmental rating | Outdoor - NEMA 6 | |
| **FEATURES** | | |
| Compatibility | Compatible with 60-cell PV modules. | |
| Communication | Power line | |
| Integrated ground | The DC circuit meets the requirements for ungrounded PV arrays in NEC 690.35. Equipment ground is provided in the Engage Cable. No additional GEC or ground is required. | |
| Monitoring | Free lifetime monitoring via Enlighten software | |
| Compliance | UL1741/IEEE1547, FCC Part 15 Class B, CAN/CSA-C22.2 NO. 0-M91, 0.4-04, and 107.1-01 | |

* Frequency ranges can be extended beyond nominal if required by the utility

To learn more about Enphase Microinverter technology,
visit **enphase.com**

enphase® ENERGY

© 2013 Enphase Energy. All rights reserved. All trademarks or brands in this document are registered by their respective owner.

# SILVANTIS® R-SERIES: 270 W TO 290 W

## 60-Cell High Wattage Modules

SunEdison introduces the next generation of high performance solar modules based on innovative Continuous Cz (CCz) monocrystalline cells with PERC technology. The Silvantis R-Series delivers the highest levels of efficiency and durability; providing homeowners with the same quality and performance SunEdison's utility customers enjoy, while optimizing roof fit, overall system size and installer productivity.

SunEdison is a leader in utility-scale solar systems with over two and a half-million Silvantis modules deployed in some of the world's harshest climates and most remote locations. This experience, coupled with over 50 years of expertise in silicon technology and innovation enables SunEdison to design and produce highly advanced residential solar solutions.

### SILVANTIS ADVANTAGE

- 17.7% module efficiency with positive power tolerance
- PID-free: compatible with transformerless and multi-MPPT inverters
- Higher return on investment with more watts-per-module
- Reliability tested beyond international standards
- Utility-grade manufacturing: ISO 14001, ISO 9001 and 100% EL inspection

### QUALITY & SAFETY

- Industry leading PID test conditions:
  - » 96 hours, 85 C, 85% relative humidity, −1kV
- IEC certified by TÜV SÜD:
  - » 61730 to ensure electrical safety
  - » 61215 long-term operation in a variety of climates including snow loading up to 5400 Pa and hail testing
  - » 61701 Level 1 salt mist corrosion resistant for marine regions
  - » 62716 ammonia testing for agricultural environments
- Manufactured to AQL 0.4 Level II quality and tested up to 3x beyond IEC standards
- CSA listed to UL 1703 for 1,000 V systems in the US and Canada
- MCS certified by BABT for the UK

### ROBUST & AESTHETIC DESIGN

- Black anodized corrosion resistant aluminum frame
  - » White back sheet: SE-R2xxCzC-3y
  - » Black back sheet: SE-R2xxKzC-3y
- Low glare anti-reflective coated (ARC) tempered glass

### SUNEDISON WARRANTY

- 25-year limited warranty for materials and workmanship for installations ≤ 250 kWDC
- 25-year linear power warranty at STC:
  - » Year 1: ≤ 3.5% of rated power
  - » After year 1: ≤ 0.7% rated power degradation per year

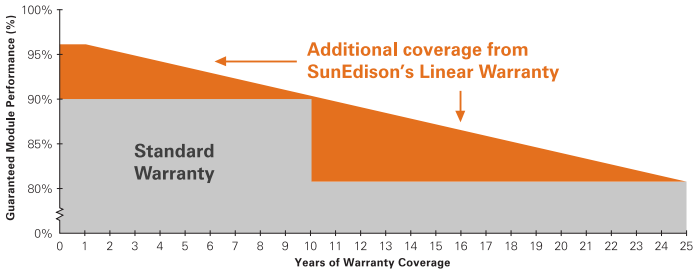


sunedison.com

# SILVANTIS R-SERIES: 270 W TO 290 W

## PHYSICAL PARAMETERS

| | |
|---|---|
| Module Dimensions | 1,658 mm x 990 mm x 50 mm |
| Module Weight | 19 kg |
| Cell Type | PERC on CCz monocrystalline |
| Number of Cells | 60 |
| Frame Material | Black Anodized Aluminum |
| Tempered ARC Glass Thickness | 3.2 mm |

## TEMPERATURE COEFFICIENTS AND PARAMETERS[1]

| | |
|---|---|
| Nominal Operating Cell Temperature (NOCT) | 45 C ± 2 C |
| Temperature Coefficient of Pmax | –0.44 %/C |
| Temperature Coefficient of Voc | –0.32 %/C |
| Temperature Coefficient of Isc | +0.05 %/C |
| Operating Temperature | –40 C to +85 C |
| Maximum System Voltage | 1000 V (UL & IEC) |
| Limiting Reverse Current | 9.20 A |
| Maximum Series Fuse Rating | 15 A |
| Pmax Production Tolerance | 0 W to +5 W |
| Junction Box Rating | IP67 |
| IEC 61730 Application | Class A |
| Module Fire Performance | Type 2 |
| Fire Resistance Rating | Class C |
| Packaging Specifications | 20 modules per pallet<br>520 modules per 40' high-cube container |
| Wind and Snow Front Load | Up to 5,400 Pa |
| Wind Back Load | 2,400 Pa |
| Reduction of STC efficiency from 1000 W/m² to 200 W/m² (Relative) | < 4% |

## STC ELECTRICAL CHARACTERISTICS[2]

| Model # (e.g. R2xxCzC-3y)[3] | R270 CzC | R275 CzC | R280 CzC | R285 CzC | R290 CzC | R270 KzC | R275 KzC | R280 KzC | R285 KzC | R290 KzC |
|---|---|---|---|---|---|---|---|---|---|---|
| Rated Maximum Power Pmax (W) | 270 | 275 | 280 | 285 | 290 | 270 | 275 | 280 | 285 | 290 |
| Open-Circuit Voltage Voc (V) | 38.5 | 39.0 | 39.2 | 39.3 | 39.3 | 38.5 | 38.6 | 38.6 | 38.7 | 38.7 |
| Short-Circuit Current Isc (A) | 9.10 | 9.30 | 9.45 | 9.50 | 9.55 | 9.10 | 9.20 | 9.30 | 9.40 | 9.50 |
| Module Efficiency (%) | 16.4 | 16.8 | 17.1 | 17.4 | 17.7 | 16.4 | 16.8 | 17.1 | 17.4 | 17.7 |
| Maximum Power Point Voltage Vmpp (V) | 31.5 | 31.6 | 31.7 | 31.9 | 31.9 | 31.5 | 31.6 | 31.6 | 31.7 | 31.7 |
| Maximum Power Point Current Impp (A) | 8.58 | 8.72 | 8.84 | 8.95 | 9.14 | 8.58 | 8.72 | 8.86 | 9.00 | 9.14 |

## NOCT ELECTRICAL CHARACTERISTICS[4]

| Model # (e.g. R2xxCzC-3y)[3] | R270 CzC | R275 CzC | R280 CzC | R285 CzC | R290 CzC | R270 KzC | R275 KzC | R280 KzC | R285 KzC | R290 KzC |
|---|---|---|---|---|---|---|---|---|---|---|
| Rated Maximum Power Pmax (W) | 197.3 | 200.9 | 204.6 | 208.2 | 211.8 | 193.2 | 196.7 | 200.3 | 203.9 | 207.5 |
| Open-Circuit Voltage Voc (V) | 35.5 | 35.6 | 35.7 | 35.8 | 35.9 | 35.3 | 35.5 | 35.6 | 35.7 | 35.8 |
| Short-Circuit Current Isc (A) | 7.42 | 7.45 | 7.47 | 7.49 | 7.51 | 7.28 | 7.32 | 7.35 | 7.38 | 7.41 |
| Maximum Power Point Voltage Vmpp (V) | 28.4 | 28.8 | 29.1 | 29.4 | 29.6 | 28.2 | 28.6 | 28.9 | 29.2 | 29.5 |
| Maximum Power Point Current Impp (A) | 6.94 | 6.97 | 7.03 | 7.09 | 7.15 | 6.84 | 6.88 | 6.93 | 6.99 | 7.05 |

Listed specifications are subject to change without prior notice.

*[1]Temperature coefficients may vary by ±10%*

*[2]All electrical data at standard test conditions (STC): 1000 W/m², AM 1.5, 25 C; electrical characteristics may vary by ±5% and power measurement tolerance by ±3%*
*Pmax Production Tolerance: factory-measured module performance is warranted to meet or exceed the stated panel STC power rating by 0 W to +5 W*

*[3]y indicates connector type: -34 = Bizlink S418; -38 = Amphenol Helios H4*
*z indicates manufacturing location: M = Malaysia, X = Mexico, P = China, T = Taiwan*

*[4]NOCT electrical characteristics measured under normal operating conditions of cells: 800 W/m², 20 C, AM 1.5, wind 1 m/s*

## R-SERIES SOLAR MODULE DIMENSIONS mm [inch]

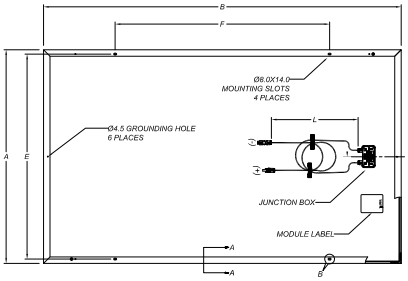


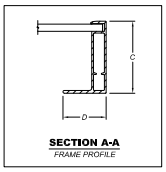


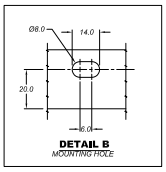


**Module Dimensions**
A – 990 [39.0] B – 1,658 [65.3]
C – 50 [2.0] D – 30 [1.18]

**Mounting Hole Spacing**
E – 950 [37.4] F – 994 [39.1]

**Cable Length**
L – 1,000 [39.4]

**Junction Box Dimensions**
101.5 x 60.0 x 25.5 [3.99 x 2.36 x 1.0]

## IV CURVES AT MULTIPLE IRRADIANCES [25 C]

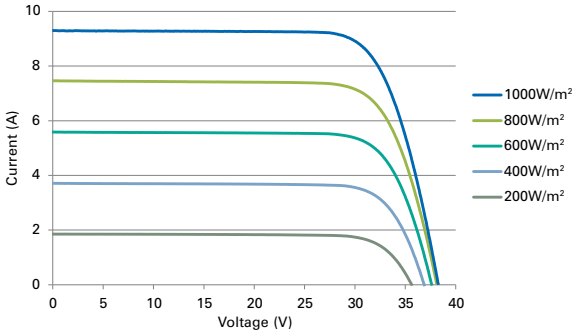


## IV CURVES AT MULTIPLE TEMPERATURES [1000 W/m²]

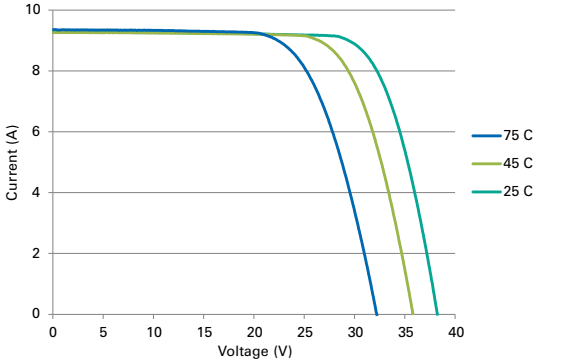


**For more information about SunEdison's Silvantis modules, please visit www.sunedison.com**

©2014 SunEdison Products Singapore Pte. Ltd.; A SunEdison Company. All rights reserved. SunEdison and the SunEdison logo are registered trademarks or trademarks of SunEdison Products Singapore Pte. Ltd. and/or its affiliates in the United States and certain other countries. All other trademarks mentioned in this document are the property of their respective owners.