CERTIFICATE OF APPROPRIATENESS
APPLICATION FORM

PLANNING & DEVELOPMENT DEPARTMENT

PROPERTY

Address 3320 BEAUCHAMP ST

Historic District / Landmark Woodland Heights HCAD # 0372690000014

Subdivision Woodland Heights Lot 15 & South ½ of Lot 14 Block 4

DESIGNATION TYPE

- ☐ Landmark
- ☐ Protected Landmark
- ☐ Archaeological Site
- ☒ Contributing
- ☐ Noncontributing
- ☐ Vacant

PROPOSED ACTION

- ☒ Alteration or Addition
- ☐ Restoration
- ☐ New Construction
- ☐ Relocation
- ☐ Demolition
- ☐ Excavation

DOCUMENTS

☒ Application checklist for each proposed action and all applicable documentation listed within are attached

OWNER

Name CARTER AND MELANIE GEHMAN

Company

Mailing Address 3320 Beauchamp St
Houston, TX 77009

Phone

Email [redacted]

Signature Carter Gehman Melanie Geh

Date 22 JUNE 2016

APPLICANT (if other than owner)

Name Alex Ridgway

Company Brickmoon Design

Mailing Address 1438 Campbell Rd, Ste. 202
Houston, TX 77055

Phone 281.501.2712

Email [redacted]

Signature

Date 7.5.16

ACKNOWLEDGEMENT OF RESPONSIBILITY

Requirements: A complete application includes all applicable information requested on checklists to provide a complete and accurate description of existing and proposed conditions. Preliminary review meeting or site visit with staff may be necessary to process the application. Owner contact information and signature is required. Late or incomplete applications will not be considered.

Deed Restrictions: You have verified that the work does not violate applicable deed restrictions.

Public Records: If attached materials are protected by copyright law, you grant the City of Houston, its officers, agencies, departments, and employees, non-exclusive rights to reproduce, distribute and publish copyrighted materials before the Houston Archaeological and Historical Commission, the Planning Commission, City Council, and other City of Houston commissions, agencies, and departments, on a City of Houston website, or other public forum for the purposes of application for a Certificate of Appropriateness or building permit, and other educational and not for profit purposes. You hereby represent that you possess the requisite permission or rights being conveyed here to the City.

Compliance: If granted, you agree to comply with all conditions of the COA. Revisions to approved work require staff review and may require a new application and HAHC approval. Failure to comply with the COA may result in project delays, fines or other penalties.

Planner: _____ *Application received:* ___/___/___ *Application complete:* ___/___/___

Rev. 01.2016

CERTIFICATE OF APPROPRIATENESS
ALTERATION / ADDITION CHECKLIST

PLANNING & DEVELOPMENT DEPARTMENT

Well in advance of the COA application deadline contact staff to discuss your project and, if necessary, to make an appointment to meet with staff for a project consultation.

Complete all applicable items and submit with the COA application form. Staff can assist you in determining what items are required for your scope of work. An incomplete application may cause delays in processing or may be deferred to the next agenda. Application materials must clearly represent current and proposed conditions. Refer to Houston Code of Ordinances, Ch. 33 VII, Sec. 33-241 for approval criteria for alteration, rehabilitation, restoration and additions.

PROPERTY ADDRESS: 3320 Beauchamp Street

BUILDING TYPE

- [x] single-family residence
- [ ] multi-family residence
- [ ] commercial building
- [ ] mixed use building
- [ ] institutional building
- [ ] garage
- [ ] carport
- [ ] accessory structure
- [ ] other

ALTERATION TYPE **Check all that apply*

- [x] addition
- [ ] foundation
- [ ] wall siding or cladding
- [x] windows or doors
- [ ] porch or balcony
- [ ] roof
- [ ] awning or canopy
- [ ] commercial sign
- [ ] ramp or lift
- [ ] other

WRITTEN DESCRIPTION

- property description, current conditions and any prior alterations or additions
- proposed work; plans to change any exterior features, and/or addition description
- current building material conditions and originality of any materials proposed to be repaired or replaced
- proposed new materials description; attach specification sheets if necessary

PHOTOGRAPHS **Label photos with description and location*

- elevations of all sides
- detail photos of exterior elements subject to proposed work
- historical photos as evidence for restoration work

DRAWINGS **Scale like drawings the same; include all dimensions and drawing scale; label with cardinal directions*

- site plan [x] existing [x] proposed
- floor plans [x] existing [x] proposed
- window and door schedule [x] existing [x] proposed
- roof plan [x] existing [x] proposed
- elevations (all sides) [x] existing [x] proposed
- 3D rendering
- demolition plan

CERTIFICATE OF APPROPRIATENESS

ALTERATION / ADDITION WORKSHEET

PLANNING & DEVELOPMENT DEPARTMENT

	EXISTING	CHANGES TO EXISTING	PROPOSED ADDITION
STORIES	one		one
SQUARE FOOTAGE			
CONDITIONED	2,020 sf	-193 sf	210 sf
UNCONDITIONED	339 sf	-248 sf	193 sf
SETBACKS*	N: 10'-4 5/8" E: 54'-1" S: 15'-3 1/8" W: 20'-5 3/4"	N: E: S: W:	N: 42'-8 7/8" E: 41'-11 7/8" S: 15'-3 1/8" W:
HEIGHTS			
Ridge	17' -5 5/8"		14'-5 5/8"
Eave	10'-11 3/8"		11'-3 5/8"
FOOTPRINT			
MAX WIDTH	49'-4 1/4"		49'-4 1/4"
MAX DEPTH	65'-11 3/4"		67'-6 3/8"
ENCROACHMENT			
FOUNDATION			
Height to FF	2'-6 1/2" above adjacent grade		2'-6 1/2" above adjacent grade
Type	Crawlspace		Crawlspace
Material	CMU block & base		CMU block & base
CLADDING			
Material	Wood siding		Hardie siding
Reveal/Brick Info	Painted brick		
PORCH			
Eave Height	10'-5 3/8"		10'-5 3/8"
Width	13'-4 1/2"		27'-8 3/4"
Depth	7'-3 3/4"		18'-4 1/4"
Material	Wood floor		Wood floor
Column Style	Painted brick, square		Painted brick, square
Column Dimensions	1'-5"x1'-5"		1'-5" x 1'-5"
ROOF			
Style	Gables, hip, & shed		Hip roof
Pitch	5:12, 2:12 shed		4:12
Material	Asphalt shingle roofing		Asphalt shingle roofing
Eave Design	Exposed rafter tails		Exposed rafter tails
Eave Overhang	Varies 1'-3" to 2'-0"		1'-0"
WINDOWS			
	-- SEE WINDOW WORKSHEET --		

IMPORTANT NOTES:

* Setbacks measured from property line to nearest point of structure

- All required information on worksheet must be indicated on drawings
- All drawings must be fully dimensioned
- All elevations must be fully dimensioned from existing natural grade where grade is 0'-00"
- Specify the height of the existing natural grade relative to a fixed point in the right of way (i.e.: crown of the street or manhole cover)

Failure to include requested information may result in an incomplete application and a delay in the approval of the proposed project

Notes:

JELD-WEN WINDOWS & DOORS

SITELINE WOOD DOUBLE-HUNG WINDOW

Like 1 Share + PRINT

Price Range: $$

Options

Model
Exterior

Grille Designs
No Grille

Color Options
Brilliant White

Product Overview | Design Options | Glass Options | Build & Installation | Tech Documents

Built from AuraLast® Wood (Pine) - The Wood That Does Not Rot. Other species include Alder and Douglas Fir. Other options include 22 clad colors, grilles, and ENERGY STAR®.

FEATURES

- **Custom Capabilities**: size, shape, glass, grille design
- **Exterior Clad Color Options**: 9 standard colors, 13 optional colors and 7 anodized clad exterior colors
- **Exterior Wood Options**: Natural or Primed AuraLast Pine
- **Interior Wood Species**: natural or primed AuraLast pine, douglas fir, alder
- **Interior Finishes**: 9 standard wood interior finishes
- **Trim Options**: exterior clad and wood trim profiles, interior wood trim profiles
- **Glass Options**: Low-E 366 and Neat standard with energy efficient, protective, textured, tinted options available
- **Hardware Options**: 9 window hardware finishes options - as well as optional factory installed Window Opening Control Device (WOCD)
- **Maintenance Level**: moderate
- **Project Type**: new construction and replacement
- **ENERGY STAR® Certified Options**: yes
- **Sustainable Solutions**: AuraLast® Wood (pine) is standard. Two wood-source certification options are available on AuraLast® Wood: Sustainable Forestry Initiative® (SFI) or Forest Stewardship Council™ (FSC®).

HAVE A QUESTION?

Our customer service team is happy to assist you

CONTACT US

- **Warranty**: 20 year general warranty & lifetime limited warranty against rot and termites

SIZING

Elevations - Siteline - Clad Awning - Standard Sizing

Elevations - Siteline - Clad Casement - Standard Sizing

Elevations - Siteline - Clad DH - Standard Sizing

Elevations - Siteline - Clad Direct Set - Standard Sizing

Elevations - Siteline - Clad InSwing Patio Door - ADM

Elevations - Siteline - Clad OutSwing Patio Door - Standard Sizing

Elevations - Siteline - Clad Sliding Patio Door - Standard Sizing

Elevations - Siteline - Wood Awning - Standard Sizing

Elevations - Siteline - Wood Casement - Standard Sizing

Elevations - Siteline - Wood Double Hung - Standard Sizing

Elevations - Siteline - Wood InSwing Patio Door - Standard Sizing

Elevations - Siteline - Wood OutSwing Patio Door - Standard Sizing

Elevations - Siteline - Wood Sliding Patio Door - Standard Sizing

Elevations / Sections - Siteline - Clad Awning - ADM

Elevations / Sections - Siteline - Clad Casement - ADM

Elevations / Sections - Siteline - Clad Direct Set - ADM

Elevations / Sections - Siteline - Clad Direct Set - Standard Sizing

Elevations / Sections - Siteline - Clad Double Hung - ADM

Elevations / Sections - Siteline - Wood Awning - ADM

Elevations / Sections - Siteline - Wood Casement - ADM

Elevations / Sections - Siteline - Wood Double Hung - ADM

More Technical Documents

BACK TO TOP

TABLE OF CONTENTS

General Information 6-2
Elevation Notes 6-3
Clear Opening. 6-6
Light Cut Information 6-7
Operation and Sash Tilt. 6-8
Unit Sizing, Rough Openings & Masonry Openings 6-9
Trim Options 6-10
Sill Options 6-11
Glass Stop Options 6-12
Jamb Extender Options. 6-13
Mullion Options 6-14
Bay Rough Openings 6-17
Glazing Options 6-18
SDL Options 6-20
Section Details 6-22
Min-Max Sizing 6-28

JELD-WEN reserves the right to change specifications without notice.

GENERAL INFORMATION

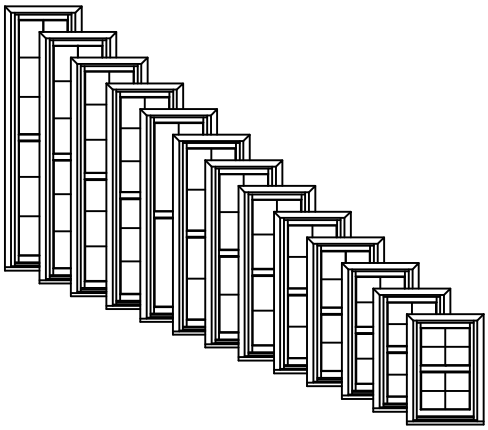

DIMENSIONAL WINDOWS

Wood double hung windows may be specified as "dimensional", by adjusting the desired rough opening width or height.

Wood double hung windows feature fully operating upper and lower sash. Counterbalancing is achieved with block and tackle spring extension systems hidden in weatherable PVC jambliners. Operating units are supplied with cam-type sash locks installed. Die-cast lower sash lifts supplied for field installation are an option. Recessed sash retainers provide simple sash installation and removal. There are several hardware finish options. Refer to the Specifications for available finish options.

MULTIPLE ASSEMBLIES

Wood double hung windows may be mulled beside other wood double hungs or wood picture windows, or below wood transom windows, to fulfill a wide variety of needs.

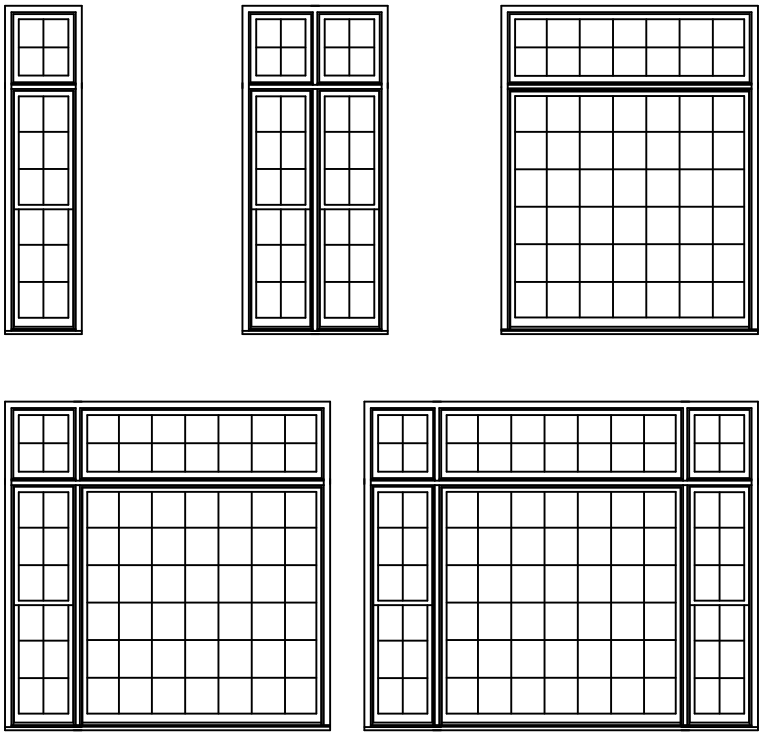

JELD-WEN reserves the right to change specifications without notice.

SCALE: NTS

DOUBLE HUNG ELEVATION NOTES

ELEVATION DRAWINGS UTILIZE A LIMITED NUMBER OF PROJECTED LINES TO PRODUCE A RUDIMENTARY DRAWING INTENDED TO BE USED IN A SMALL GRAPHICAL SCALE. ELEVATIONS ARE VIEWED PERPENDICULAR FROM THE EXTERIOR OF THE STRUCTURE. IF MORE DIMENSIONS ARE NEEDED, USE THE SECTION DRAWINGS FOR MORE COMPLETE DEPICTIONS.

DOUBLE HUNG WINDOW

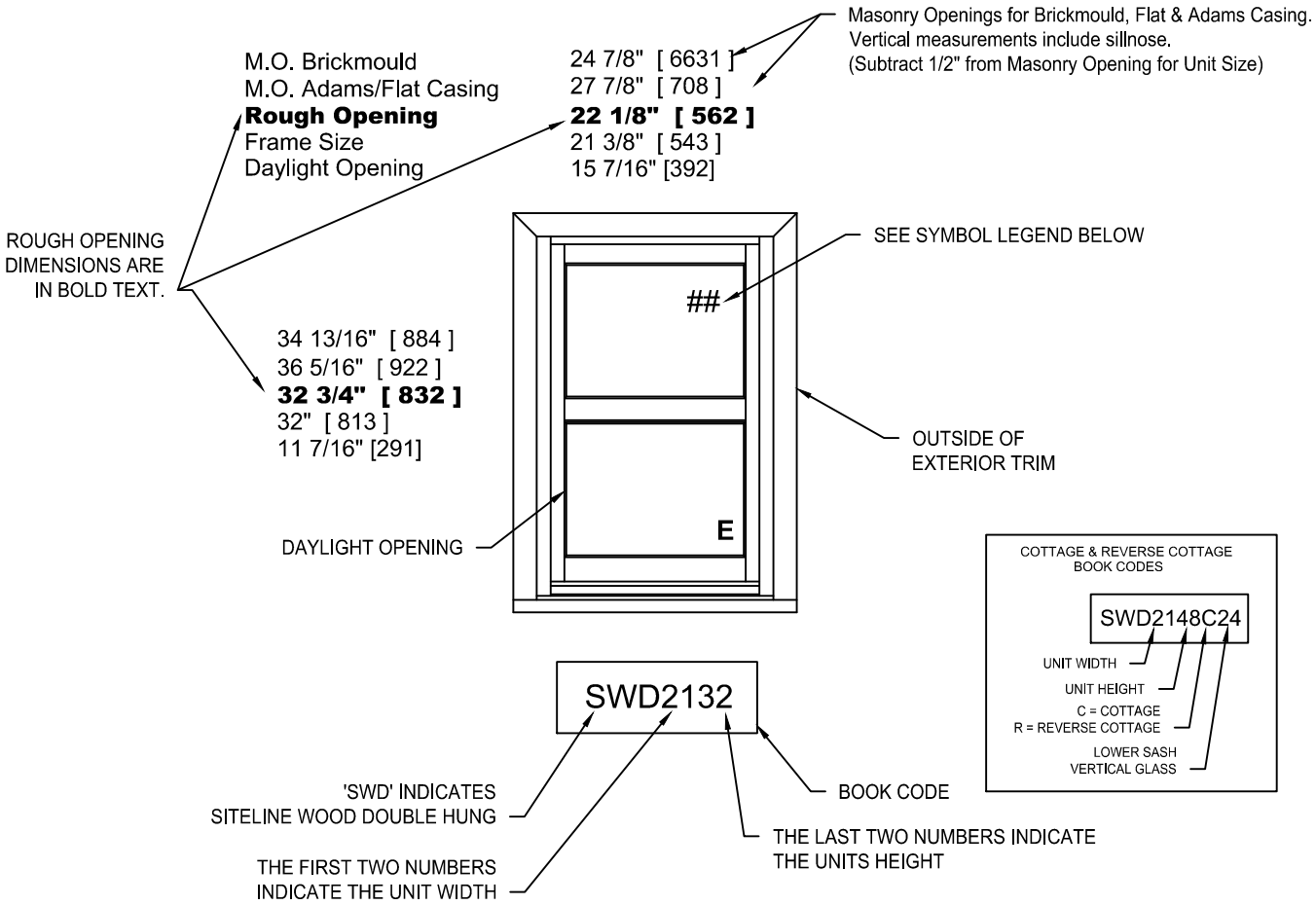

GENERAL WOOD DOUBLE HUNG NOTES

1. ALL UNITS SHOWN ARE AVAILABLE AS OPERATORS ONLY.
2. UNIT ELEVATIONS ARE SHOWN WITH BRICKMOULD & SILLNOSE.
3. ALL OPERATING SASH ARE INSTALLED WITH VINYL JAMB LINERS AND OPERATED WITH AN INTERNAL BLOCK AND TACKLE SPRING SYSTEM.
4. DIMENSIONAL VALUES IN BRACKETS ARE MILLIMETER CONVERSIONS.

ELEVATION SYMBOL LEGEND:

E BASIC UNIT CLEAR OPENING EXCEEDS 20" IN WIDTH, 24" IN HEIGHT & A MINIMUM OF 5.7 SQ. FT.

E1 BASIC UNIT CLEAR OPENINGS EXCEEDS 20" IN WIDTH, 24" IN HEIGHT & A MINIMUM OF 5.0 SQ. FT., FOR FIRST FLOOR EGRESS

NUMBER INDICATES PERFORMANCE GRADE(PG) RATING WITH STANDARD GLAZING.

SCALE: NTS

JELD-WEN reserves the right to change specifications without notice.

PICTURE
ELEVATION NOTES

ELEVATION DRAWINGS UTILIZE A LIMITED NUMBER OF PROJECTED LINES TO PRODUCE A RUDIMENTARY DRAWING INTENDED TO BE USED IN A SMALL GRAPHICAL SCALE. ELEVATIONS ARE VIEWED PERPENDICULAR FROM THE EXTERIOR OF THE STRUCTURE. IF MORE DIMENSIONS ARE NEEDED, USE THE SECTION DRAWINGS FOR MORE COMPLETE DEPICTIONS.

PICTURE WINDOW

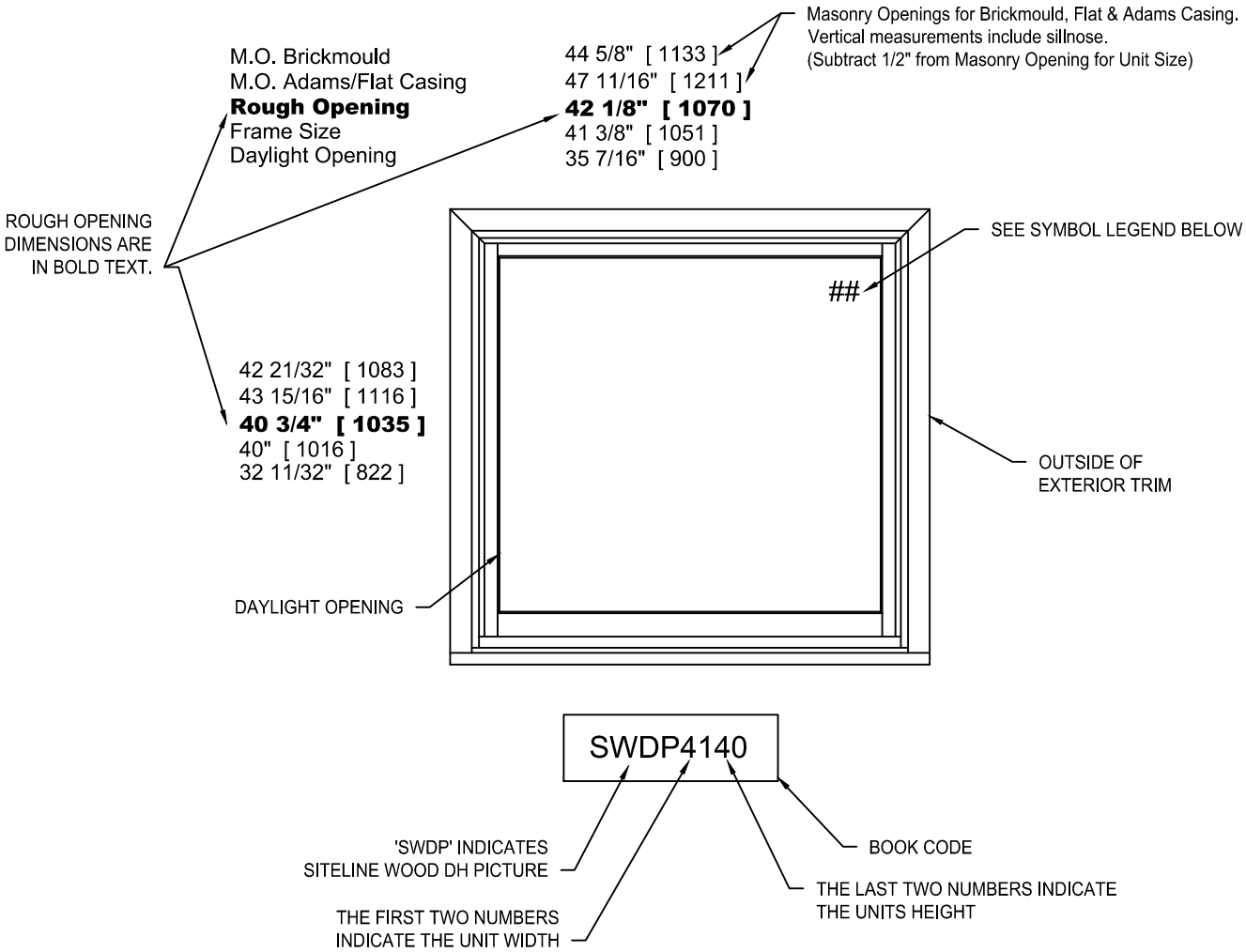

GENERAL DOUBLE HUNG PICTURE NOTES

1. ALL UNITS SHOWN ARE AVAILABLE AS STATIONARY ONLY.
2. UNIT ELEVATIONS ARE SHOWN WITH BRICKMOULD AND SILLNOSE.
3. DIMENSIONAL VALUES IN BRACKETS ARE MILLIMETER CONVERSIONS.

ELEVATION SYMBOL LEGEND:

NUMBER INDICATES PERFORMANCE GRADE(PG) RATING WITH STANDARD GLAZING.

JELD-WEN reserves the right to change specifications without notice.

SCALE: NTS

TRANSOM
ELEVATION NOTES

ELEVATION DRAWINGS UTILIZE A LIMITED NUMBER OF PROJECTED LINES TO PRODUCE A RUDIMENTARY DRAWING INTENDED TO BE USED IN A SMALL GRAPHICAL SCALE. ELEVATIONS ARE VIEWED PERPENDICULAR FROM THE EXTERIOR OF THE STRUCTURE. IF MORE DIMENSIONS ARE NEEDED, USE THE SECTION DRAWINGS FOR MORE COMPLETE DEPICTIONS.

TRANSOM WINDOW

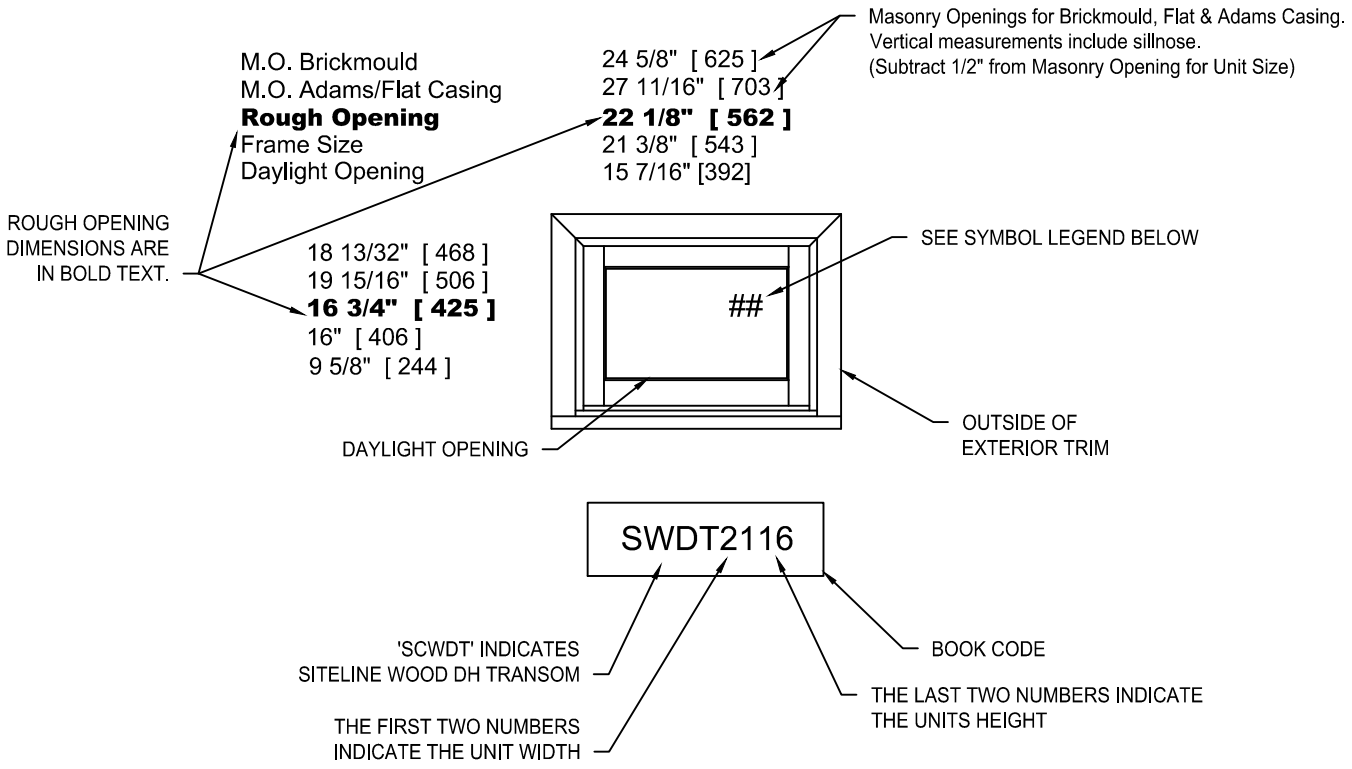

GENERAL DOUBLE HUNG TRANSOM NOTES

1. ALL UNITS SHOWN ARE AVAILABLE AS STATIONARY ONLY.

2. UNIT ELEVATIONS ARE SHOWN WITH BRICKMOULD & SILLNOSE.

2. DIMENSIONAL VALUES IN BRACKETS ARE MILLIMETER CONVERSIONS.

ELEVATION SYMBOL LEGEND:

NUMBER INDICATES PERFORMANCE GRADE(PG) RATING WITH STANDARD GLAZING.

JELD-WEN reserves the right to change specifications without notice.

SCALE: NTS

CLEAR OPENING

CLEAR OPENING LAYOUT

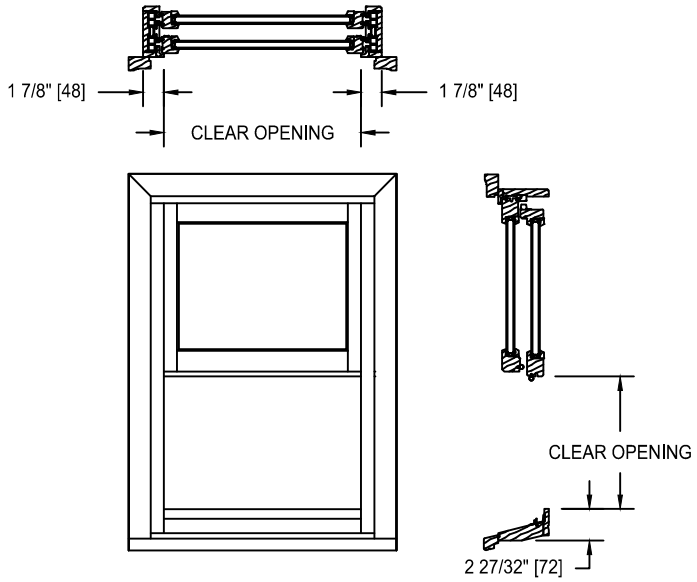

DOUBLE HUNG WINDOW

DOUBLE HUNG
CLEAR OPENING FORMULA

INTERIOR GLAZED SASH
VERTICAL

(Frame Height /2) - 2 27/32" = Clear Opening

HORIZONTAL

Frame - 3 3/4" = Clear Opening

EXTERIOR GLAZED SASH
VERTICAL

(Frame Height /2) - 2 27/32" = Clear Opening

HORIZONTAL

Frame - 3 3/4" = Clear Opening

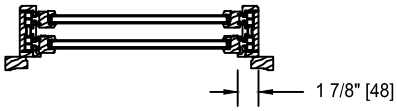

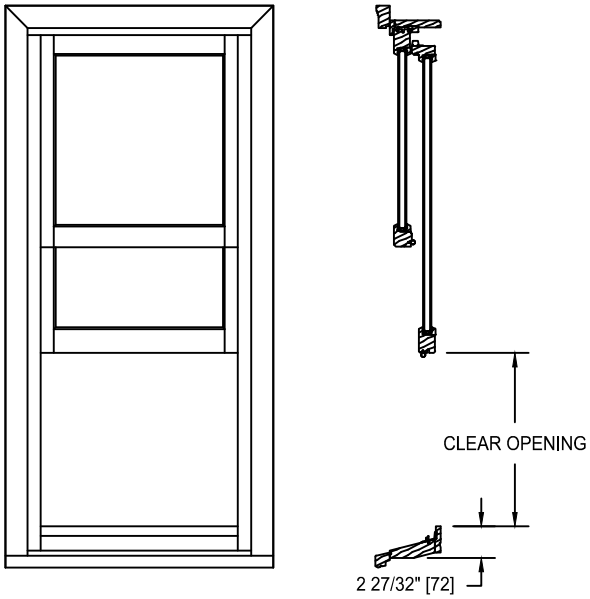

COTTAGE WINDOW

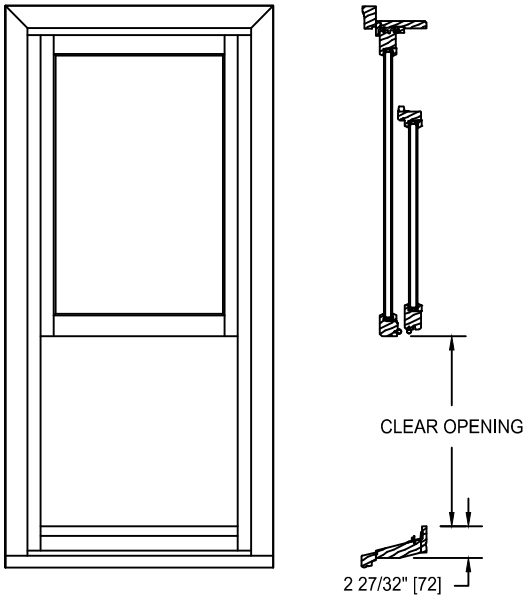

REVERSE COTTAGE WINDOW

COTTAGE & REVERSE COTTAGE
Consult the Design Data Tables for clear opening information. For dimensional units, contact Jeld-Wen - Hawkins Window Division Technical Services Department for Clear Opening information.

JELD-WEN reserves the right to change specifications without notice.

SCALE:NTS

LITE CUT OPTIONS

Wood double hung windows are available with removable grilles in 7/8", 1-1/8" and 1-3/8" widths, grilles between glass (GBG), and Simulated Divided Lites. Standard lite cuts are rectangular, and conform to the layouts noted in the charts on the next page. To use the chart, refer to the appropriate table by the type of window and type of bars or grilles the section drawings illustrate. Then simply cross reference the frame Height and Width to determine the standard lite cut.

LITE CUT OPTIONS

Special lite cut patterns can include a wide variety of straight line and radius patterns. The illustrations shown here represent just a few of the possibilities. Rectangular, horizontal, vertical and Prairie lite patterns are available in all standard size wood double hung windows. Uneven, diamond, radius and Gothic lite cuts are available, subject to approval. Approvals are based on the ability to fulfill the design requirement while maintaining the construction integrity of the finished product.

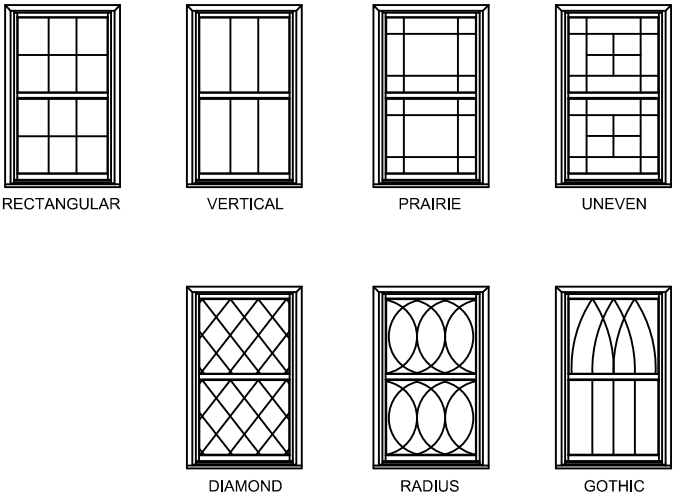

BAR ALIGNMENT

Alignment of divided lite muntin bars from one window to the next is often required by fine architectural design. Wood grilles, GBG's, and Simulated Divided Lites may be specified with muntin bars aligned.

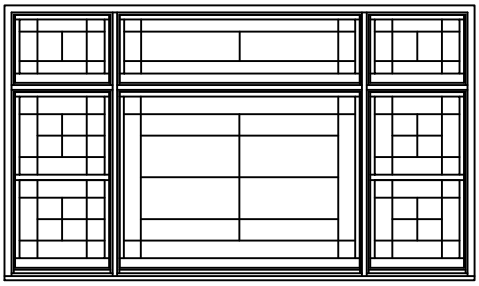

JELD-WEN reserves the right to change specifications without notice.

OPERATION AND SASH TILT

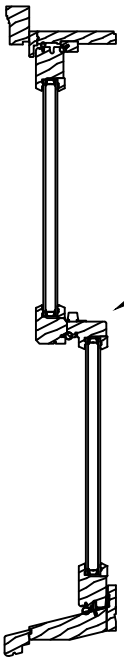

DOUBLE HUNG OPERATION:
When the sash are locked at the check rails the sash are closed and sealed in the sash opening of the frame.

When the sash are unlocked the lower sash travels vertically to any position desired. The upper sash can also be positioned as desired.

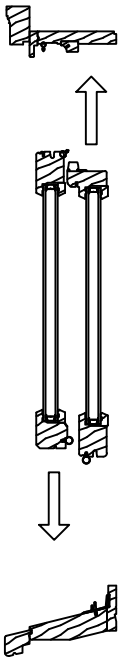

SASH TILTING FOR WASHING
The Premium Double Hung window will allow the sash to be tilted or removed for easy cleaning.

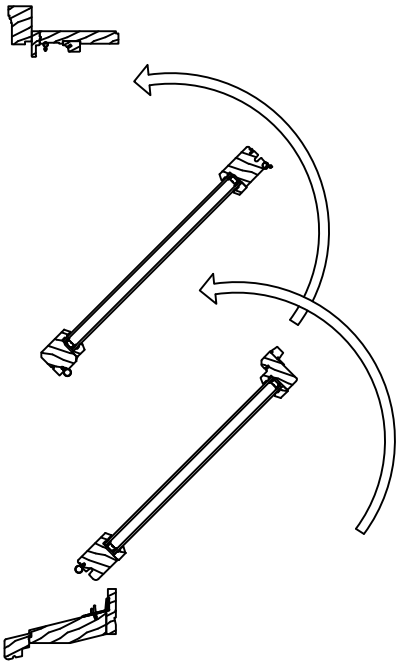

JELD-WEN reserves the right to change specifications without notice.

SCALE:NTS

UNIT SIZING

STANDARD OFFERING
BRICKMOULD & SILLNOSE

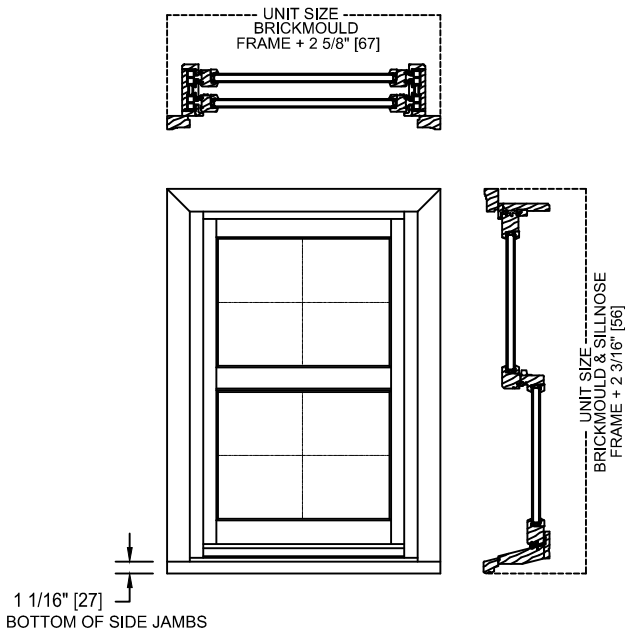

GENERAL NOTES:

UNIT SIZE IS ALWAYS THE EXTREME SIZE OF THE WINDOW WITH OR WITHOUT TRIM AND DOES NOT INCLUDE NAIL FIN

MASONRY OPENING:

MASONRY OPENING IS ALWAYS 1/2" OVER (HEIGHT AND WIDTH) THE UNIT SIZE OR THE OUTSIDE EDGE OF THE TRIM OF THE WINDOW

ROUGH OPENING:
ROUGH OPENING IS ALWAYS 3/4" OVER FRAME SIZE OF THE WINDOW

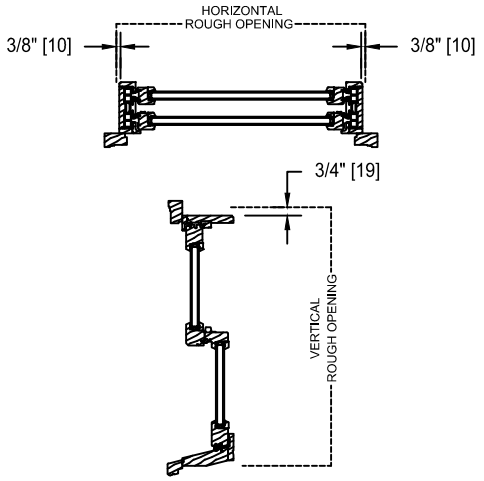

NON-STANDARD UNIT SIZING

EXTERIOR TRIM OFFERINGS WITH SILL NOSE

EXTERIOR TRIM MUST USE SILL NOSE

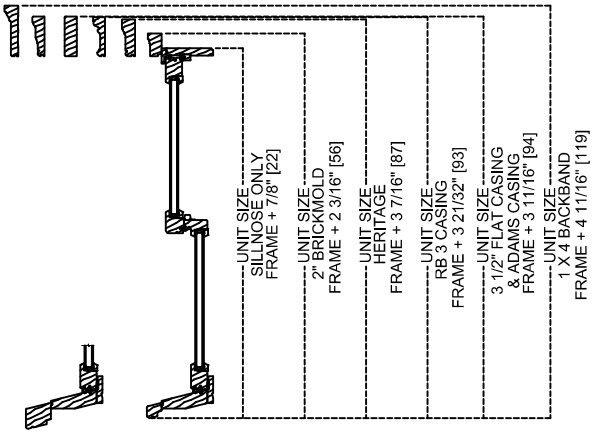

2" SILL NOSING WOULD ADD AN ADDITIONAL 15/16" TO STANDARD UNIT HEIGHT

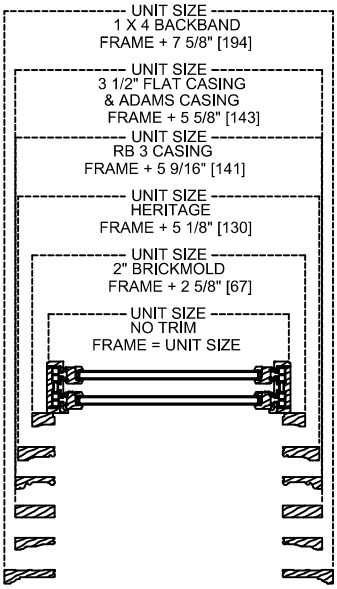

JELD-WEN reserves the right to change specifications without notice.

SCALE:NTS

TRIM OPTIONS

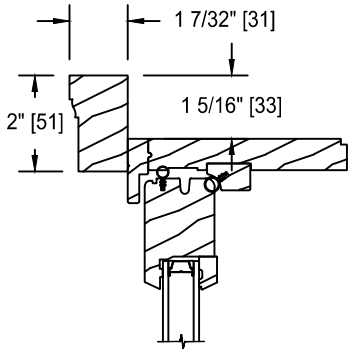

BRICKMOLD

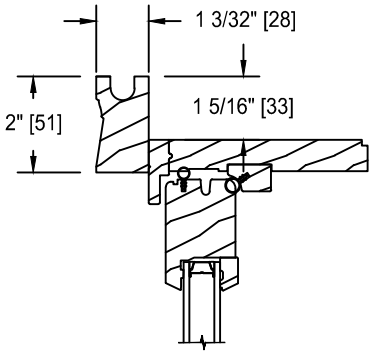

STUCCO BRICKMOULD

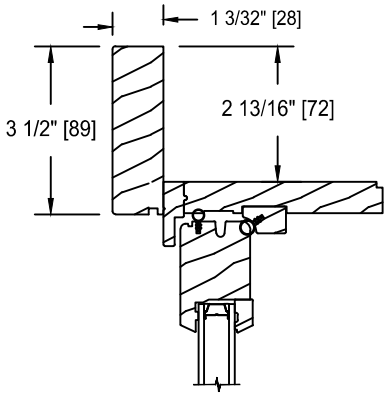

FLAT CASING

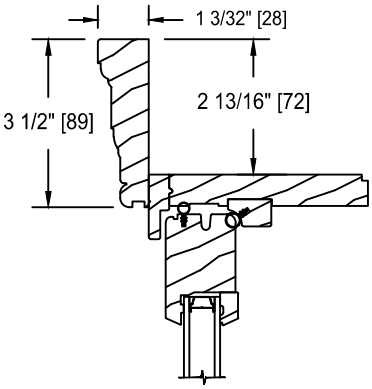

ADAMS CASING

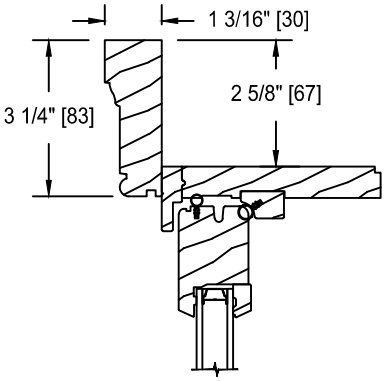

HERITAGE

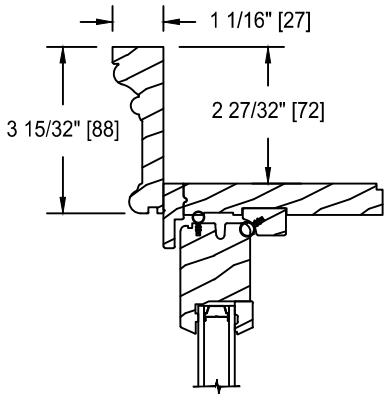

RB 3 CASING

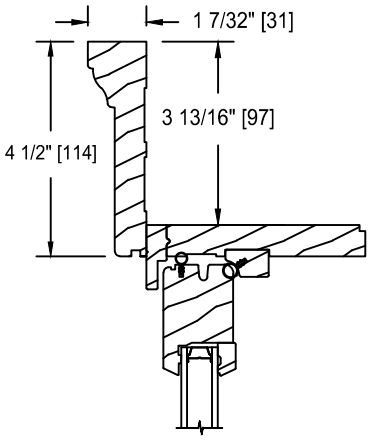

1 X 4 BACKBAND

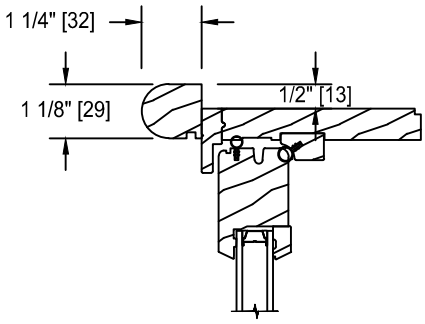

BULLNOSE CASING

SCALE: 3" = 1'-0"

JELD-WEN reserves the right to change specifications without notice.

SILL OPTIONS

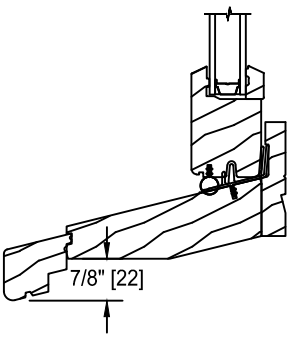

STANDARD SILL NOSING

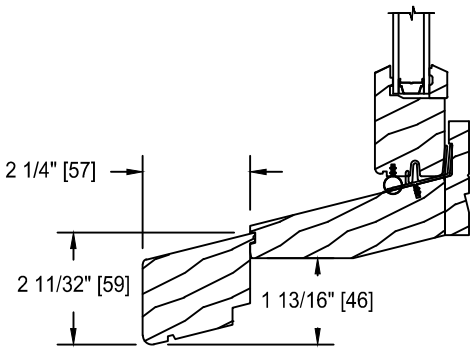

2" SILL NOSING

JELD-WEN reserves the right to change specifications without notice.

SCALE: 3" = 1'-0"

GLASS STOP OPTIONS

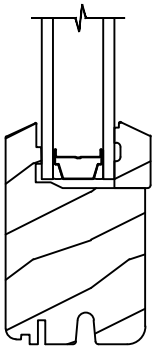

TRADITIONAL

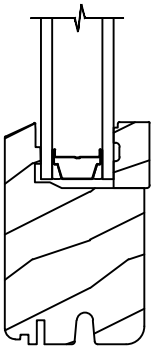

CONTEMPORARY

SCALE: 6" = 1' - 0"

JELD-WEN reserves the right to change specifications without notice.

JAMB EXTENDER OPTIONS

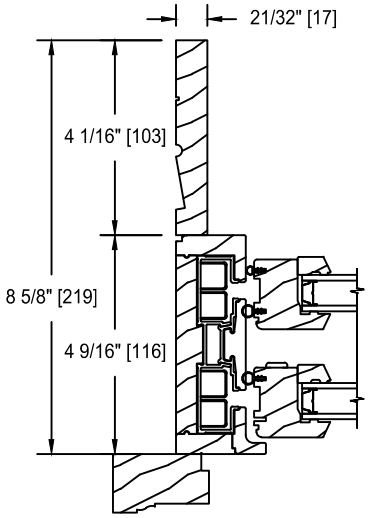

8 5/8" WALL

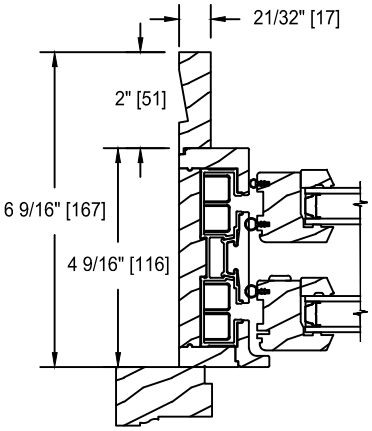

6 9/16" WALL
4/4 JAMB THICKNESS
(STANDARD)

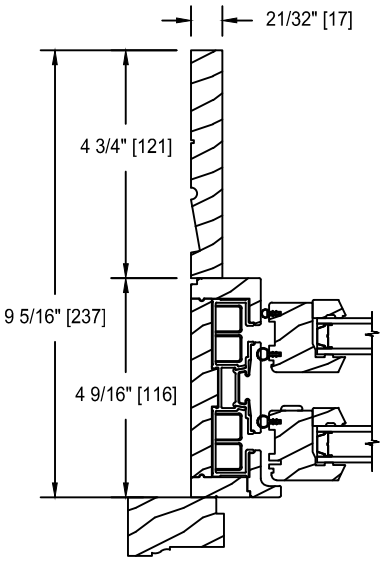

9 5/16" WALL

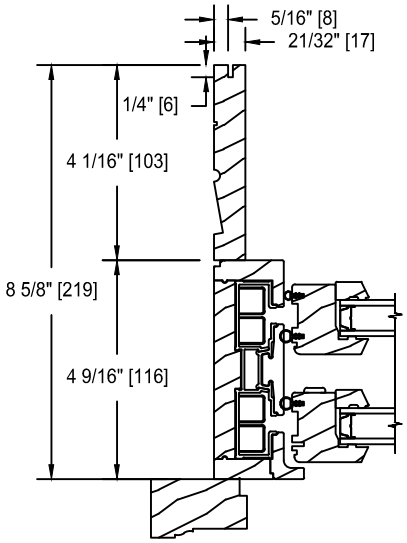

8 5/8" WALL
KERFED EXTENSION SHOWN

JELD-WEN reserves the right to change specifications without notice.

SCALE: 3" = 1'-0"

MULLION OPTIONS

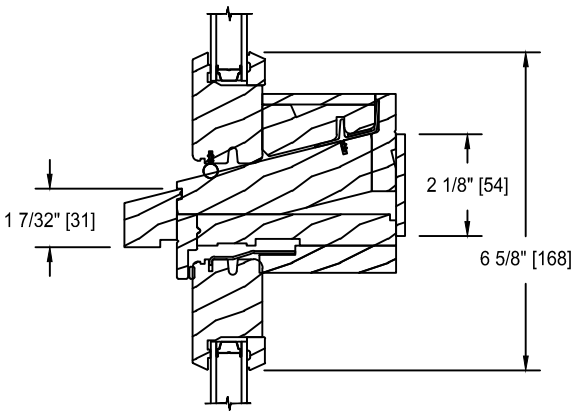

STATIONARY / OPERATING

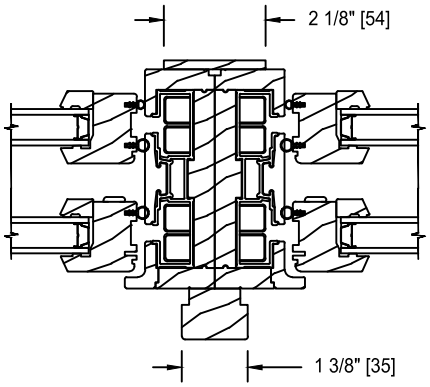

OPERATING / OPERATING

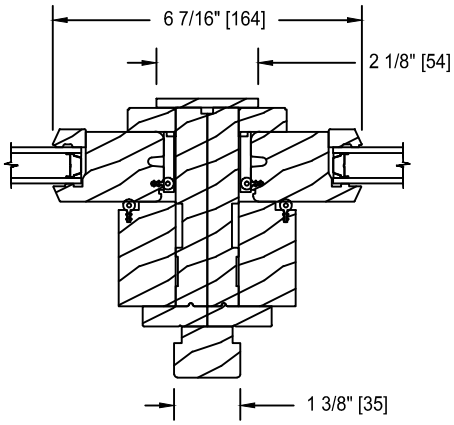

STATIONARY / STATIONARY

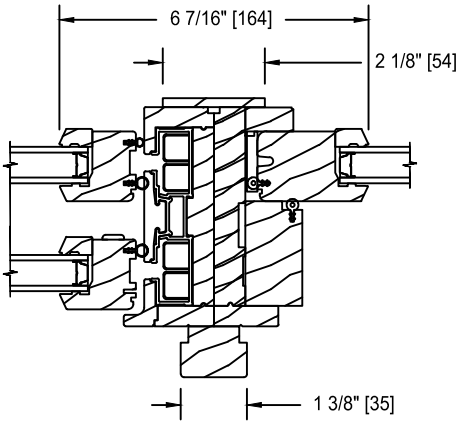

OPERATING / STATIONARY

JELD-WEN reserves the right to change specifications without notice.

SCALE: 3" = 1'-0"

SPREAD MULLION OPTIONS

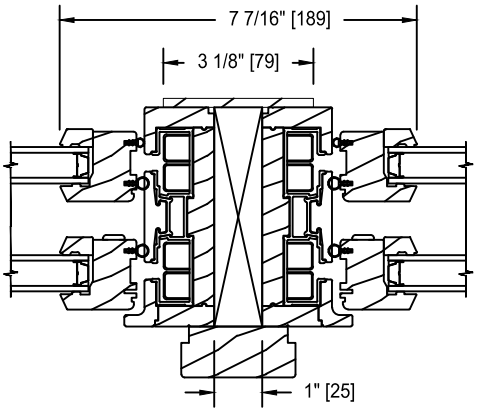

OPERATING / OPERATING
WITH 1" SOLID SPREAD MULL

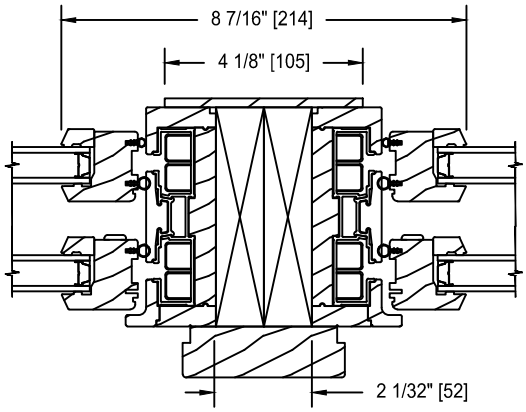

OPERATING / OPERATING
WITH 2" SOLID SPREAD MULL

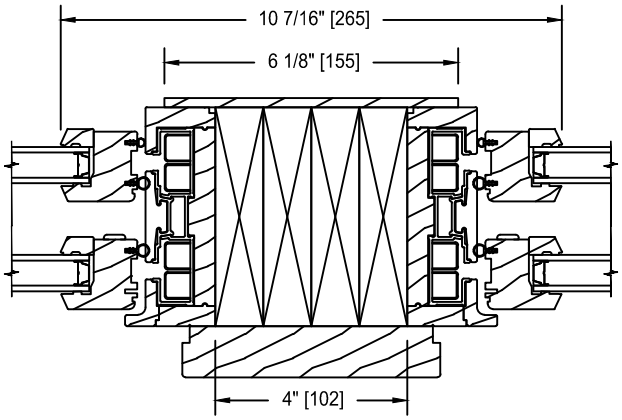

OPERATING / OPERATING
WITH 4" SOLID SPREAD MULL

SCALE: 3" = 1'-0"

JELD-WEN reserves the right to change specifications without notice.

SPREAD MULLION OPTIONS

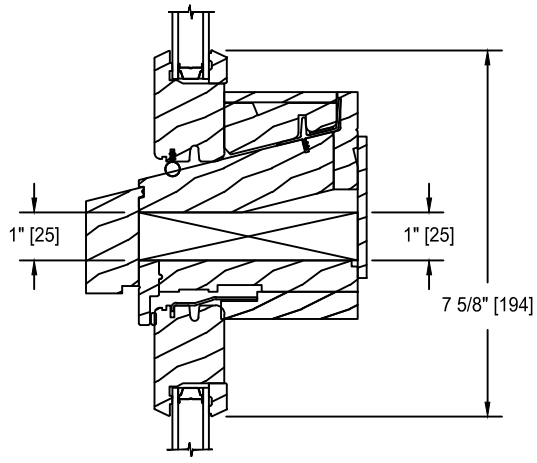

STATIONARY
OPERATING
WITH 1" SOLID SPREAD MULL

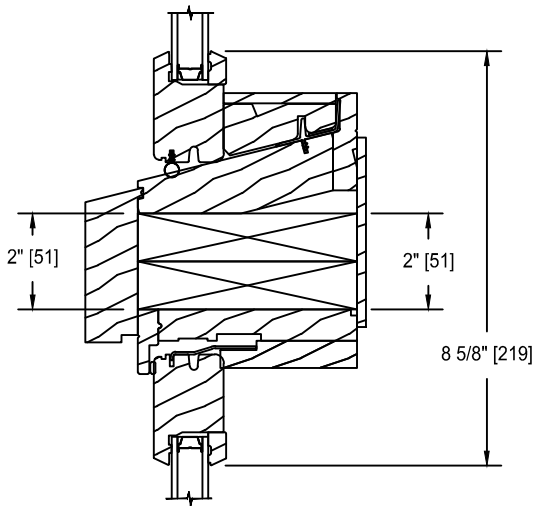

STATIONARY
OPERATING
WITH 2" SOLID SPREAD MULL

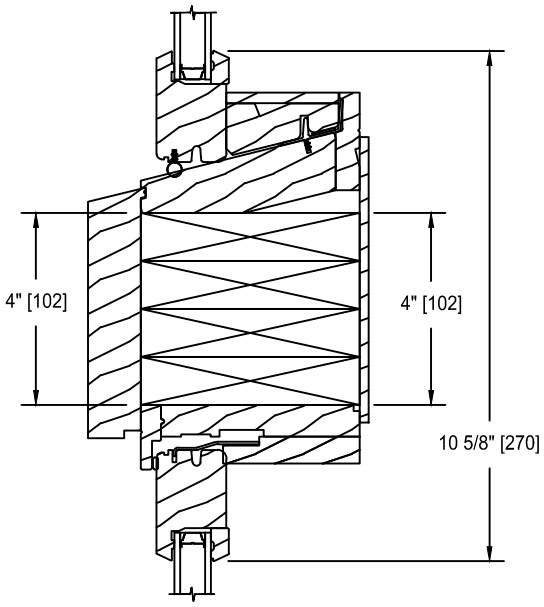

STATIONARY
OPERATING
WITH 4" SOLID SPREAD MULL

SCALE: 3" = 1'-0"

JELD-WEN reserves the right to change specifications without notice.

BAY ROUGH OPENING

BAY WINDOW TRIM OPTIONS
The standard offerings for wood double hung bay windows is 'frame only' and brickmould and sillnose. Other trim options subject to approval.

VERTICAL ROUGH OPENING

Rough Opening typical for all Units

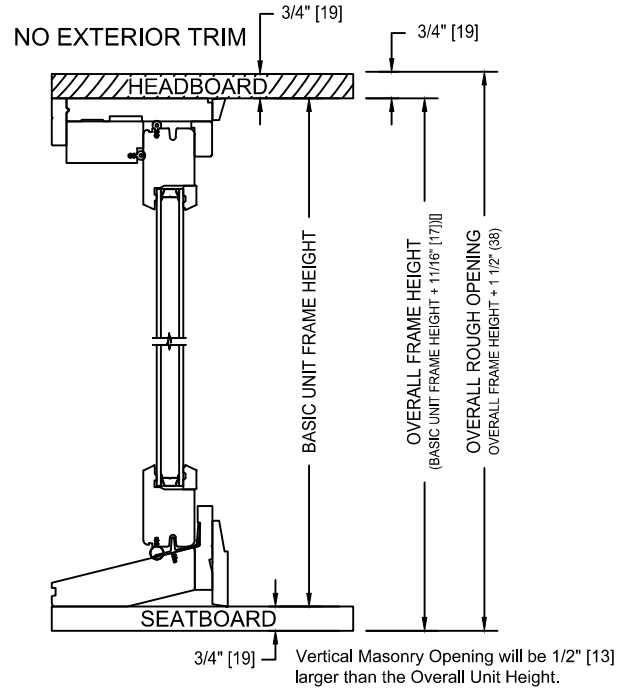

HORIZONTAL ROUGH OPENING

Rough Opening typical for all Units

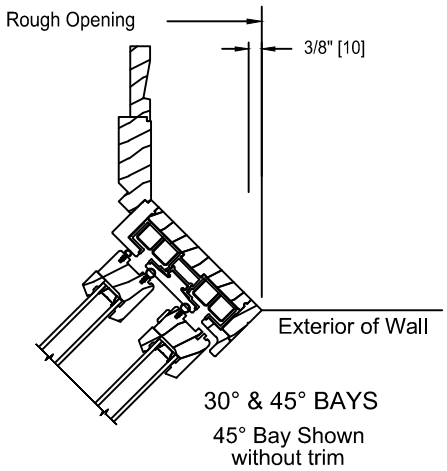

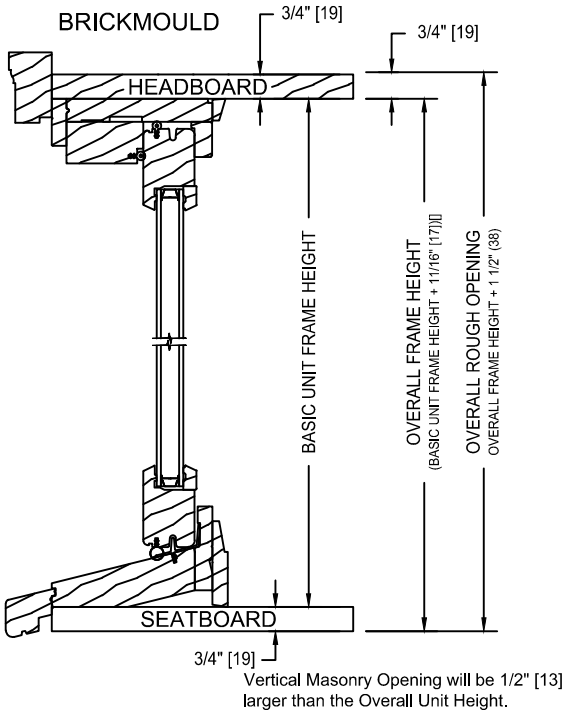

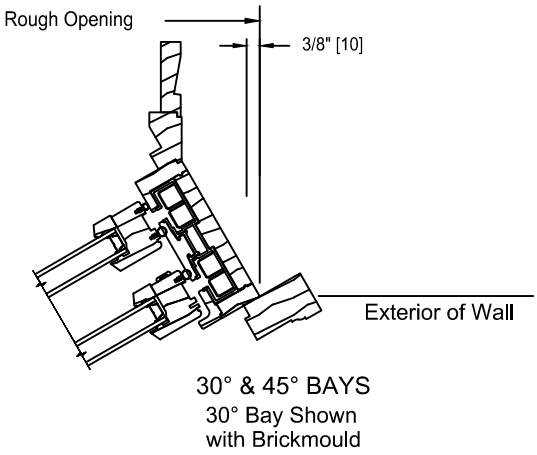

JELD-WEN reserves the right to change specifications without notice.

SCALE: NTS

GLAZING OPTIONS

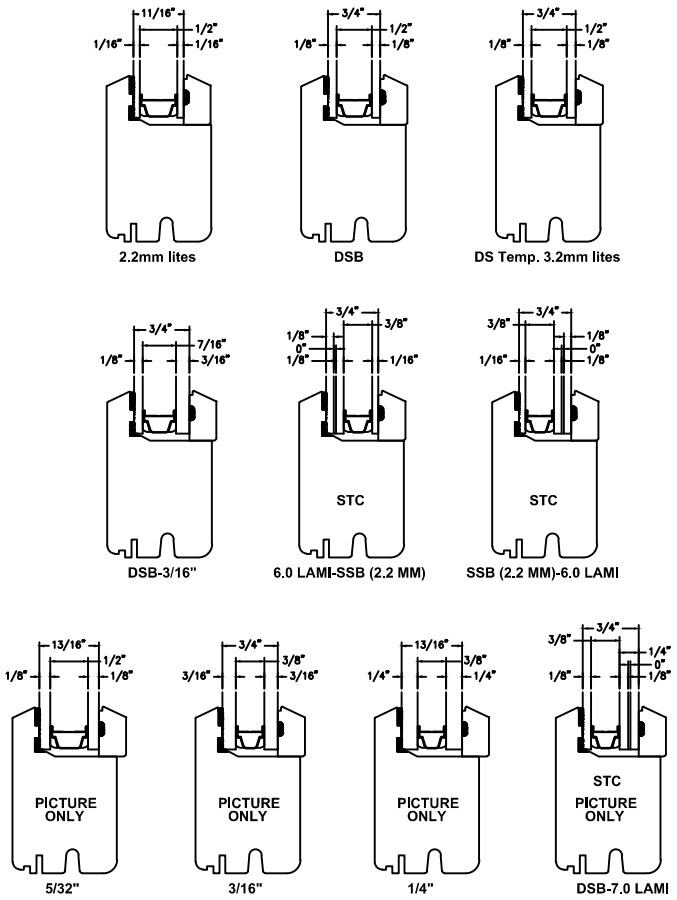

JELD-WEN reserves the right to change specifications without notice.

SCALE: NTS

GLAZING OPTIONS

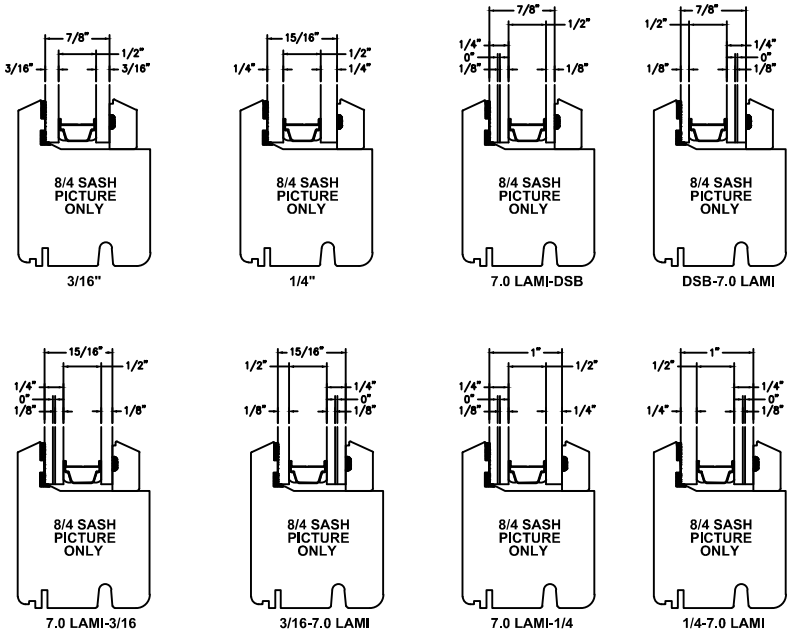

JELD-WEN reserves the right to change specifications without notice.

SCALE: NTS

SDL OPTIONS

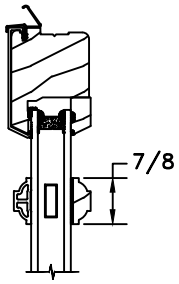

7/8" BEAD SDL W/ LIGHT BRONZE SHADOW BAR

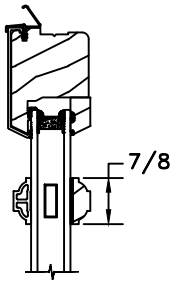

7/8" BEAD SDL W/ SILVER SHADOW BAR

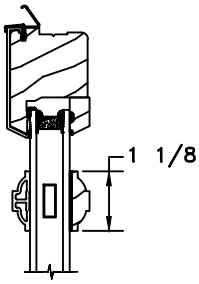

1 1/8" BEAD SDL W/ LIGHT BRONZE SHADOW BAR

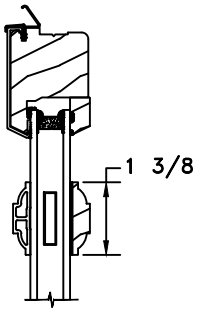

1 3/8" BEAD SDL W/ LIGHT BRONZE SHADOW BAR

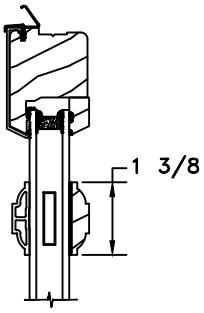

1 3/8" BEAD SDL W/ SILVER SHADOW BAR

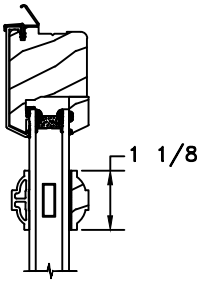

1 1/8" BEAD SDL W/ SILVER SHADOW BAR

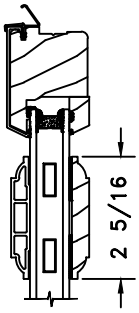

2-5/16" BEAD SDL W/ LIGHT BRONZE SHADOW BAR

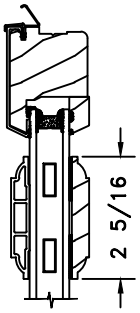

2-5/16" BEAD SDL W/ SILVER SHADOW BAR

JELD-WEN reserves the right to change specifications without notice.

SCALE: NTS

SDL OPTIONS

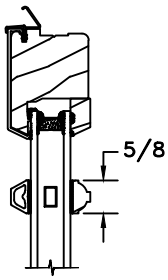

5/8" PUTTY SDL

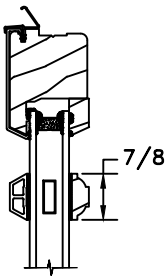

7/8" PUTTY SDL

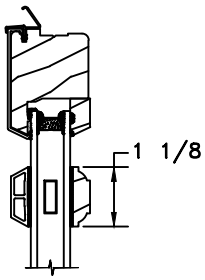

1 1/8" PUTTY SDL

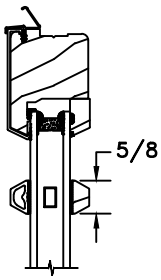

5/8" PUTTY SDL

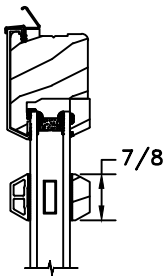

7/8" PUTTY SDL

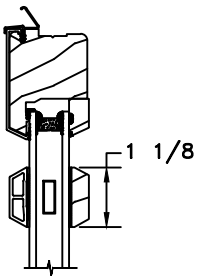

1 1/8" PUTTY SDL

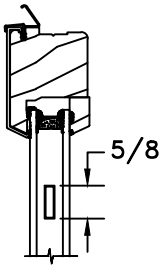

5/8" GBG

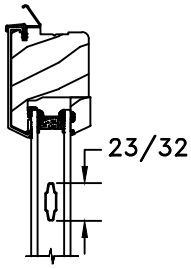

23/32" CONTOUR GBG

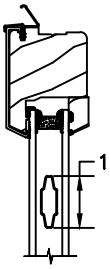

W/ 1" CONTOUR GBG

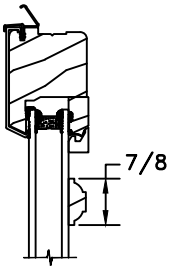

FULL SURROUND 7/8" WOOD GRILLE

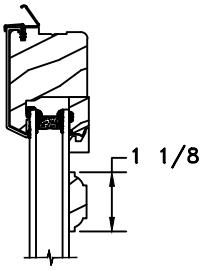

FULL SURROUND 1 1/8" WOOD GRILLE

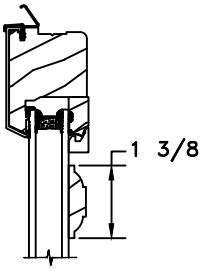

FULL SURROUND 1 3/8" WOOD GRILLE

JELD-WEN reserves the right to change specifications without notice.

SCALE: NTS

VERTICAL SECTION
DOUBLE HUNG OPERATOR

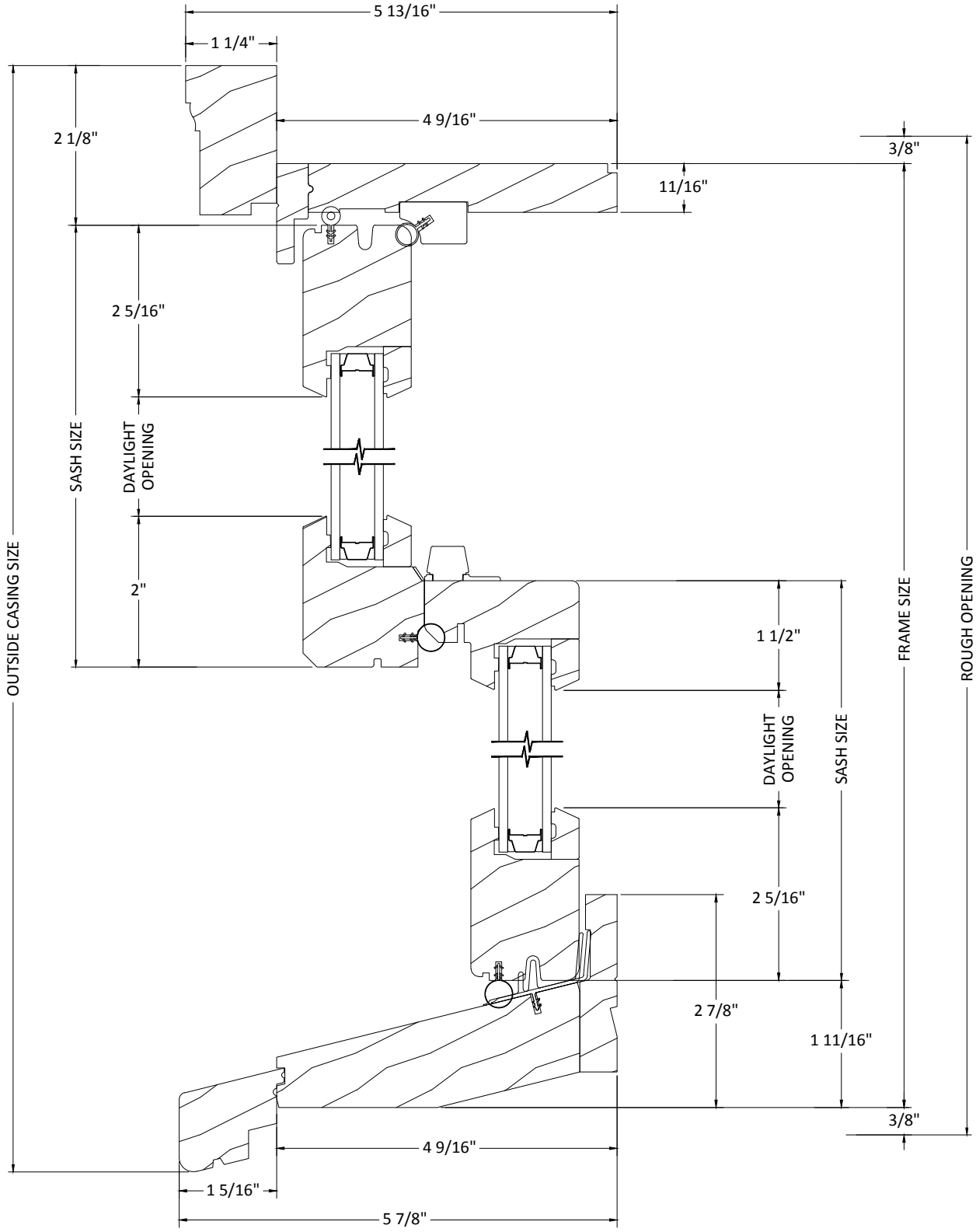

SCALE: 6" = 1'-0"

JELD-WEN reserves the right to change specifications without notice.

HORIZONTAL SECTION
DOUBLE HUNG OPERATOR

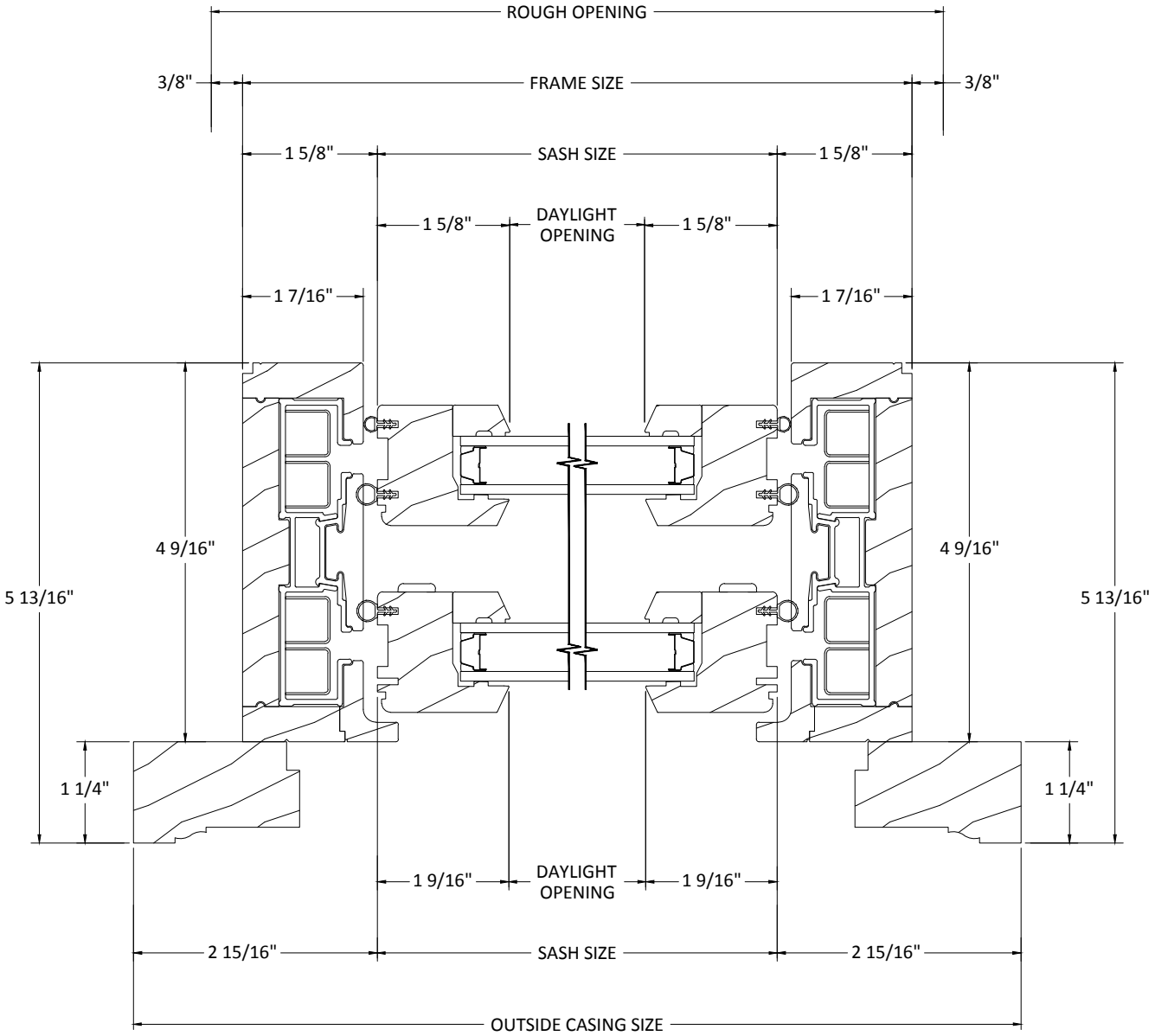

SCALE: 6" = 1'-0"

JELD-WEN reserves the right to change specifications without notice.

VERITCAL SECTION
DOUBLE HUNG PICTURE

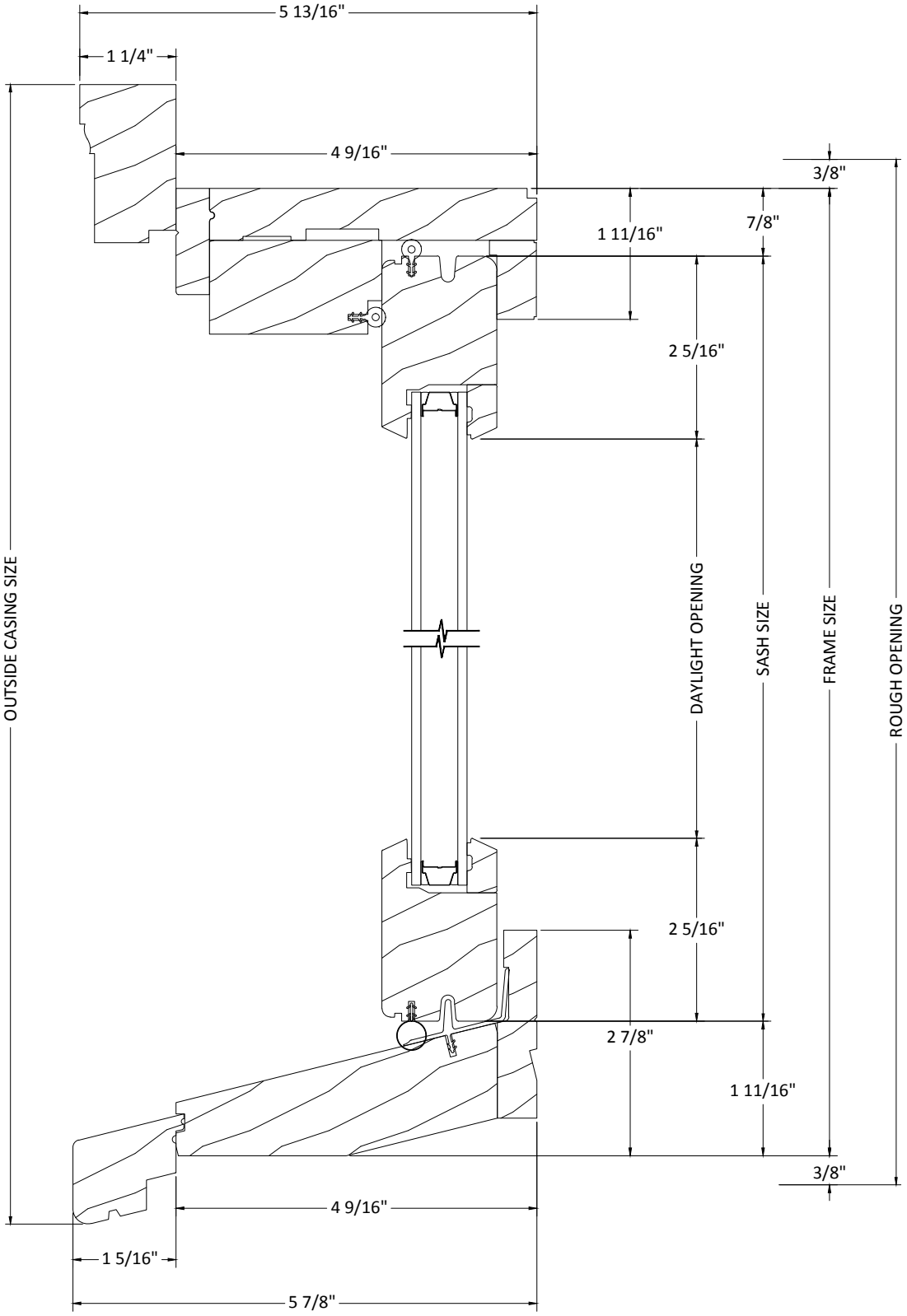

SCALE: 6" = 1'-0"

JELD-WEN reserves the right to change specifications without notice.

HORIZONTAL SECTION
DOUBLE HUNG PICTURE

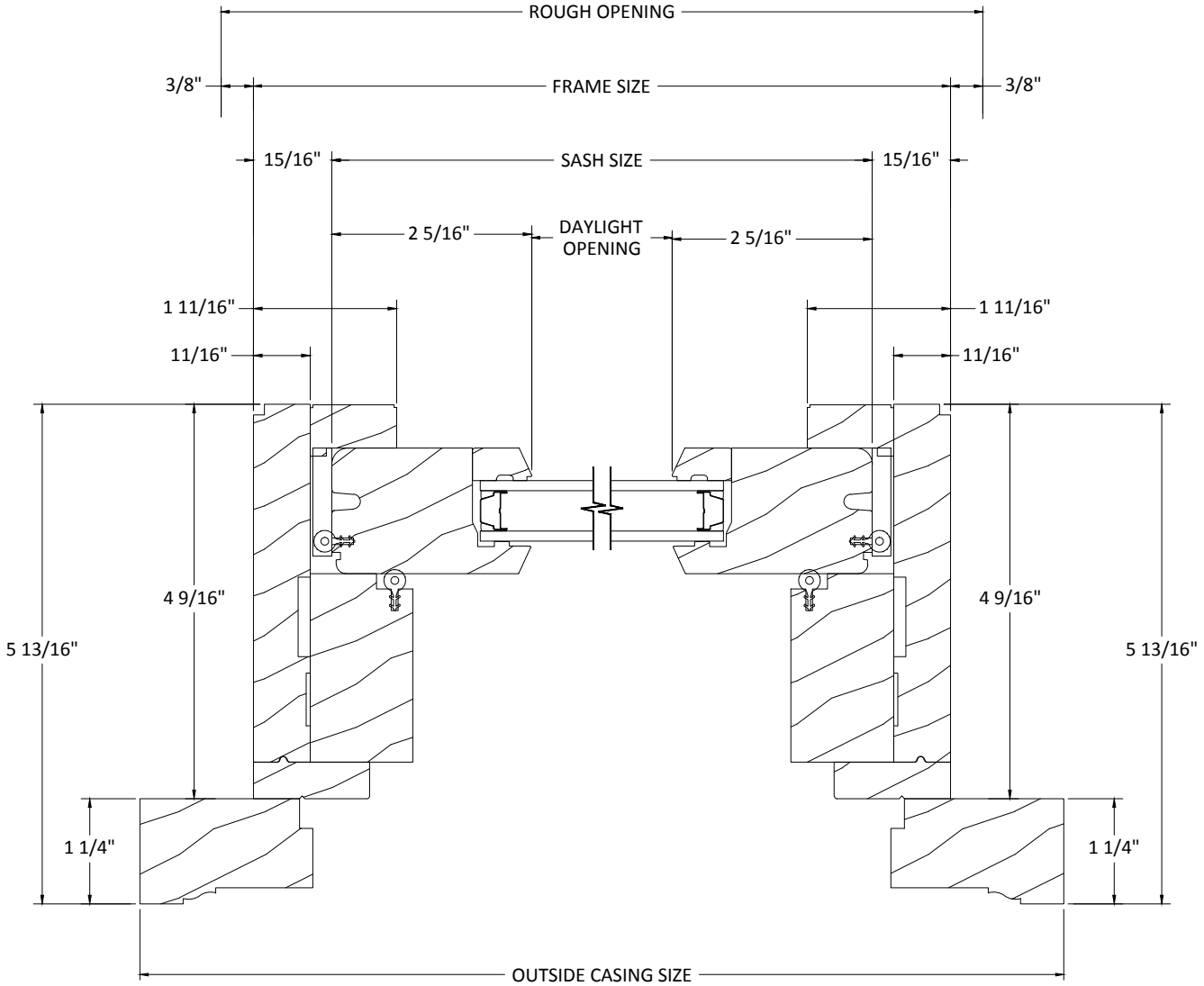

SCALE: 6" = 1'-0"

JELD-WEN reserves the right to change specifications without notice.

VERTICAL SECTION
DOUBLE HUNG TRANSOM

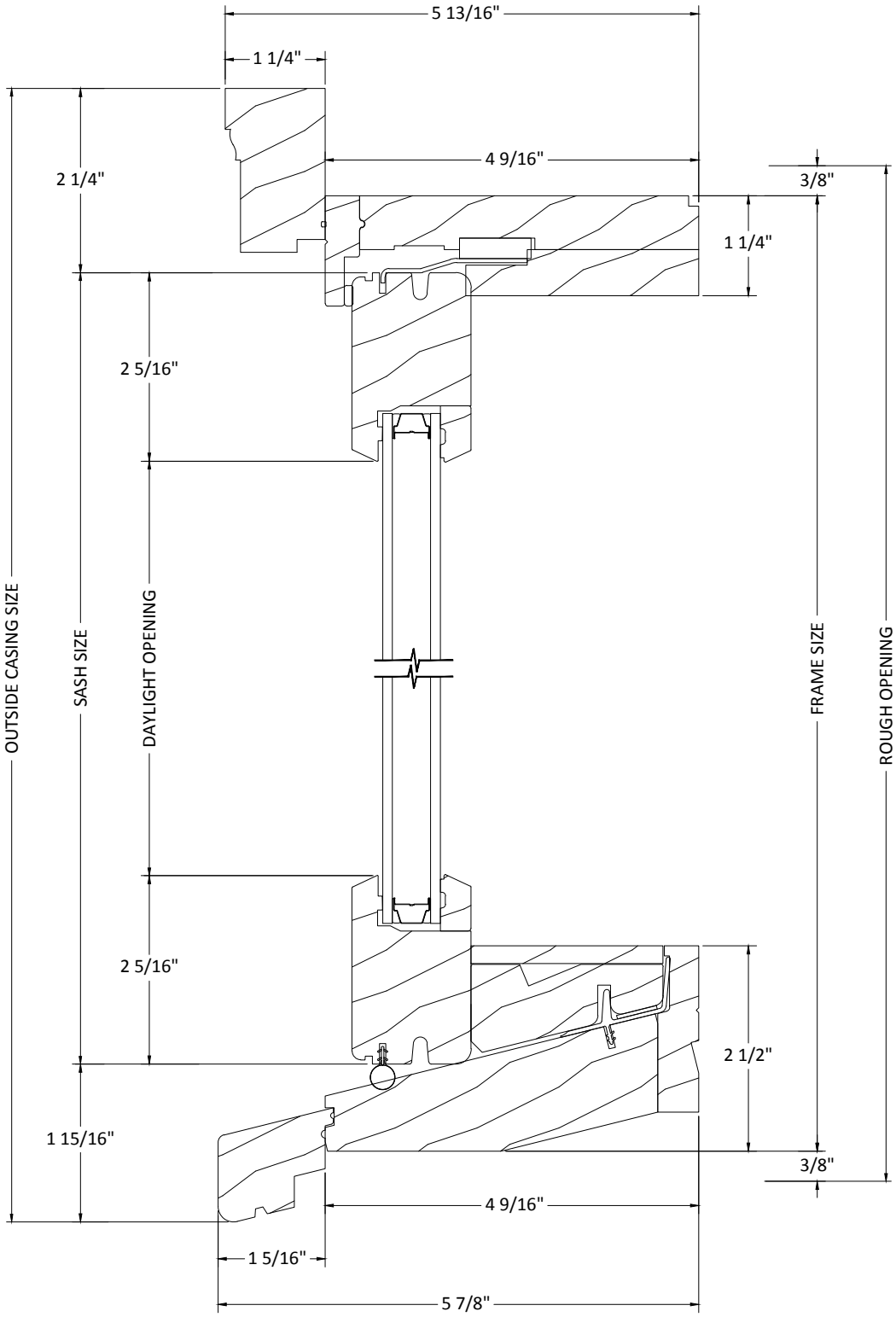

SCALE: 6" = 1'-0"

JELD-WEN reserves the right to change specifications without notice.

HORIZONTAL SECTION
DOUBLE HUNG TRANSOM

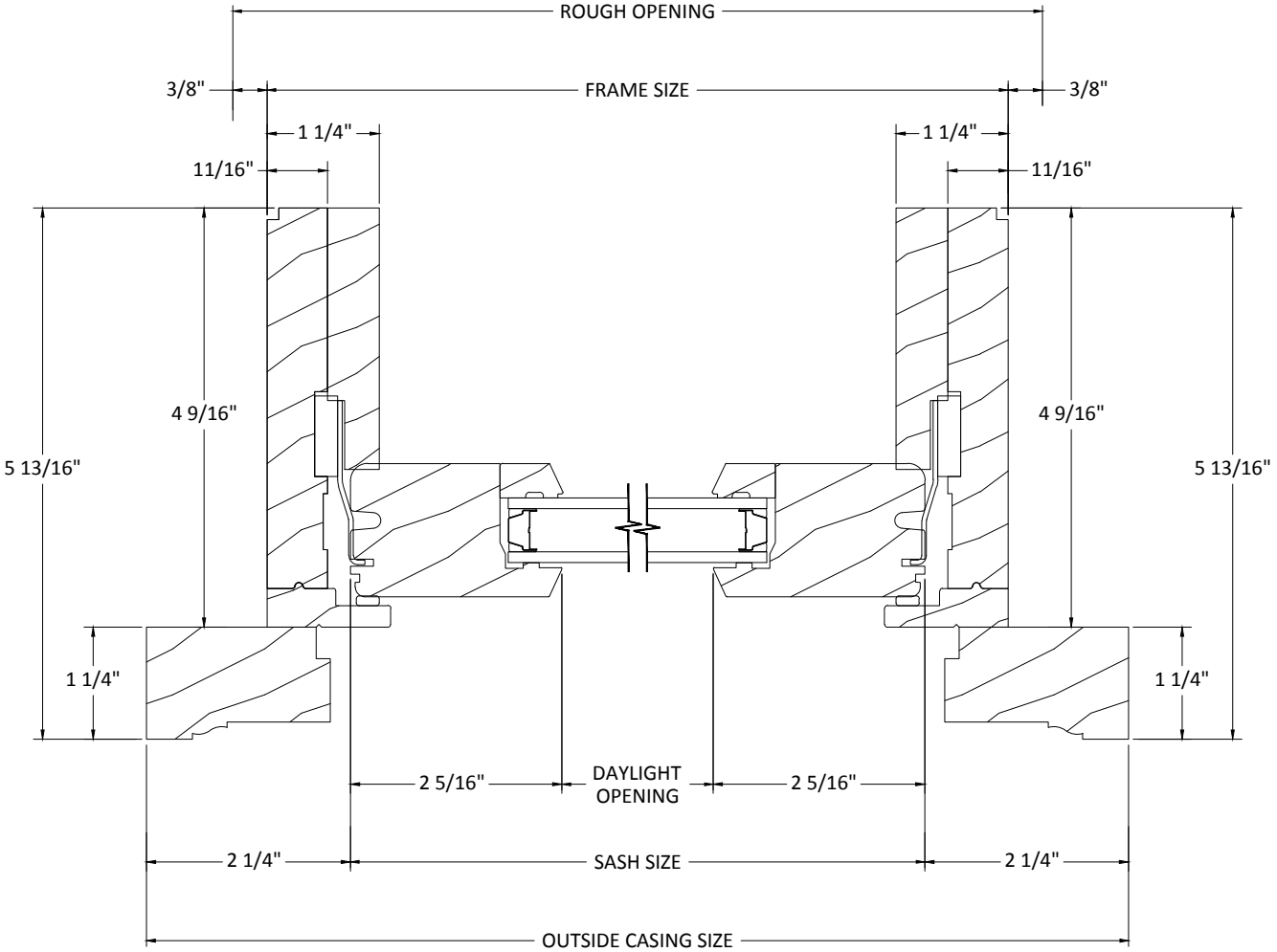

SCALE: 6" = 1'-0"

JELD-WEN reserves the right to change specifications without notice.

MIN-MAX SIZING

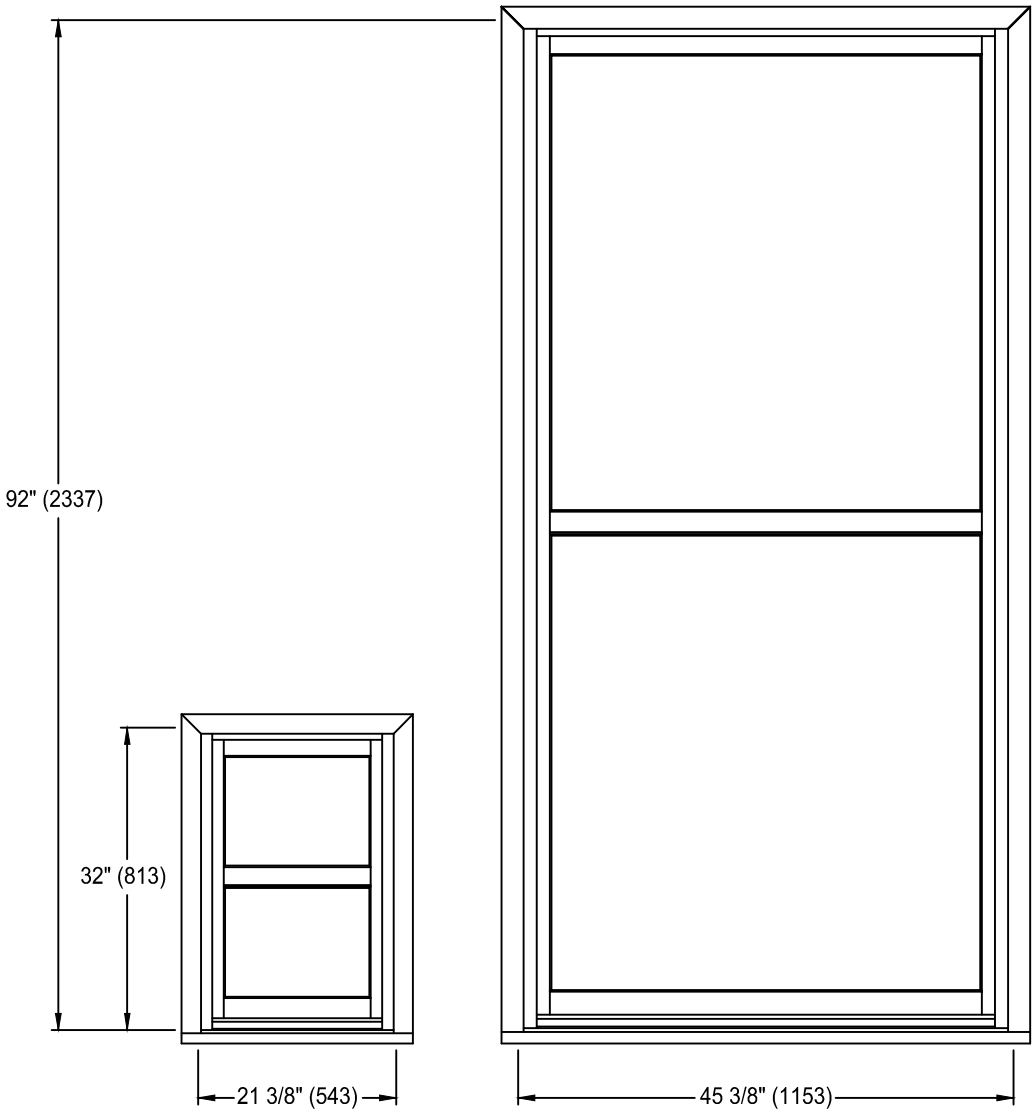

Standard widths for the Siteline Wood Double Hung:
21 3/8"(453mm), 25 3/8"(645mm), 29 3/8"(670mm), 31 3/8"(797mm), 33 3/8"(848mm), 37 3/8"(949mm), 41 3/8"(1051mm), 45 3/8"(1153mm).

Standard heights for the Siteline Wood Double Hung:
32"(813mm), 36"(914mm), 40"(1016mm), 44"(1118mm), 48"(1219mm), 52"(1321mm), 56"(1422mm), 60"(1524mm), 64"(1626mm), 68"(1727mm), 72"(1829mm), 76"(1930mm), 80"(2032mm), 88"(2235mm), 92"(2337mm).

JELD-WEN reserves the right to change specifications without notice.

SCALE: NTS

MIN-MAX SIZING

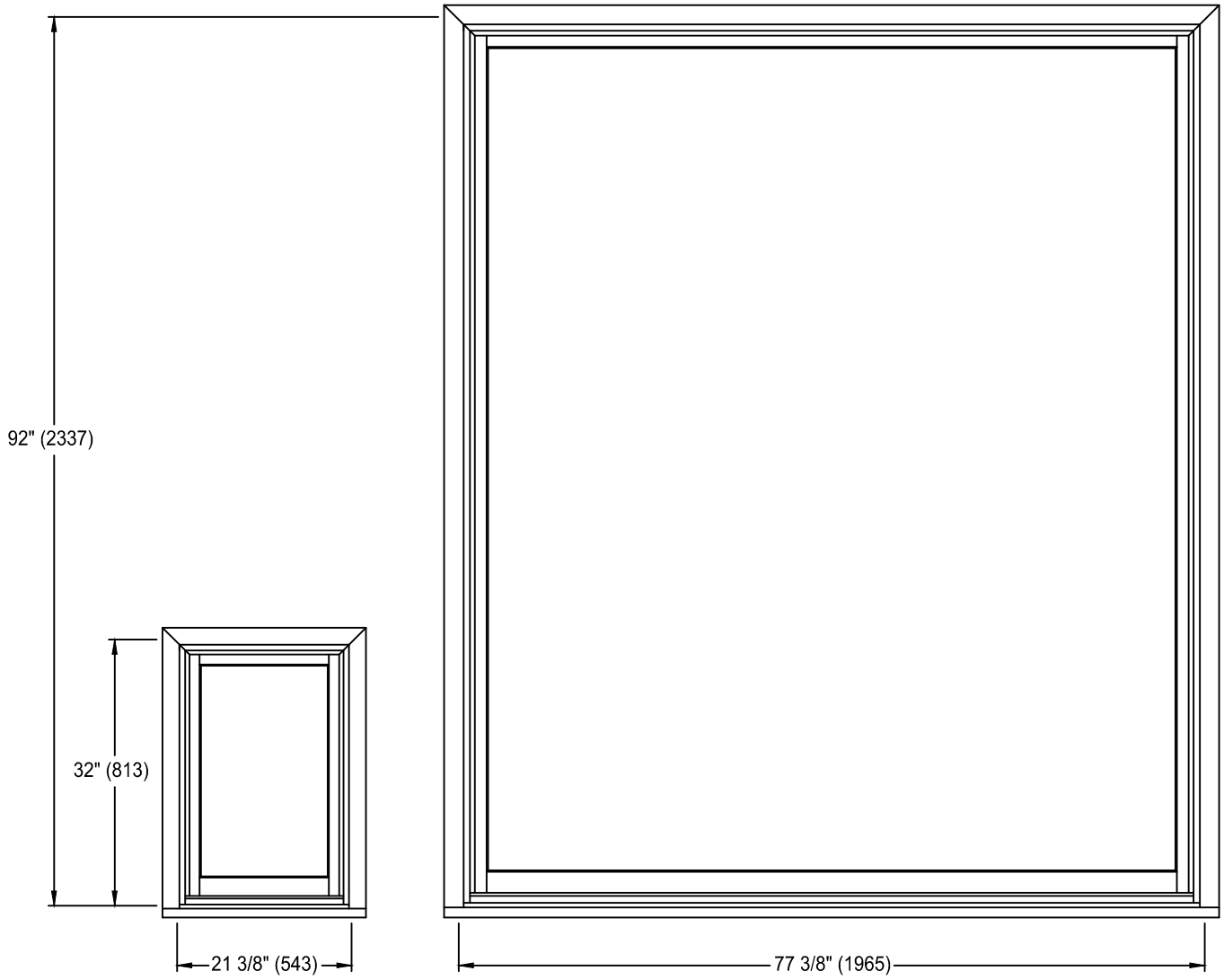

Standard widths for the Siteline Wood Double Hung Picture:
21 3/8"(453mm), 25 3/8"(645mm), 29 3/8"(670mm), 31 3/8"(797mm), 33 3/8"(848mm), 37 3/8"(949mm), 41 3/8"(1051mm), 45 3/8"(1153mm), 49 3/8"(1254), 53 3/8"(1356), 61 3/8"(1559), 69 3/8"(1762), 77 3/8"(1965).

Standard heights for the Siteline Wood Double Hung Picture:
32"(813mm), 36"(914mm), 40"(1016mm), 44"(1118mm), 48"(1219mm), 52"(1321mm), 56"(1422mm), 60"(1524mm), 64"(1626mm), 68"(1727mm), 72"(1829mm), 76"(1930mm), 80"(2032mm), 88"(2235mm), 92"(2337mm).

JELD-WEN reserves the right to change specifications without notice.

SCALE: NTS

MIN-MAX SIZING

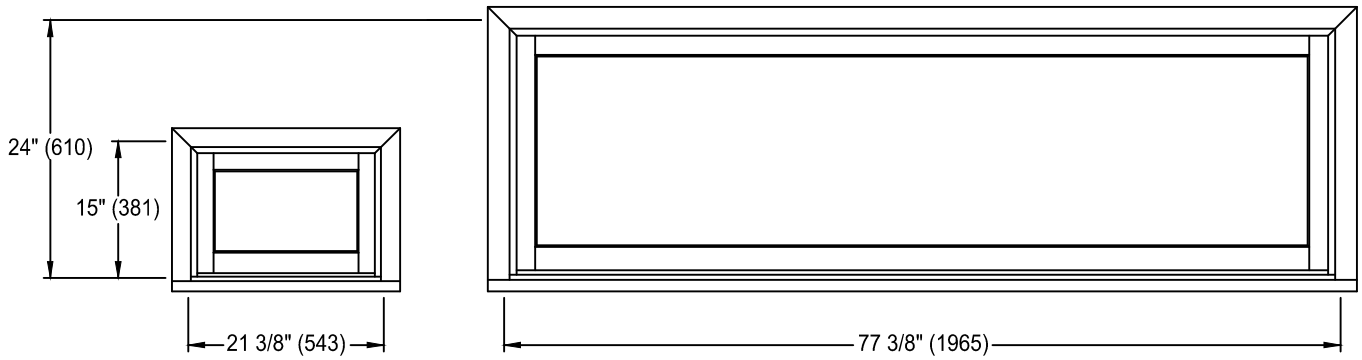

Standard widths for the Siteline Wood Double Hung Transom:
21 3/8"(453mm), 25 3/8"(645mm), 29 3/8"(670mm), 31 3/8"(797mm), 33 3/8"(848mm), 37 3/8"(949mm), 41 3/8"(1051mm), 45 3/8"(1153mm), 49 3/8"(1254mm), 53 3/8"(1356mm), 61 3/8"(1559mm), 69 3/8"(1762mm), 77 3/8"(1965mm).

Standard heights for the Siteline Wood Double Hung Transom:
15"(381mm), 18"(457mm), 24"(610mm).

JELD-WEN reserves the right to change specifications without notice.

SCALE: NTS

brickmoon
DESIGN

To: Houston Archaeological and Historical Commission

From: Brickmoon Design

Date: July 6th, 2016

Subject: COA Application – 3320 Beauchamp Street Description

This project consists of a renovation to the existing front porch, an interior remodel of the existing house, and a one story addition at the back of the residence. The proposed work to the front porch will remove the portion of the porch that has been turned into conditioned space and take it back to the original wrap-around porch. New windows will be installed to match the existing front windows and new wood siding will be installed to match the existing siding at the front of the house.

The remodel of the existing house includes the removal of several existing, non-original windows along the side and rear of the house. According to the Sanborn maps provided by the HAHC staff, the existing kitchen, living room, and master bedroom areas were later additions to the original house. We are proposing to remove 8 existing, non-original windows that are part of these later additions. The remodel also includes adding 6 new crawlspace vents along the north side of the existing house. There is currently a solid concrete beam along the north side with no ventilation for the crawlspace foundation. Per a structural engineer's recommendation, crawlspace vents will be added to allow for proper air flow through the crawlspace.

The proposed addition is located completely behind the original extent of the home and is not visible from the public right of way. The roof line of the addition stays below that of the existing roof. The addition will have cementitious siding with a 6" exposure pattern that will differentiate it from the siding material of the existing house.

Please see photos of the existing house below.

Existing front elevation photo

Existing front and left side elevation photo

Existing front and right side elevation photo. View of original porch that was enclosed. Proposing to return porch to original wrap-around porch.

Existing back and left side elevation photo

Existing back elevation photo. Proposing to remove existing screen porch.

Existing right side elevation.

Existing right side elevation photo.

BEC-LIN ENGINEERING, L.P.
Structural • Civil • Surveying • Construction Management

June 10, 2016 BL-16-1318

Client: Danielle Nichols
Brickmoon Design
1438 Campbell Road, Suite 202
Houston, Texas 77055

Phone: 281-501-2712

Re: Residence at 3320 Beauchamp Street, Houston, Texas 77009

Dear Ms. Nichols:

BEC-LIN Engineering, LP (BL) visited the above mentioned residence to perform observations of the existing structure and to comment on those observations.

Conclusions presented herein are based solely on observations made and information received from the client. BL makes no representation regarding the possibility of concealed defects. In addition, should additional information concerning the structure become available, BL shall reserve the right to review that information and modify this report as appropriate. Contained herein are our observations and comments.

During our site visit on June 2, 2016 we noted the following:

- The residence is a one story, single family residence with a detached garage.
- The structure is of wood frame construction with a crawlspace foundation and a composite shingle roof.
- There are cracks in the exterior concrete beam along the left side of the residence.
- There are no vents for the crawlspace along the left side of the residence.
- There is lattice as ventilation for the crawl space along the right side of the residence.
- There is drywall tape buckling in the hall bath.
- Floor relative elevations were measured on the first floor using a "Zip level" by Technidea, an electronic measuring device. This survey found that elevations ranged from a high of +0.3" to a low of -2.5" for an overall change in elevation of 2.8" in the residence (see attached sketch). The elevation readings in the residence have been adjusted for changes in floor coverings and changes in floor elevations.

In our opinion, based on our observations and reported information, we suggest the following:

- Adjust the crawlspace utilizing metal shims as required to bring the floor elevations within tolerance.
- Install vents for the crawlspace along the left side of the residence.
- The crack in the concrete beam can be repaired by utilizing a concrete crack repair product such as "Crack-Pac" by Simpson Strong Tie (or equal) and installed per the manufacturer's recommendations.

- It is our understanding that the owner would like to move a wall between the kitchen and family room as part of the remodeling scope of work. In our opinion this can be accomplished assuming that additional supports will be added in the crawl space to support the new loads.

This report is provided by a licensed Professional Engineer and is valid as of the date of the site visit. It excludes conditions and events that may occur after the site visit. This report makes no guarantee that every possible discrepancy has been cited. BL makes no claim concerning any activity or conditions falling outside the specified purpose to which this report is directed. In addition, no warranty, expressed or implied, is hereby made for the professional services set forth. No responsibility is assumed for events that occur subsequent to the submission of this report. Should additional information regarding the condition of this residence become available, the undersigned reserves the right to review such information and modify this report, as appropriate.

Only the foundation and related conditions mentioned above were reviewed. The structural capacity of the framing was not reviewed nor analyzed. Since there were no as-built foundation plans available, nor any information on the exact preparation of the sub-grade beneath the foundation, the overall analysis and opinions are limited by these factors.

In recognition of the relative risks, rewards, and benefits of the service provided, to both the client and BL, the risks have been allocated such that the client agrees, as evidenced by acceptance and use of this report, that the liability of BL is limited to the value of the service provided and the client shall indemnify and hold BL harmless from and against any and all claims, liabilities, obligations, costs, or expenses (including reasonable attorneys' fees) arising by reason of or associated with the performance of all services hereunder. In addition, should any additional work related to this evaluation be required, regardless of the nature of such work, such work would be considered an additional assignment and would be invoiced, as appropriate.

We thank you for the opportunity to be of service. If you have any questions, please contact us.

Sincerely,

STATE OF TEXAS
KARL JOHN BRECKON
73425
REGISTERED PROFESSIONAL ENGINEER

6-10-16

Karl Breckon, P.E.
BEC-LIN Engineering, LP

Photo #1 – Crack in concrete beam

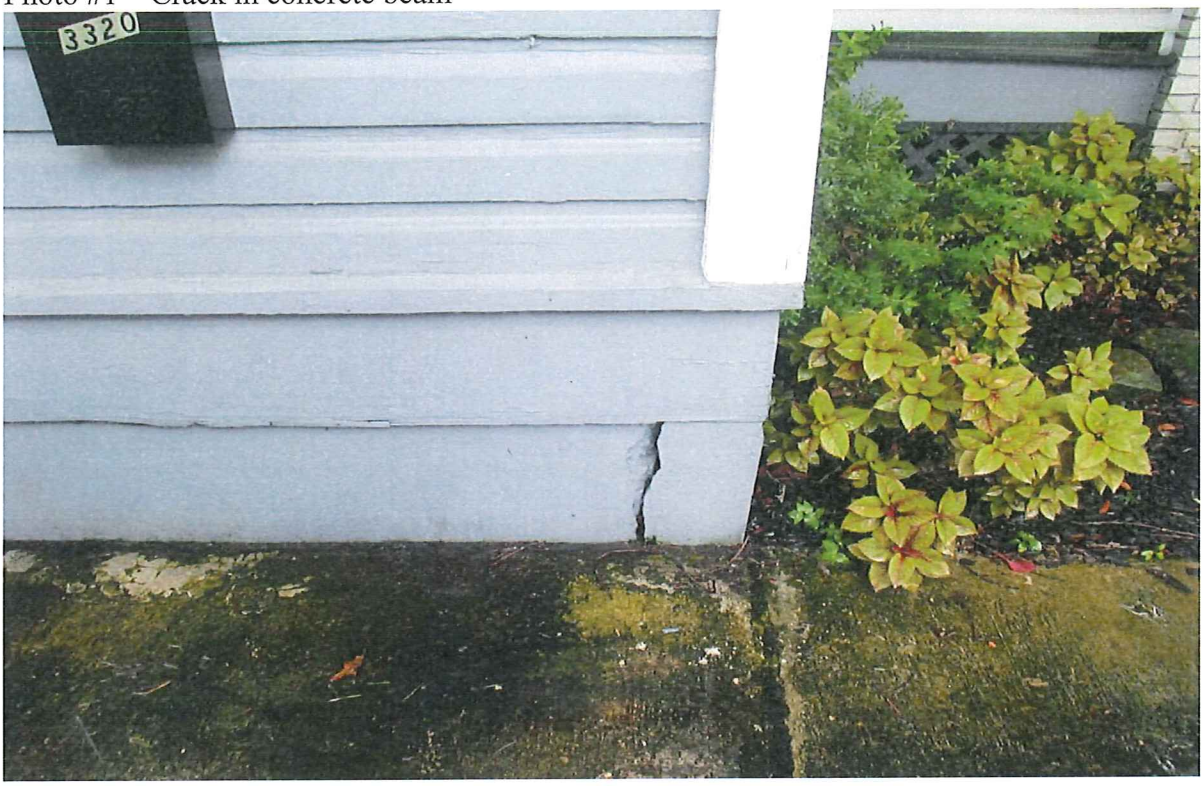

Photo #2 – Left side elevation (no vents in crawlspace)

Photo #3 – Crack in concrete beam

Photo #4 – Crawlspace vent at left rear of residence

Photo #5 – Right side elevation

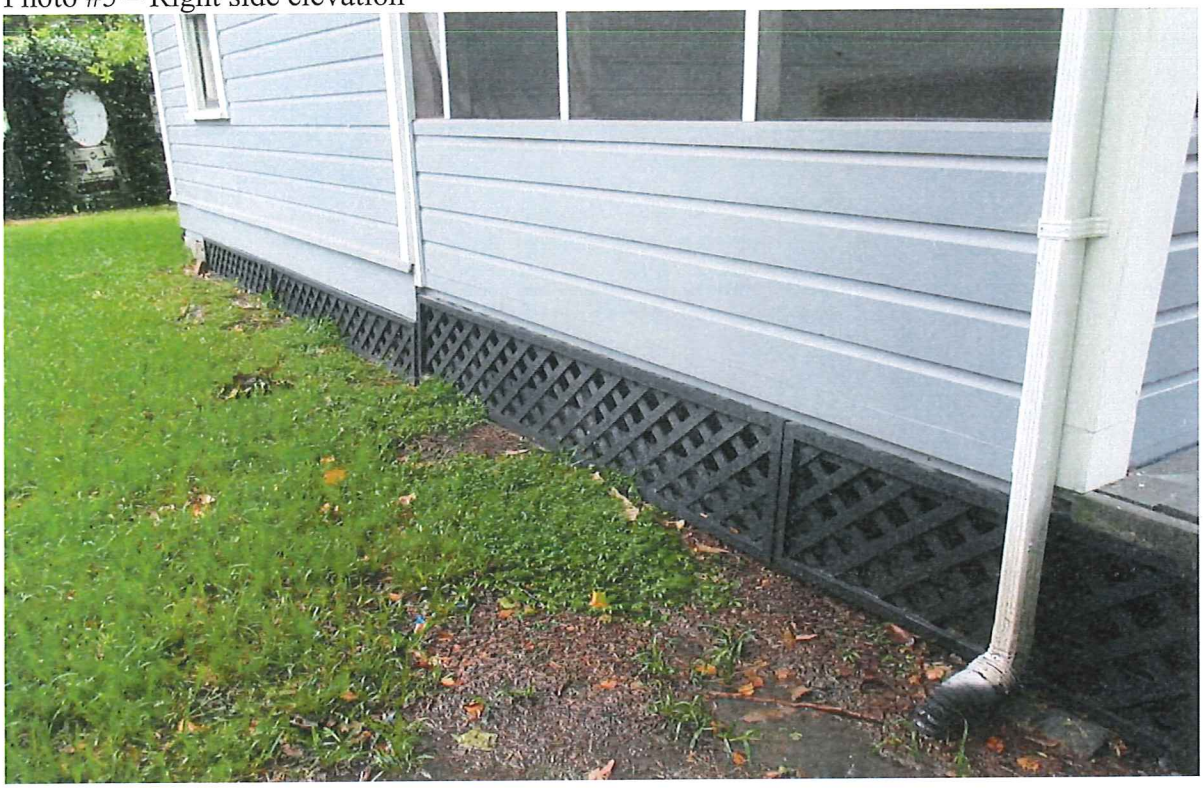

Photo #6 – CMU Blocks supporting the crawl space

Photo #7 – Front elevation

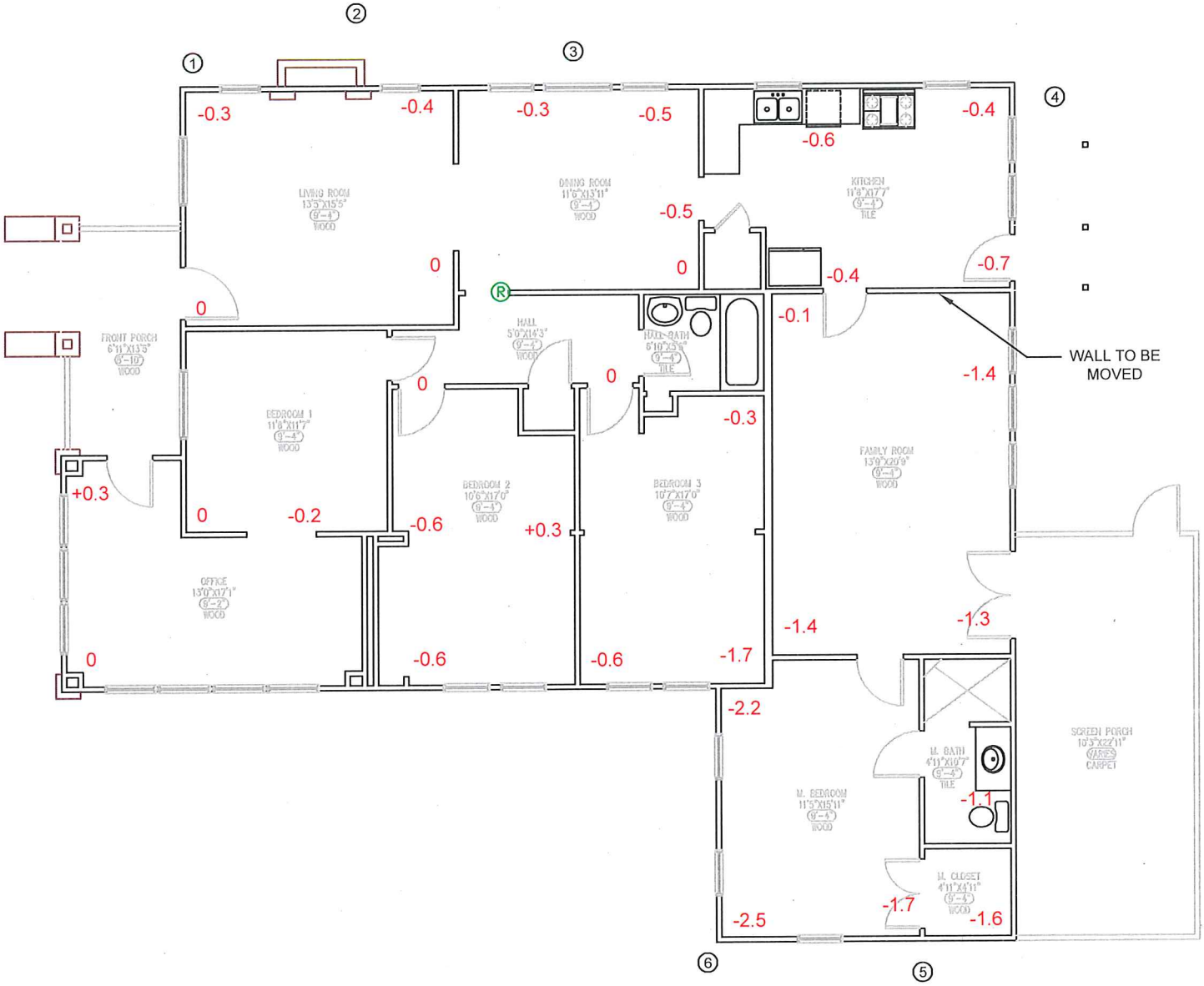

R REFERENCE POINT
CIRCLED NUMBERS REPRESENT THE LOCATION OF THE PHOTOGRAPHS TAKEN DURING THE INSPECTION

BEC-h
10401 West Office Dr.
Houston, Texas 77042
Tel. 281.664.8440
Fax. 281.664.8457
Texas Engineering Firm # F13056

BRICKMOON DESIGN
3320 BEAUCHAMP STREET
HOUSTON, TEXAS 77009

JUNE 2016

Rev 0

BL-16-1318

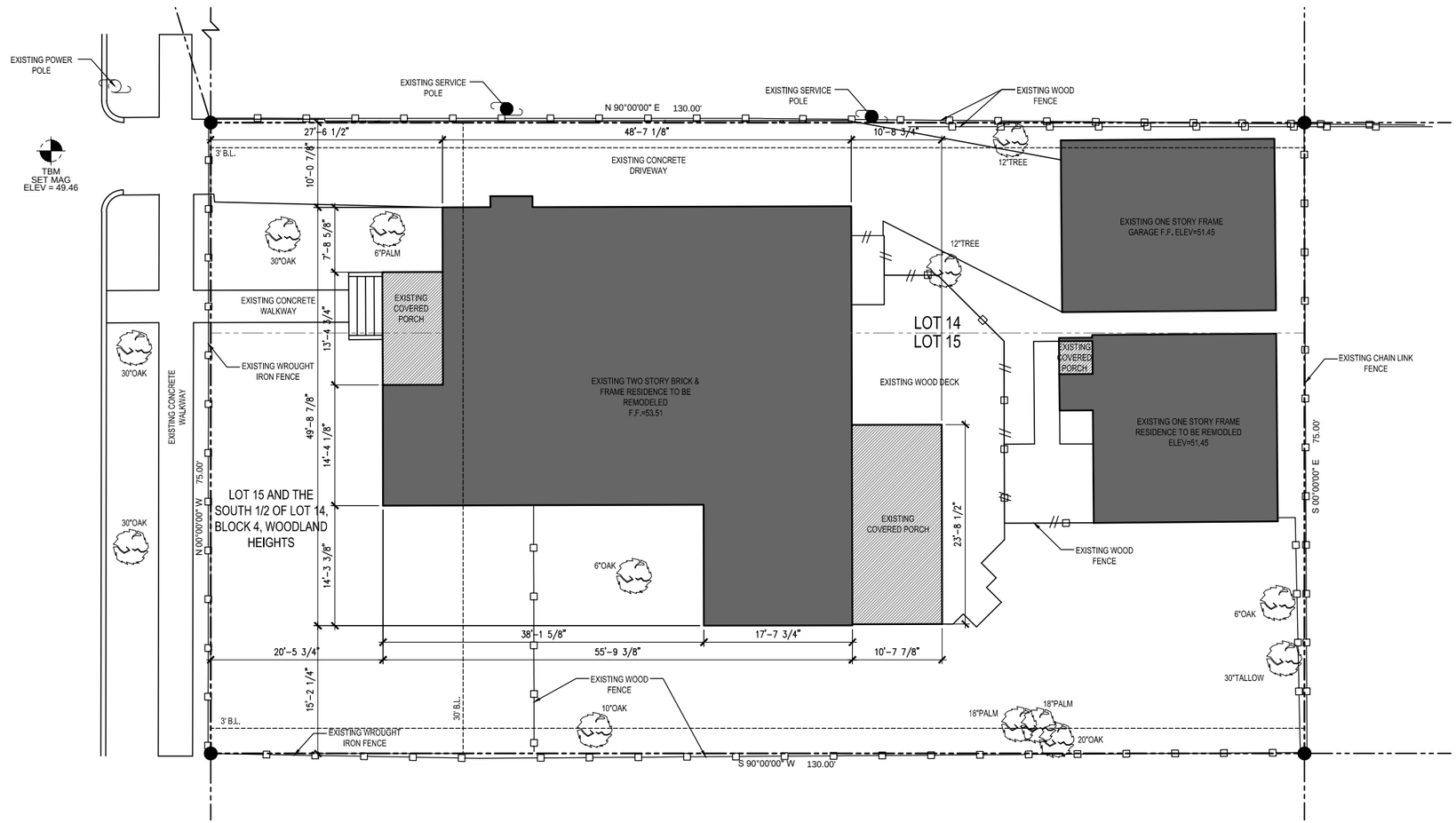

LEGEND

- EXISTING RESIDENCE
- EXISTING COVERED AREA

N

06.16.16

3320 BEAUCHAMP ST.

GEHMAN RESIDENCE

EXISTING SITE PLAN

SCALE: 1/16" = 1'-0"

Square Footage:

LOWER LEVEL	2,020 S.F.
TOTAL AC	2,020 S.F.
FRONT PORCH	91 S.F.
SCREEN PORCH	248 S.F.
TOTAL PORCHES	339 S.F.
GARAGE	500 S.F.
GARAGE APARTMENT	517 S.F.
TOTAL COVERED	3,376 S.F.

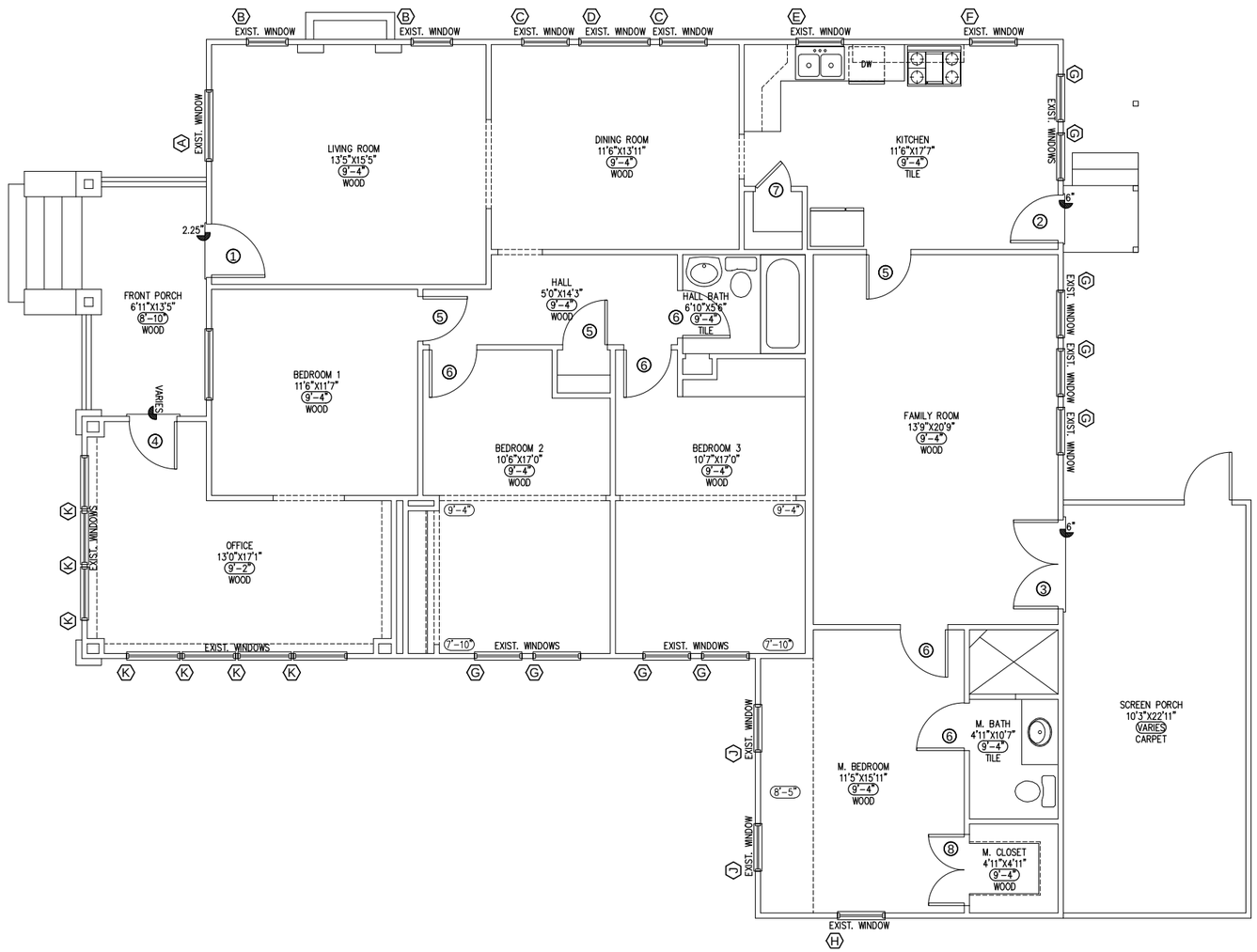

N

06.16.16

3320 BEAUCHAMP ST.

GEHMAN RESIDENCE

EXISTING FIRST FLOOR PLAN

SCALE: 1/8" = 1'-0"

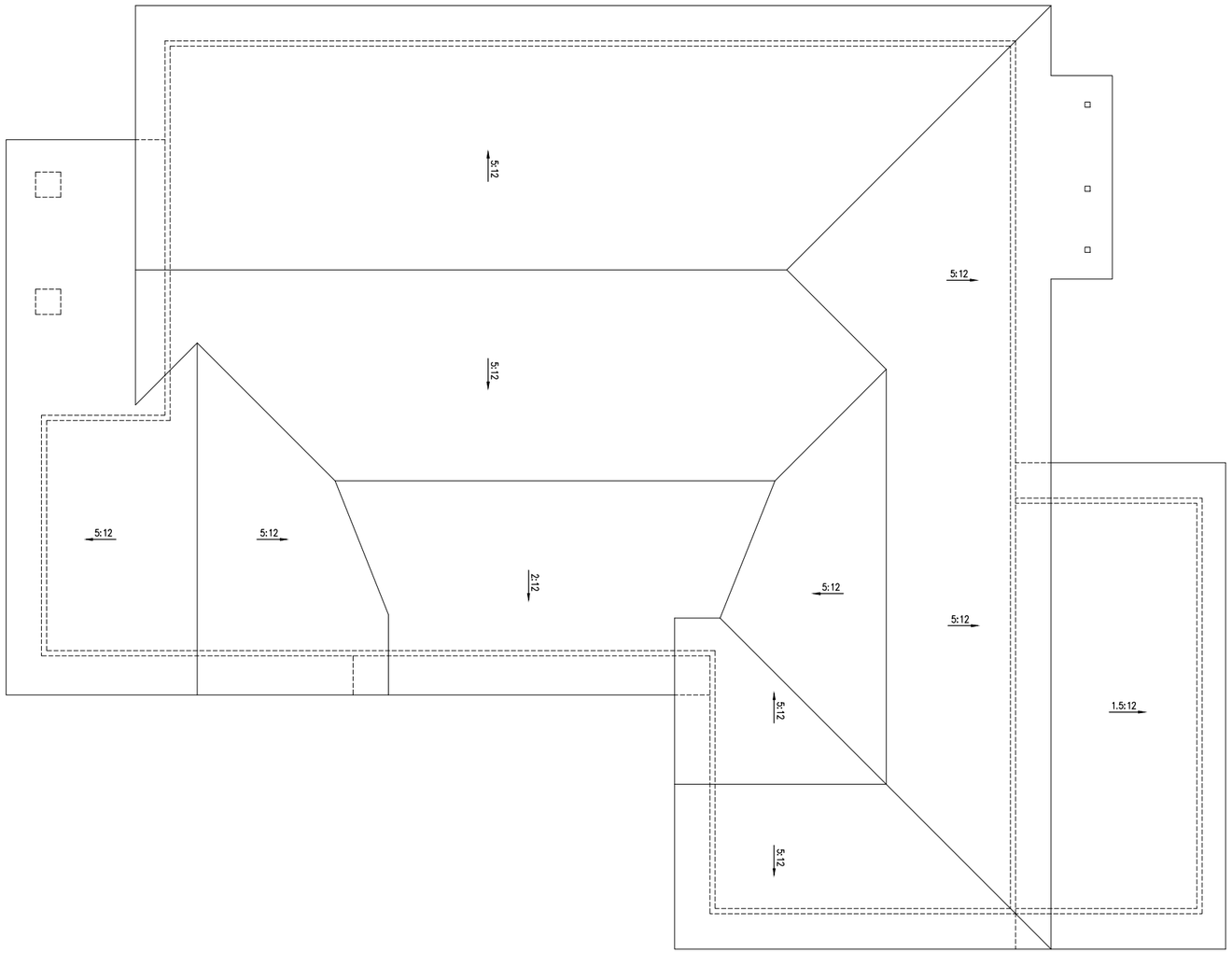

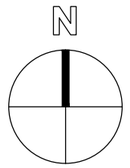

06.16.16

3320 BEAUCHAMP ST.

GEHMAN RESIDENCE

EXISTING ROOF PLAN

SCALE: 1/8" = 1'-0"

FRONT

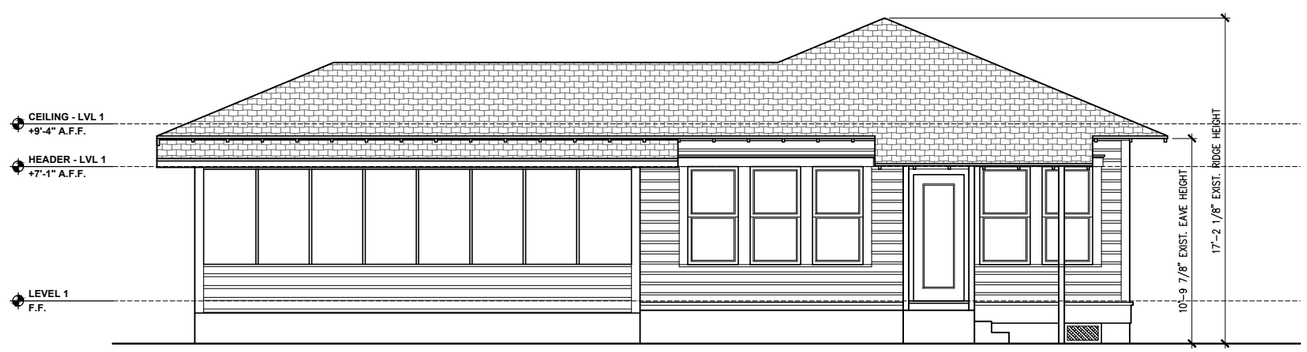

REAR

06.16.16

3320 BEAUCHAMP ST.

GEHMAN RESIDENCE

EXISTING ELEVATIONS

SCALE: 1/8" = 1'-0"

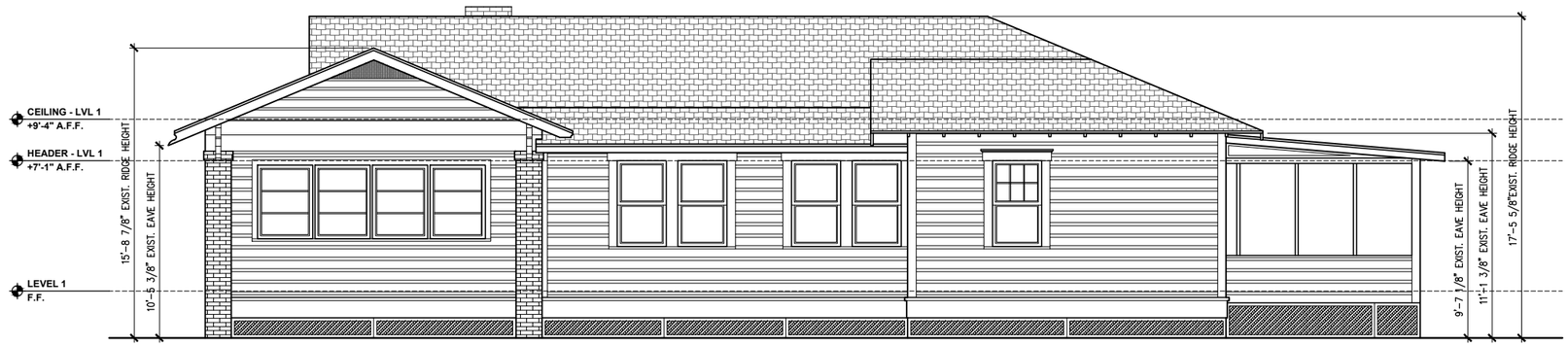

RIGHT

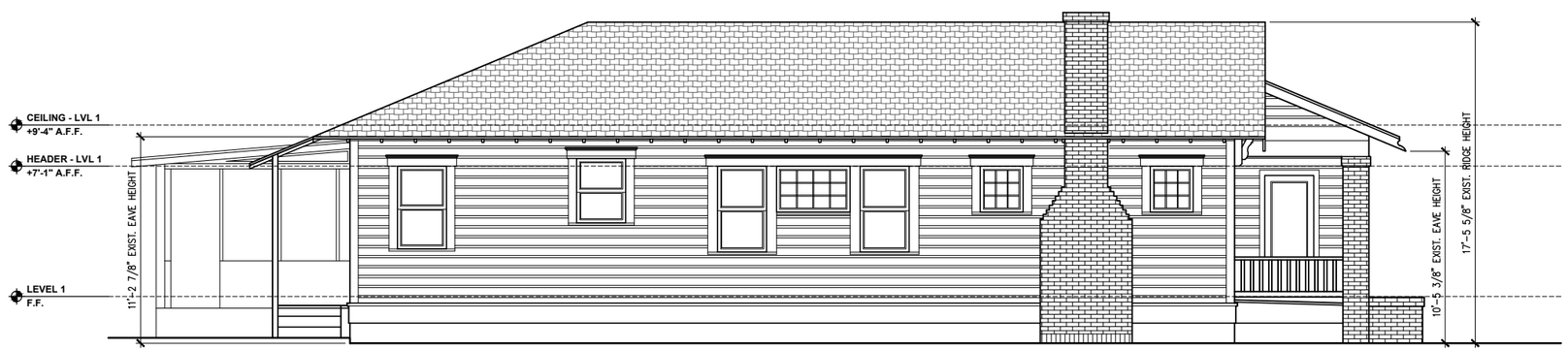

LEFT

06.16.16

3320 BEAUCHAMP ST.

GEHMAN RESIDENCE

EXISTING ELEVATIONS

SCALE: 1/8" = 1'-0"

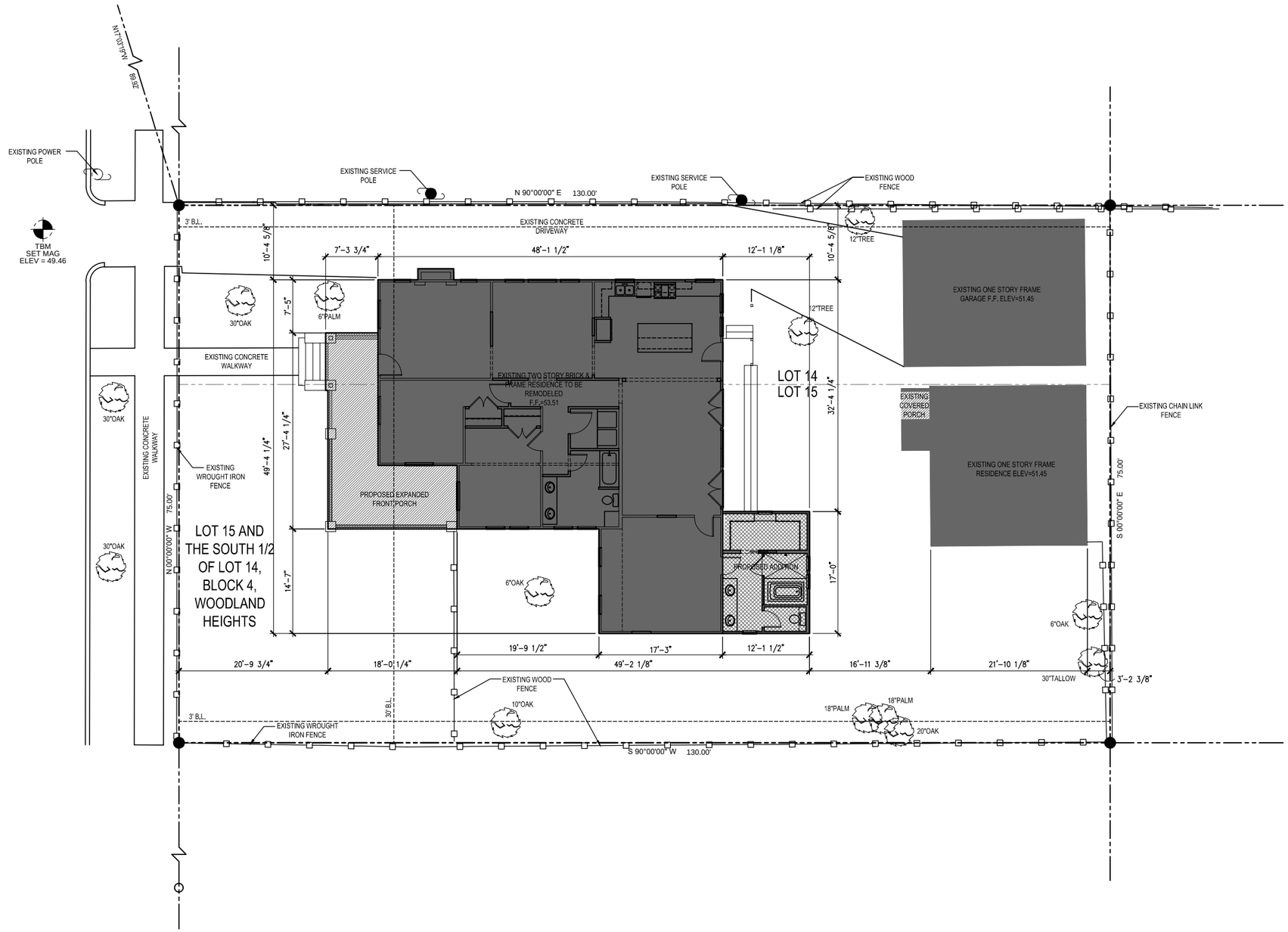

PROPOSED SITE PLAN

SCALE: 1/16" = 1'-0"

N

06.16.16

3320 BEAUCHAMP ST.

GEHMAN RESIDENCE

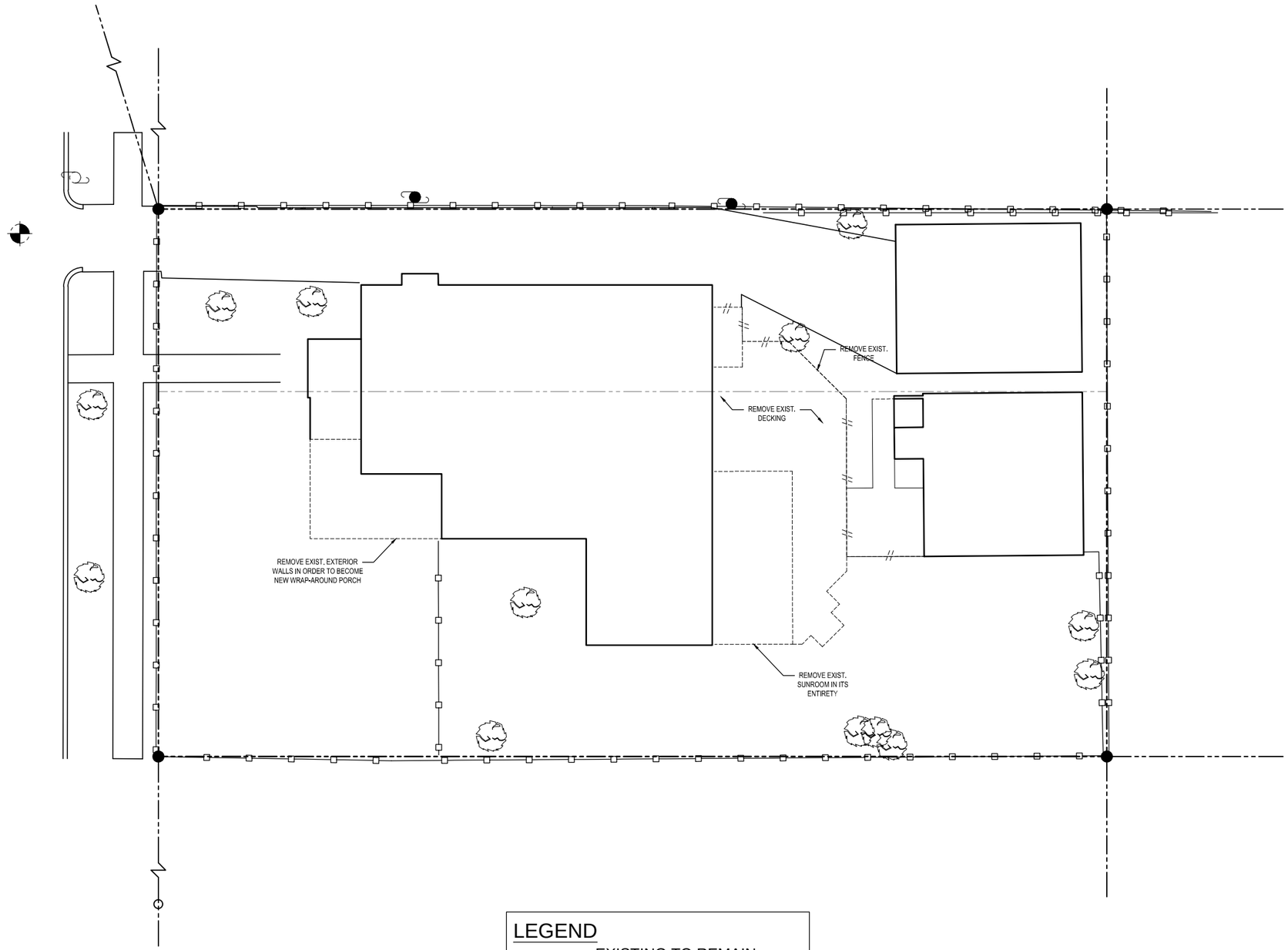

LEGEND

EXISTING TO REMAIN

DEMO

NOTE:
CONTRACTOR TO FIELD VERIFY THE EXTENT OF DEMOLITION AS IT PERTAINS TO CONSTRUCTABILITY.

N

06.16.16

3320 BEAUCHAMP ST.

GEHMAN RESIDENCE

DEMO SITE PLAN

SCALE: 1/16" = 1'-0"

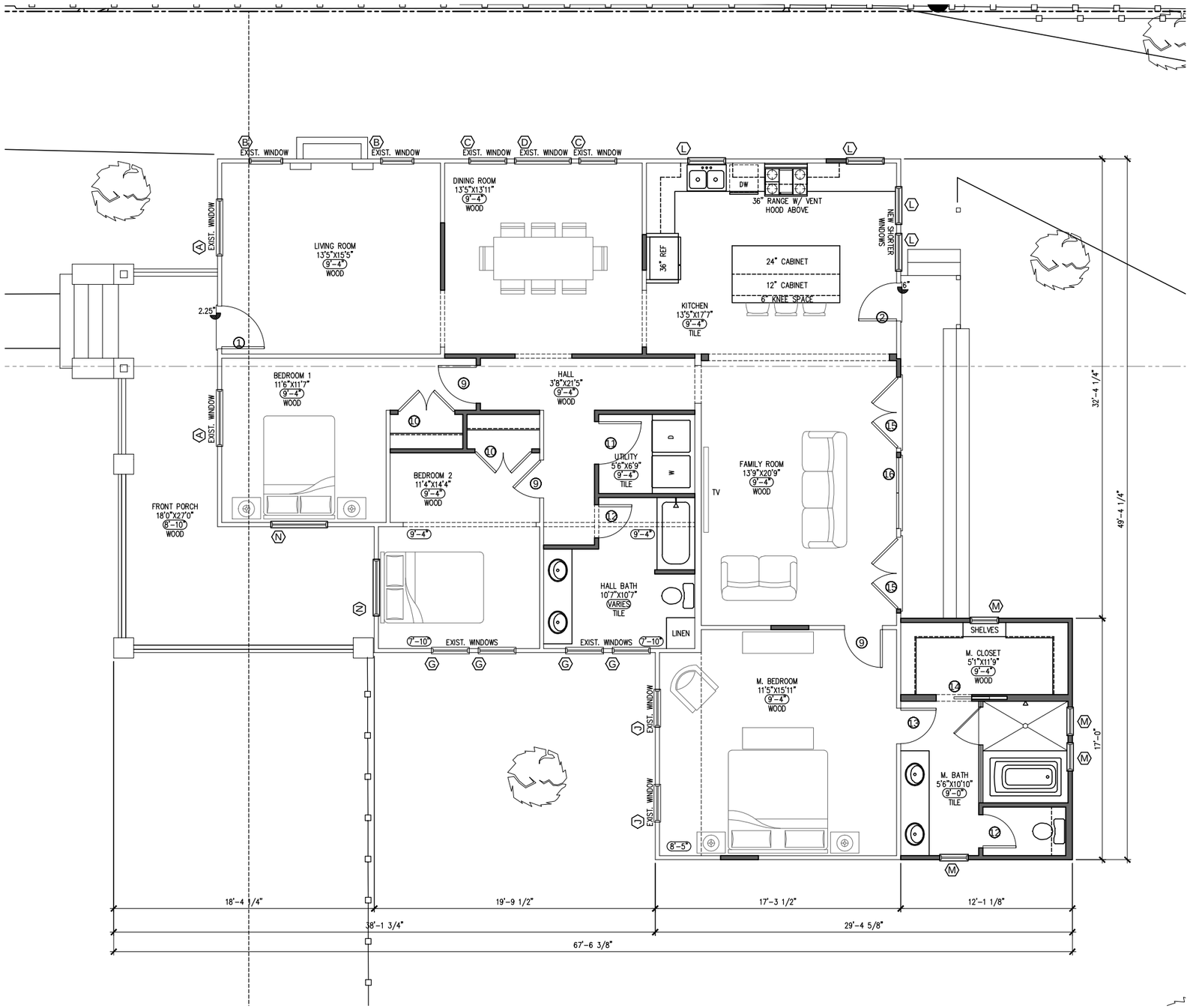

Square Footage:

EXISTING		NEW		TOTAL	
LEVEL ONE	2,020 (-193) S.F.	LEVEL ONE	210 S.F.	LEVEL ONE	2,037 S.F.
TOTAL AC	2,020 (-193) S.F.			TOTAL AC	2,037 S.F.
FRONT PORCH	91 S.F.	FRONT PORCH	193 S.F.	FRONT PORCH	284 S.F.
SCREEN PORCH	248 (-248) S.F.				
TOTAL PORCHES	339 S.F.			TOTAL PORCHES	284 S.F.
GARAGE	500 S.F.			GARAGE	500 S.F.
GARAGE APT	517 S.F.			GARAGE APT	517 S.F.
TOTAL COVERED	3,376 (-193) S.F.	TOTAL ADDITION	403 S.F.	TOTAL COVERED	3,338 S.F.

WALL LEGEND

NEW WALLS

EXISTING WALLS

N

06.16.16

3320 BEAUCHAMP ST.

GEHMAN RESIDENCE

PROPOSED FIRST FLOOR PLAN

SCALE: 1/8" = 1'-0"

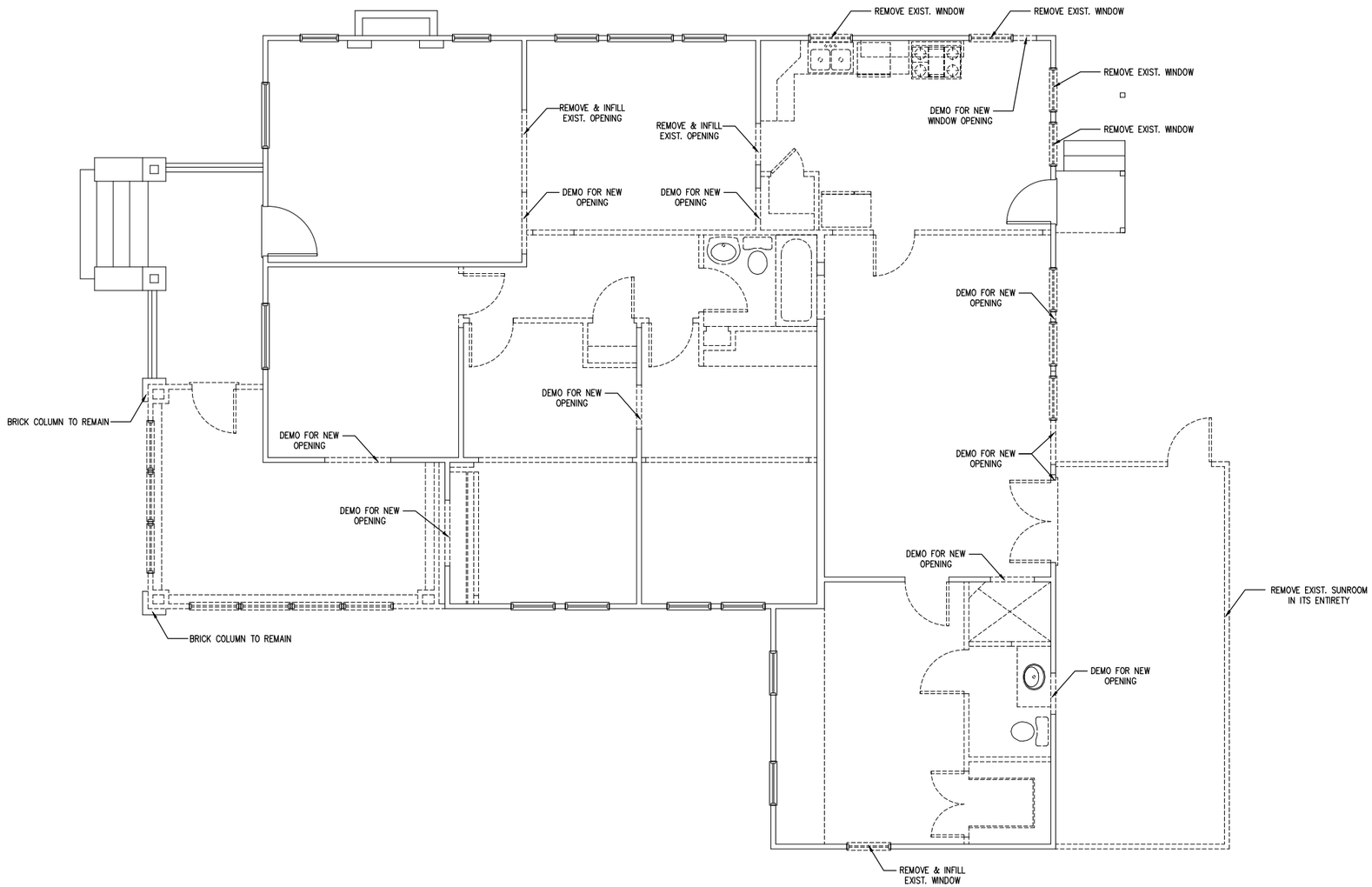

LEGEND

EXISTING TO REMAIN

DEMO

NOTE:
CONTRACTOR TO FIELD VERIFY THE EXTENT OF DEMOLITION AS IT PERTAINS TO CONSTRUCTABILITY. REPAIR OR REPLACE ALL EXISTING WINDOWS AS NEEDED (FIELD VERIFY)

N

06.16.16

3320 BEAUCHAMP ST.

GEHMAN RESIDENCE

FIRST FLOOR DEMO PLAN

SCALE: 1/8" = 1'-0"

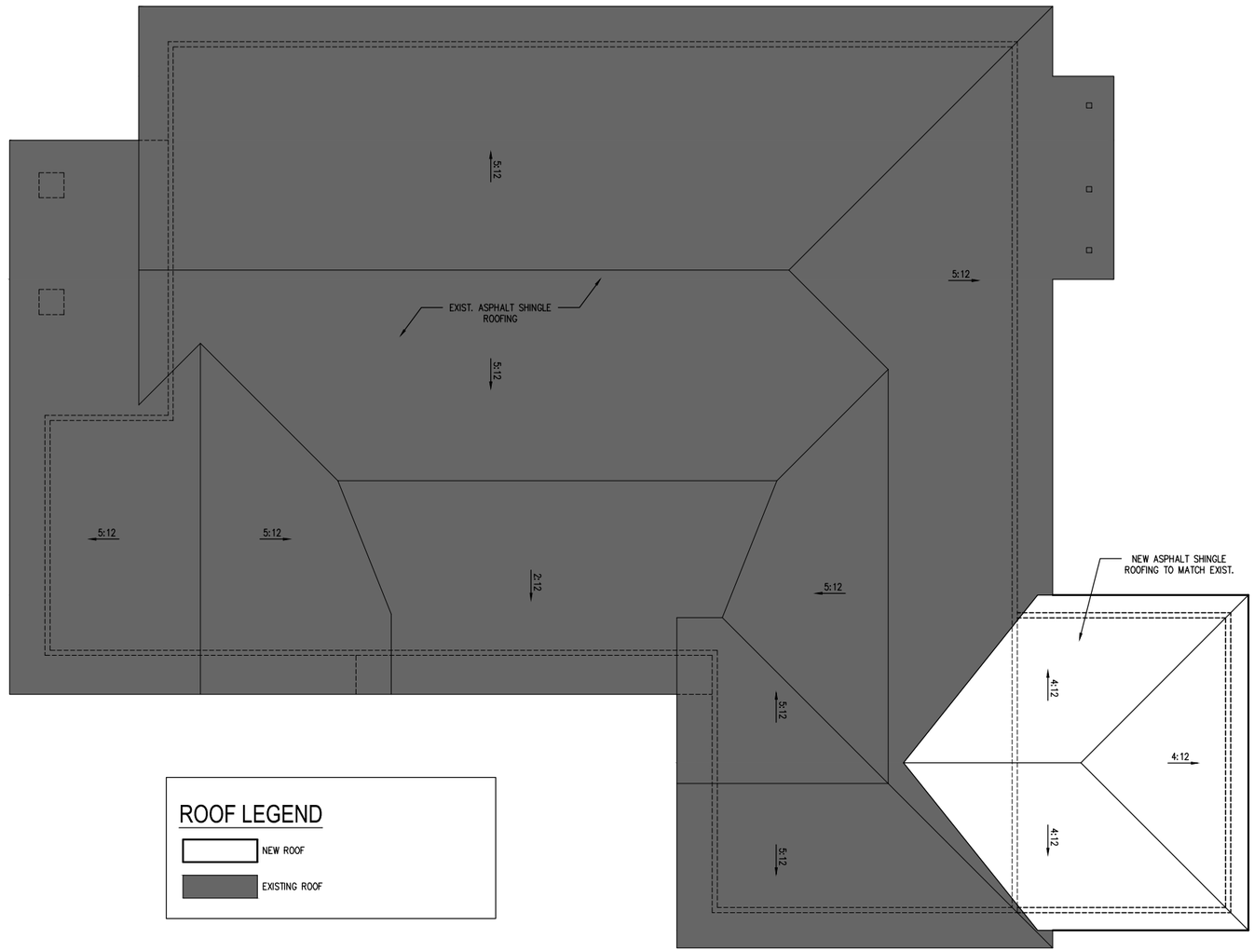

PROPOSED ROOF PLAN

SCALE: 1/8" = 1'-0"

N

06.16.16

3320 BEAUCHAMP ST.

GEHMAN RESIDENCE

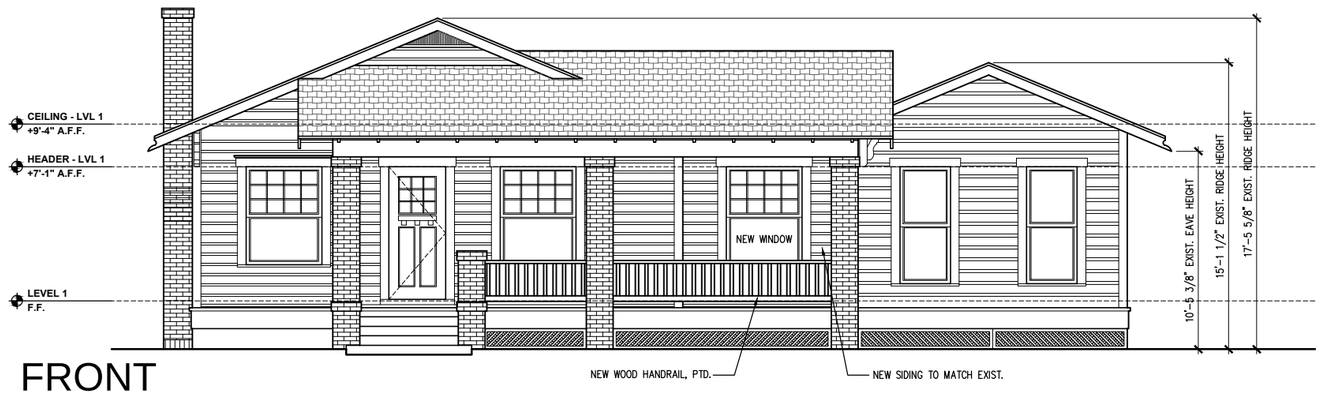

FRONT

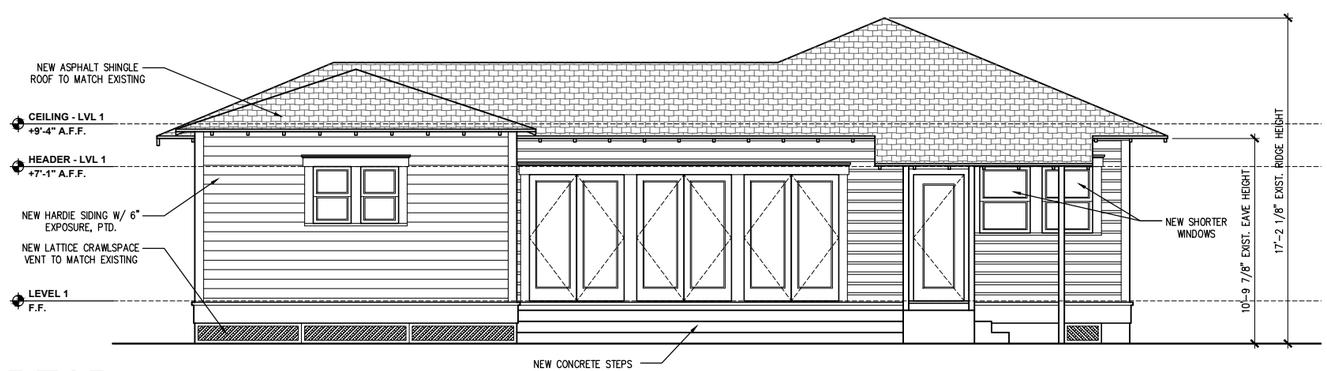

REAR

06.16.16

3320 BEAUCHAMP ST.

GEHMAN RESIDENCE

PROPOSED ELEVATIONS

SCALE: 1/8" = 1'-0"

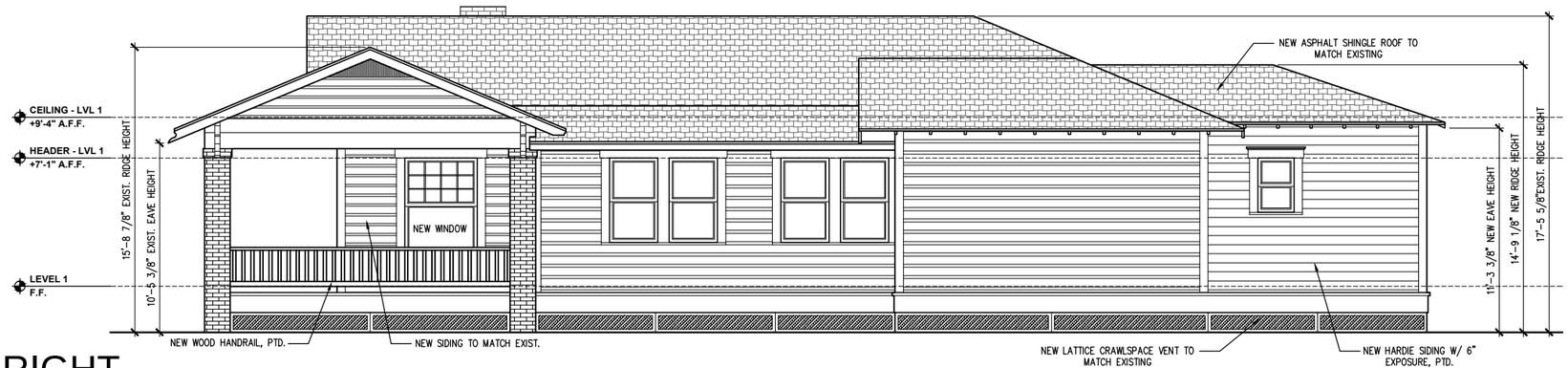

RIGHT

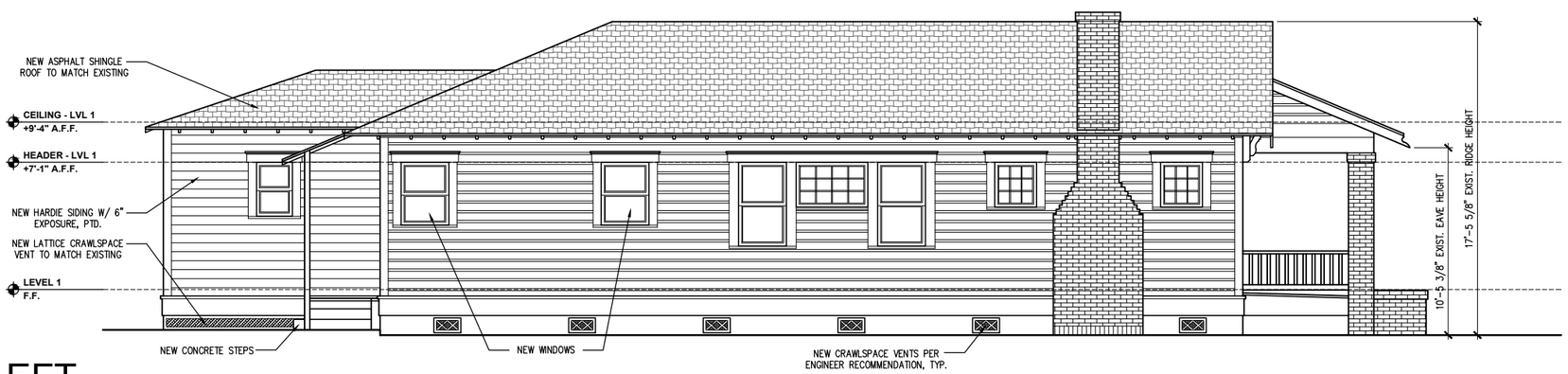

LEFT

06.16.16

3320 BEAUCHAMP ST.

GEHMAN RESIDENCE

PROPOSED ELEVATIONS

SCALE: 1/8" = 1'-0"

WINDOW SCHEDULE

MARK	QTY	WIDTH	HEIGHT	TYPE	WALL	DESCRIPTION
A	2	4'-0"	5'-2"	SINGLE HUNG	2X4	EXIST. WINDOW TO REMAIN. LIVING ROOM.
B	2	2'-4"	2'-6"	FIXED	2X4	EXIST. WINDOW TO REMAIN. LIVING ROOM.
C	2	2'-6"	5'-2"	SINGLE HUNG	2X4	EXIST. WINDOW TO REMAIN. LIVING ROOM.
D	1	4'-0"	2'-6"	FIXED	2X4	EXIST. WINDOW TO REMAIN. DINING ROOM.
E	1	2'-8"	3'-6"	SINGLE HUNG	2X4	EXIST. NON-ORIGINAL WINDOW TO BE REMOVED. KITCHEN.
F	1	2'-8"	4'-6"	SINGLE HUNG	2X4	EXIST. NON-ORIGINAL WINDOW TO BE REMOVED. KITCHEN.
G	9	2'-8"	5'-2"	SINGLE HUNG	2X4	5 EXIST. NON-ORIGINAL WINDOWS TO BE REMOVED. 4 EXIST. WINDOWS TO REMAIN. KITCHEN, FAMILY, BEDROOM 2, BEDROOM 3
H	1	2'-8"	4'-8"	SINGLE HUNG	2X4	EXIST. NON-ORIGINAL WINDOW TO BE REMOVED. M. BEDROOM.
J	2	2'-8"	6'-2"	SINGLE HUNG	2X4	EXIST. WINDOW TO REMAIN. M. BEDROOM.
K	7	3'-0"	4'-0"	AWNING	2X4	7 EXIST. NON-ORIGINAL WINDOWS TO BE REMOVED. OFFICE.
L	4	2'-8"	3'-6"	SINGLE HUNG	2X4	NEW WOOD WINDOW. KITCHEN.
M	4	2'-0"	3'-0"	SINGLE HUNG	2X4	NEW WOOD WINDOW. MASTER CLOSET, MASTER BATH.
N	2	4'-0"	5'-2"	SINGLE HUNG	2X4	NEW WOOD WINDOW. BEDROOM 1, BEDROOM 2.

DOOR SCHEDULE

MARK	QTY	WIDTH	HEIGHT	TYPE	WALL	DESCRIPTION
1	1	3'-0"	7'-0"	EXTERIOR	2X4	EXIST. DOOR TO REMAIN. LIVING ROOM.
2	1	2'-8"	6'-8"	EXTERIOR	2X4	EXIST. DOOR TO REMAIN. KITCHEN.
3	1	(2)2'-6"	6'-8"	EXTERIOR	2X4	EXIST. NON-ORIGINAL DOOR TO BE REMOVED. FAMILY ROOM.
4	1	2'-8"	6'-8"	EXTERIOR	2X4	EXIST. NON-ORIGINAL DOOR TO BE REMOVED. OFFICE.
5	3	2'-6"	6'-8"	INTERIOR	2X4	3 EXIST. DOORS TO BE REMOVED. BEDROOM 1, HALL, FAMILY
6	5	2'-8"	6'-8"	INTERIOR	2X4	5 EXIST. DOORS TO BE REMOVED. BEDROOM 2, BEDROOM 3, HALL BATH, MASTER BEDROOM, MASTER BATH.
7	1	2'-0"	6'-8"	INTERIOR	2X4	EXIST. DOOR TO BE REMOVED. KITCHEN.
8	1	(2)2'-0"	6'-8"	INTERIOR	2X4	EXIST. DOOR TO BE REMOVED. MASTER CLOSET.
9	3	2'-8"	6'-8"	INTERIOR	2X4	NEW DOOR. BEDROOM 1, BEDROOM 2, MASTER BEDROOM.
10	2	(2)2'-0"	6'-8"	INTERIOR	2X4	NEW DOOR. HALL BATH, MASTER BATH.
11	1	3'-0"	6'-8"	INTERIOR	2X4	NEW DOOR. UTILITY.
12	2	2'-4"	6'-8"	INTERIOR	2X4	NEW DOOR. HALL BATH, MASTER BATH.
13	1	2'-6"	6'-8"	INTERIOR	2X4	NEW DOOR. MASTER BATH.
14	1	2'-6"	6'-8"	INT POCKET	2X6	NEW DOOR. MASTER CLOSET.
15	2	(2)2'-6"	6'-8"	EXTERIOR	2X4	NEW DOORS. FAMILY ROOM.
16	1	(2)2'-6"	6'-8"	EXTERIOR	2X4	NEW FIXED DOORS. FAMILY ROOM.

06.16.16

3320 BEAUCHAMP ST.

GEHMAN RESIDENCE

DOOR AND WINDOW SCHEDULE

SCALE: 1"=20'-0"

0 10 20 40

LEGEND:

- CHAIN LINK FENCE
- CONCRETE
- COVERED AREA
- WOOD FENCE
- POWER POLE
- SERVICE POLE
- SANITARY MANHOLE
- BENCHMARK

NORTH

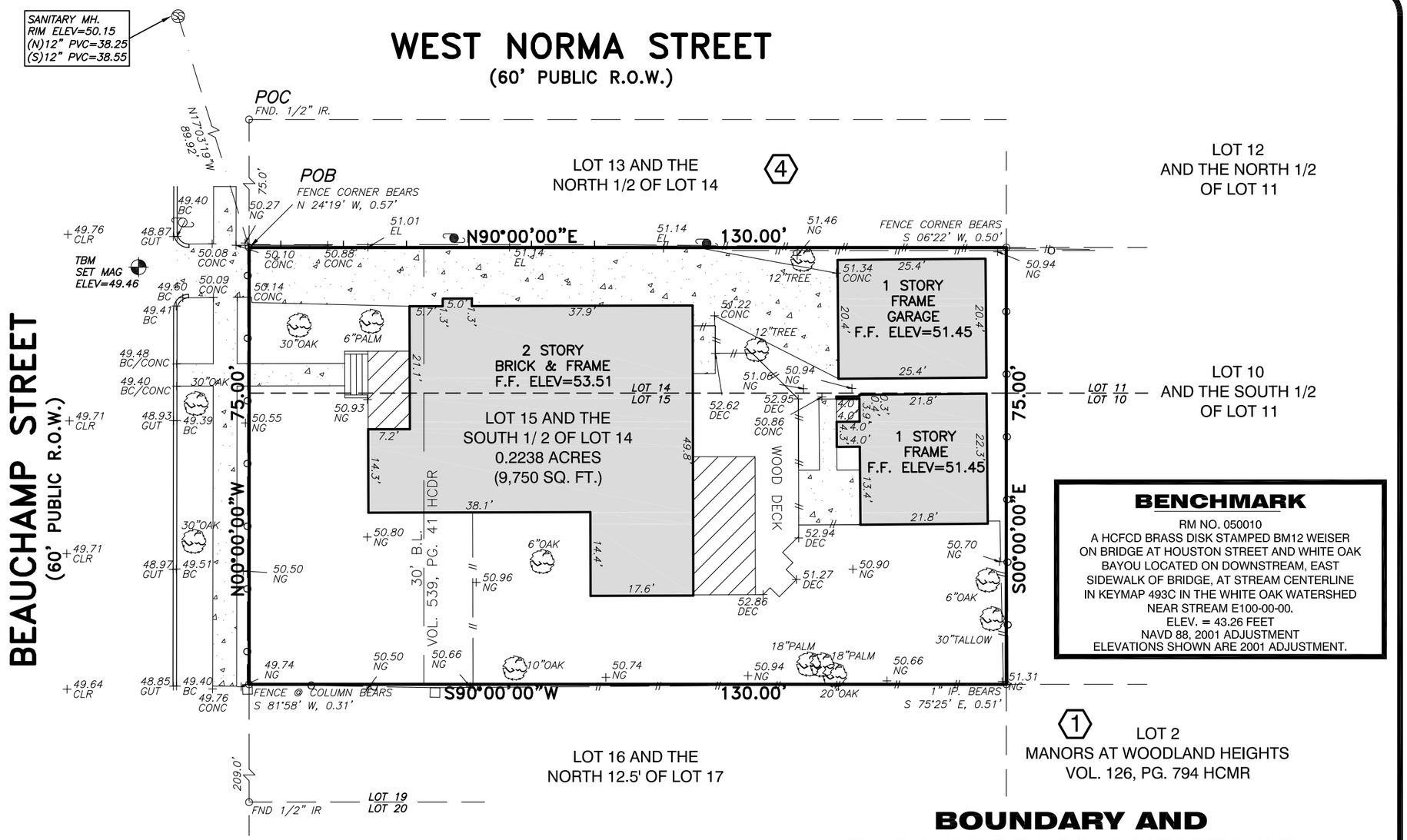

BENCHMARK

RM NO. 050010
A HCFCD BRASS DISK STAMPED BM12 WEISER ON BRIDGE AT HOUSTON STREET AND WHITE OAK BAYOU LOCATED ON DOWNSTREAM, EAST SIDEWALK OF BRIDGE, AT STREAM CENTERLINE IN KEYMAP 493C IN THE WHITE OAK WATERSHED NEAR STREAM E100-00-00.
ELEV. = 43.26 FEET
NAVD 88, 2001 ADJUSTMENT
ELEVATIONS SHOWN ARE 2001 ADJUSTMENT.

LEGAL DESCRIPTION

A TRACT OF LAND CONTAINING 0.2238 ACRES (9,750 SQUARE FEET) BEING LOT 15, AND THE ADJOINING SOUTH 1/2 OF LOT 14, BLOCK 4, OF WOODLAND HEIGHTS, A SUBDIVISION IN HARRIS COUNTY, TEXAS, ACCORDING TO THE MAP OR PLAT THEREOF RECORDED IN VOLUME 2, PAGE 33, OF THE MAP RECORDS OF HARRIS COUNTY, TEXAS AND BEING MORE PARTICULARLY DESCRIBED BY MEETS AND BOUNDS AS FOLLOWS; (BEAIRNG BASIS IS THE EAST RIGHT-OF-WAY LINE OF BEAUCHAMP STREET BEING NORTH 00 DEGREES 00 MINUTES 00 SECONDS WEST)

COMMENCING AT A 1/2 INCH IRON ROD FOUND IN THE SOUTH RIGHT-OF-WAY LINE OF WEST NORMA STREET (60 FOOT RIGHT-OF-WAY),THE EAST RIGHT-OF-WAY LINE OF BEAUCHAMP STREET (60 FOOT RIGHT-OF-WAY) AND BEING THE NORTHWEST CORNER OF LOT 13, BLOCK 4 OF THE SAID WOODLANDS HEIGHTS SUBDIVISION.

THENCE, SOUTH 00 DEGREES 00 MINUTES 00 SECONDS EAST ALONG THE SAID BEAUCHAMP STREET, A DISTANCE OF 75.00 FEET TO A FENCE CORNER THAT BEARS NORTH 24 DEGREES 19 MINUTES WEST, A DISTANCE OF 0.57 FEET TO THE POINT OF BEGINNING AND BEING THE NO HEREIN DESCRIBED TRACT

THENCE, NORTH 90 DEGREES 00 MINUTES 00 SECONDS EAST ALONG THE NORTH LINE OF HEREIN DESCRIBED TRACT, A DISTANCE OF 130.00 FEET TO A POINT WHICH A FENCE CORNER BEARS SOUTH 06 DEGREES 22 MINUTES WEST IN THE NORTHEAST CORNER OF LOT 10 OF THE SAID WOODLAND HEIGHTS SUBDIVISION AND BEING THE NORTHEAST CORNER OF HEREIN DESCRIBED TRACT;

THENCE, SOUTH 00 DEGREES 00 MINUTES 00 SECONDS EAST, A DISTANCE OF 75.00 FEET TO A POINT WHICH A 1 INCH IRON PIPE BEARS SOUTH 75 DEGREES 25 MINUTES EAST, A DISTANCE OF 0.51 FOR THE NORTHEAST CORNER OF LOT 2, BLOCK 1 OF THE MANORS AT WOODLANDS HEIGHTS SUBDIVISION RECORDED UNDER VOLUME 126, PAGE 794 OF THE HARRIS COUNTY MAP RECORDS AND BEING THE SOUTHEAST CORNER OF HEREIN DESCRIBED TRACT;

THENCE, SOUTH 90 DEGREES 00 MINUTES 00 SECONDS WEST, ALONG THE NORTH LINE OF LOT 16 OF SAID WOODLAND HEIGHTS SUBDIVISION, A DISTANCE OF 130.00 FEET TO A POINT WHICH A FENCE CORNER BEARS SOUTH 81 DEGREES 58 MINUTES WEST, A DISTANCE OF 0.31 FEET IN THE EAST RIGHT-OF-WAY LINE OF SAID BEACHAMP STREET AND BEING THE SOUTHEAST CORNER OF HEREIN DESCRIBED TRACT;

THENCE, NORTH 00 DEGREES 00 MINUTES 00 WEST ALONG THE EAST RIGHT-OF-WAY LINE OF SAID BEAUCHAMP STREET, A DISTANCE OF 75.00 FEET TO THE POINT OF BEGINNING AND CONTAINING 0.2238 ACRES OF LAND MORE OR LESS.

NOTES:
1. BEARING BASIS IS THE EAST R.O.W. LINE OF BEAUCHAMP STREET BEING N 00°00'00" W.
2. SURVEYOR DID NOT ABSTRACT PROPERTY. SURVEY BASED ON LEGAL DESCRIPTIONS SUPPLIED BY TITLE COMPANY. EASEMENTS, BUILDING LINES, ETC., SHOWN ARE AS IDENTIFIED BY GF NO. 14201828 OF WESTCOR LAND TITLE INSURANCE COMPANY.
3. NOTHING IN THIS SURVEY IS INTENDED TO EXPRESS AN OPINION REGARDING OWNERSHIP OR TITLE.
4. THE WORD CERTIFY IS UNDERSTOOD TO BE AN EXPRESSION OF PROFESSIONAL JUDGMENT BY THE SURVEYOR, WHICH IS BASED ON HIS BEST KNOWLEDGE, INFORMATION AND BELIEF.
5. SURVEY IS CERTIFIED FOR THIS TRANSACTION ONLY.
6. THE FINDINGS AND OPINIONS OF SOUTH TEXAS SURVEYING ASSOCIATES, INC. REFLECTED HEREON ARE PRIVILEGED, CONFIDENTIAL AND INTENDED FOR THE USE OF THE INDIVIDUAL OR ENTITY FOR WHOM THIS WORK WAS PREPARED, IT IS UNDERSTOOD THAT THE USE OF, RELIANCE ON, OR REPRODUCTION OF SAME, IN WHOLE OR IN PART, BY OTHERS WITHOUT THE EXPRESS WRITTEN CONSENT OF SOUTH TEXAS SURVEYING ASSOCIATES, INC. IS PROHIBITED AND WITHOUT WARRANTY, EXPRESS OR IMPLIED. SOUTH TEXAS SURVEYING ASSOCIATES, INC. SHALL BE HELD HARMLESS AGAINST DAMAGES OR EXPENSES RESULTING FROM SUCH UNAUTHORIZED USE, RELIANCE OR REPRODUCTION. *COPYRIGHT 2016. ALL RIGHTS RESERVED.*

PROPERTY LIES WITHIN FLOOD ZONE "X", ACCORDING TO F.I.R.M. MAP NO. 48201C 0690M, DATE 6-9-14. BY GRAPHING PLOTTING ONLY, WE DO NOT ASSUME RESPONSIBILITY FOR EXACT DETERMINATION.
BEFORE ANY DEVELOPMENT PLANNING, DESIGN, OR CONSTRUCTION IS STARTED, THE COMMUNITY, CITY AND COUNTY IN WHICH SUBJECT TRACT EXISTS SHOULD BE CONTACTED. SAID ENTITIES MAY IMPOSE LARGER FLOOD PLAIN AND FLOODWAY AREAS THAN SHOWN BY F.I.R.M. MAPS THAT WILL AFFECT DEVELOPMENT.

SURVEYOR'S CERTIFICATION

PROPERTY SUBJECT TO CITY ORDINANCES AND SUBDIVISION COVENANTS, CONDITIONS AND RESTRICTIONS.
I hereby certify that this survey was made on the ground and that this plat correctly represents the facts found at the time of survey showing any improvements, from legal descriptions supplied by client. There are no encroachments apparent on the ground, except as shown. This survey is only certified for boundary and this transaction only. Surveyor did not abstract property. Easements, building lines, etc. shown are as identified by:

GF 14201828 of WESTCOR LAND TITLE INSURANCE COMPANY.

STATE OF TEXAS REGISTERED FRED W. LAWTON 2321 PROFESSIONAL LAND SURVEYOR

Fred W. Lawton, Registered Professional Land Surveyor No. 2321

BOUNDARY AND TOPOGRAPHIC SURVEY OF

LOT 15, AND THE ADJOINING SOUTH 1/2 OF LOT 14, BLOCK 4, OF WOODLAND HEIGHTS, A SUBDIVISION IN HARRIS COUNTY, TEXAS, ACCORDING TO THE MAP OR PLAT THEREOF RECORDED IN VOLUME 2, PAGE 33, OF THE MAP RECORDS OF HARRIS COUNTY, TEXAS.

ADDRESS: 3320 BEAUCHAMP STREET HOUSTON, TEXAS 77009 *REVISION:*

JOB NO.: 747-16 SCALE: 1" = 20' DATE: 5-25-16

SOUTH TEXAS SURVEYING ASSOCIATES, INC.
11281 Richmond Ave. Bldg. J, Suite 101, Houston, Texas 77082
281-556-6918 FAX 281-556-9331
Firm Number: 10045400

Copyright 2016 South Texas Surveying Associates, Inc.

K:\COMRES 2016\747-16.DWG (JM)

JOB NO: 747-16

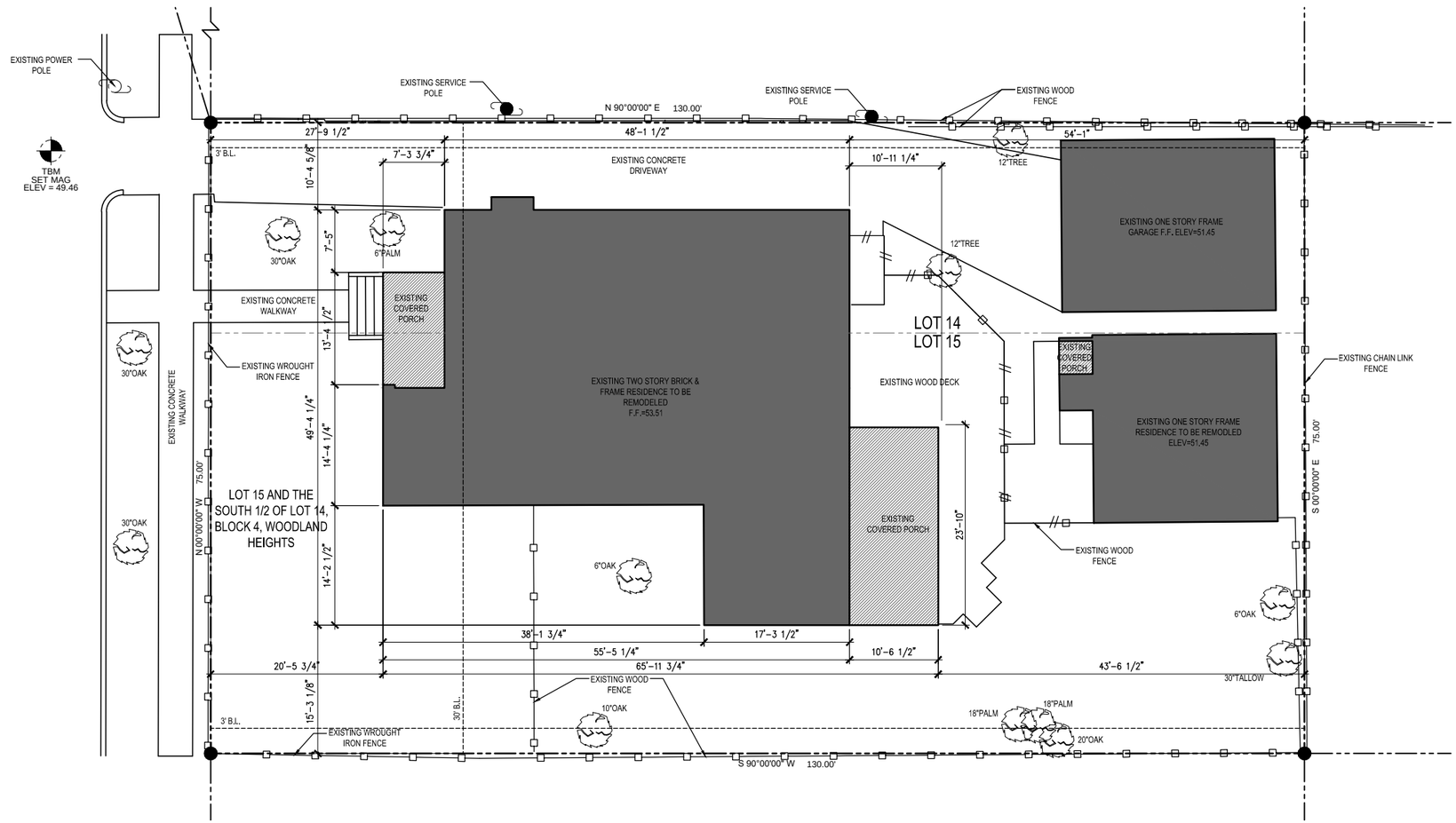

LEGEND

- EXISTING RESIDENCE
- EXISTING COVERED AREA

N

06.30.16

3320 BEAUCHAMP ST.

GEHMAN RESIDENCE

EXISTING SITE PLAN

SCALE: 1/16" = 1'-0"

Square Footage:

LOWER LEVEL	2,020 S.F.
TOTAL AC	2,020 S.F.
FRONT PORCH	91 S.F.
SCREEN PORCH	248 S.F.
TOTAL PORCHES	339 S.F.
GARAGE	500 S.F.
GARAGE APARTMENT	517 S.F.
TOTAL COVERED	3,376 S.F.

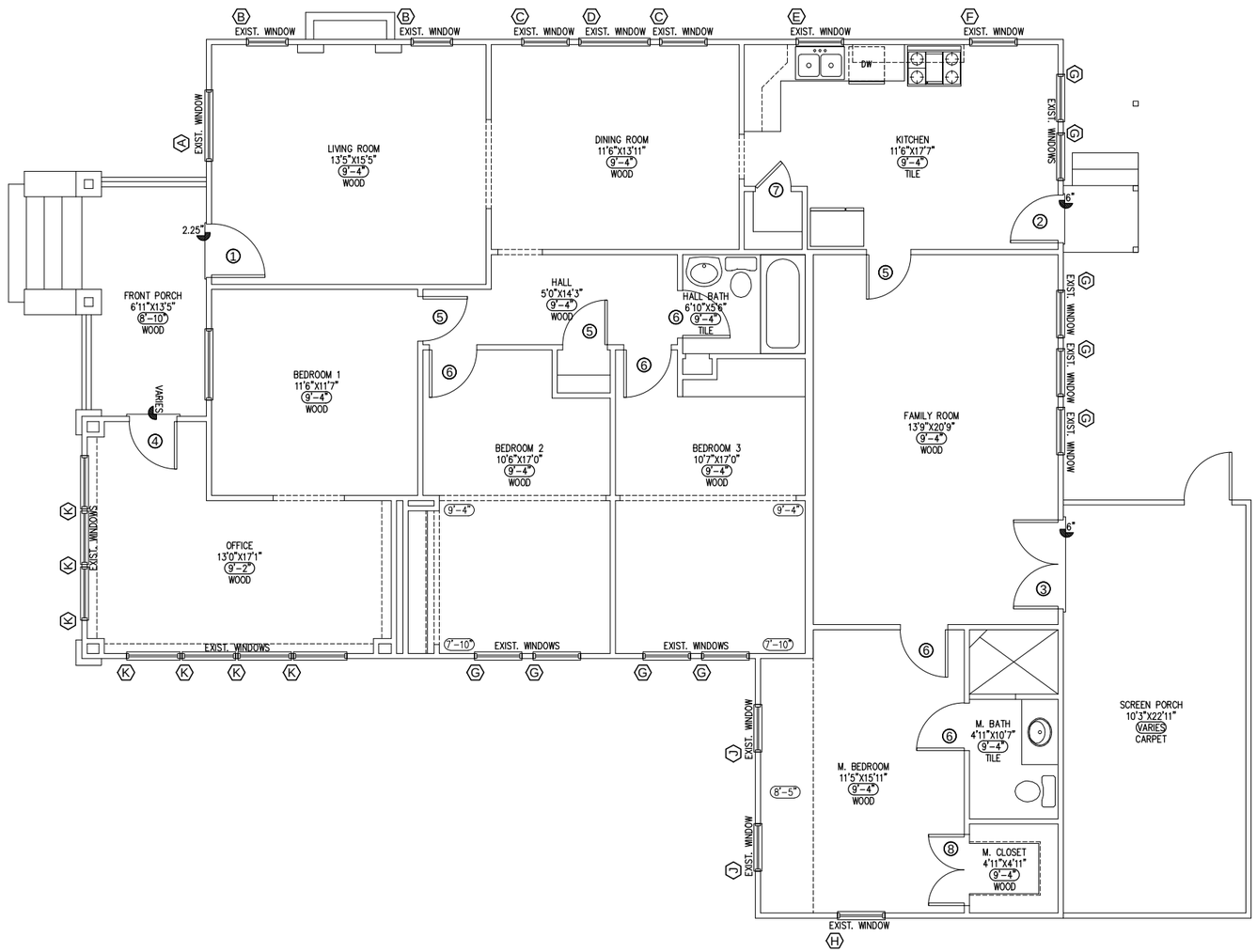

N

06.30.16

3320 BEAUCHAMP ST.

GEHMAN RESIDENCE

EXISTING FIRST FLOOR PLAN

SCALE: 1/8" = 1'-0"

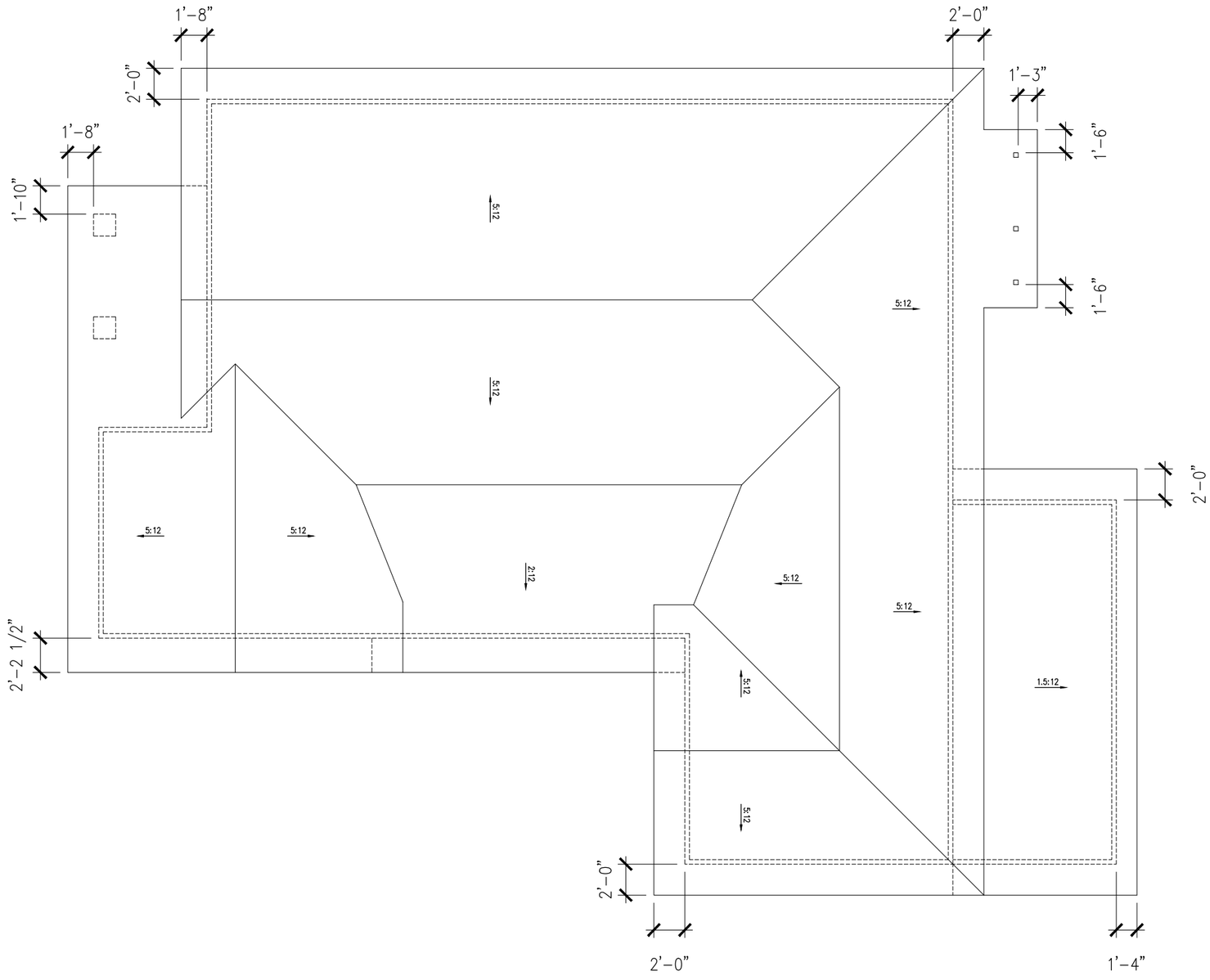

EXISTING ROOF PLAN

SCALE: 1/8" = 1'-0"

N

06.30.16

3320 BEAUCHAMP ST.

GEHMAN RESIDENCE

FRONT

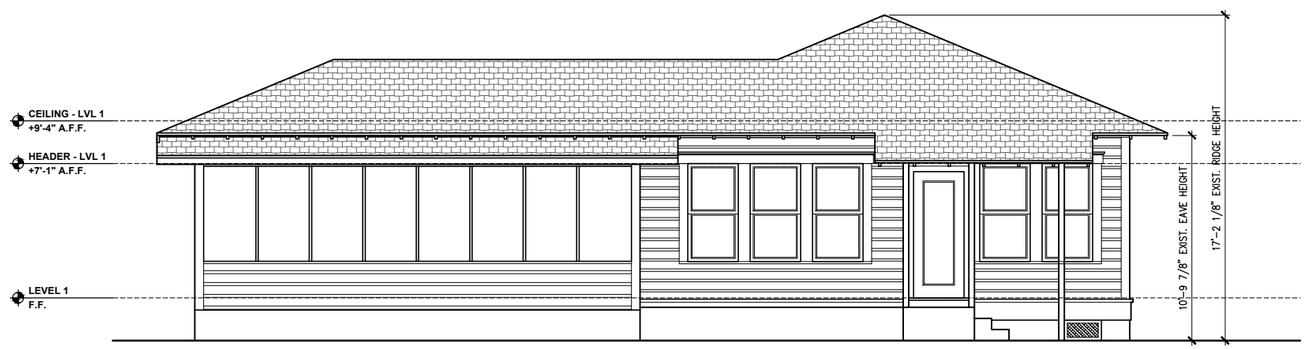

REAR

06.30.16

3320 BEAUCHAMP ST.

GEHMAN RESIDENCE

EXISTING ELEVATIONS

SCALE: 1/8" = 1'-0"

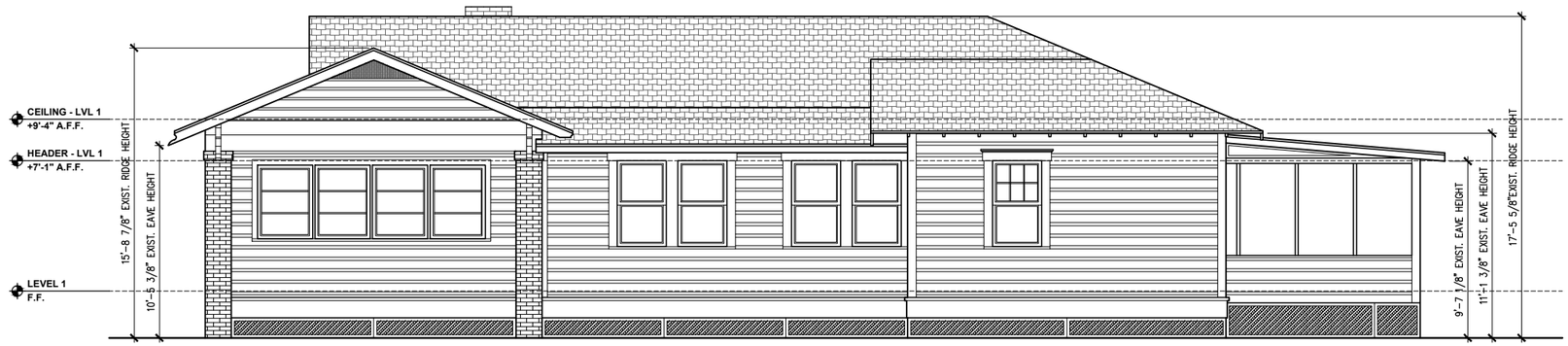

RIGHT

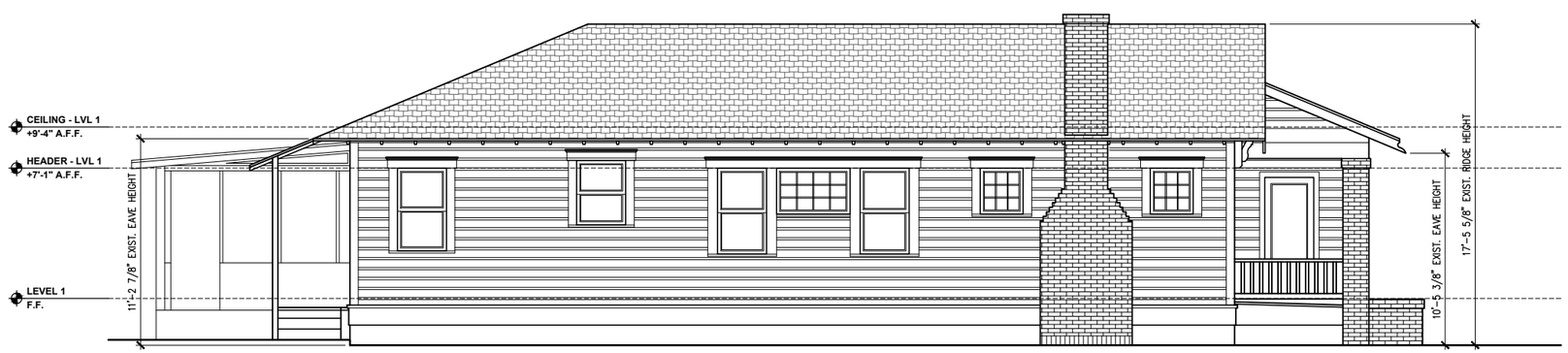

LEFT

06.30.16

3320 BEAUCHAMP ST.

GEHMAN RESIDENCE

EXISTING ELEVATIONS

SCALE: 1/8" = 1'-0"

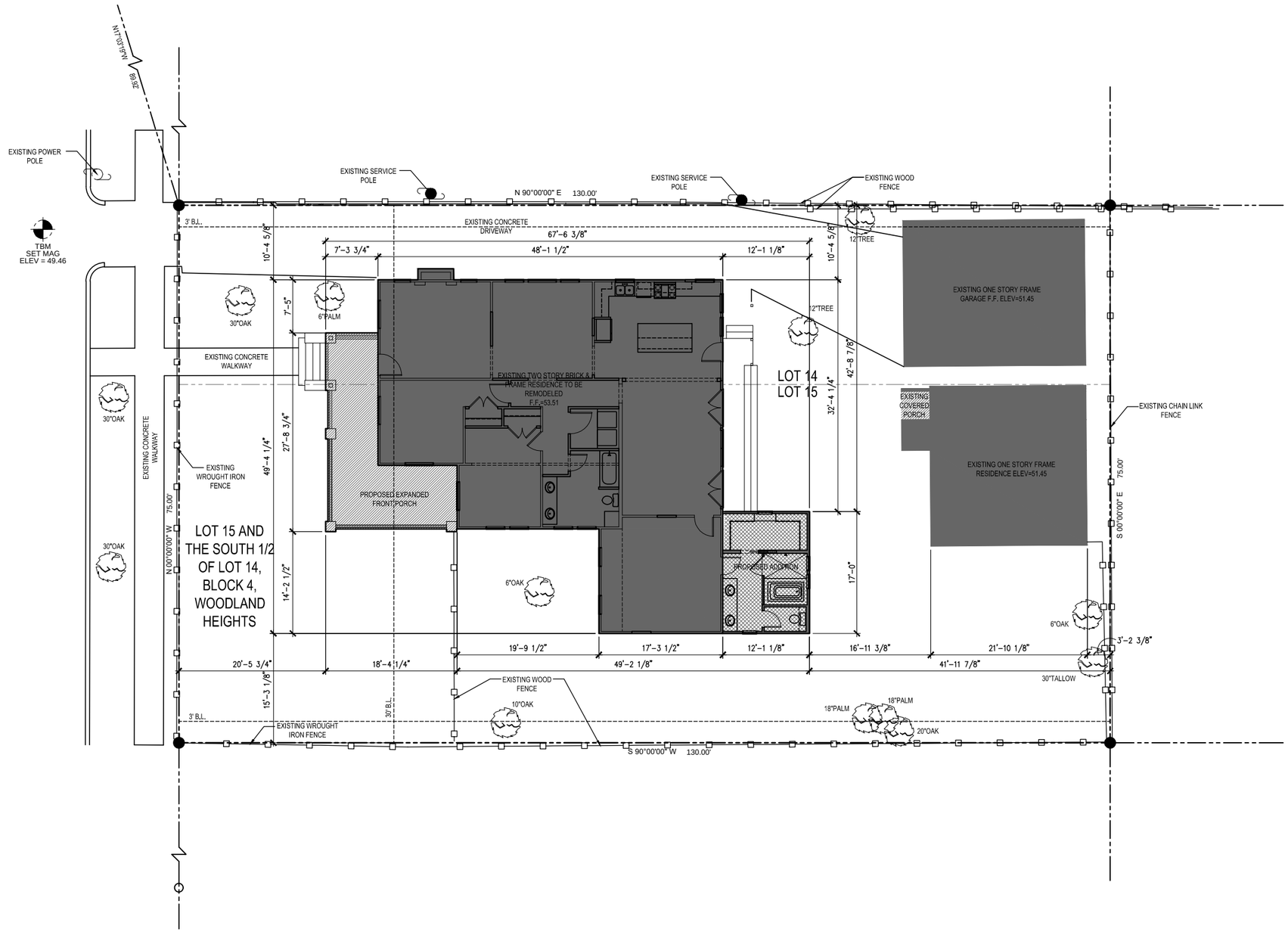

PROPOSED SITE PLAN

SCALE: 1/16" = 1'-0"

N

06.30.16

3320 BEAUCHAMP ST.

GEHMAN RESIDENCE

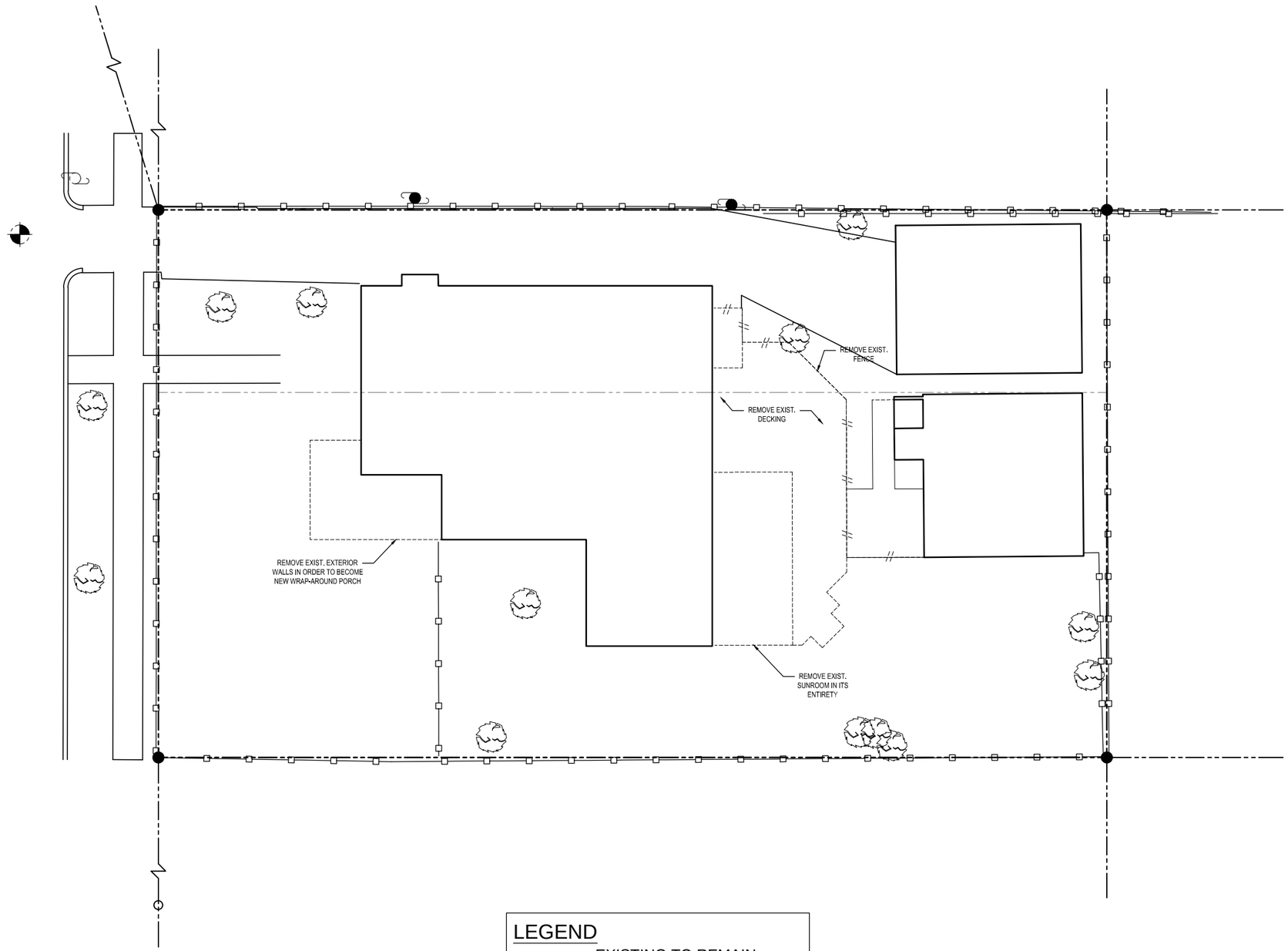

LEGEND

EXISTING TO REMAIN

DEMO

NOTE:
CONTRACTOR TO FIELD VERIFY THE EXTENT OF DEMOLITION AS IT PERTAINS TO CONSTRUCTABILITY.

N

06.30.16

3320 BEAUCHAMP ST.

GEHMAN RESIDENCE

DEMO SITE PLAN

SCALE: 1/16" = 1'-0"

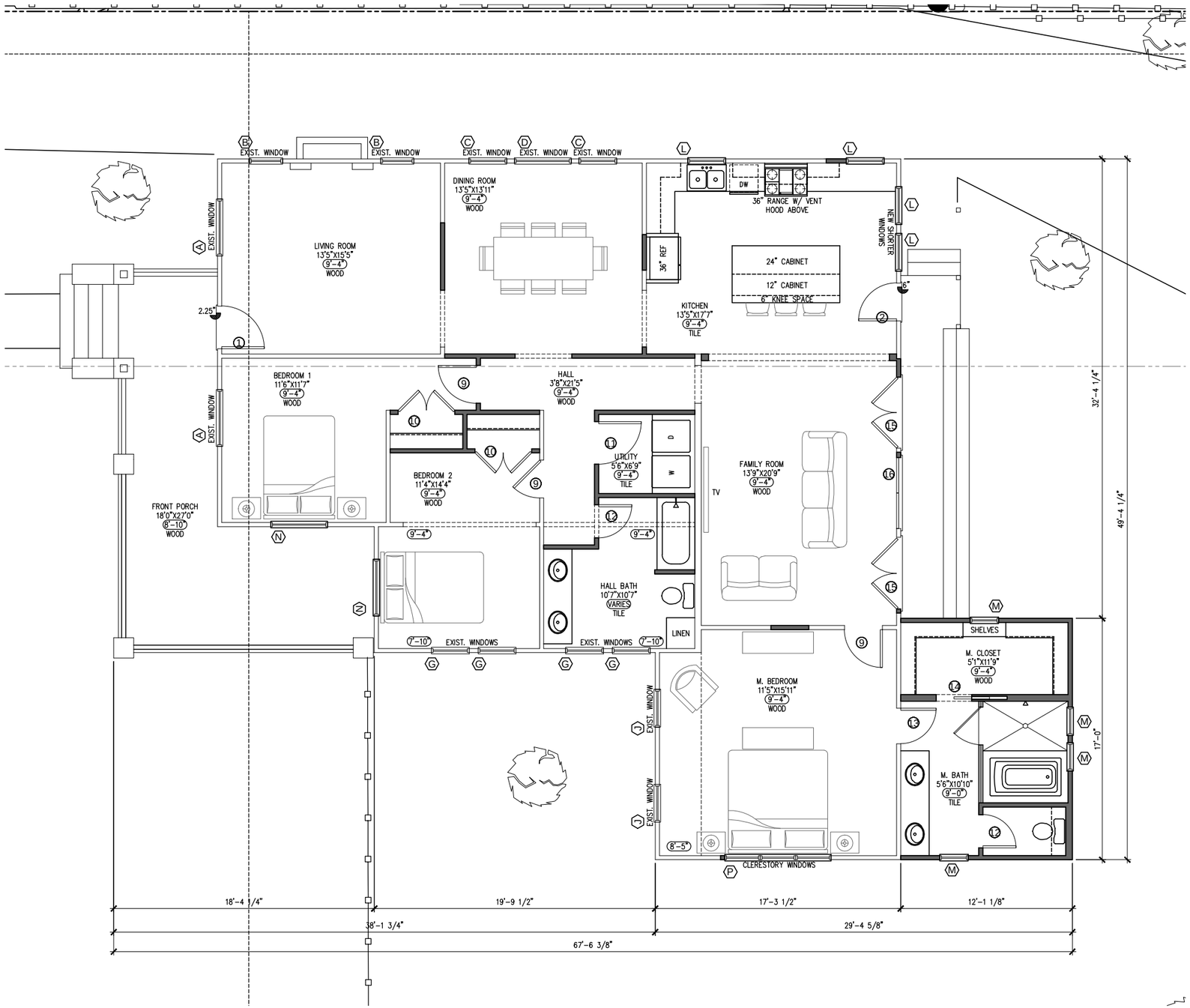

Square Footage:

EXISTING		NEW		TOTAL	
LEVEL ONE	2,020 (-193) S.F.	LEVEL ONE	210 S.F.	LEVEL ONE	2,037 S.F.
TOTAL AC	2,020 (-193) S.F.			TOTAL AC	2,037 S.F.
FRONT PORCH	91 S.F.	FRONT PORCH	193 S.F.	FRONT PORCH	284 S.F.
SCREEN PORCH	248 (-248) S.F.				
TOTAL PORCHES	339 S.F.			TOTAL PORCHES	284 S.F.
GARAGE	500 S.F.			GARAGE	500 S.F.
GARAGE APT	517 S.F.			GARAGE APT	517 S.F.
TOTAL COVERED	3,376 (-193) S.F.	TOTAL ADDITION	403 S.F.	TOTAL COVERED	3,338 S.F.

WALL LEGEND

NEW WALLS

EXISTING WALLS

N

06.30.16

3320 BEAUCHAMP ST.

GEHMAN RESIDENCE

PROPOSED FIRST FLOOR PLAN

SCALE: 1/8" = 1'-0"

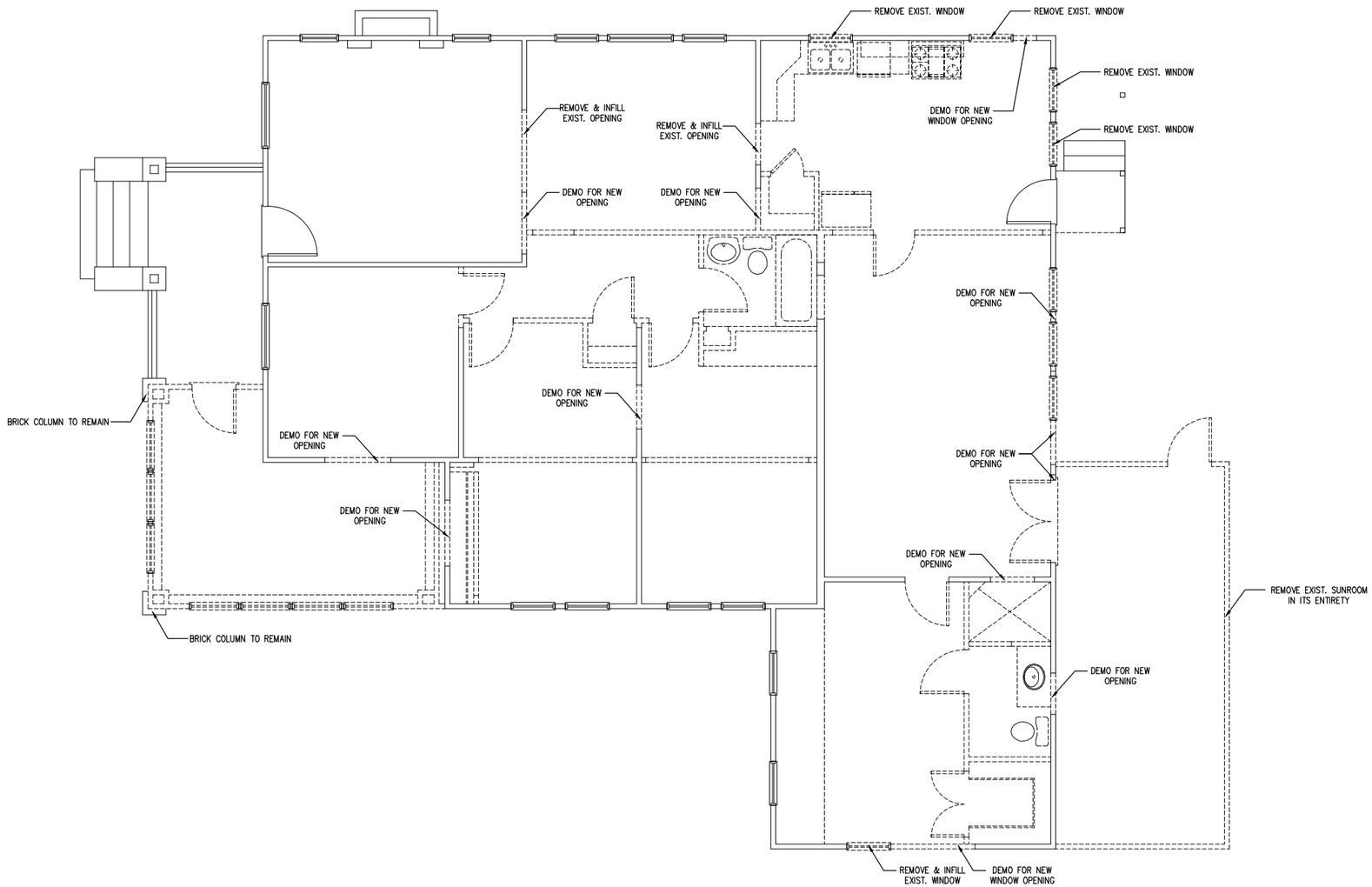

LEGEND

EXISTING TO REMAIN

DEMO

NOTE:
CONTRACTOR TO FIELD VERIFY THE EXTENT OF DEMOLITION AS IT PERTAINS TO CONSTRUCTABILITY. REPAIR OR REPLACE ALL EXISTING WINDOWS AS NEEDED (FIELD VERIFY)

N

06.30.16

3320 BEAUCHAMP ST.

GEHMAN RESIDENCE

FIRST FLOOR DEMO PLAN

SCALE: 1/8" = 1'-0"

EXISTING WINDOW SCHEDULE

MARK	MATERIAL	LITE PTRN	QTY	WIDTH	HEIGHT	STYLE	WALL	MOUNTING PROF	ORIG/REPLACE	EXIST. TO REMAIN	OTHER
A	WOOD	12/1	2	4'-0"	5'-2"	SINGLE HUNG	2X4	RECESSED	ORIGINAL	YES	LIVING ROOM.
B	WOOD	9 LITES	2	2'-4"	2'-6"	FIXED	2X4	RECESSED	ORIGINAL	YES	LIVING ROOM.
C	WOOD	1/1	2	2'-6"	5'-2"	SINGLE HUNG	2X4	RECESSED	ORIGINAL	YES	LIVING ROOM.
D	WOOD	12 LITES	1	4'-0"	2'-6"	FIXED	2X4	RECESSED	ORIGINAL	YES	DINING ROOM.
E	WOOD	1/1	1	2'-8"	3'-6"	SINGLE HUNG	2X4	RECESSED	NON-ORIGINAL	NO	EXIST. NON-ORIGINAL WINDOW TO BE REMOVED. KITCHEN.
F	WOOD	1/1	1	2'-8"	4'-6"	SINGLE HUNG	2X4	RECESSED	NON-ORIGINAL	NO	EXIST. NON-ORIGINAL WINDOW TO BE REMOVED. KITCHEN.
G	WOOD	1/1	9	2'-8"	5'-2"	SINGLE HUNG	2X4	RECESSED	NON-ORIGINAL	VARIES	5 EXIST. NON-ORIGINAL WINDOWS TO BE REMOVED. 4 EXIST. WINDOWS TO REMAIN. KITCHEN, FAMILY, BEDROOM 2, BEDROOM 3
H	WOOD	6/1	1	2'-8"	4'-8"	SINGLE HUNG	2X4	RECESSED	NON-ORIGINAL	NO	EXIST. NON-ORIGINAL WINDOW TO BE REMOVED. M. BEDROOM.
J	WOOD	1/1	2	2'-8"	6'-2"	SINGLE HUNG	2X4	RECESSED	ORIGINAL	YES	M. BEDROOM.
K	ALUMINUM	3 LITES	7	3'-0"	4'-0"	AWNING	2X4	RECESSED	NON-ORIGINAL	NO	7 EXIST. NON-ORIGINAL WINDOWS TO BE REMOVED. OFFICE.

PROPOSED WINDOW SCHEDULE

MARK	MATERIAL	LITE PTRN	QTY	WIDTH	HEIGHT	STYLE	WALL	MOUNTING PROF	BRAND OR EQ	EXIST. TO REMAIN	OTHER
L	WOOD	1/1	4	2'-8"	3'-6"	SINGLE HUNG	2X4	RECESSED	JELD-WEN	NO	KITCHEN.
M	WOOD	1/1	4	2'-0"	3'-0"	SINGLE HUNG	2X4	RECESSED	JELD-WEN	NO	MASTER CLOSET, MASTER BATH.
N	WOOD	12/1	2	4'-0"	5'-2"	SINGLE HUNG	2X4	RECESSED	JELD-WEN	NO	BEDROOM 1, BEDROOM 2.
P	WOOD		1	(3)2'-6"	1-'6"	FIXED	2X4	RECESSED	JELD-WEN	NO	MASTER BEDROOM

DOOR SCHEDULE

MARK	QTY	WIDTH	HEIGHT	TYPE	WALL	DESCRIPTION
1	1	3'-0"	7'-0"	EXTERIOR	2X4	EXIST. DOOR TO REMAIN. LIVING ROOM.
2	1	2'-8"	6'-8"	EXTERIOR	2X4	EXIST. DOOR TO REMAIN. KITCHEN.
3	1	(2)2'-6"	6'-8"	EXTERIOR	2X4	EXIST. NON-ORIGINAL DOOR TO BE REMOVED. FAMILY ROOM.
4	1	2'-8"	6'-8"	EXTERIOR	2X4	EXIST. NON-ORIGINAL DOOR TO BE REMOVED. OFFICE.
5	3	2'-6"	6'-8"	INTERIOR	2X4	3 EXIST. DOORS TO BE REMOVED. BEDROOM 1, HALL, FAMILY
6	5	2'-8"	6'-8"	INTERIOR	2X4	5 EXIST. DOORS TO BE REMOVED. BEDROOM 2, BEDROOM 3, HALL BATH, MASTER BEDROOM, MASTER BATH.
7	1	2'-0"	6'-8"	INTERIOR	2X4	EXIST. DOOR TO BE REMOVED. KITCHEN.
8	1	(2)2'-0"	6'-8"	INTERIOR	2X4	EXIST. DOOR TO BE REMOVED. MASTER CLOSET.
9	3	2'-8"	6'-8"	INTERIOR	2X4	NEW DOOR. BEDROOM 1, BEDROOM 2, MASTER BEDROOM.
10	2	(2)2'-0"	6'-8"	INTERIOR	2X4	NEW DOOR. HALL BATH, MASTER BATH.
11	1	3'-0"	6'-8"	INTERIOR	2X4	NEW DOOR. UTILITY.
12	2	2'-4"	6'-8"	INTERIOR	2X4	NEW DOOR. HALL BATH, MASTER BATH.
13	1	2'-6"	6'-8"	INTERIOR	2X4	NEW DOOR. MASTER BATH.
14	1	2'-6"	6'-8"	INT POCKET	2X6	NEW DOOR. MASTER CLOSET.
15	2	(2)2'-6"	6'-8"	EXTERIOR	2X4	NEW DOORS. FAMILY ROOM.
16	1	(2)2'-6"	6'-8"	EXTERIOR	2X4	NEW FIXED DOORS. FAMILY ROOM.

DOOR AND WINDOW SCHEDULE

06.30.16

3320 BEAUCHAMP ST.

GEHMAN RESIDENCE

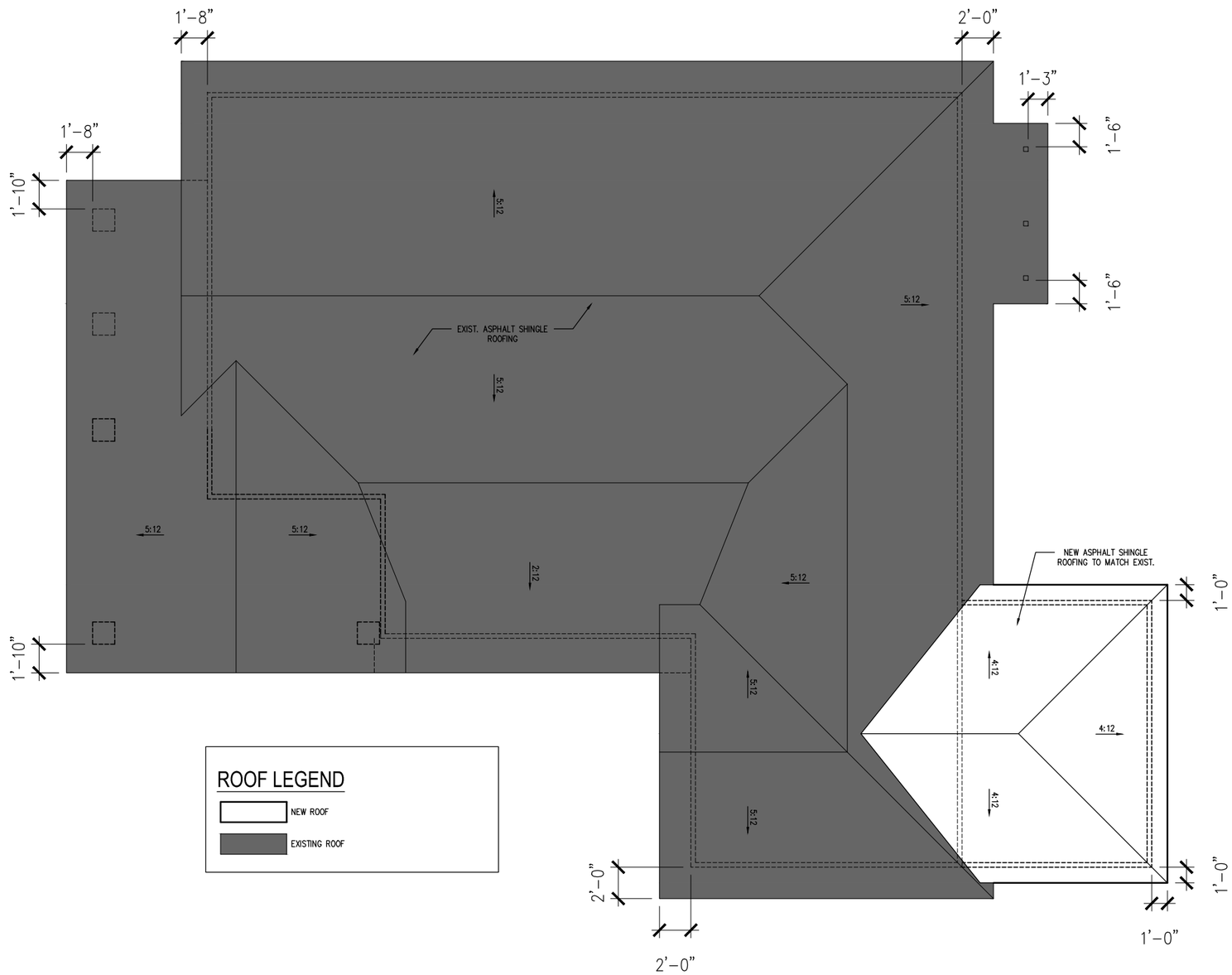

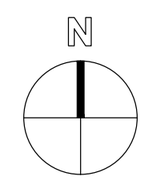

06.30.16

3320 BEAUCHAMP ST.

GEHMAN RESIDENCE

PROPOSED ROOF PLAN

SCALE: 1/8" = 1'-0"

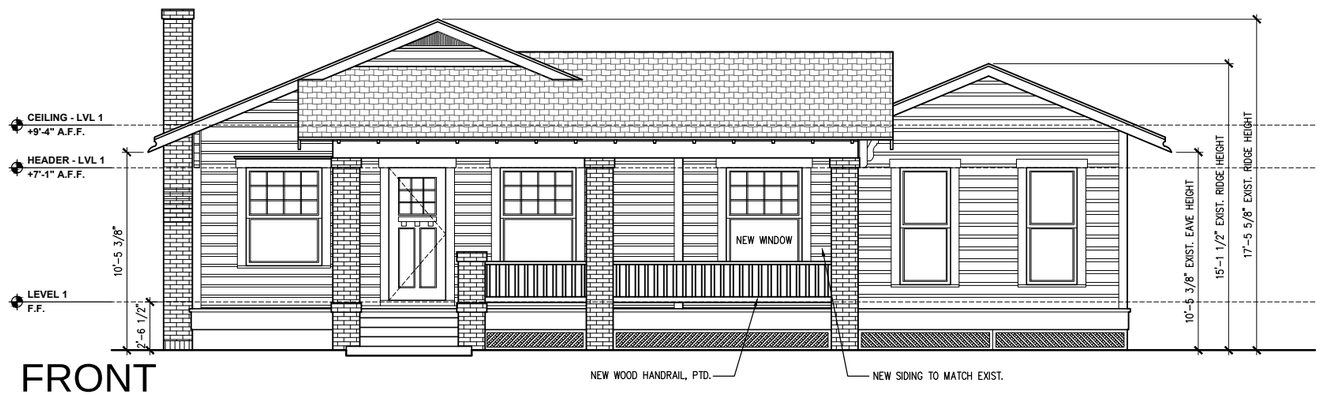

FRONT

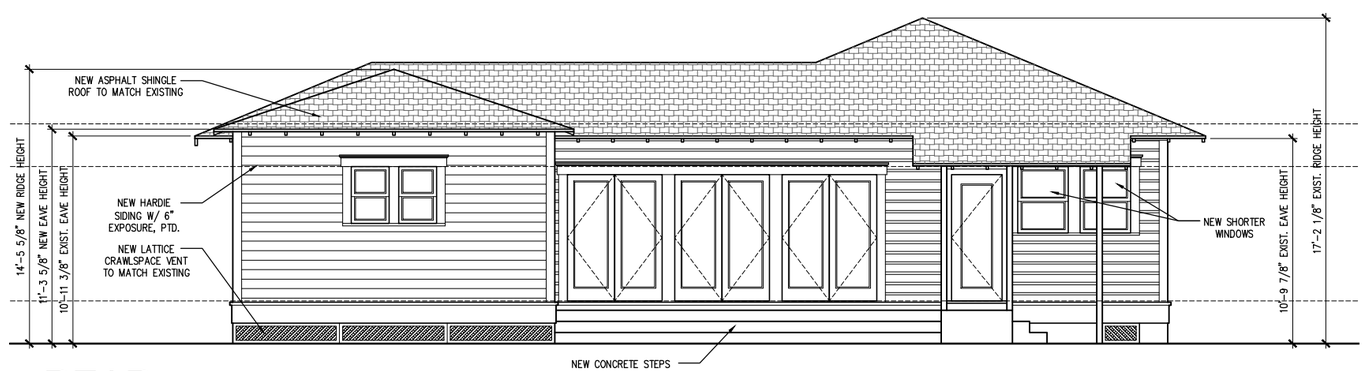

REAR

06.30.16

3320 BEAUCHAMP ST.

GEHMAN RESIDENCE

PROPOSED ELEVATIONS

SCALE: 1/8" = 1'-0"

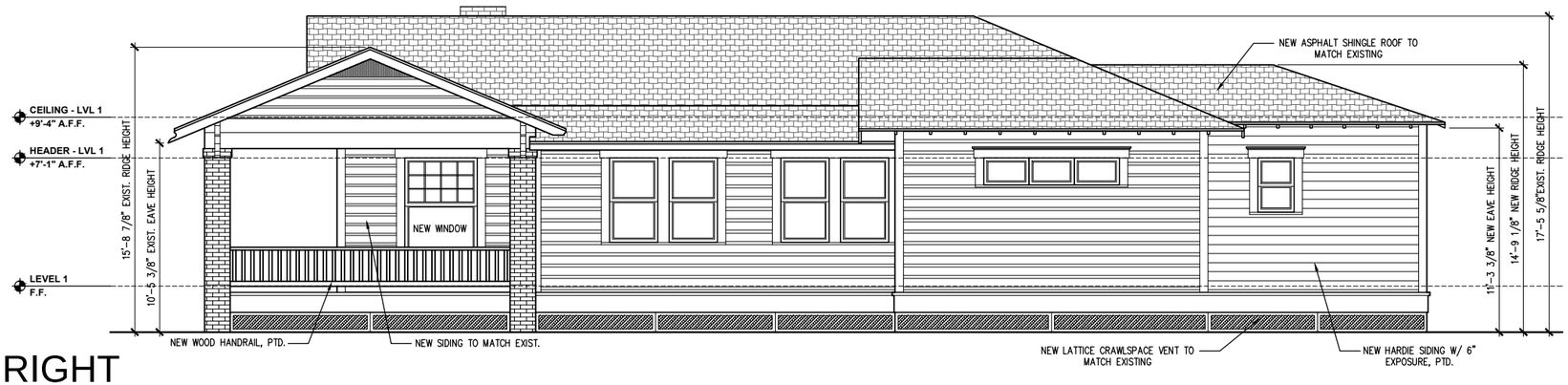

RIGHT

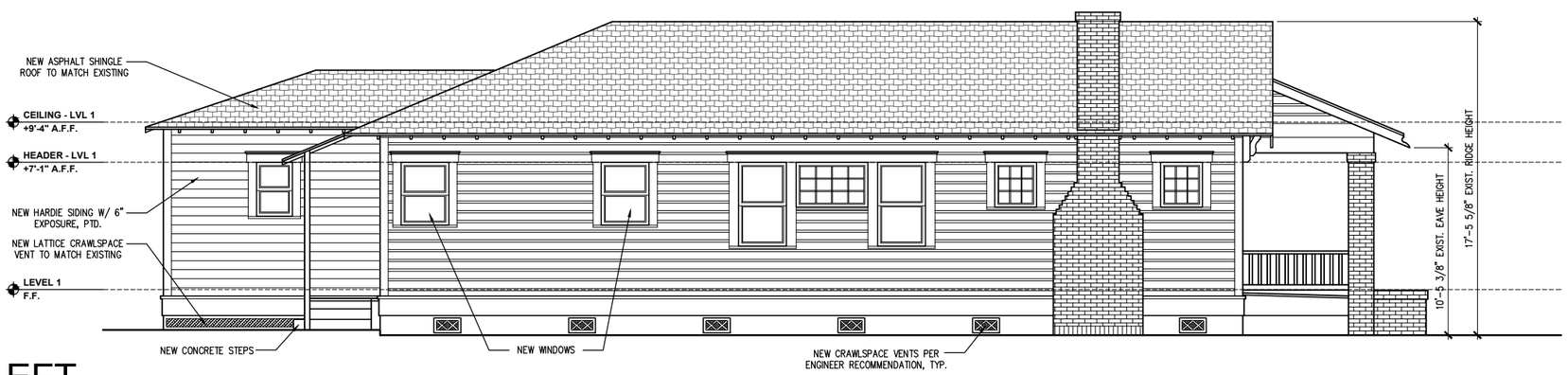

LEFT

06.30.16

3320 BEAUCHAMP ST.

GEHMAN RESIDENCE

PROPOSED ELEVATIONS
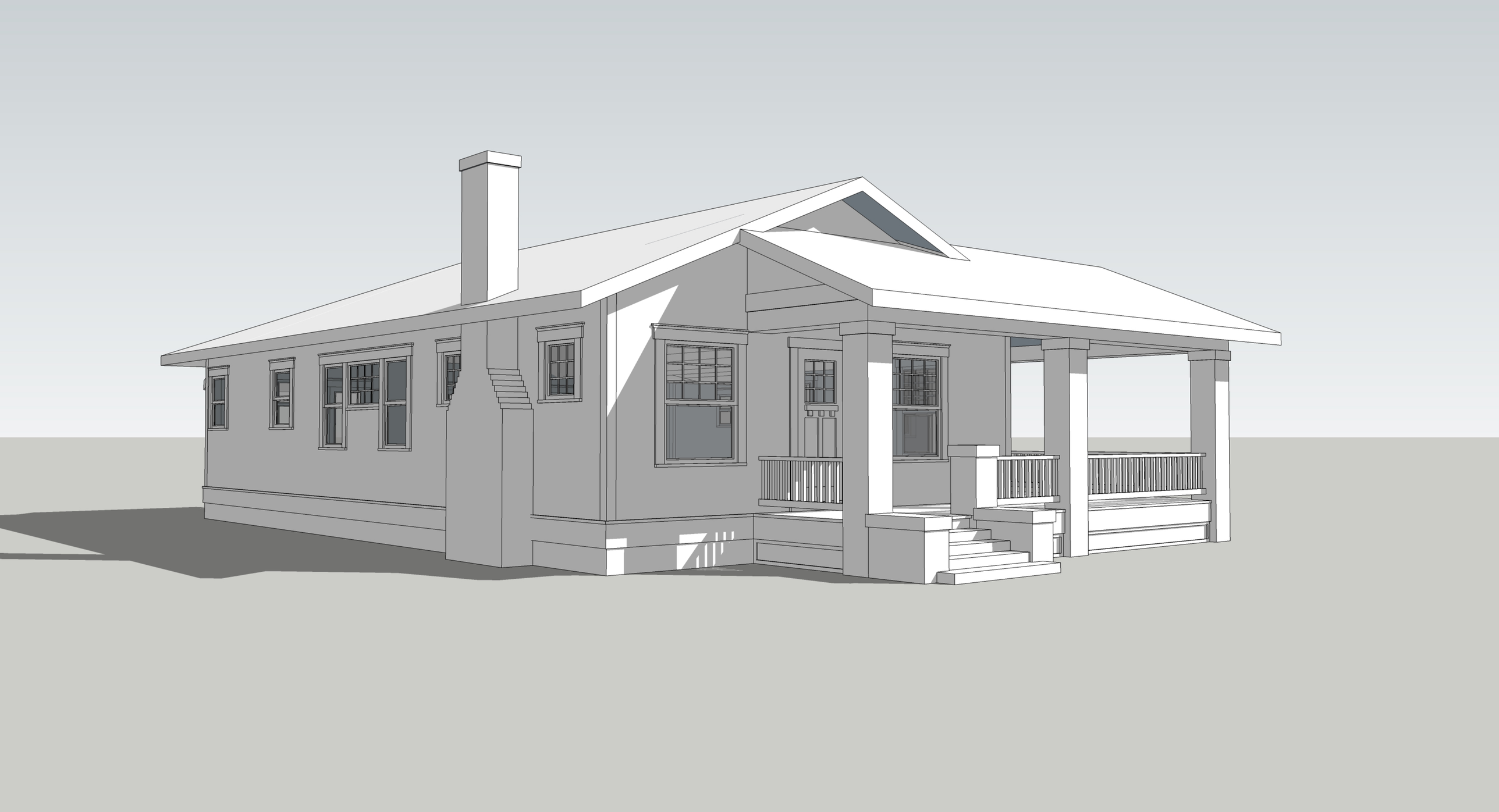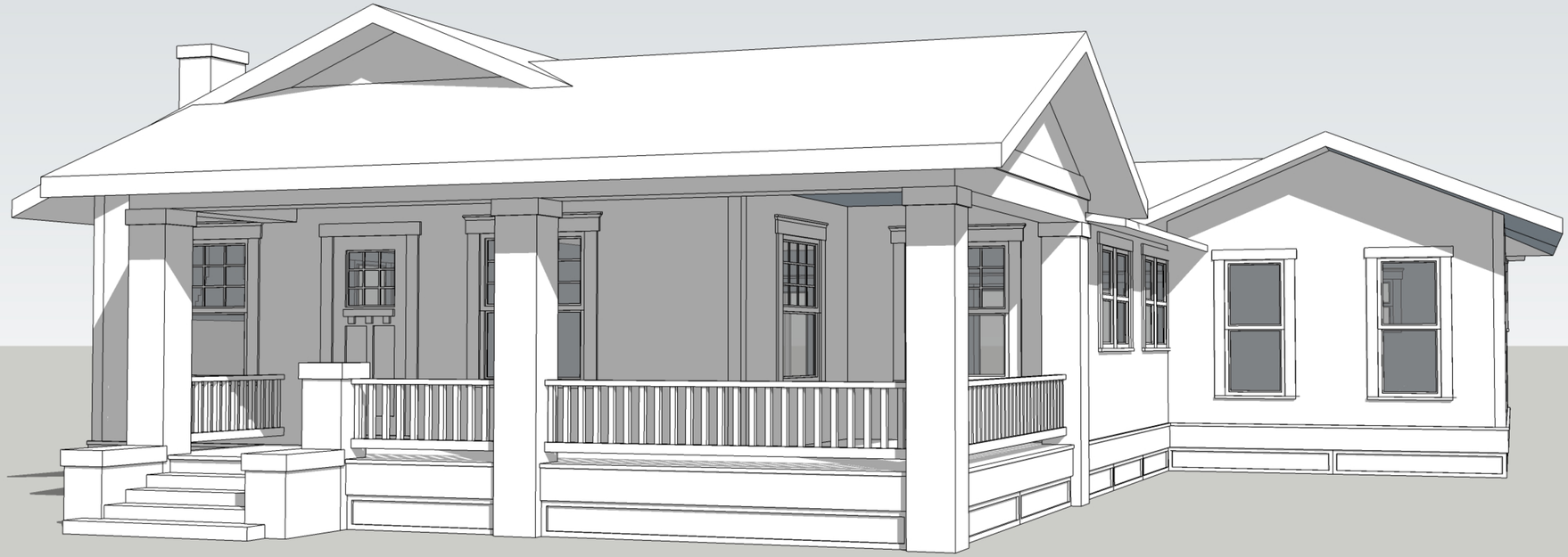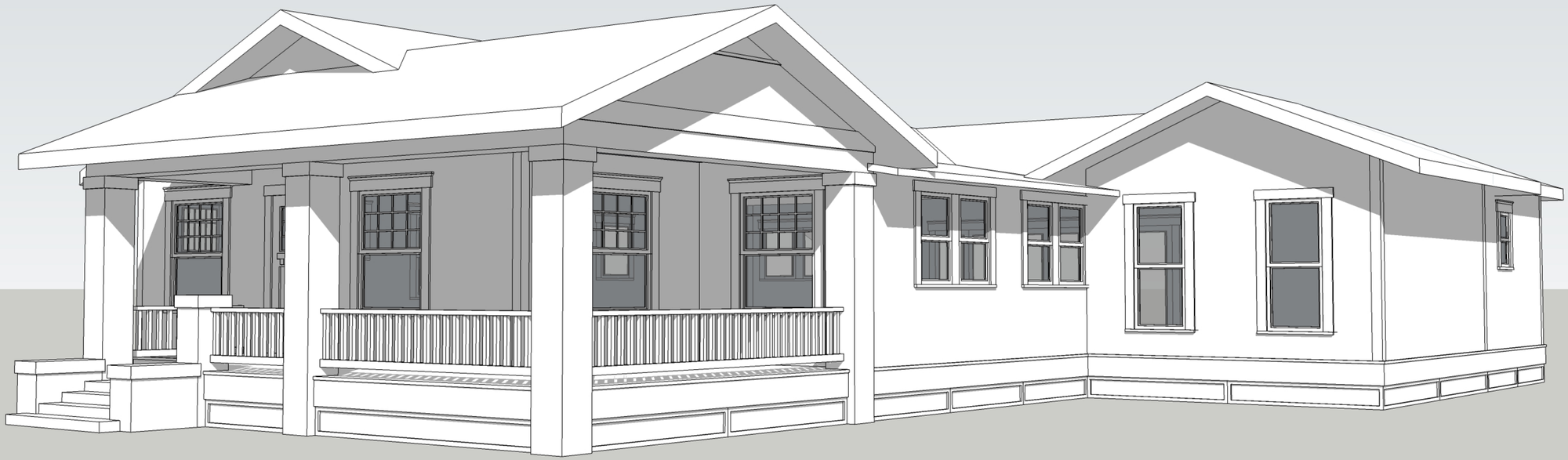
SCALE: 1/8" = 1'-0"