CERTIFICATE OF APPROPRIATENESS
APPLICATION FORM

PLANNING & DEVELOPMENT DEPARTMENT

PROPERTY

Address 605 Cortlandt / 3500 White oak, tracts 11 and 12, block 278, Houston Heights

Historic District / Landmark Houston Heights South HCAD #

Subdivision Houston Heights Lot 11+12 Block 278

DESIGNATION TYPE

- ☐ Landmark
- ☐ Protected Landmark
- ☐ Archaeological Site
- ☐ Contributing
- ☐ Noncontributing
- ☐ Vacant

PROPOSED ACTION

- ☐ Alteration or Addition
- ☐ Restoration
- ☑ New Construction
- ☐ Relocation
- ☐ Demolition
- ☐ Excavation

DOCUMENTS

☐ Application checklist for each proposed action and all applicable documentation listed within are attached

OWNER

Name PEDRO MARTINEZ

Company

Mailing Address 5310 BEECHNUT
Houston TEXAS 77096

Phone 713-444-0400

Email [redacted]

Signature

Date 3/3/2015

APPLICANT (if other than owner)

Name PEDRO MARTINEZ

Company

Mailing Address 5310 BEECHNUT
Houston TEXAS 77096

Phone 713-444-0400

Email [redacted]

Signature

Date 3/3/2015

ACKNOWLEDGEMENT OF RESPONSIBILITY

Requirements: A complete application includes all applicable information requested on checklists to provide a complete and accurate description of existing and proposed conditions. Preliminary review meeting or site visit with staff may be necessary to process the application. Owner contact information and signature is required. Late or incomplete applications will not be considered.

Deed Restrictions: You have verified that the work does not violate applicable deed restrictions.

Public Records: If attached materials are protected by copyright law, you grant the City of Houston, its officers, agencies, departments, and employees, non-exclusive rights to reproduce, distribute and publish copyrighted materials before the Houston Archaeological and Historical Commission, the Planning Commission, City Council, and other City of Houston commissions, agencies, and departments, on a City of Houston website, or other public forum for the purposes of application for a Certificate of Appropriateness or building permit, and other educational and not for profit purposes. You hereby represent that you possess the requisite permission or rights being conveyed here to the City.

Compliance: If granted, you agree to comply with all conditions of the COA. Revisions to approved work require staff review and may require a new application and HAHC approval. Failure to comply with the COA may result in project delays, fines or other penalties.

Planner: _____ *Application received:* ___/___/___ *Application complete:* ___/___/___

CERTIFICATE OF APPROPRIATENESS
NEW CONSTRUCTION CHECKLIST

PLANNING & DEVELOPMENT DEPARTMENT

Well in advance of the COA application deadline contact staff to discuss your project and, if necessary, to make an appointment to meet with staff for a project consultation.

Complete all applicable sections and submit with the COA application form. Staff can assist you in determining what items are required for your scope of work. An incomplete application may cause delays in processing or may be deferred to the next agenda. Application materials must clearly represent current and proposed conditions. Refer to Houston Code of Ordinances, Ch. 33 VII, Sec. 33-242 for approval criteria for new construction in a historic district.

PROPERTY ADDRESS: 605 Cortlandt / 3500 WhiteOak

NEW BUILDING TYPE

- [x] single-family residence
- [ ] multi-family residence
- [ ] commercial building
- [ ] mixed use building
- [ ] institutional building
- [ ] garage
- [ ] carport
- [ ] accessory structure
- [ ] other

DRAWINGS

scale like drawings the same; include all dimensions and drawing scale; label with cardinal directions

- [ ] site plan
- [ ] floor plans
- [ ] window and door schedule
- [ ] roof plan
- [ ] elevations (all sides)
- [ ] perspective

WRITTEN DESCRIPTION

- [ ] describe new structure including square footage, levels, foundation, siding, windows, doors, roof and details
- [ ] materials description; attach specification sheets if necessary

PHOTOGRAPHS label photos with description and location

- [ ] site as seen from street, from front and corners, include neighboring properties

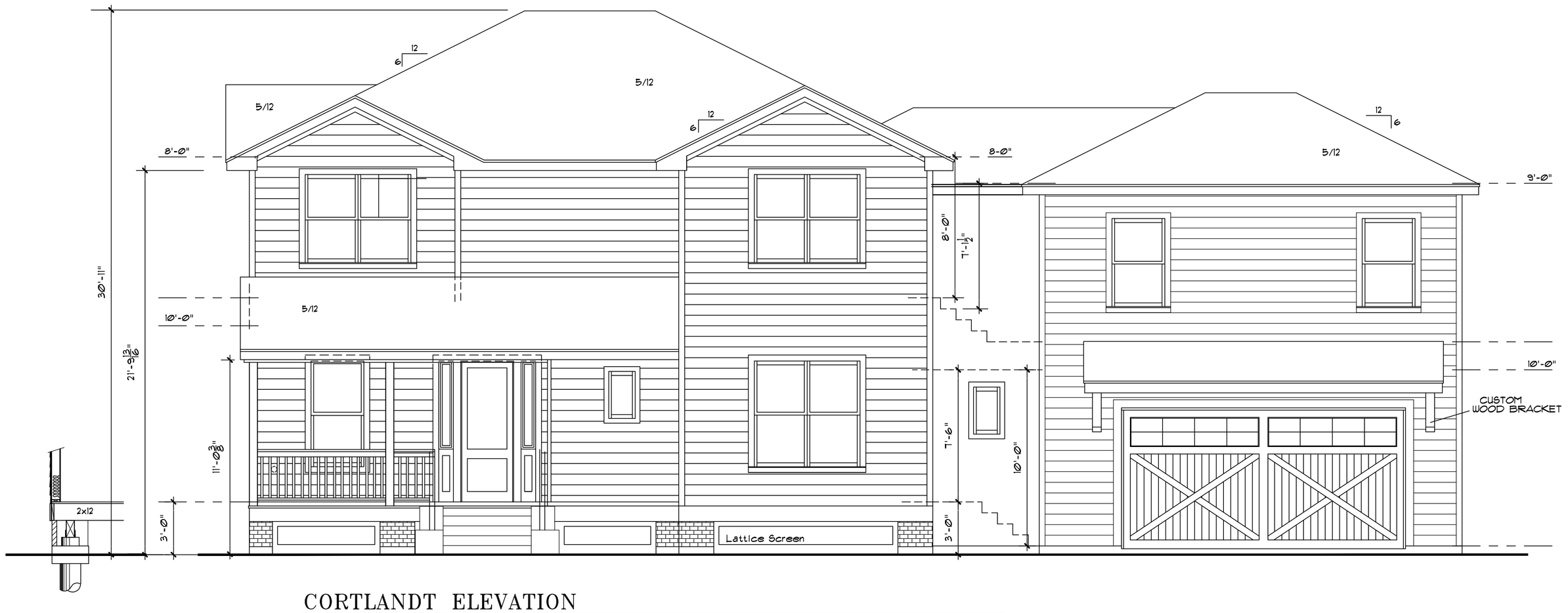

CORTLANDT ELEVATION

SCALE: 1/4"=1'-0"

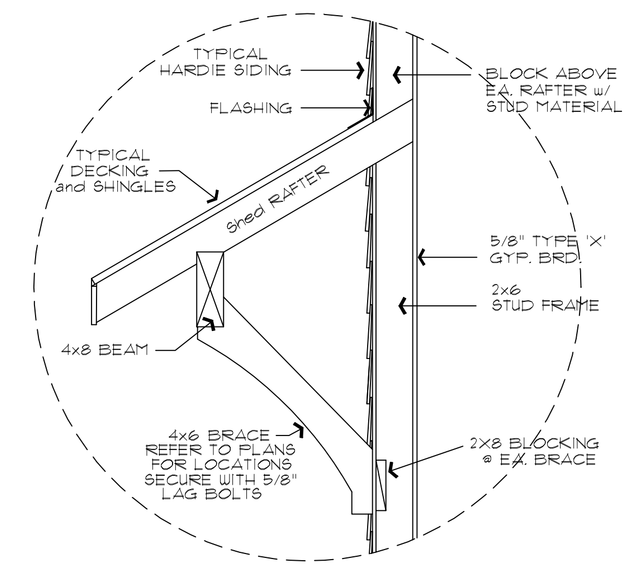

SHED BRACKET DETAIL

SCALE: 3/4" = 1'-0"

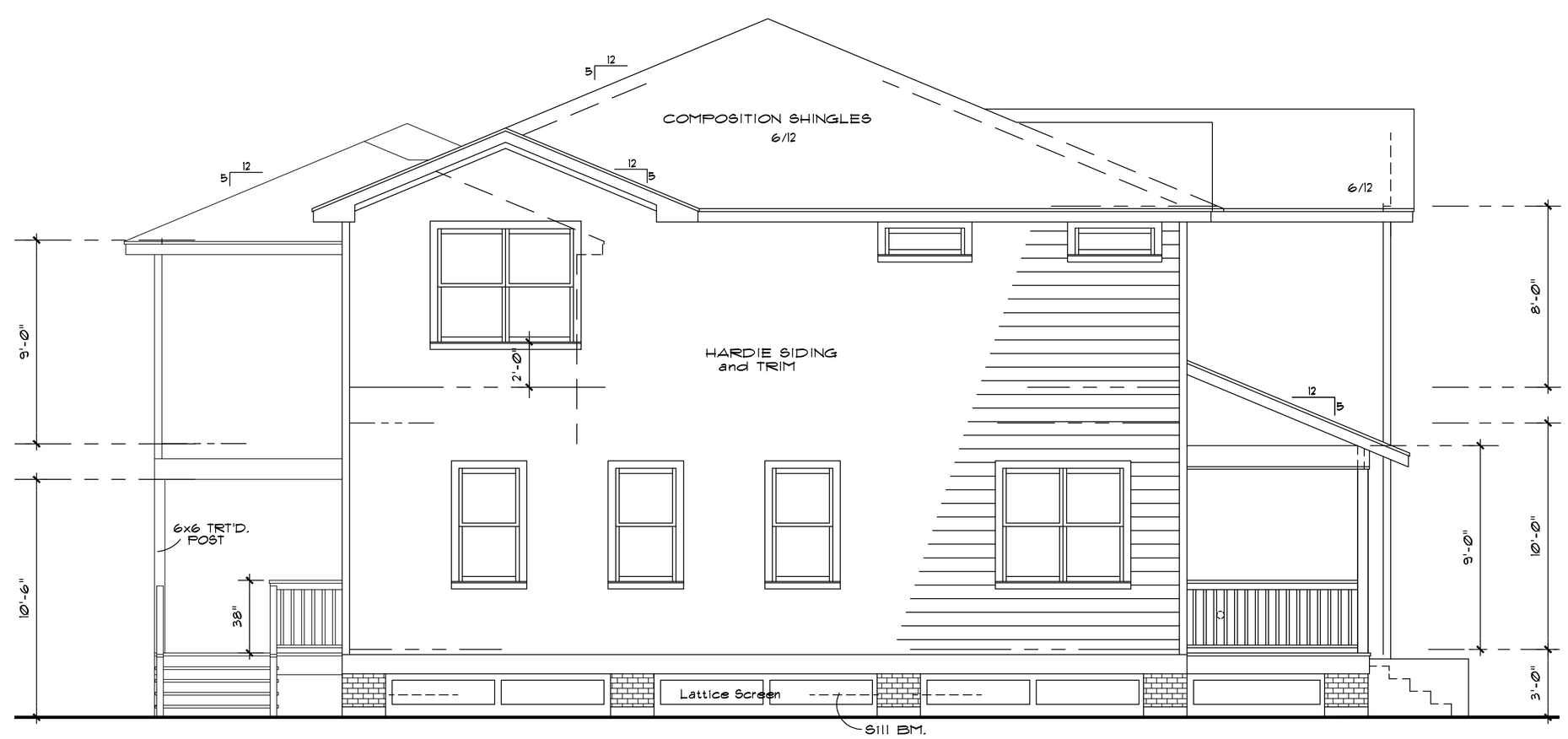

SOUTH ELEVATION

SCALE: 1/4"=1'-0"

ADDRESS: 605 CORTLANDT STREET/
3500 WHITE OAK
TRACTS: 11+12 BLK: 278 SEC:
SUBDIVISION: HOUSTON HEIGHTS

GEORGE BANKS + ASSOCIATES
RESIDENTIAL DESIGN
206 GRANBERRY ~ HUMBLE, TEXAS 77338 ~ 281.446.9034

PROJECT: CORTLANDT SPEC
LOCATION: HOUSTON, TEXAS
PRELIM: APPROVED:

SHEET NO:

A-1

DATE: 3/04/15

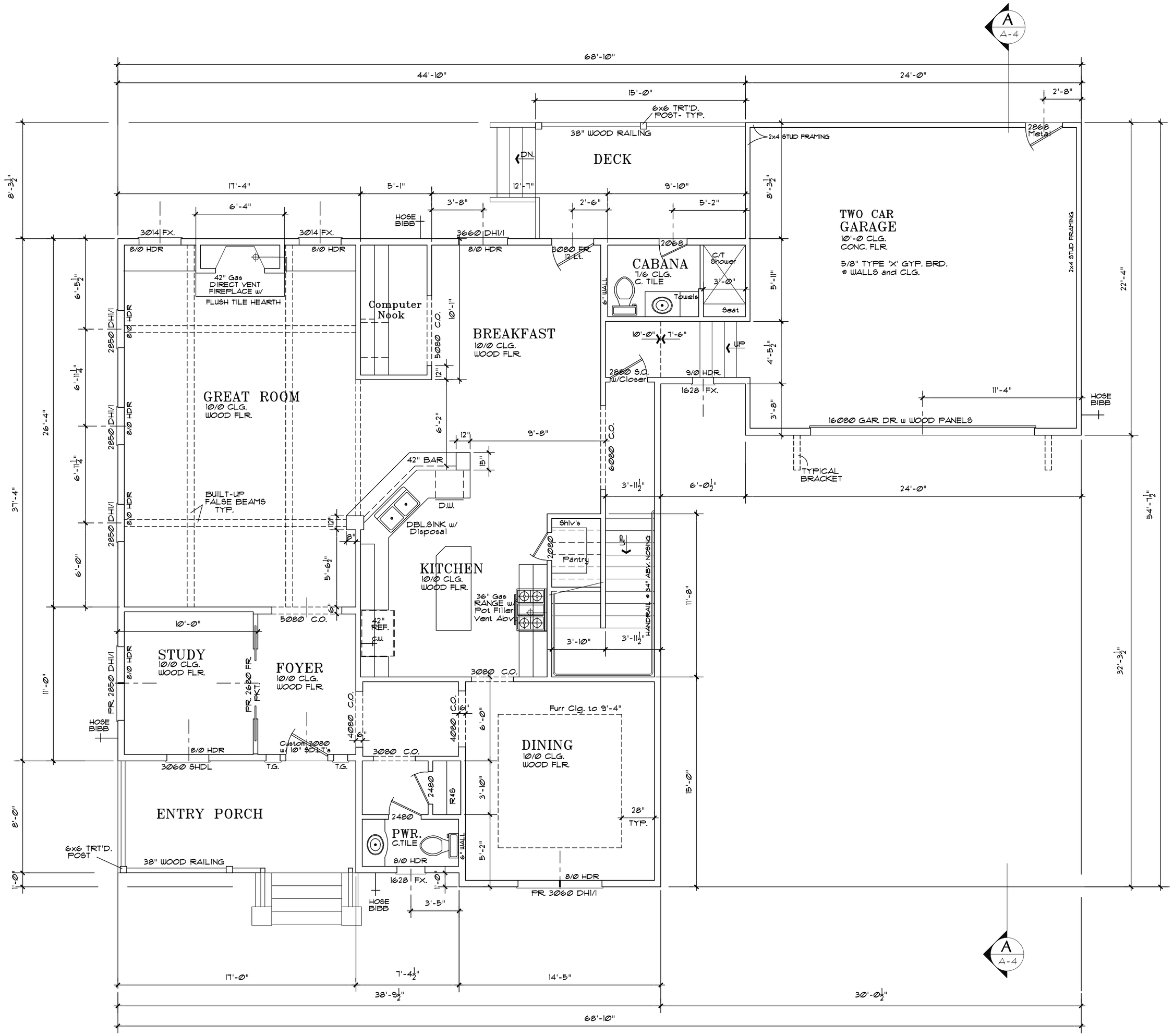

FIRST FLOOR PLAN

SCALE: 1/4"=1'-0"

FOOTAGES:

GROUND FLOOR	1659 SF
SECOND FLOOR	2261 SF
TOTAL LIVING	3920 SF
ENTRY PORCH	136 SF
REAR DECK	125 SF
GARAGE	577 SF
TOTAL COVERED	4428 SF

GENERAL NOTES

ALL EXTERIOR STUD FRAMING - 2x6 #2 SYP @ 16" O.C., UNLESS OTHERWISE NOTED.

ALL WINDOWS JELD WEN, WOOD DOUBLE HUNG, OR FIXED, DOUBLE PANE, Tempered where noted.

LANDINGS AT ALL EXTERIOR DOORS SHALL COMPLY w/R311.4.3 OF THE IRC 2006.

ALL DOORS AND WINDOWS SHALL BE IN COMPLIANCE WITH IRC Sec. R308-GLAZING and R613.2 (IRC 2006).

BATH TUB and SHOWER SPACES SHALL COMPLY w/ R307.2 OF THE IRC, NON-ABSORBANT SURFACES TO A MINIMUM OF 72" ABOVE FINISHED FLOOR.

ADDRESS: 605 CORTLANDT STREET/
3500 WHITE OAK
TRACTS: 11+12 BLK:
SUBDIVISION: HOUSTON HEIGHTS
SEC:

GEORGE BANKS + ASSOCIATES
RESIDENTIAL DESIGN
206 GRANBERRY ~ HUMBLE, TEXAS 77338 ~ 281.446.9034

PROJECT: CORTLANDT SPEC
LOCATION: HOUSTON, TEXAS
PRELIM: APPROVED:

SHEET NO:
A-2

DATE: 3/04/15

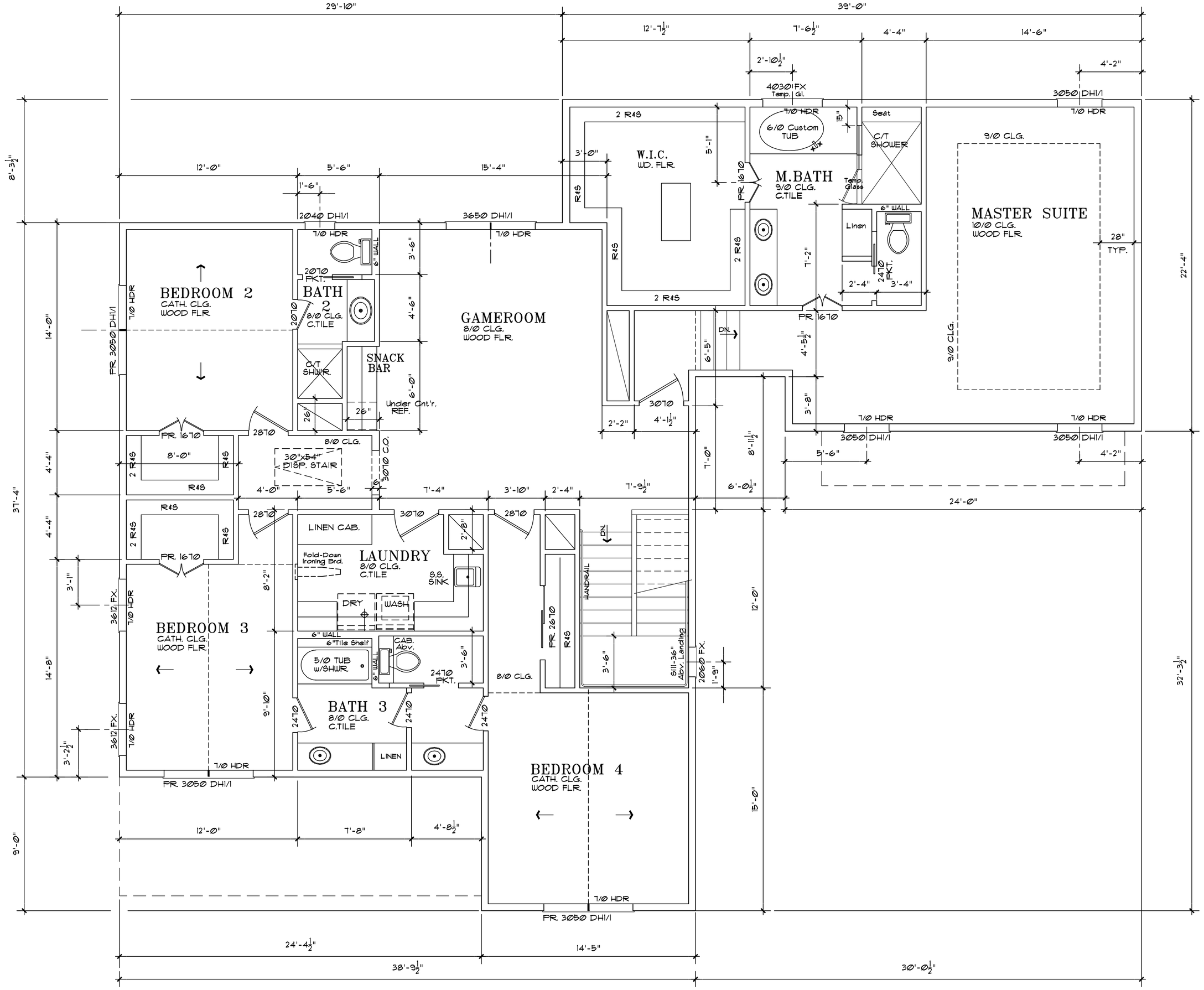

SECOND FLOOR PLAN

SCALE: 1/4"=1'-0"

ADDRESS: 605 CORTLANDT STREET/
3500 WHITE OAK
SEC:
TRACTS: 11+12 BLK:
SUBDIVISION: HOUSTON HEIGHTS

GEORGE BANKS + ASSOCIATES
RESIDENTIAL DESIGN
206 GRANBERRY ~ HUMBLE, TEXAS 77338 ~ 281.446.9034

PROJECT: CORTLANDT SPEC
LOCATION: HOUSTON, TEXAS
PRELIM: APPROVED:

SHEET NO:
A-3

DATE: 3/04/15

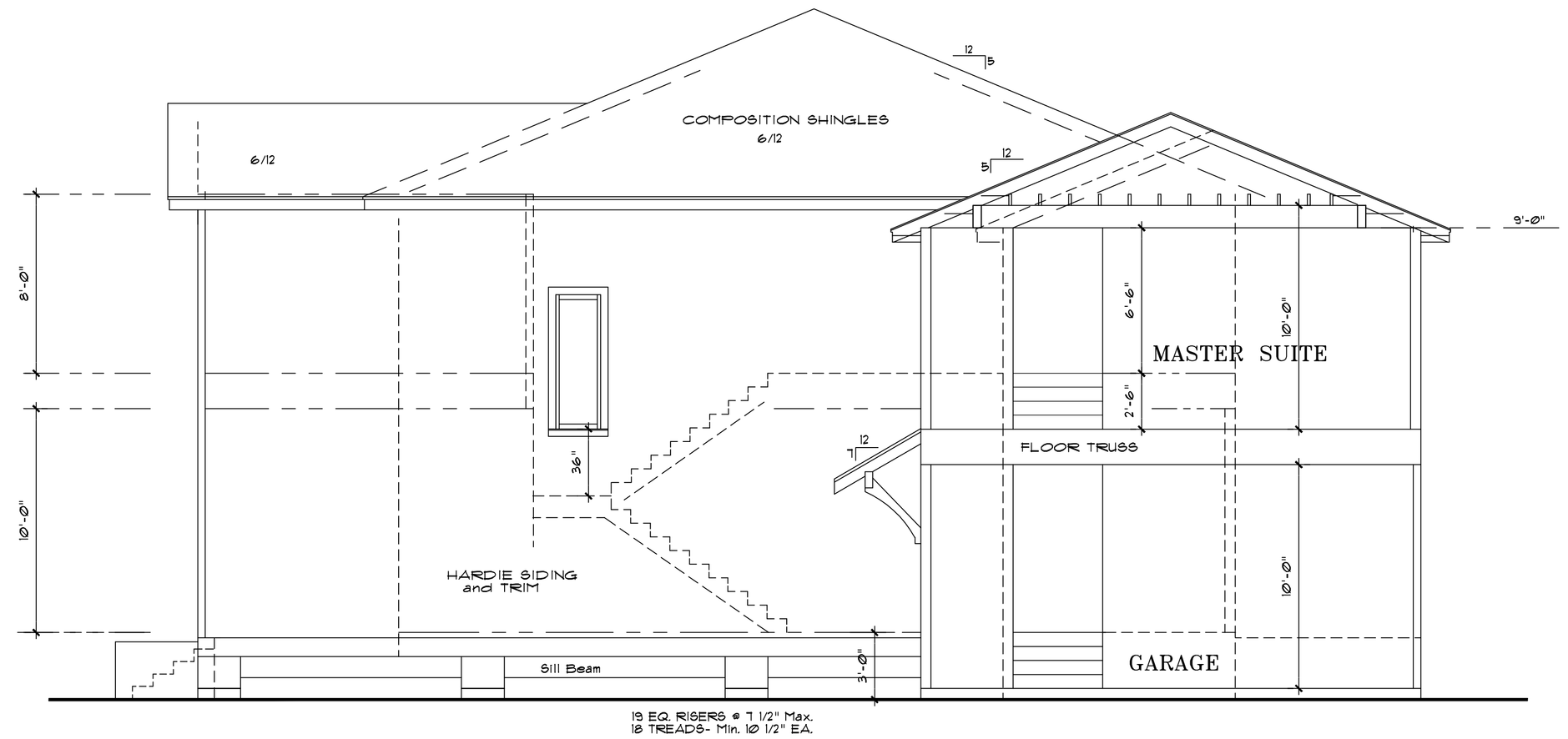

SECTION A-A

SCALE: 1/4"=1'-0"

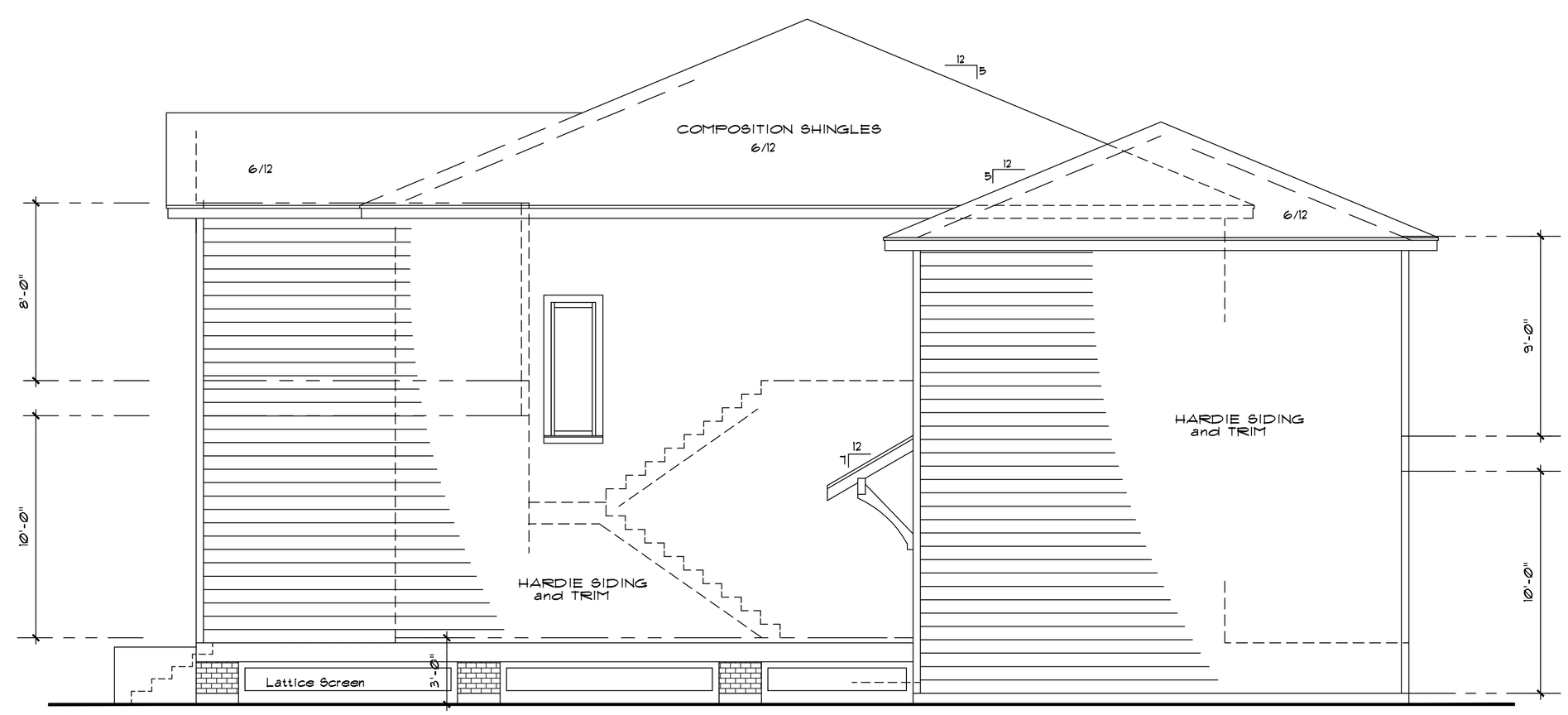

NORTH ELEVATION

SCALE: 1/4"=1'-0"

ADDRESS: 605 CORTLANDT STREET/
3500 WHITE OAK
TRACTS: 11+12 BLK: 278 SEC:
SUBDIVISION: HOUSTON HEIGHTS

GEORGE BANKS + ASSOCIATES
RESIDENTIAL DESIGN
206 GRANBERRY ~ HUMBLE, TEXAS 77338 ~ 281.446.9034

PROJECT: CORTLANDT SPEC
LOCATION: HOUSTON, TEXAS
PRELIM: APPROVED:

SHEET NO:
A-4

DATE: 3/04/15

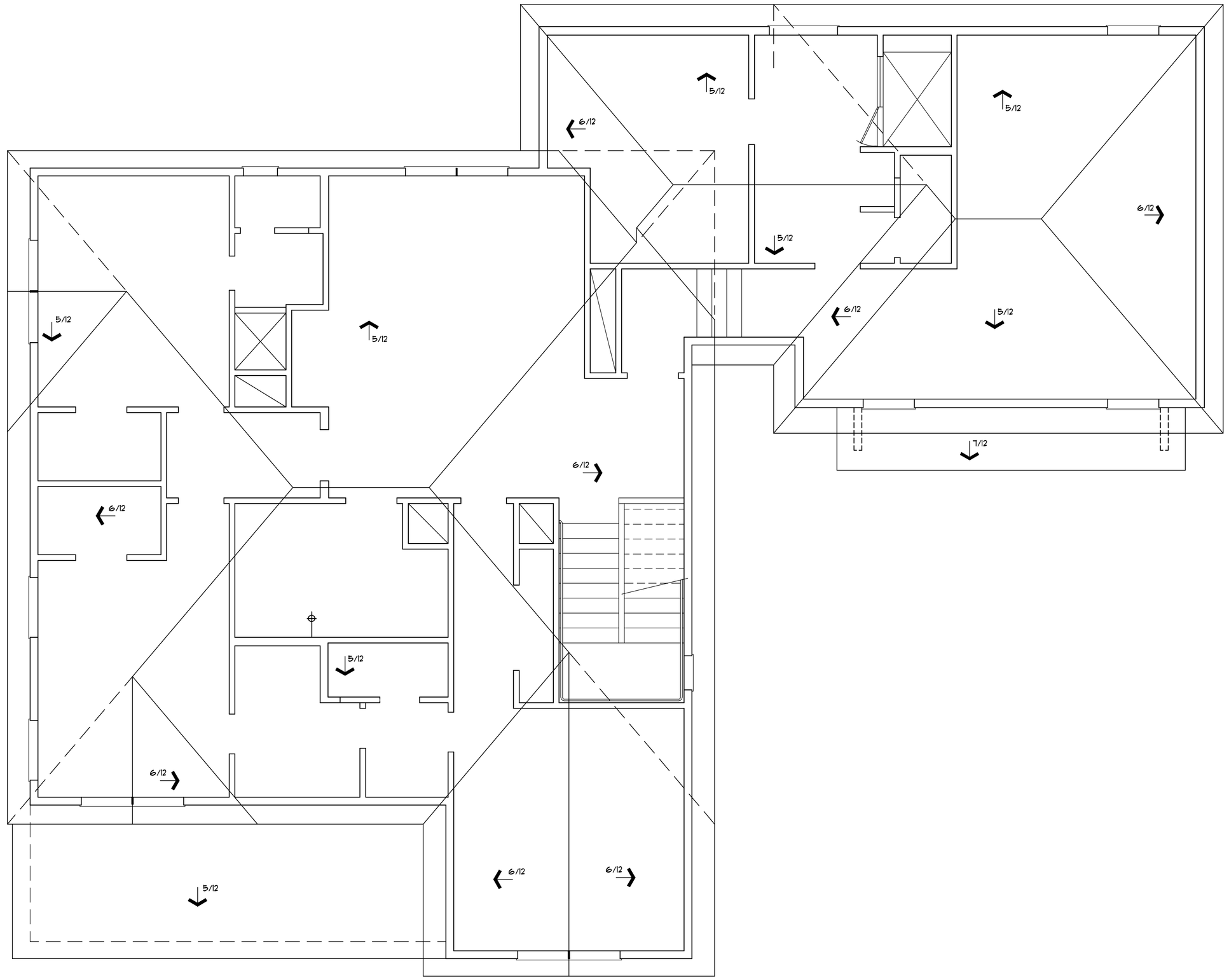

ROOF PLAN

SCALE: 1/4"=1'-0"

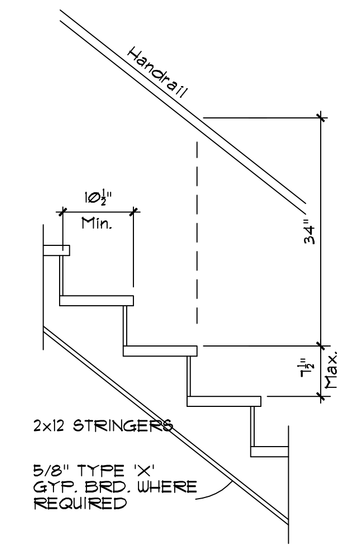

TYPICAL STAIR DETAIL

SCALE: 3/4" =1'-0"

HANDRAIL - Min. 1 1/4"
Max. 2 5/8" dia. AND
SHALL MEET THE REQUIREMENTS
OF R3014 OF THE IRC 2006
HAVING A MINIMUM UNIFORMLY
DISTRIBUTED LIVE LOAD OF 200#
THE SAME FOR A SINGLE
CONCENTRATED LOAD APPLIED IN
ANY DIRECTION

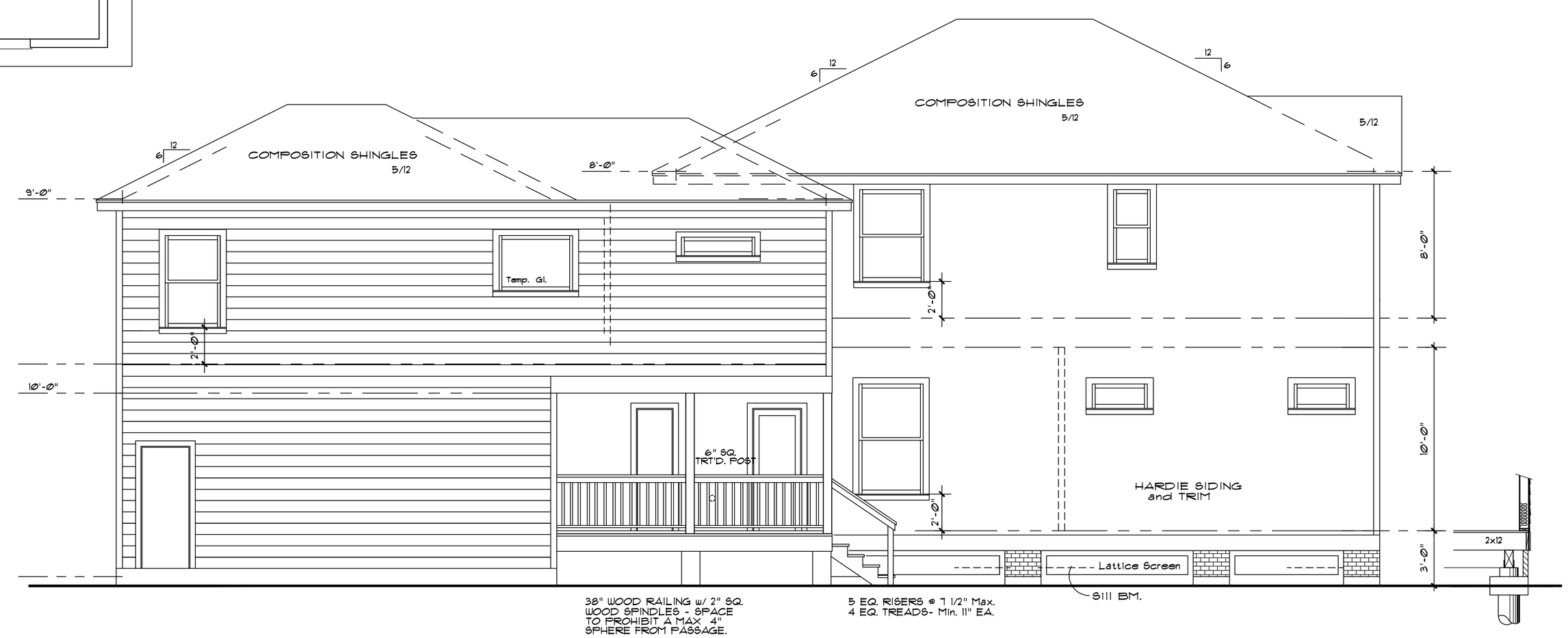

WEST ELEVATION

SCALE: 1/4"=1'-0"

ADDRESS: 605 CORTLANDT STREET/
3500 WHITE OAK
TRACTS: 11+12 BLK: 278 SEC:
SUBDIVISION: HOUSTON HEIGHTS

GEORGE BANKS + ASSOCIATES
RESIDENTIAL DESIGN
206 GRANBERRY ~ HUMBLE, TEXAS 77338 ~ 281.446.9034

PROJECT: CORTLANDT SPEC
LOCATION: HOUSTON, TEXAS
PRELIM: APPROVED:

SHEET NO:

A-5

DATE: 3/04/15

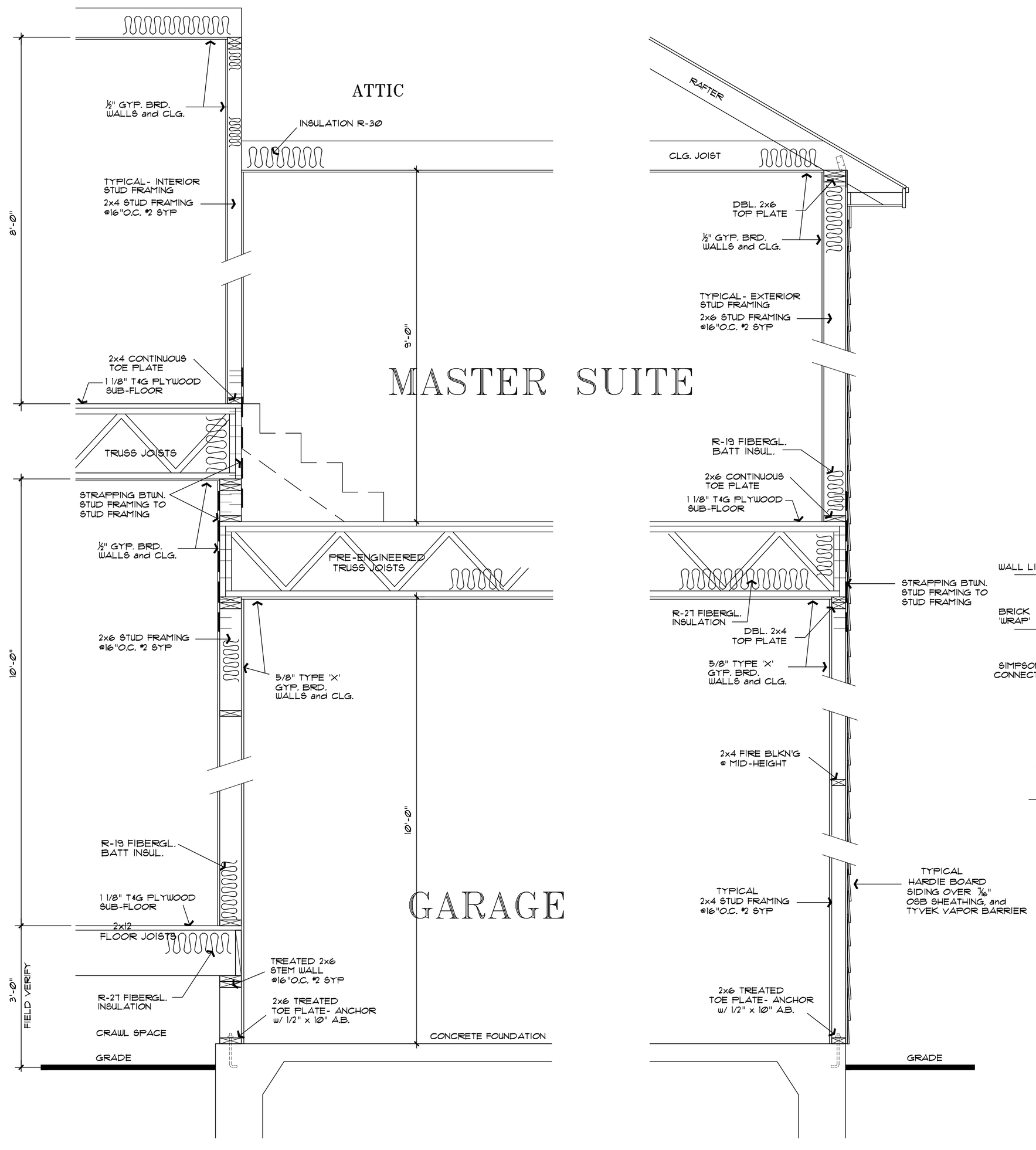

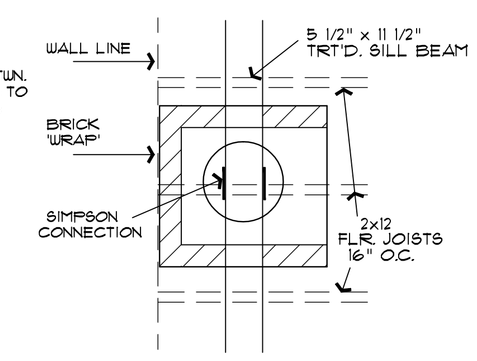

CONCRETE BASE and PIER

SCALE: 3/4"=1'-0"

REFER TO STRUCTURAL DWG's FOR DETAILS and SPECIFICS

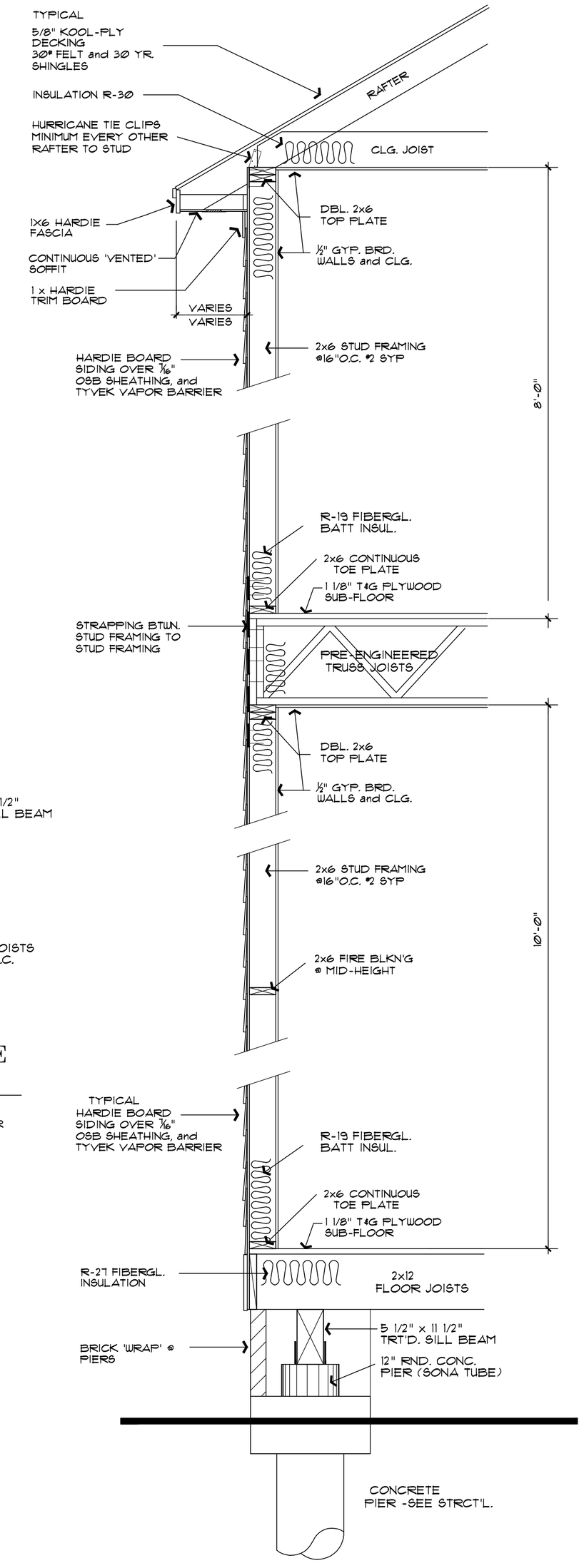

WALL SECTIONS THRU LIVING AREA and GARAGE

SCALE: 3/4" = 1'-0"

TYPICAL EXTERIOR WALL SECTION

SCALE: 3/4" = 1'-0"

ADDRESS: 605 CORTLANDT STREET/ 3500 WHITE OAK
TRACTS: 11+12 BLK: 278 SEC:
SUBDIVISION: HOUSTON HEIGHTS

GEORGE BANKS + ASSOCIATES
RESIDENTIAL DESIGN
206 GRANBERRY ~ HUMBLE, TEXAS 77338 ~ 281.446.9034

PROJECT: CORTLANDT SPEC
LOCATION: HOUSTON, TEXAS
PRELIM: APPROVED:

SHEET NO: A-8

DATE: 3/04/15

CORTLANDT SPEC

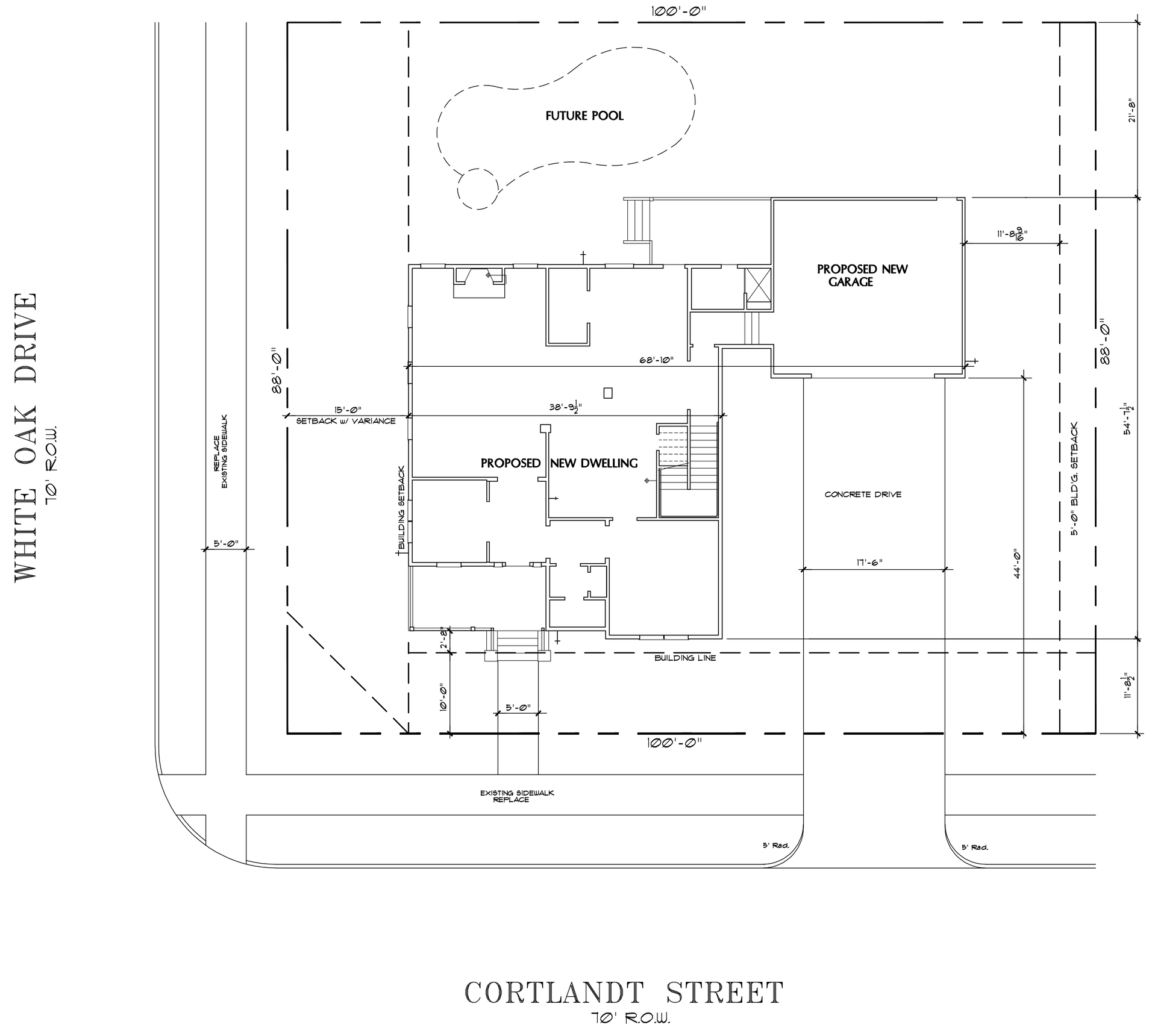

INDEX of DRAWINGS

C COVER SHEET, SITE PLAN, and NOTES
A 1 EXTERIOR ELEVATIONS
A 2 FIRST FLOOR PLAN
A 3 SECOND FLOOR PLAN
A 4 EXTERIOR ELEVATION and SECTION
A 5 EXTERIOR ELEVATION and ROOF PLAN
A 6 FIRST FLOOR ELECTRICAL
A 7 SECOND FLOOR ELECTRICAL
A 8 WALL SECTIONS
A 9 INTERIOR CABINET ELEVATIONS

S 1
S 2
S 3
S 4
S 5

IMPERVIOUS AREAS

TOTAL PROPOSED NEW CONSTRUCTION	
Dwelling and Garage	2236 S.F.
PORCH and DECK	261 S.F.
CONC. DRIVES and SIDEWALK	837 S.F.
TOTAL	3334 S.F.
LOT FOOTAGE	8800 S.F.
RATIO of COVERAGE	38%

DRAINAGE NOTE

LOT TO BE GRADED SO AS TO COMPLY WITH SECTIONS R 401.3, R 401.5, and R 403.1.7.3 OF THE IRC.

SITE PLAN

SCALE: 1/8" = 1'-0"

TRACTS 11+12 SEC. 10
HOUSTON HEIGHTS
HOUSTON
HARRIS COUNTY, TX

ADDRESS: 605 CORTLANDT STREET/ 3500 WHITE OAK
TRACTS: 11+12 BLK: 278 (1) SEC:
SUBDIVISION: HOUSTON HEIGHTS

GEORGE BANKS + ASSOCIATES
RESIDENTIAL DESIGN
206 GRANBERRY ~ HUMBLE, TEXAS 77338 ~ 281.446.9034

PROJECT: CORTLANDT SPEC
LOCATION: HOUSTON, TEXAS
PRELIM: APPROVED:

SHEET NO: C

DATE: 2/18/15