CERTIFICATE OF APPROPRIATENESS
APPLICATION FORM

PLANNING & DEVELOPMENT DEPARTMENT

PROPERTY

Address 638 HEIGHTS BLVD HOUSTON TX 77007

Historic District / Landmark HCAD #

Subdivision HOUSTON HEIGHTS Lot 22 Block 277

DESIGNATION TYPE

- ☐ Landmark
- ☐ Protected Landmark
- ☐ Archaeological Site
- ☒ Contributing
- ☐ Noncontributing
- ☐ Vacant

PROPOSED ACTION

- ☐ Alteration or Addition
- ☒ Restoration
- ☐ New Construction
- ☐ Relocation
- ☐ Demolition
- ☐ Excavation

DOCUMENTS

☒ Application checklist for each proposed action and all applicable documentation listed within are attached

OWNER

Name GABRIEL SALAZAR

Company

Mailing Address 9330 GARDEN BREEZE
HOUSTON TX 77075

Phone 832-875-7775

Email [redacted]

Signature

Date 04/27/15

APPLICANT (if other than owner)

Name

Company

Mailing Address

Phone

Email

Signature

Date

ACKNOWLEDGEMENT OF RESPONSIBILITY

Requirements: A complete application includes all applicable information requested on checklists to provide a complete and accurate description of existing and proposed conditions. Preliminary review meeting or site visit with staff may be necessary to process the application. Owner contact information and signature is required. Late or incomplete applications will not be considered.

Deed Restrictions: You have verified that the work does not violate applicable deed restrictions.

Public Records: If attached materials are protected by copyright law, you grant the City of Houston, its officers, agencies, departments, and employees, non-exclusive rights to reproduce, distribute and publish copyrighted materials before the Houston Archaeological and Historical Commission, the Planning Commission, City Council, and other City of Houston commissions, agencies, and departments, on a City of Houston website, or other public forum for the purposes of application for a Certificate of Appropriateness or building permit, and other educational and not for profit purposes. You hereby represent that you possess the requisite permission or rights being conveyed here to the City.

Compliance: If granted, you agree to comply with all conditions of the COA. Revisions to approved work require staff review and may require a new application and HAHC approval. Failure to comply with the COA may result in project delays, fines or other penalties.

Planner: _____ *Application received:* ___/___/___ *Application complete:* ___/___/___

Rev. 02.2015

CERTIFICATE OF APPROPRIATENESS
APPLICATION INSTRUCTIONS

PLANNING & DEVELOPMENT DEPARTMENT

Well in advance of the COA application deadline contact staff to discuss your project, application requirements, and, if necessary, to make an appointment to meet with staff for a project consultation. Visit the Historic Preservation Web Manual for historic district profiles, project guidance and forms. www.houstontx.gov/HistoricPreservationManual

Historic Preservation Office	**832.393.6556**	**historicpreservation@houstontx.gov**

SUBMISSION INSTRUCTIONS

To submit application to Planning Department:

- email documents to historicpreservation@houstontx.gov (attachments must be less than 10MB)
- send a Dropbox shared folder invitation to historicpreservation@houstontx.gov, or
- contact staff to set up an appointment to drop off a disc or flash drive.

MEETING SCHEDULE

- Applications are due **22 calendar days** in advance of the HAHC meeting by **12 PM (noon)** on the deadline date. Exception: revisions to items deferred or denied at the previous HAHC meeting are due 15 days in advance of the scheduled meeting.
- Application deadlines are firm. All materials must be submitted by the deadline to be considered at the following HAHC meeting. Designs must be final at time of application; revisions will not be accepted after the deadline.
- HAHC will not accept new material or redesigns presented at the HAHC meeting. Deferral until the following month's meeting may be necessary in such cases to allow for adequate review by staff and commissioners.
- HAHC monthly meetings are held at 3:00 PM at City Hall Annex, 900 Bagby Street, City Council Chambers, Public Level.

2015 Meeting Dates (Thursdays unless noted otherwise)	**COA Application Deadlines**	**Demolition / Relocation Posted Sign Deadlines**
January 29	January 7	January 19
February 26	February 4	February 16
March 26	March 4	March 16
April 23	April 1	April 13
May 21	April 29	May 11
June 18	May 27	June 8
July 22 (Wednesday)	June 30	July 12
August 27	August 5	August 17
September 24	September 2	September 14
October 22	September 30	October 12
November 19	October 28	November 9
December 16 (Wednesday)	November 24	December 6

CERTIFICATE OF APPROPRIATENESS APPLICATION
PART I – GENERAL FORM

PLANNING & DEVELOPMENT DEPARTMENT

DEFINITIONS

Addition: any expansion to an existing building, structure or object.

Alteration: any change to the exterior of a building or structure, including adding, moving, removing or replacing an exterior feature.

Demolition: an act or process that destroys in whole, or a majority of, any building, structure, object or site.

Excavation: to expose, uncover, or remove by digging, cutting or hollowing out.

Exterior Feature: an element of the architectural character and the general arrangement of the external portion of a building, structure or object, including building materials.

Mandatory Repair: a repair of a building or structure that is necessary to comply with Article IX, Ch. 10, Houston Code of Ordinances, as evidenced by an order of the hearing official or the building and standards commission or by a citation.

New Construction: the erection of a new building, structure, or object, on a lot, site, or other property.

Relocation: any change in the location of a building, structure, or object.

Restoration: accurately recovering the form and detail of a building, structure, object, or site and its setting as it appeared at a particular period of time by means of the removal of later work, or by the replacement of missing earlier work, or both.

To be completed by PLANNING STAFF:	*Application received by:*	*Date:*
	Accepted as complete by:	*Date:*

CERTIFICATE OF APPROPRIATENESS
ALTERATION & ADDITON CHECKLIST

<u>Well in advance</u> of the COA application deadline contact staff to discuss your project and, if necessary, to make an appointment to meet with staff for a project consultation.

Complete all applicable items and submit with the COA application form. Staff can assist you in determining what items are required for your scope of work. An incomplete application may cause delays in processing or may be deferred to the next agenda. Application materials must clearly represent current and proposed conditions. Refer to Houston Code of Ordinances, Ch. 33 VII, Sec. 33-241 for approval criteria for alteration, rehabilitation, restoration and additions.

PROPERTY ADDRESS: 638 HEIGHTS BLVD HOUSTON TX 77007

BUILDING TYPE

- [x] single-family residence
- [ ] multi-family residence
- [ ] commercial building
- [ ] mixed use building
- [ ] institutional building
- [ ] garage
- [ ] carport
- [ ] accessory structure
- [ ] other

ALTERATION TYPE

- [ ] addition
- [ ] foundation
- [ ] wall siding or cladding
- [ ] windows or doors
- [ ] porch or balcony
- [ ] roof
- [ ] awning or canopy
- [ ] commercial sign
- [ ] ramp or lift
- [x] other

WRITTEN DESCRIPTION

- [ ] property description, current conditions and any prior alterations or additions
- [ ] proposed work; plans to change any exterior features, and/or addition description
- [ ] current building material conditions and originality of any materials proposed to be repaired or replaced
- [ ] proposed new materials description; attach specification sheets if necessary

PHOTOGRAPHS label photos with description and location

- [ ] elevations of all sides
- [x] detail photos of exterior elements subject to proposed work
- [ ] historical photos as evidence for restoration work

DRAWINGS scale like drawings the same; include all dimensions and drawing scale; label with cardinal directions

- [ ] current site plan
- [ ] proposed site plan
- [ ] current floor plans
- [ ] proposed floor plans
- [ ] current window and door schedule
- [ ] proposed window and door schedule
- [ ] demolition plan
- [ ] current roof plan
- [ ] proposed roof plan
- [ ] current elevations (all sides)
- [ ] proposed elevations (all sides)
- [ ] perspective and/or line of sight

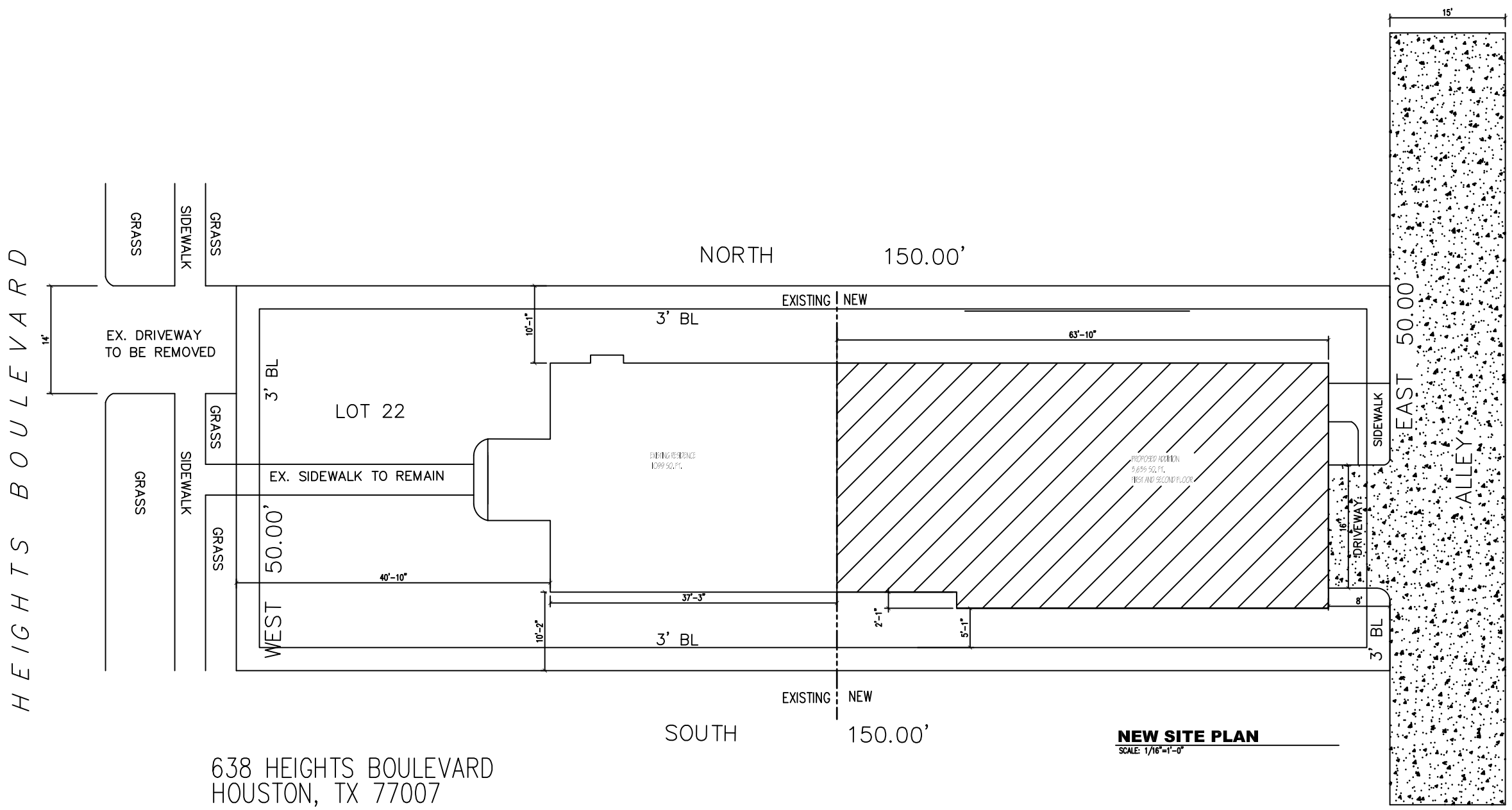

NEW SITE PLAN
SCALE: 1/16"=1'-0"

638 HEIGHTS BOULEVARD
HOUSTON, TX 77007

ORIGINAL DATE: OCTOBER-10-2014

REVISION NUMBER	REVISION DATE	REVISION BY

638 HEIGHTS
HOUSTON TX. 77007

City/Jurisdiction
HOUSTON

SITE PLAN

SHEET No:
A-1

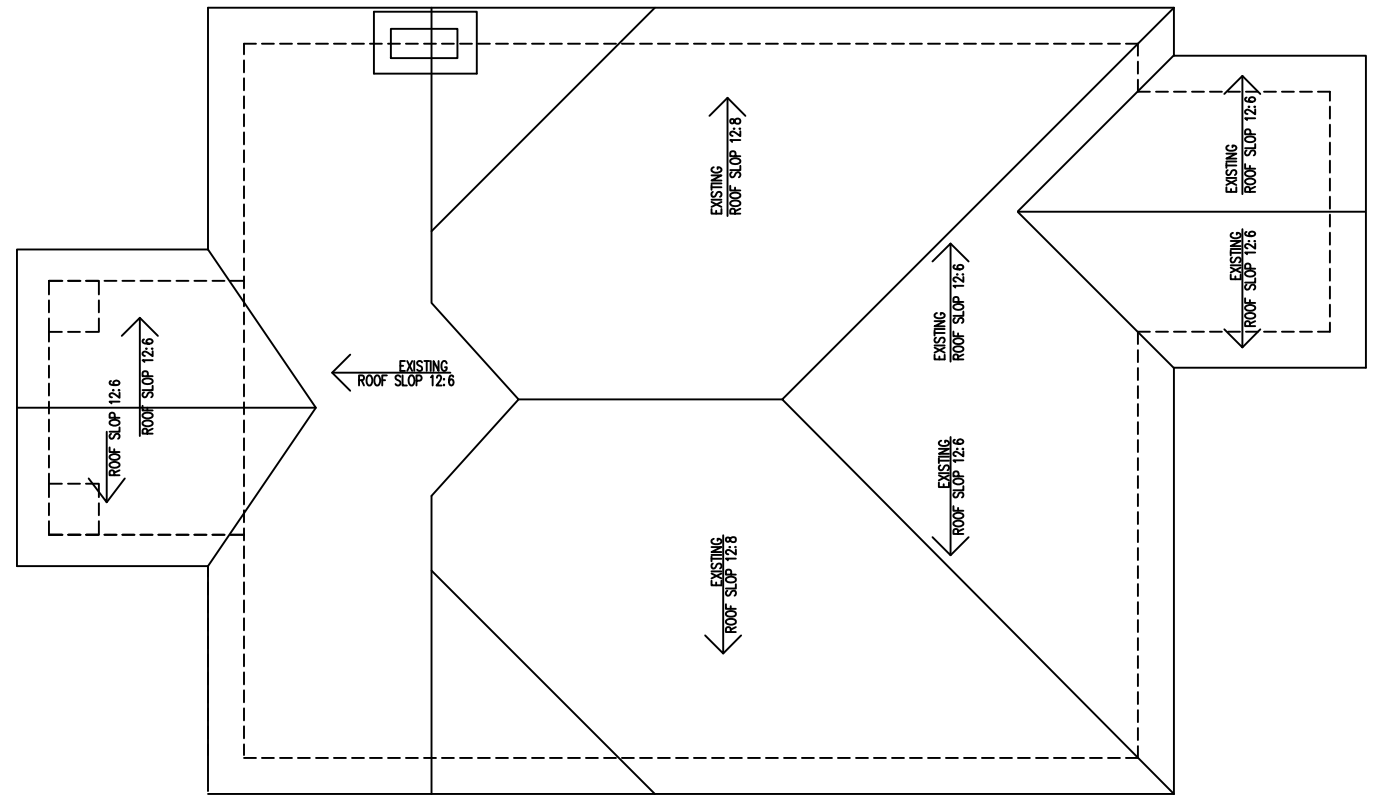

EXISTING "AS BUILD" ROOF PLAN

SCALE: 1/4"=1'-0"

OPENING DIMENSION ONLY

WINDOW SCHEDULE EXISTING

FIRST FLOOR

W NO.	WIDTH/HIEGHT	TYPE/ MATERIAL	ROOM
E101 E103 E104 E105	6'-1"x5'-5"	SINGLE HUNG/ WOOD CASING	EX. KITCHEN EX. DINING ROOM EX. DINING ROOM EX. LIVING ROOM
E102 E106 E107 E109	2'-7"x3'-1"	SINGLE HUNG/ WOOD CASING	EX. KITCHEN EX. LIVING ROOM EX. LIVING ROOM EX. BATHROOM #2
E108	8'-9"x5'-5"	SINGLE HUNG/ WOOD CASING	EX. BETHROOM

NOTE:
EXISTING WINDOWS TO REMAIN.

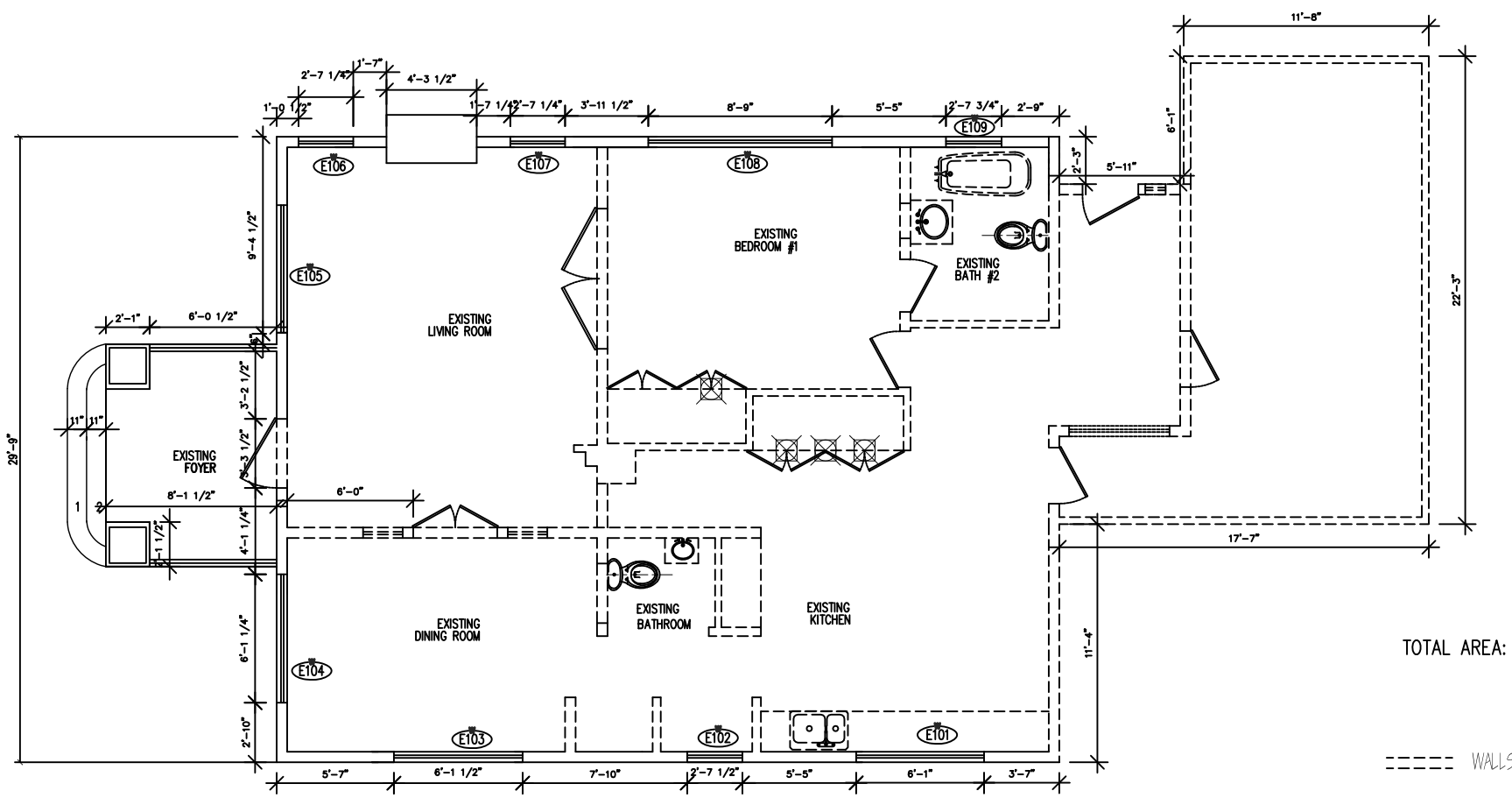

EXISTING "AS BUILD" FIRST FLOOR

SCALE: 1/4"=1'-0"

TOTAL AREA: 1,108 SQ FT

WALLS TO BE REMOVED

EXISTING WALLS TO REMAIN

ORIGINAL DATE: OCTOBER-10-2014

REVISION NUMBER	REVISION DATE	REVISION BY

638 HEIGHTS
HOUSTON TX. 77007

City/Jurisdiction
HOUSTON

DEMOLITION PLAN

SHEET No:

A-2

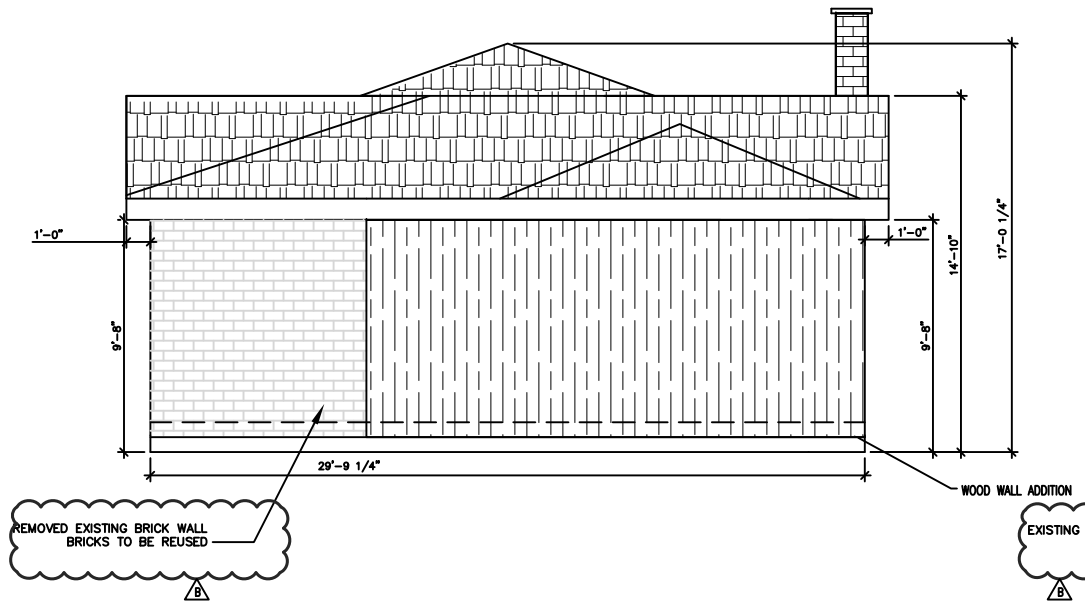

EXISTING EAST ELEVATION

SCALE: 1/4"=1'-0"

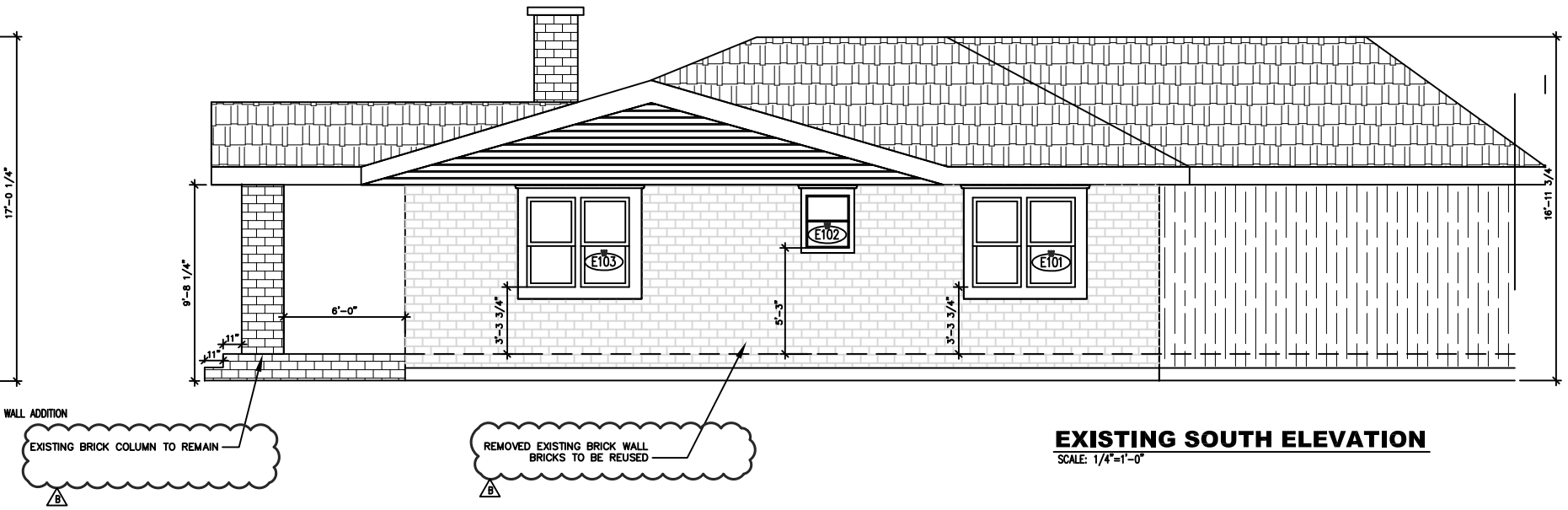

EXISTING SOUTH ELEVATION

SCALE: 1/4"=1'-0"

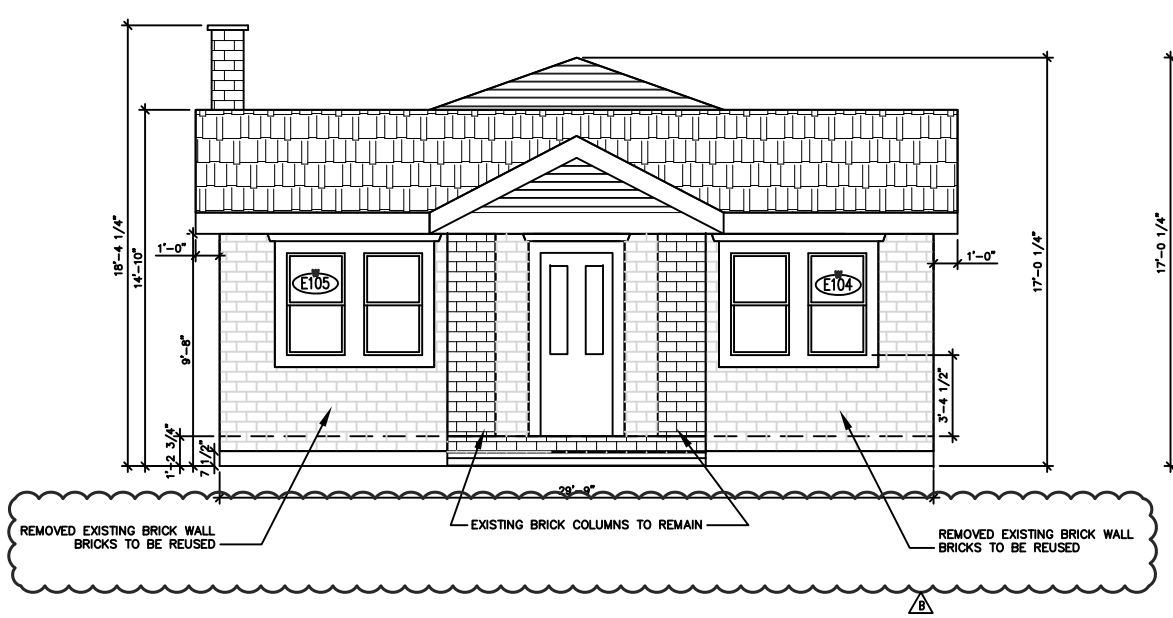

EXISTING WEST ELEVATION

SCALE: 1/4"=1'-0"

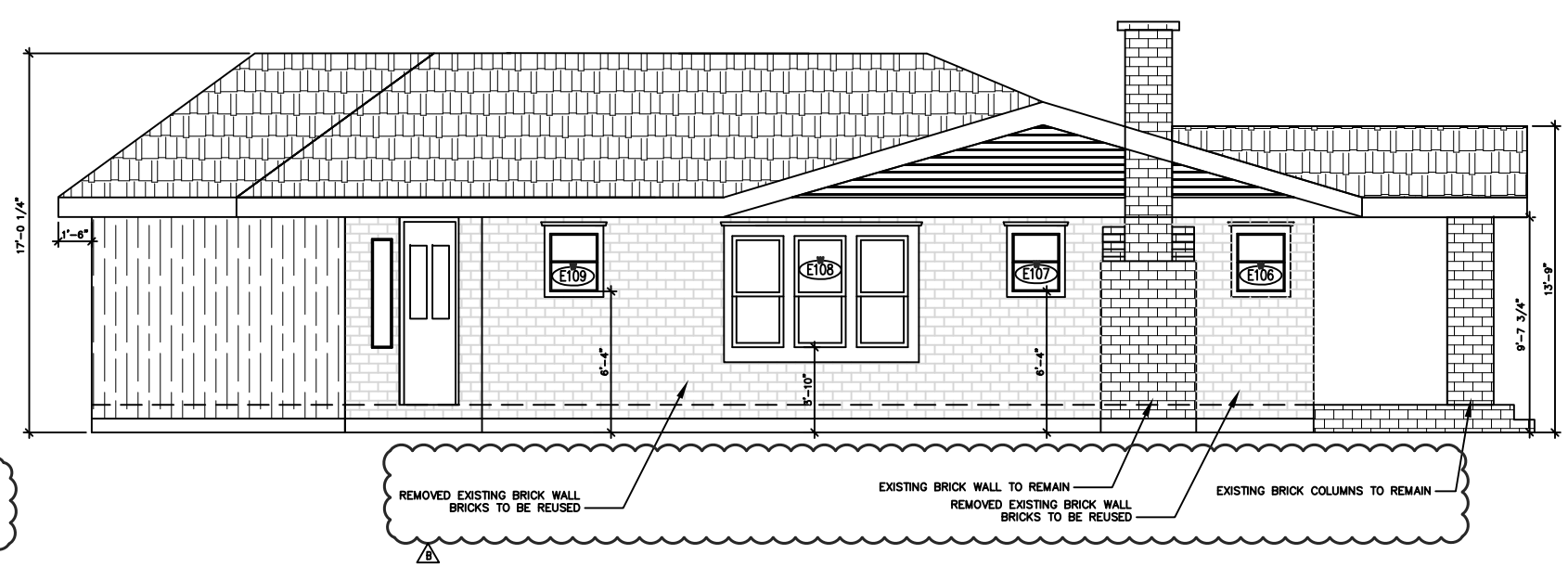

EXISTING NORTH ELEVATION

SCALE: 1/8"=1'-0"

ORIGINAL DATE: OCTOBER-10-2014

REVISION NUMBER	REVISION DATE	REVISION BY
B	04-08-15	GS

638 HEIGHTS
HOUSTON TX. 77007

City/Jurisdiction
HOUSTON

EXISTING ELEVATIONS PLAN

SHEET No:

A-3

OPENING DIMENSION ONLY

WINDOW SCHEDULE NEW ADDITION

FIRST FLOOR

W NO.	WIDTH/HIEGHT	TYPE/ MATERIAL	ROOM
102	2'-0"x2'-0"	SINGLE HUNG/ WOOD CASING	BATHROOM #1
104 105 106 107	3'-0"x5'-0"	SINGLE HUNG/ WOOD CASING	MASTER BEDROOM MASTER BEDROOM KITCHEN KITCHEN
101 108	1'-0"x3'-0"	PICTURE WINDOW	KITCHEN KITCHEN
103	4'-0"x4'-0"	PICTURE WINDOW WITH TEMPERED SAFETY GLASS	MASTER BATHROOM

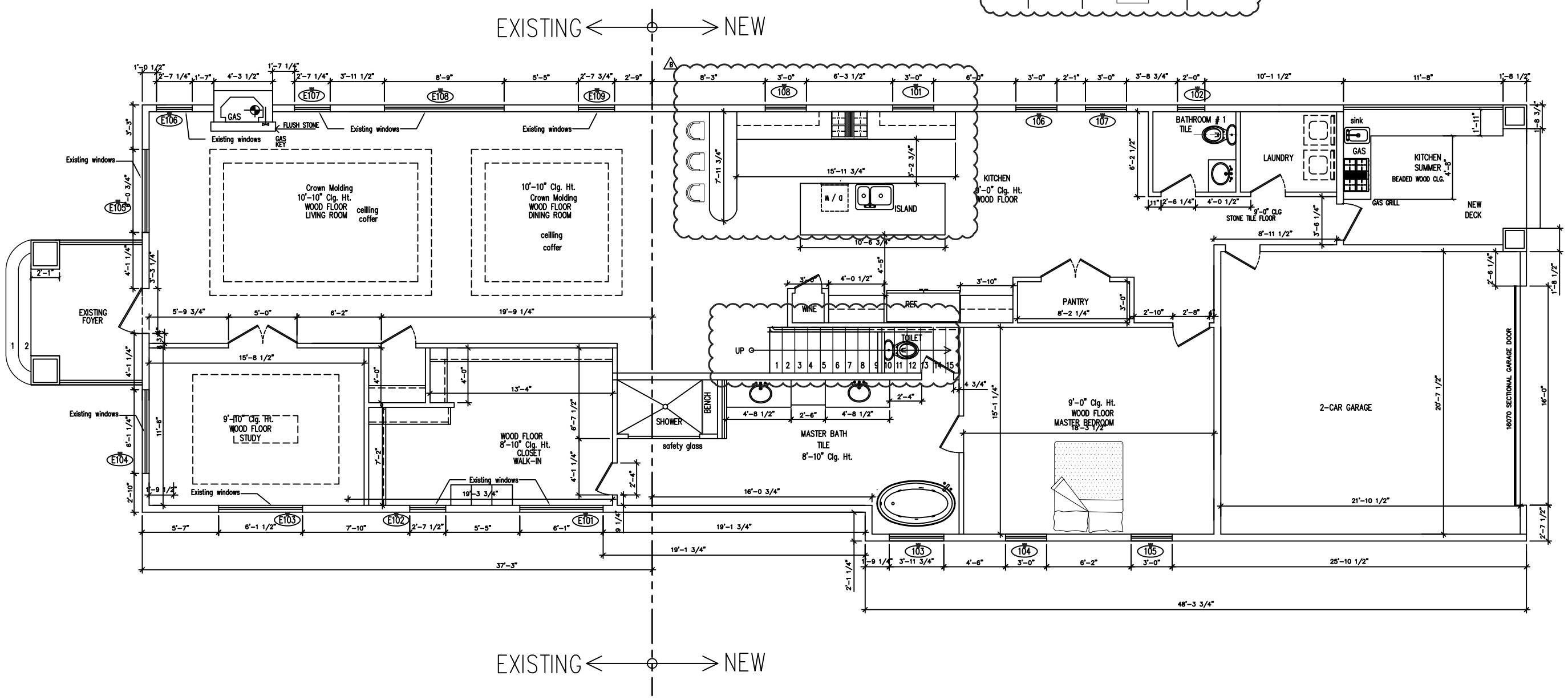

NEW FIRST FLOOR PLAN

SCALE: 1/8"=1'-0"

FIRST FLOOR	3,196
SECOND FLOOR	1,538
TOTAL AREA:	4,734

ORIGINAL DATE: OCTOBER-10-2014

REVISION NUMBER	REVISION DATE	REVISION BY
B	04-08-15	GS

638 HEIGHTS
HOUSTON TX. 77007

City/Jurisdiction
HOUSTON

NEW FIRST FLOOR PLAN

SHEET No:

A-4

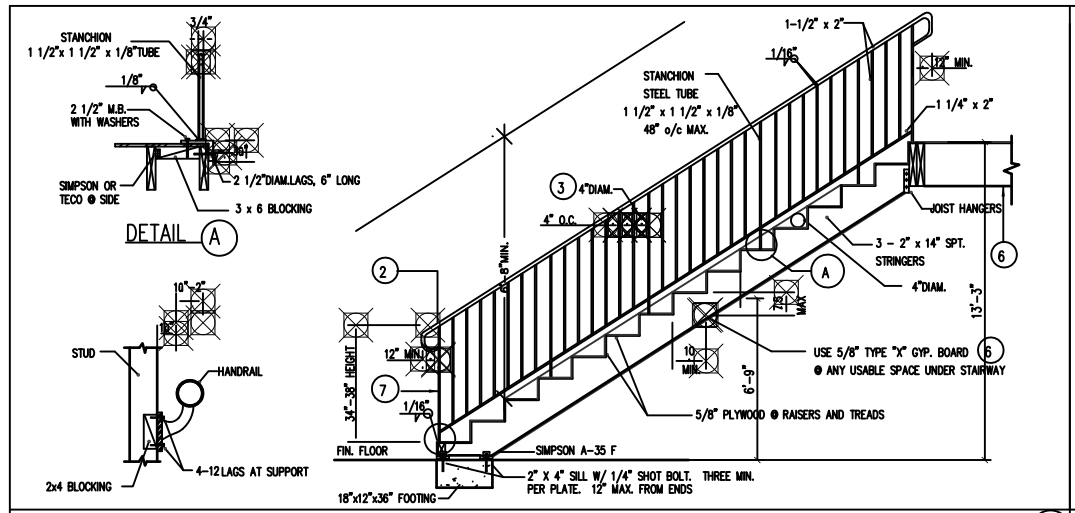

TYPICAL STAIR DETAIL (D6)

STAIR AND GUARD NOTES:

1. STAIRWAYS SHALL COMPLY WITH IRC 2000, SECT'S, R312, R314, R315, AND R316.
2. HANDRAILS TO BE 34" TO 38" ABOVE NOSE OF TRAD (IRC 2000, SECT. R315.1).
3. GUARDRAILS AT 36" TO 42" ABV. FIN. FLR. (IRC 2000, SECT. R316.1) SPACE BETWEEN BALUSTERS AT 4" MAX. (IRC 2000, SECT. R316.2).
4. HAND GRIPPING PORTION OF HANDRAILS SHALL BE NOT LESS THAN 1 1/4", NOR MORE THAN 2 5/8" IN CROSS SECTION OR THE SHAPE SHALL PROVIDE AN EQUIVALENT GRASPING SURFACE (IRC 2000, SECT. 315.2).
5. (ONE) HANDRAIL SHALL BE CONTINUOUS THE FULL LEGTH OF THE STAIRS AND SHALL EXTEND NOT LESS THAN 6" BEYOND TOP AND BOTTOM RESERS, AND SHALL TERMINATE INTO A NEWEL POST OR SAFETY TERMINAL (IRC 2000, SECT. 315.1). HANDRAILS ADJACENT TO A WALL SHALL HAVE A SPACE OF NOT LESS THAN 1 1/2" BETWEEN WALL AND RAIL HANDRAILS SHALL NOT PROJECT MORE THAN 4 1/2" ON EITHER SIDE OF THE STAIRWAY (IRC 2000, SECT. R314.1).
6. IF THE UNDERSIDE OF STAIRWELL IS CLOSED OFF, PTOBIFR 5/8" TYPE "X" FIRE RATED GYPSUM BOARD TO THE UNDERSIDE OF STAIRS.
7. NEWEL POST (THAT RAILING TERMINATES INTO) SHALL BE LOCATED NO HIGHER THAN THE FIRST TREAD.
8. MINIMUM CLEAR WIDTH BETWEEN (AND BELOW) HANDRAILS SHALL BE 27" (DOUBLE), AND 31 1/2" (SINGLE RAIL). SEE IRC 2000, SECT. R314.1.
9. MAXIMUM RISER HEIGHT SHALL BE 7 3/4", MINIMUM TREAD DEPTH SHALL BE 10" (IRC 2000, SECT. R314.2).
10. MINIMUM HEADROOM IN ALL PARTS OF THE STAIRS SHALL NOT BE LESS THAN 6" - 8" (FINISHED HEIGHT), MEASURED VERTICALLY FROM SLOPED PLANE ADJOINING THE TREAD NOSING OR FROM THE FLOOR SURFACE OF THE LANDING OR PLATFORM (IRC 2000, SECT. R314.3).

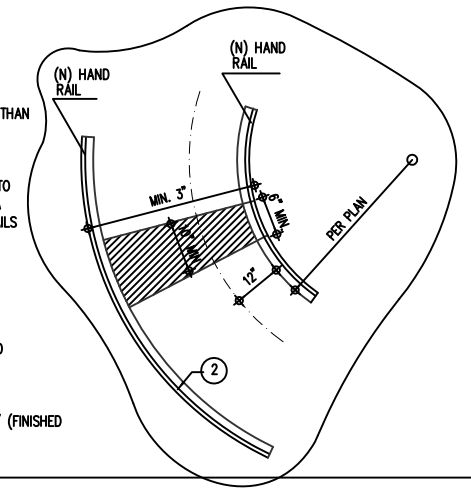

OPENING DIMENSION ONLY

WINDOW SCHEDULE NEW ADDITION

SECOND FLOOR

W NO.	WIDTH/HIEGHT	TYPE/ MATERIAL	ROOM
	5'-10"x5'-5"	SINGLE HUNG/ WOOD CASING	
204	2'-0"x2'-0"	SINGLE HUNG/ WOOD CASING	BATHROOM #2
209			BATHROOM #3
202	3'-0"x5'-0"	SINGLE HUNG/ WOOD CASING	BEDROOM #4
203			BEDROOM #4
205			BEDROOM #3
206			BEDROOM #3
210			BEDROOM #2
211			BEDROOM #2
201			BEDROOM #4
207			GAMEROOM
208			GAMEROOM
212			BEDROOM #2

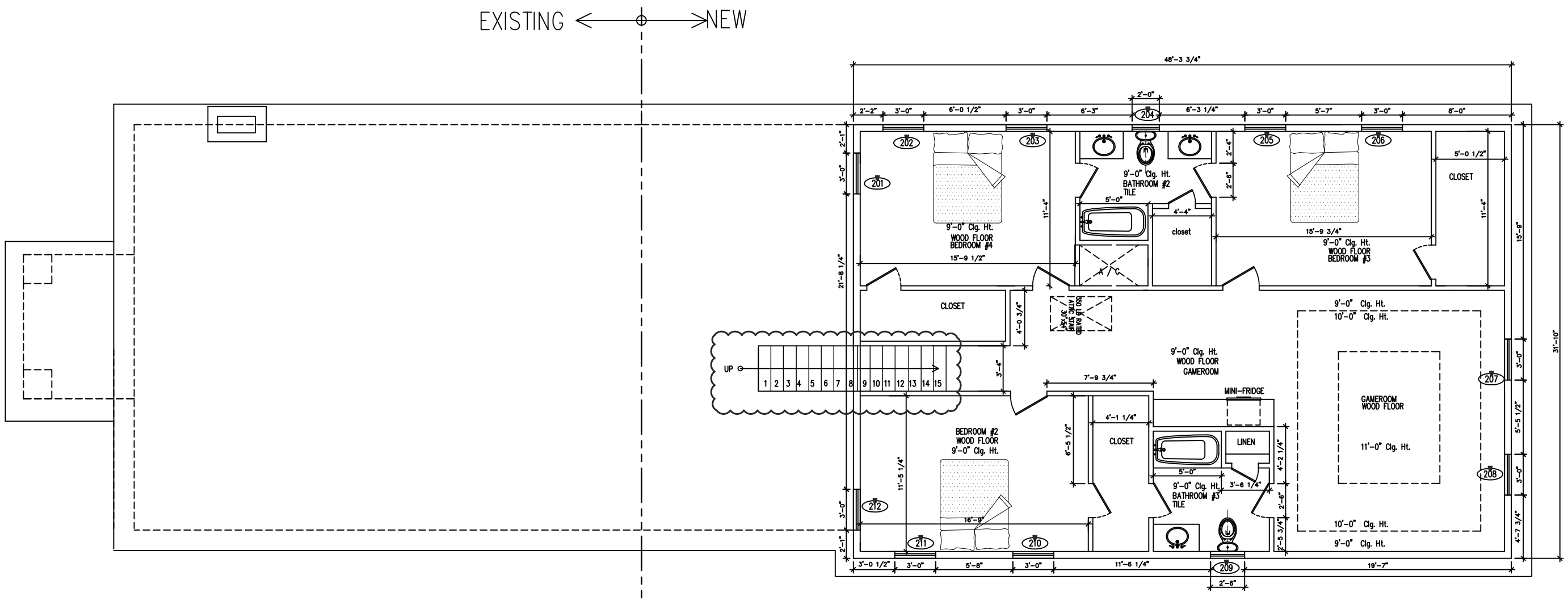

NEW SECOND FLOOR PLAN

SCALE: 1/8"=1'-0"

FIRST FLOOR	3,196
SECOND FLOOR	1,538
TOTAL AREA:	4,734

ORIGINAL DATE: OCTOBER-10-2014

REVISION NUMBER	REVISION DATE	REVISION BY
B	04-08-15	GS

638 HEIGHTS
HOUSTON TX. 77007

City/Jurisdiction
HOUSTON

NEW SECOND FLOOR PLAN

SHEET No:

A-5

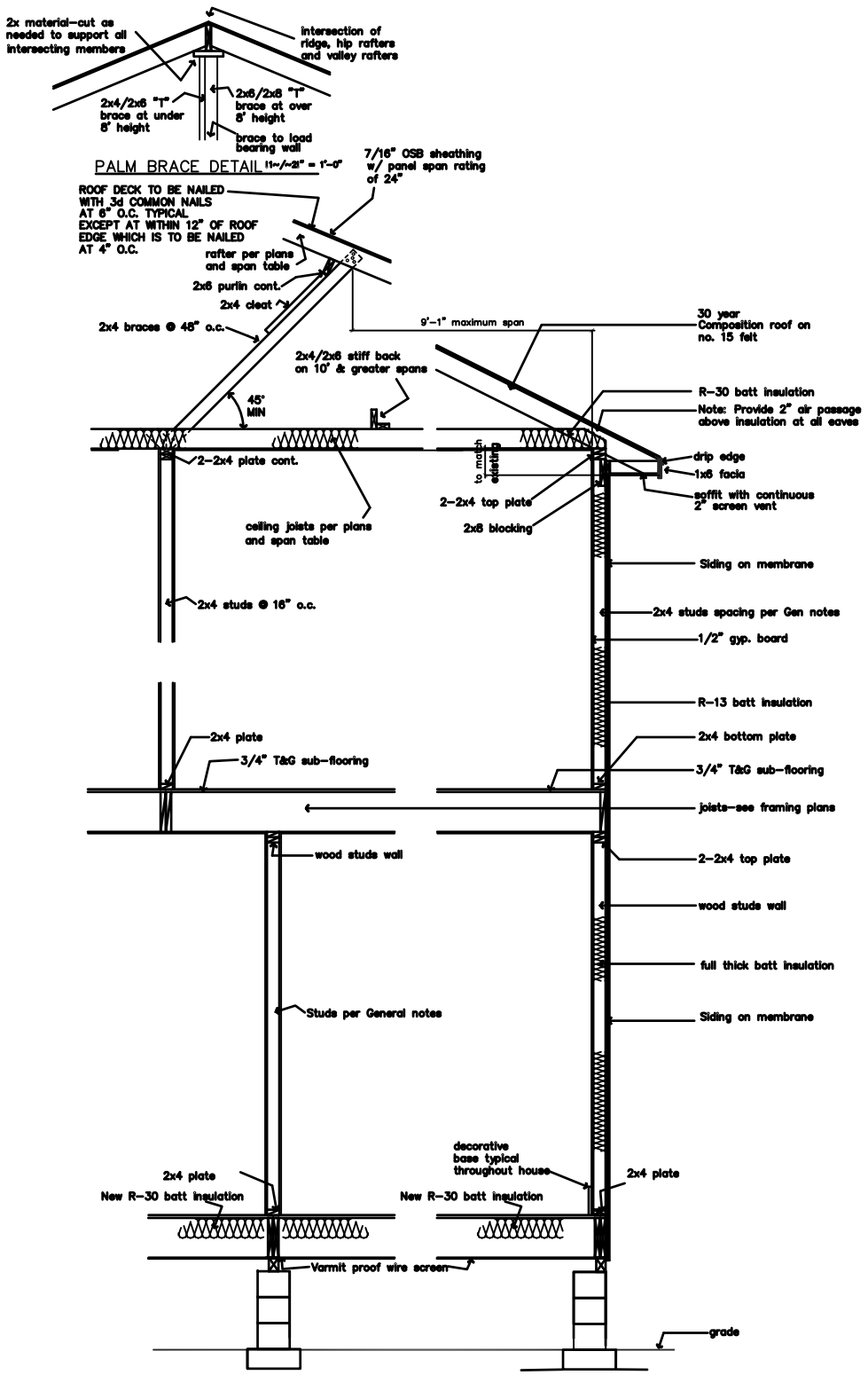

TYP. INTERIOR FRAMING
SCALE: 1/2"=1'-0"

SECTION @ SIDING
SCALE: 1/2"=1'-0"

ELEVATION NOTES:
ALL DRAWING HERE REFERENCES THE 2006 INTERNATIONAL RESIDENITIAL CODE (W/ AMENDMENTS) AND THE 2006 INTERNATIONAL BUILDING CODE (W/ AMENDMENTS).

DO NOT SCALE DRAWINGS. WRITTEN DIMENTIONS TAKE PRECEDENCE. CONTRACTOR TO VERIFY ABD BE RESPONSIBLE ALL DIMENSIONS AND CONDIDIONS.
ALL WRITTEN NOTES ON THESE DRAWINGS SHALL TAKE PRECEDENCE OVER THE MINIMUM STANDARD NOTES DETAILED ON THE LAST SHEET OF THIS DOCUMENT.
ALL BEDROOM WINDOW SILLS TO BE A MAXIMUM OF 44" ABOVE FINISHED FLOOR.
MINIMUM OPENINGS ARE 24" HIGH, 20" WIDE AND MIN. 5.7 SQ.FT. NET CLEAR OPENING.
ALL WINDOW HEAD HEIGHTS TAKEN FROM IMMEDITATE INTERIOR FLOOR LEVEL. HEAD HEIGHTS IN STAIRWELLS TAKEN FROM FIRST FLOOR LEVEL (AT THE STAIRWELL).
OPENINGS O A I HOUR FIRE RATED EXTERIOR WALL SHALL BE ROTECTED WITH AN ASSENBLY HAVING A FIRE-PROTECTION RATING OF NOT LESS THAN HOUR. SEE IBC 2000, SECT'S. 714.3.7 AND 714.3.9 AND TABLE 714.2 (EXTERIOR WALLS).
PENETRATIONS INTO OR THROUGH FIRE-RATED WALLS SHALL CINFORM WITH IBC 2000. SECT.7113. BUILDER TO DETERMINE FINAL MATERIAL AND PROVIDE APPROPRIATE TEST CRITERIA TO THE LOCAL AUTHORITY.
PROVIDE SAFETY GLAZING IN THESE HAZARDOUS LOCATIONS (SECT. R308.4).
A. GLAZING IN TUBE AND SHOWERS WHERE THE BOTTOM EDGE OF A PANE IS LESS THAN 60" FROM ANY WALKING SURFACE.
B. GLAZING IN SIDE HINGED DOORS EXCEPT JALOUSIES.
C. GLASING WITHIN 24" FROM A DOOR AND BOTTOM OF PANE IS LESS THAN 60" FROM THE FLOOR.
D.EXPOSED AREA OF AN INDIVIDUAL PANE GREATER THAN 9 SQ FT.
E. BOTTOM EDGE OF A PANE IS LESS THAN 18" FROM FLOOR/
F. TOP EDGE OF A PANE IS GREATER THAN 36" FROM FLOOR (WHEN BOTTOM OF THIS SAME PANE IS LOWER THAN 36" FROM THE FLOOR).
G. ONE OR MORE WALKING SURFACES WITHIN 36" HORIZONTALLY OF THE GLAZING.
H. GLAZING IN STAIRWELLS WHERE THE BOTTOM EDGE OF A PANE IS LESS THAN 60" VERTICALLY FROM ANY NOSING, AND 60" HORIZONTALLY FORM ANY STAIR NOSING, WHERE THE EDGE OF PANE IS LESS THAN 60" ABOVE THE FLOOR.

ALL RAILING (WOOD, METAL OR PRECAST) TO HAVE 4" MAXIMUM SPACING BETWEEN BALUSTERS (SPINDLES) AND TO CONFORM WITH IRC 2000 SECT. R316.
HANDRAILS AND GUARDRAILS SHALL BE DESIGNED FOR MINUMUM LIVE LOAD
A. INTERIOR GUARDS SHALL NOT BE CONSTRUCTED WITH HORIZONTAL RAILS OR OTHER ORNAMENTAL PATTERN THAT RESULTS IN A LADDER EFFECT (SECT.316.2).
B. EXTERIOR GUARDS TO HAVE RAILING NO LOWER THAN 42" FROM FINISHED FLOOR, WITH NO LESS THAN 36" DISTANCE FROM TOP OF GUARD TO BOTTOM OF LOWEST FUNNER MAXIMUM UNSUPPORTED SPAN OF LOWEST RUMMER SHALL BE 6"-0".
ROOF PLATE HEIGHS TAKEN FROM NOMINAL (FIRST) FLOOR (SLAB) LEVEL. U.O.N.
ALL BRICK OR PREFAB FIREPLACES TO BE BUILT AND INSTALLED PER IRC 2000 CHAPTER 10, AND BE U.L. AND I.C.B.O. APPROVED ("). A COPY OF THE MNUFACTURER INSTALLATION MANUAL WILL BE AVAILABLE ON SITE FOR INSPECTOR REVIEW.
CHIMNEYS TO BE A MINUMUM 2"-0" ABOVE ANY ROOF LINE WITHIN A 10"0" RADIUS, OR 3"-0" FROM ANY ROOF LINE (RIDGE), SEE IRC 2000 SECT. R1001.6. CHIMNEY PIPE(S) SHALL EXIT THROUGH THE ROOF DECKING INSIDE ALL BUILDING AND SETBACK LINES.
PROVIDE SPARK ARRESTORS AT CHIMNEY. MESH TO HAVE MAXIMUM GAP OF 1/2", MINIMUM GAP OF 3/8" AND TO COMPLY WITH IRC 2000 CHAPTER 10.
ALL GAS APPLIANCE VENTS TO EXIT AN EXTERIOR WALL LOCATED NO LESS THAN 4"-0" FROM ANY PROPERTY LINE OR COMMON WALL. DISTANCE OF GAS VENT PIPES THROUGH A EXTERIOR WALL PERPENDICULAR TO A PROPERY LINE OR COMMON WALL TO BE MINIMUM OF 4"-0" FROM THE PROPERTY LINE OR COMMON WALL.

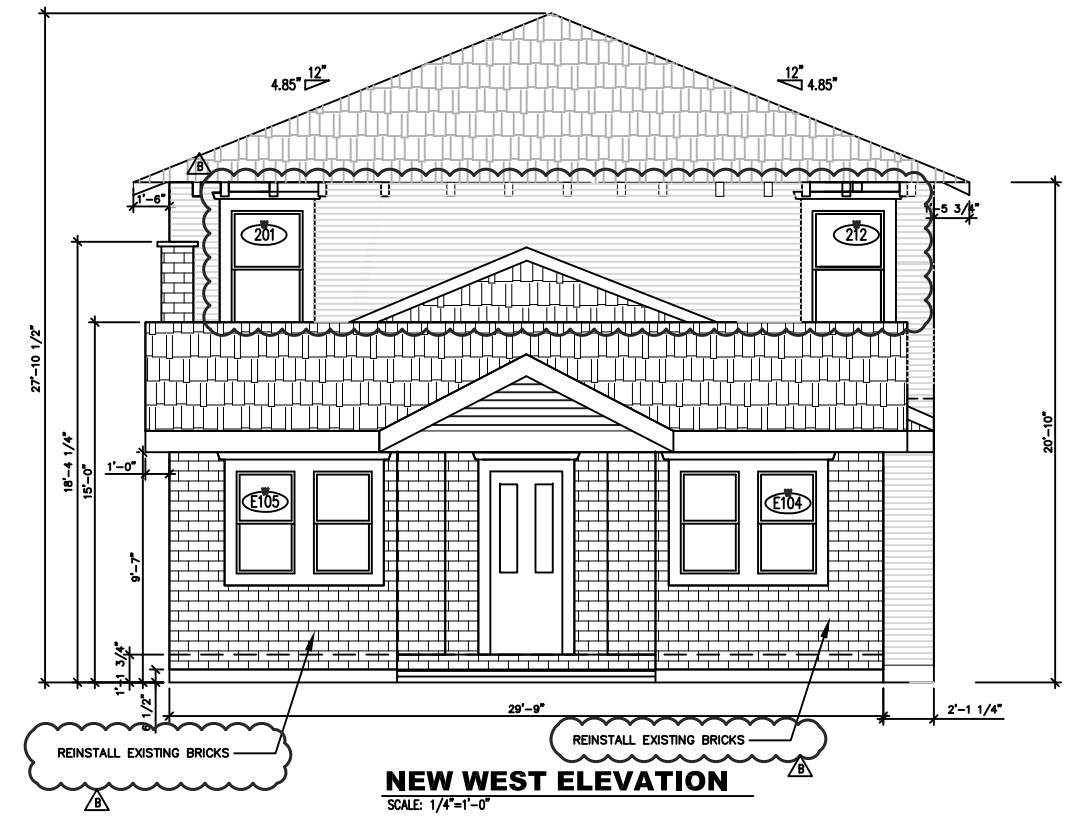

NEW WEST ELEVATION
SCALE: 1/4"=1'-0"

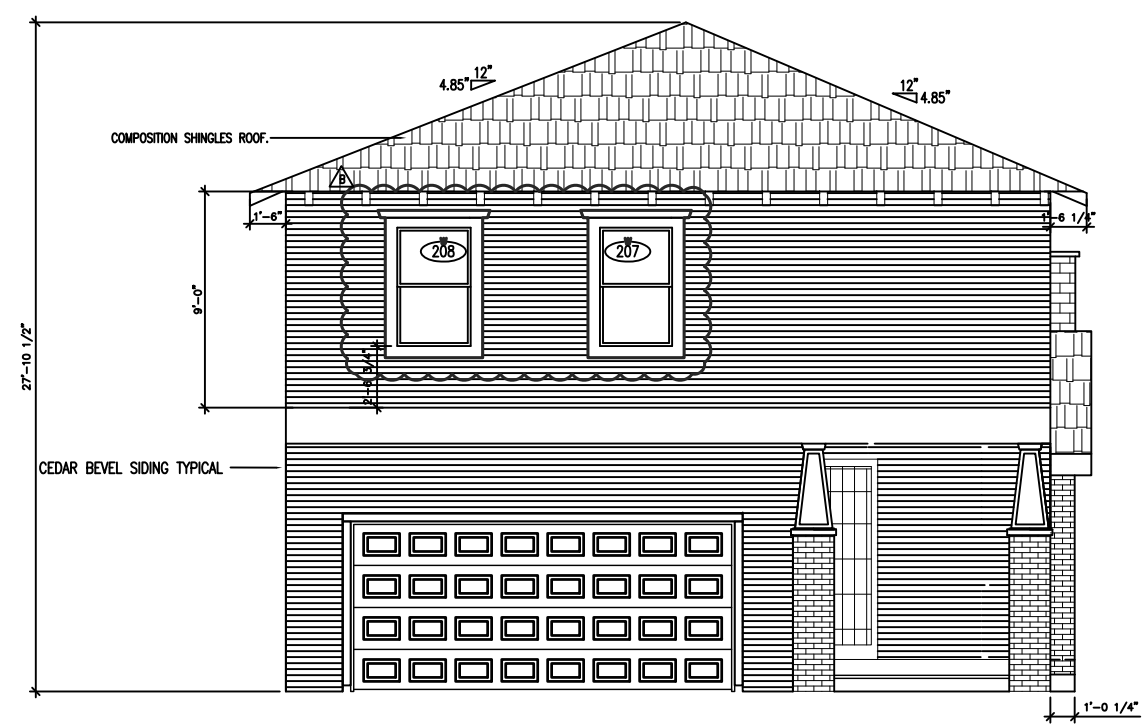

NEW EAST ELEVATION
SCALE: 1/4"=1'-0"

ORIGINAL DATE: OCTOBER-10-2014

REVISION NUMBER	REVISION DATE	REVISION BY
B	04-08-15	GS

638 HEIGHTS
HOUSTON TX. 77007

City/Jurisdiction
HOUSTON

ELEVATION PLAN

SHEET No:
A-6

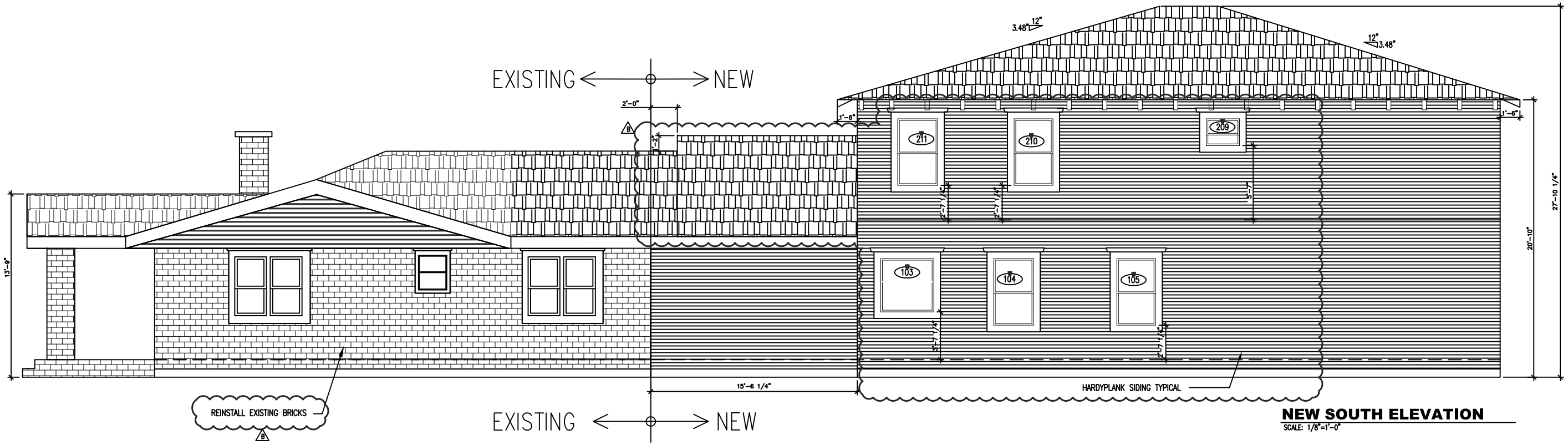

NEW SOUTH ELEVATION

SCALE: 1/8"=1'-0"

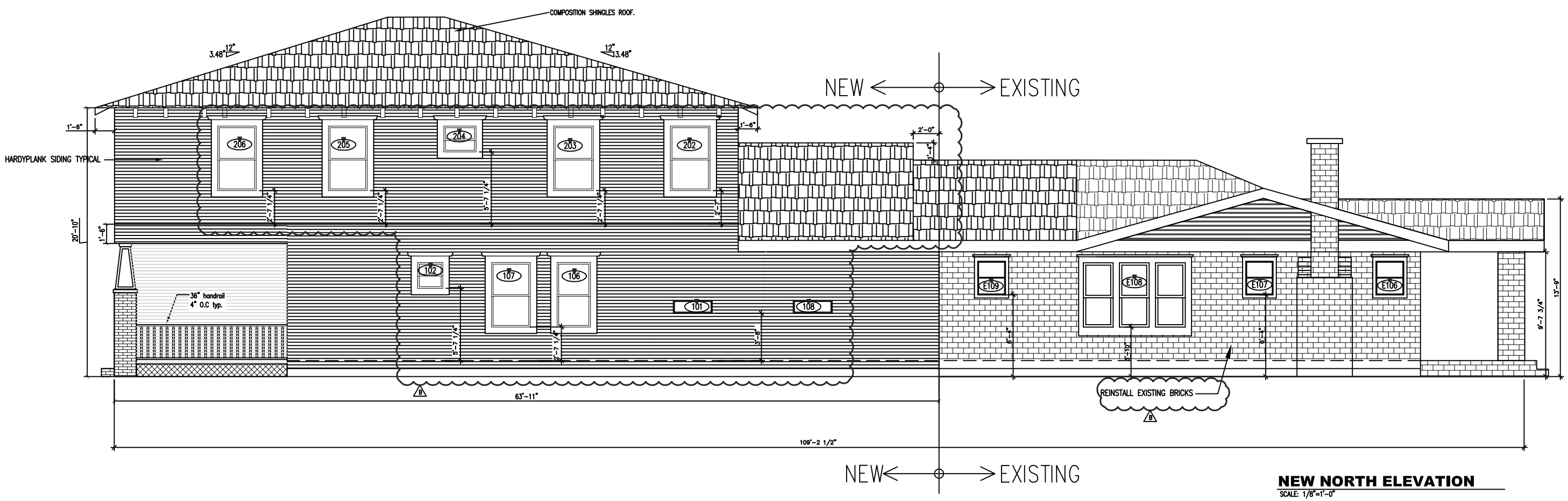

NEW NORTH ELEVATION

SCALE: 1/8"=1'-0"

ORIGINAL DATE: OCTOBER-10-2014

REVISION NUMBER	REVISION DATE	REVISION BY
B	04-08-15	GS

638 HEIGHTS
HOUSTON TX. 77007

City/Jurisdiction
HOUSTON

ELEVATION PLAN

SHEET No:

A-7

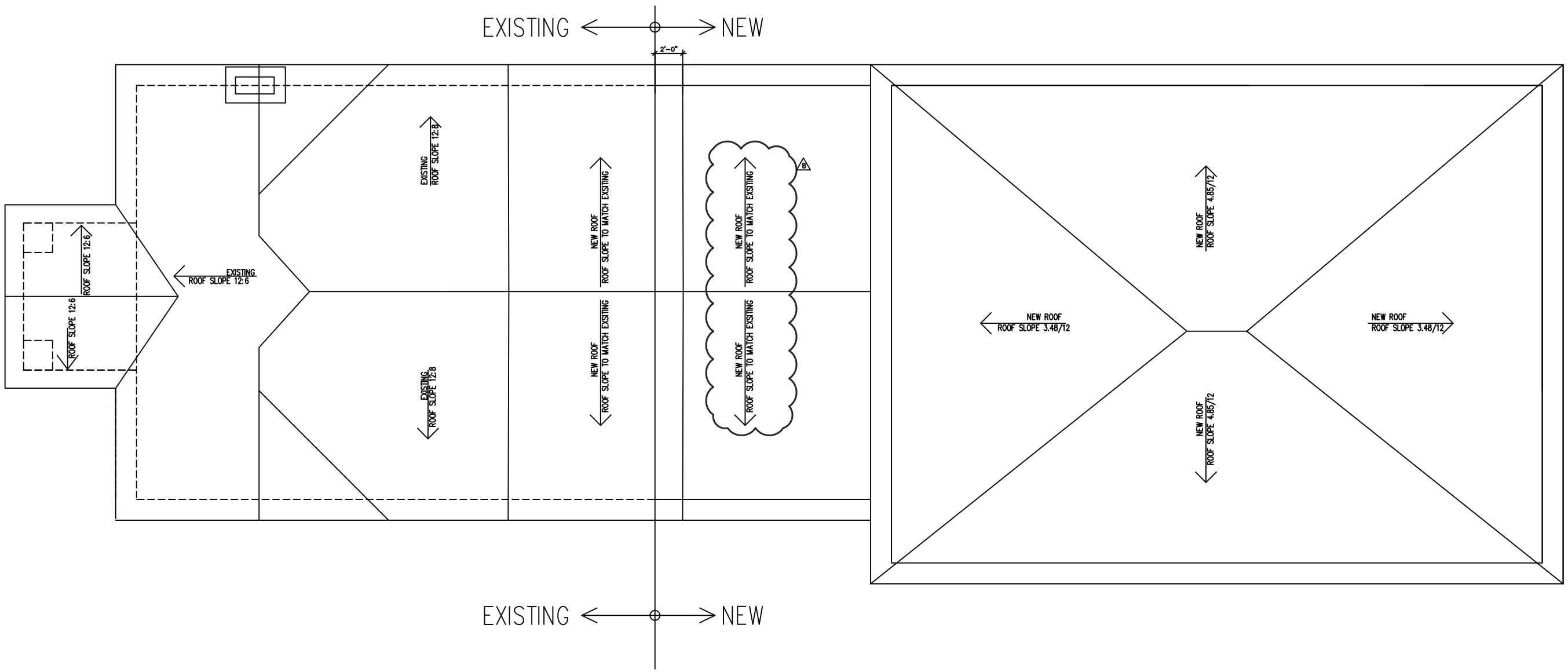

NEW ROOF PLAN
SCALE: 1/8"=1'-0"

ORIGINAL DATE: OCTOBER-10-2014

REVISION NUMBER	REVISION DATE	REVISION BY
B	04-08-15	GS

638 HEIGHTS
HOUSTON TX. 77007

City/Jurisdiction
HOUSTON

ROOF PLAN

SHEET No:
A-8

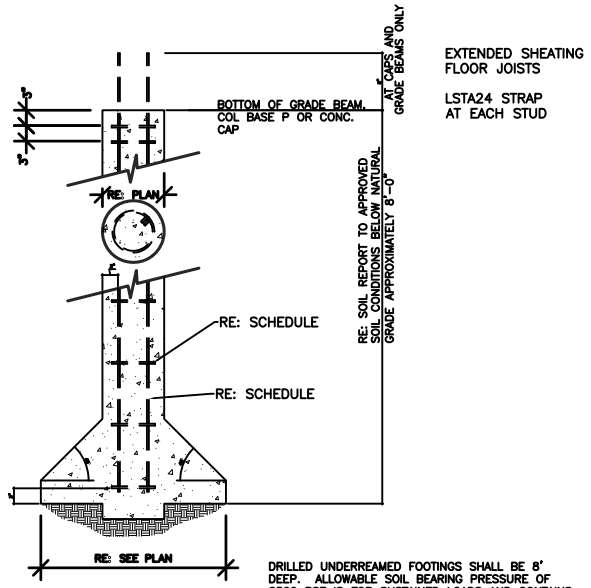

DRILLED UNDERREAMED FOOTINGS SHALL BE 8' DEEP. ALLOWABLE SOIL BEARING PRESSURE OF 2500 PSF IS FOR SUSTAINED LOADS AND CONTAINS AN APPLIED SAFETY FACTOR OF 2.0.

DRILLED FOOTING SCHEDULE

PIER		VERTICAL	HORIZONTAL
SHAFT	BELL	REINFORCING	TIES
12" ø	36" ø	4 – #4	#3 @ 8" O.C.

1 DETAIL – DRILLED PIER

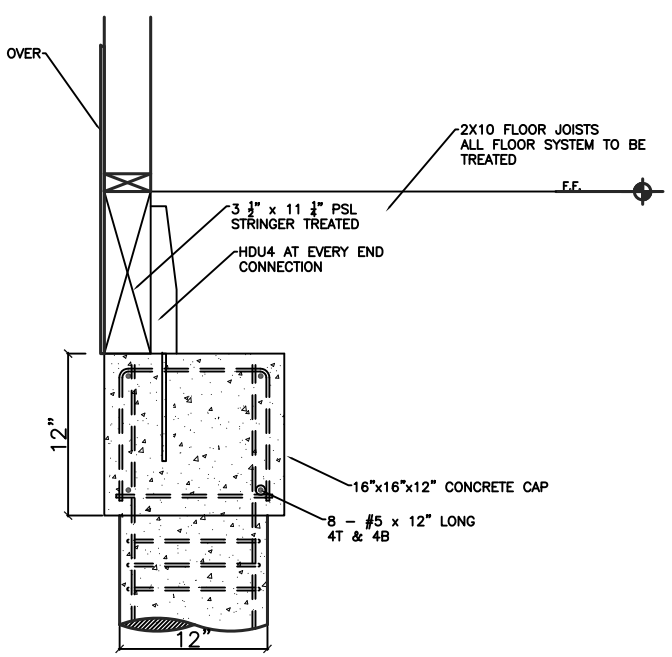

PROVIDE 16" X 16" PIER CAP AT ALL RE---REFINERY PIERS (TYP UNO) & EXTEND PIER REINFORCING INTO CAP

2 DETAIL @ POST CAP SECTION A–A

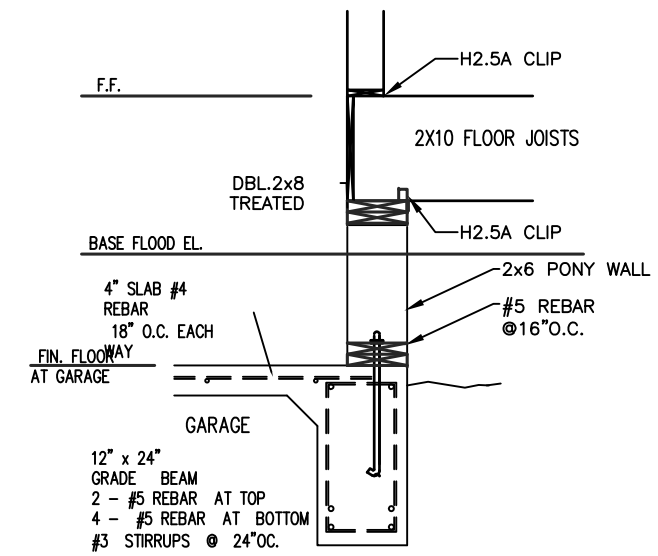

SECTION C–C

NOTE:
CONCRETE SHALL HAVE A MINIMUM COMPRESSIVE STRENGTH OF 2500 PSI. BOTTOM OF FOOTINGS TO BE A MINIMUM OF 10" BELOW NATURAL GRADE.

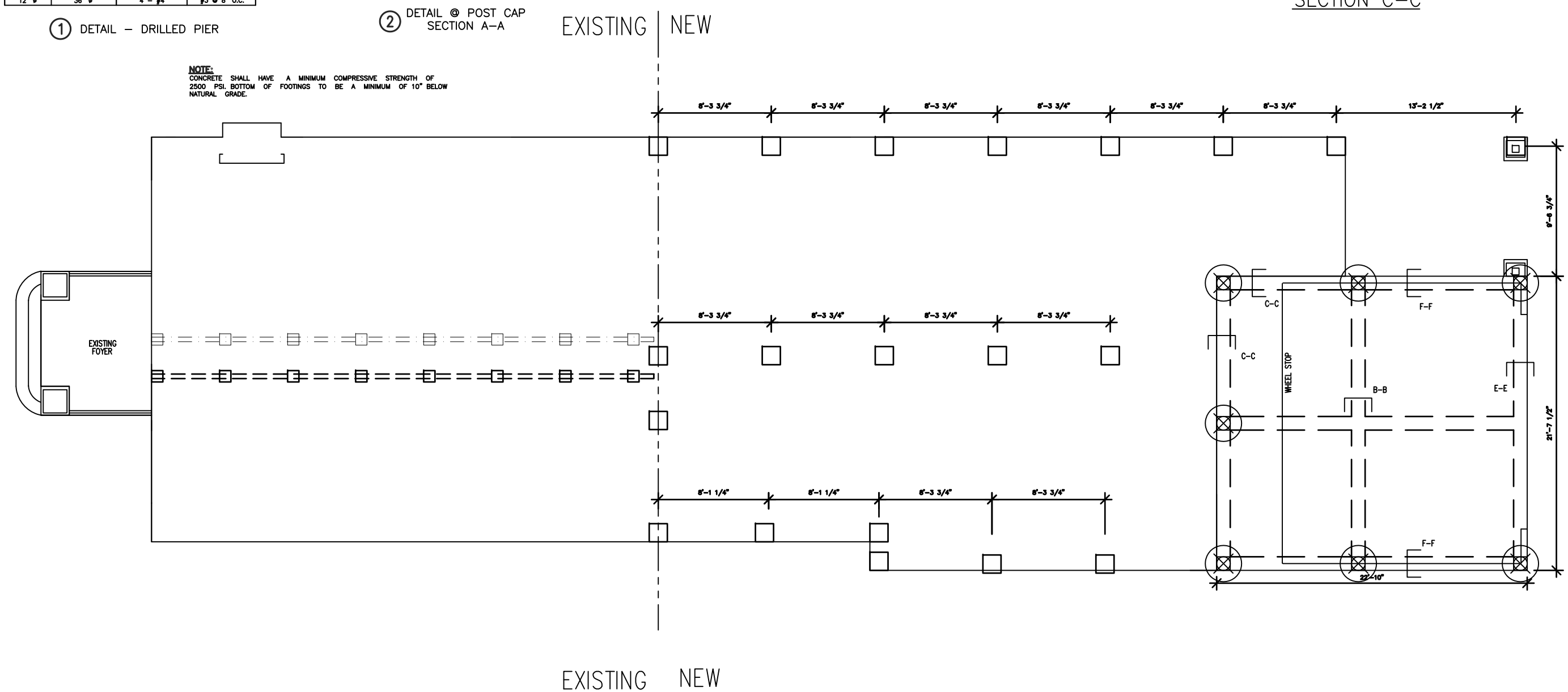

ORIGINAL DATE: NOV-24-2014

REVISION NUMBER	REVISION DATE	REVISION BY

638 HEIGHTS
HOUSTON TX. 77007

City/Jurisdiction
HOUSTON

FOUNDATION PLAN

SHEET No:
S-1

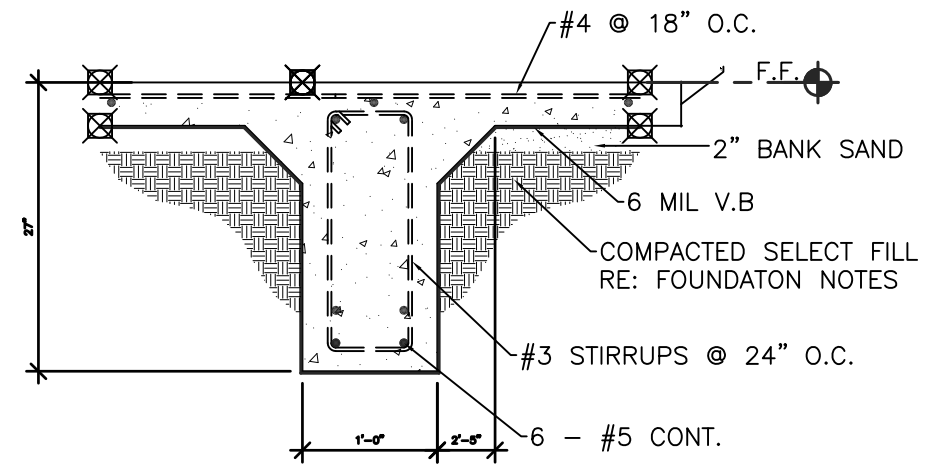

DETAIL @ INTERIOR BEAM | B–B

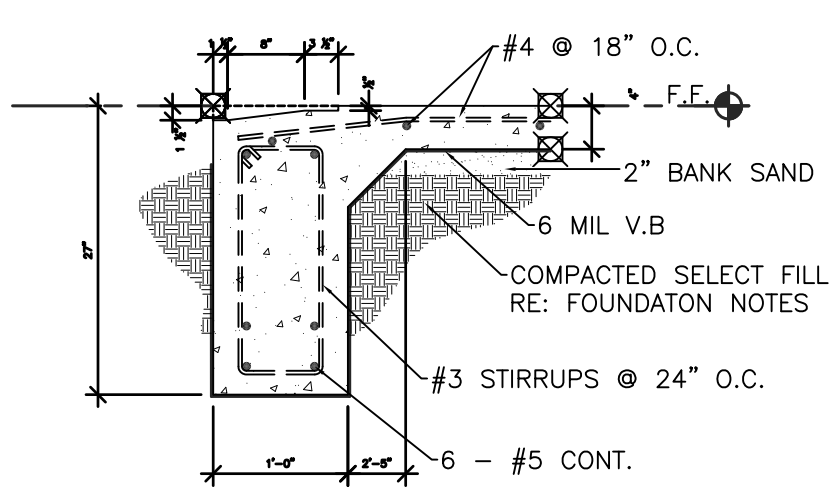

DETAIL @ O. H. DOOR | E–E

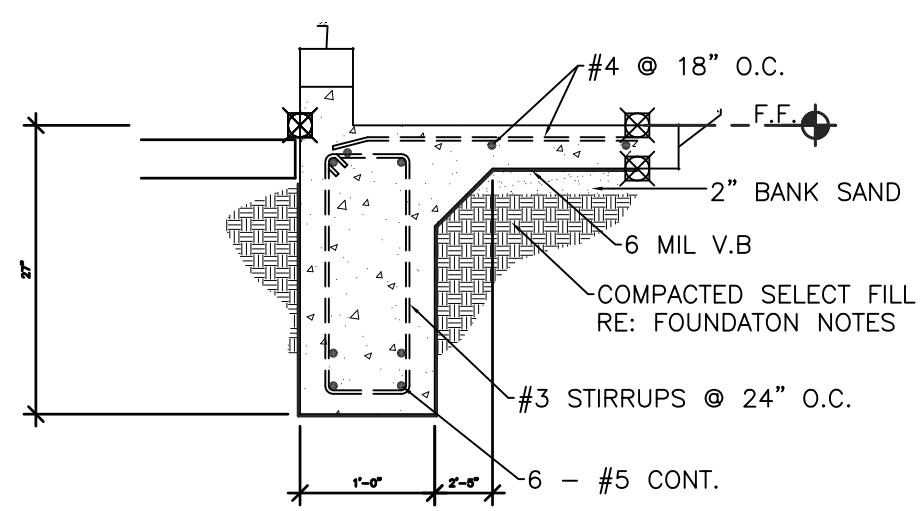

DETAIL @ PERIMETER GARAGE STEM WALL | F–F

ORIGINAL DATE: NOV-24-2014

REVISION NUMBER	REVISION DATE	REVISION BY

638 HEIGHTS
HOUSTON TX. 77007

City/Jurisdiction
HOUSTON

DETAILS

SHEET No:
S–2

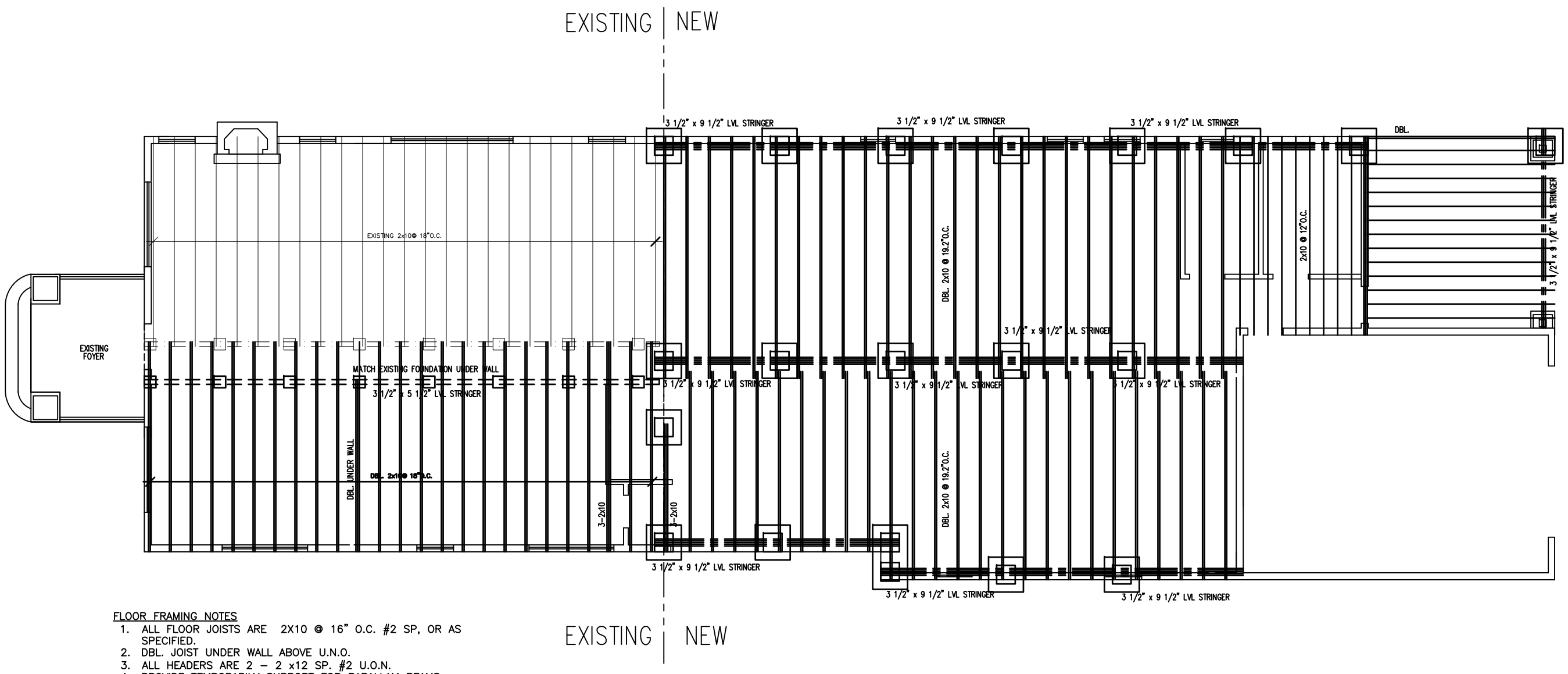

FLOOR FRAMING NOTES

1. ALL FLOOR JOISTS ARE 2X10 @ 16" O.C. #2 SP, OR AS SPECIFIED.
2. DBL. JOIST UNDER WALL ABOVE U.N.O.
3. ALL HEADERS ARE 2 – 2 x12 SP. #2 U.O.N.
4. PROVIDE TEMPORARILY SUPPORT FOR PARALLAM BEAMS.

ORIGINAL DATE: NOV-24-2014

REVISION NUMBER	REVISION DATE	REVISION BY

638 HEIGHTS
HOUSTON TX. 77007

City/Jurisdiction
HOUSTON

SUB–FLOOR PALN

SHEET No:
S–3

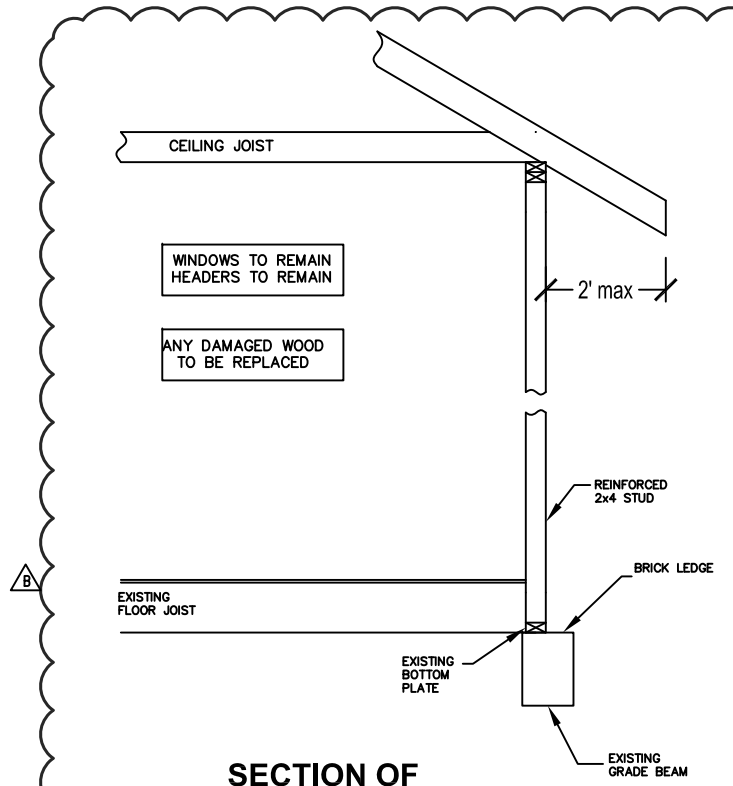

SECTION OF EXISTING WALL

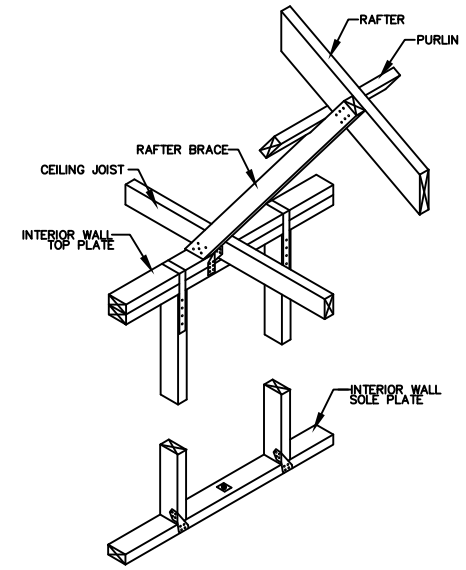

BRACING DETAIL

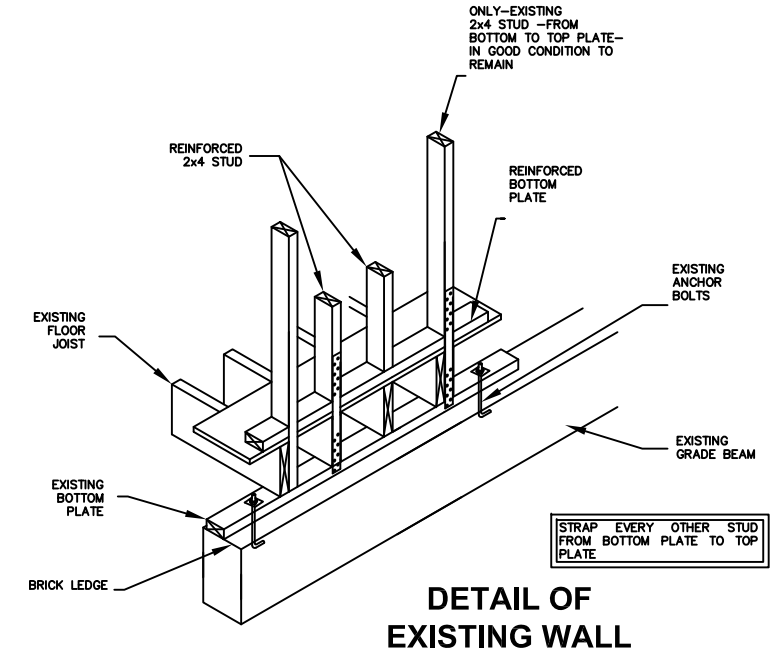

DETAIL OF EXISTING WALL

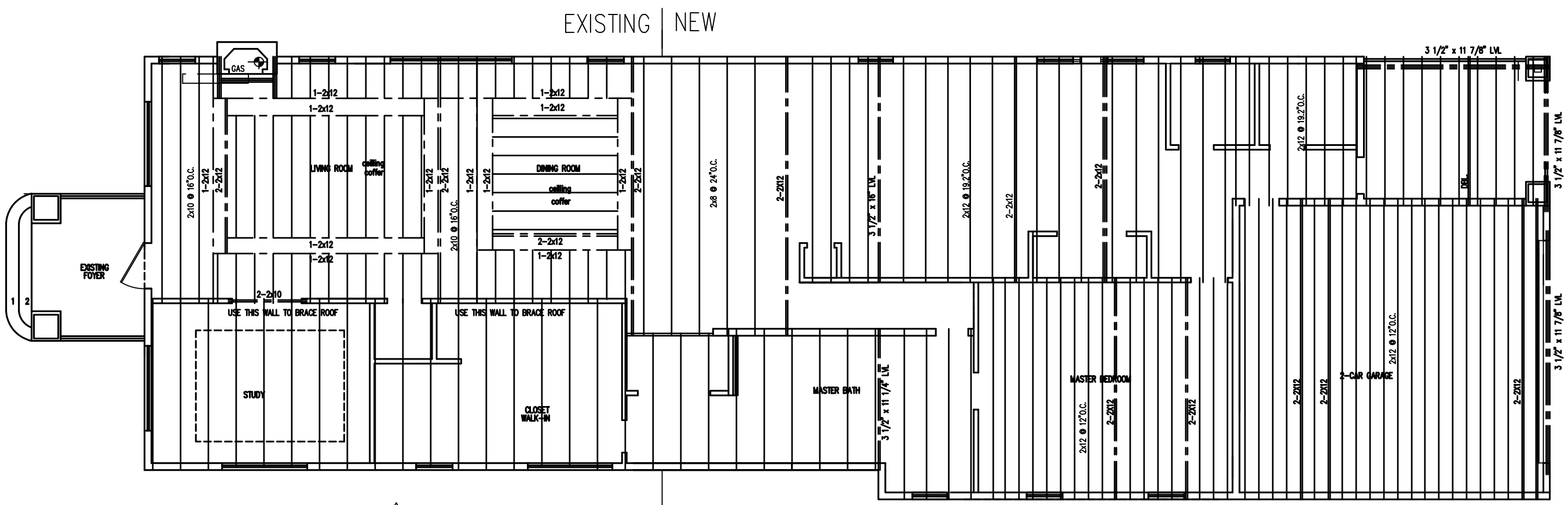

FLOOR FRAMING NOTES

1. ALL FLOOR JOISTS ARE 2X6 @ 24" O.C. #2 SP, OR AS SPECIFIED. B
2. DBL. JOIST UNDER WALL ABOVE U.N.O.
3. ALL HEADERS ARE 2 – 2 x12 SP. #2 U.O.N.
4. PROVIDE TEMPORARILY SUPPORT FOR PARALLAM BEAMS.

ORIGINAL DATE: NOV-24-2014

REVISION NUMBER	REVISION DATE	REVISION BY
B	04-08-15	GS

638 HEIGHTS
HOUSTON TX. 77007

City/Jurisdiction
HOUSTON

FIRST FLOOR FRAME

SHEET No:
S-4

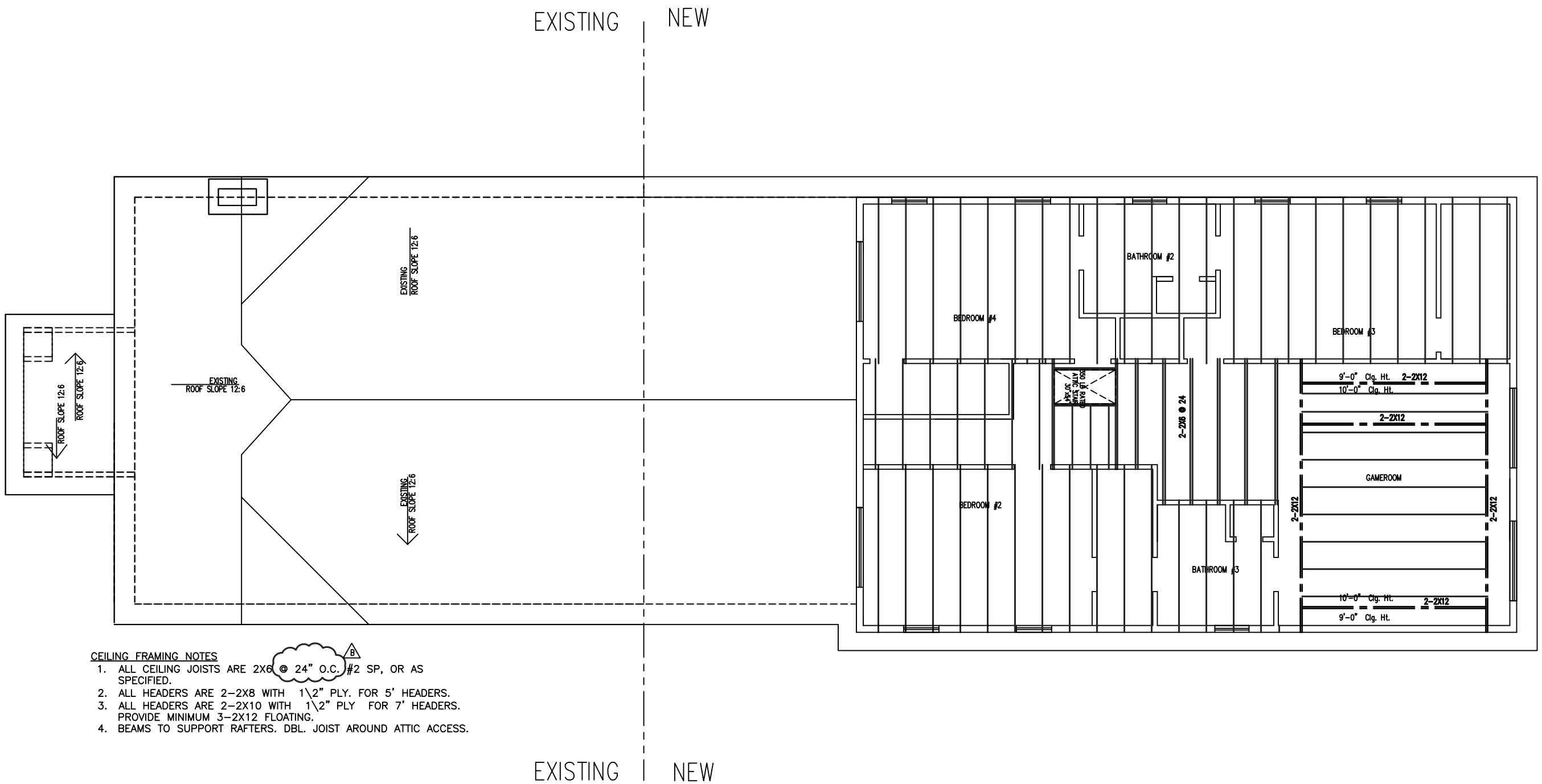

CEILING FRAMING NOTES

1. ALL CEILING JOISTS ARE 2X6 @ 24" O.C. #2 SP, OR AS SPECIFIED. B
2. ALL HEADERS ARE 2-2X8 WITH 1\2" PLY. FOR 5' HEADERS.
3. ALL HEADERS ARE 2-2X10 WITH 1\2" PLY FOR 7' HEADERS. PROVIDE MINIMUM 3-2X12 FLOATING.
4. BEAMS TO SUPPORT RAFTERS. DBL. JOIST AROUND ATTIC ACCESS.

ORIGINAL DATE: NOV-24-2014

REVISION NUMBER	REVISION DATE	REVISION BY
B	04-08-15	GS

638 HEIGHTS
HOUSTON TX. 77007

City/Jurisdiction
HOUSTON

SECOND FLOOR FRAME

SHEET No:
S-5

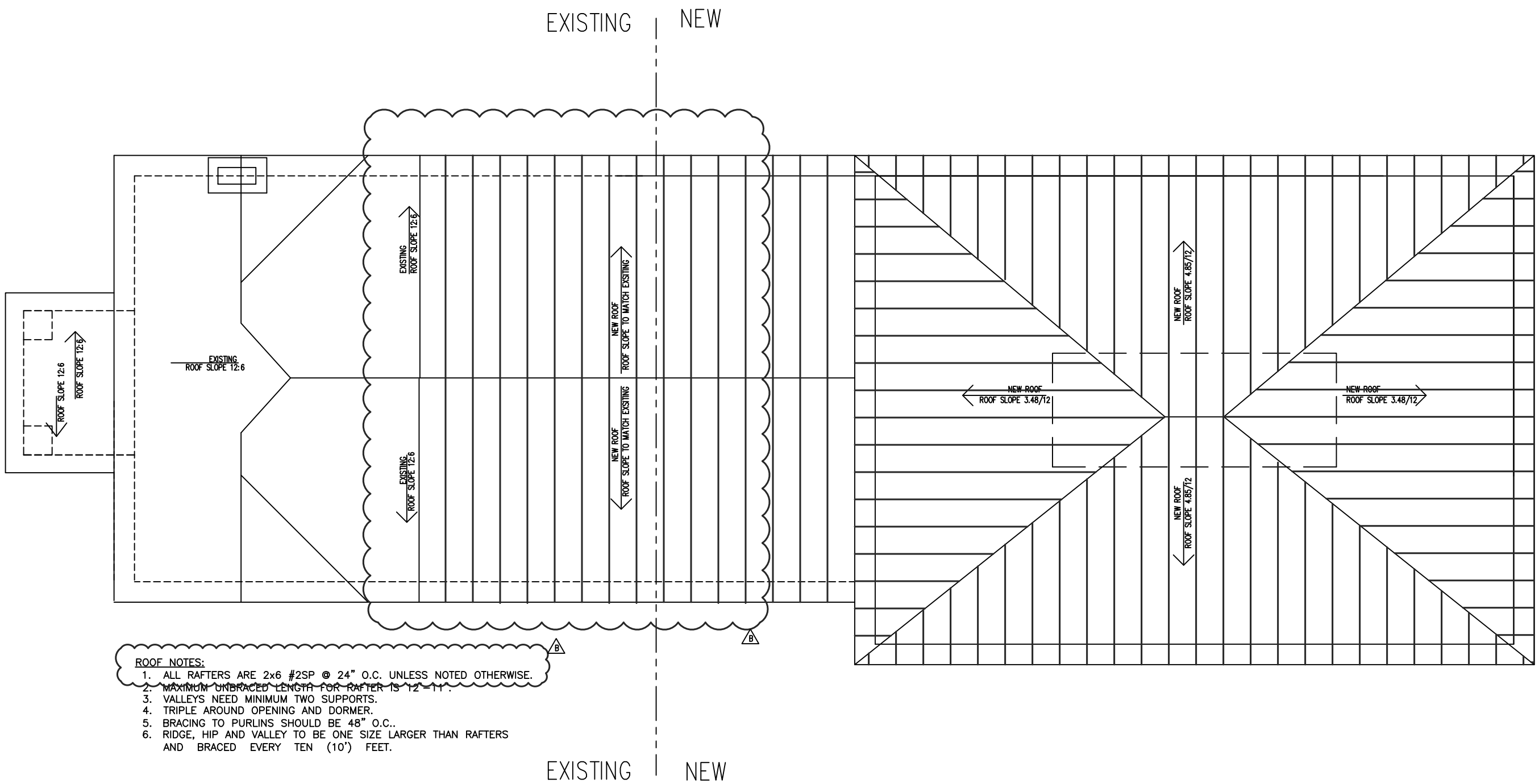

ROOF NOTES:

1. ALL RAFTERS ARE 2x6 #2SP @ 24" O.C. UNLESS NOTED OTHERWISE.
2. MAXIMUM UNBRACED LENGTH FOR RAFTER IS 12'-11".
3. VALLEYS NEED MINIMUM TWO SUPPORTS.
4. TRIPLE AROUND OPENING AND DORMER.
5. BRACING TO PURLINS SHOULD BE 48" O.C..
6. RIDGE, HIP AND VALLEY TO BE ONE SIZE LARGER THAN RAFTERS AND BRACED EVERY TEN (10') FEET.

ORIGINAL DATE: NOV-24-2014

REVISION NUMBER	REVISION DATE	REVISION BY
B	04-08-15	GS

638 HEIGHTS
HOUSTON TX. 77007

HOUSTON
City/Jurisdiction
HOUSTON

ROOF PLAN

SHEET No:
S-6

GENERAL NOTES– SITE WORK

1. SITE PREPARATION BENEATH THE SLAB SHALL BE IN ACCORDANCE WITH THE SOILS REPORT RECOMMENDATIONS (IF AVAILABLE) AND SHALL MEET THE FOLLOWING MINIMUM REQUIREMENTS:
   - 1.A. STRIP ALL VEGETATION DOWN TO NATURAL SOIL. REMOVE ALL TREES WITHIN A CLOSE PROXIMITY TO THE FOUNDATION.
   - 1.B. PROOF–ROLL EXPOSED SUBGRADE. BACK FILL AND COMPACT TREE–HOLES OR SOFT POCKETS WITH MATERIAL SIMILAR TO THE EXISTING SITE MATERIALS.
   - 1.C. BRING SUB GRADE TO REQUIRED ELEVATION WITH SELECT FILL MATERIAL. SELECT FILL SHALL BE SANDY CLAY OR SAND, FREE OF ORGANIC MATERIAL, HAVING A PLASTICITY INDEX GREATER THAN 7 BUT LESS THAN 20
   - 1.D. FILL SHALL BE PLACED IN MAXIMUM 8" LIFTS AND COMPACTED TO 95 % OF IT'S MAXIMUM DRY DENSITY AS DETERMINED BY ASTM D698 (STANDARD PROCTOR). WHERE LARGE DEPTHS OF FILL OCCUR, FIELD DENSITY TESTS ARE REQUIRED FOR EACH LIFT LOCATED AT OR BELOW THE BOTTOM OF THE SLAB.
2. THE TWO INCH LEVELING BED SHALL BE FIRM STABLE BANK SAND OR OTHER CLEAN GRANULAR MATERIAL.
3. INITIAL SITE GRADING SHALL BE COMPLETED PRIOR TO SETTING FORMS. FINAL GRADE SHALL SLOPE AWAY FROM THE FOUNDATION 1 INCH/FOOT FOR THE FIRST 5 FEET SUCH THAT POSITIVE DRAINAGE AWAY FROM THE SLAB IS ASSURED.
4. DURING CONSTRUCTION A DRAINAGE TRENCH SHALL BE FORMED SUCH THAT ANY WATER WHICH INTRUDES INTO THE FOUNDATION WILL IMMEDIATELY DRAIN OUT OF THE BOTTOM OF THE BEAMS.
5. IF A SOIL REPORT CONTAINING FOUNDATION DESIGN RECOMMENDATIONS WAS SUPPLIED FOR THIS PROJECT, THE SOIL REPORT SHALL CONTROL IF A CONFLICT OCCURS BETWEEN THESE MIN. REQUIREMENTS AND THE SOIL ENGINEER'S RECOMMENDATIONS.

GENERAL NOTES– CONCRETE

1. CONCRETE SHALL BE SUPPLIED AND CONSTRUCTED IN ACCORDANCE WITH AC1–318 LATEST EDITION AND SHALL HAVE A MINIMUM 28–DAY COMPRESSIVE STRENGTH OF 3000 PSI.
2. WATER SHALL NOT BE ADDED TO CONCRETE AT THE JOB SITE UNLESS APPROVED BY THE ENGINEER. IF MORE WORKABILITY IS NEEDED CONTRACTOR SHALL SPECIFY REQUIRED SLUMP ON JOB ORDER. CONCRETE PLANT CAN INCREASE WORKABILITY BY ADDING UP TO 1.5% AIR–ENTRAINMENT, ADDITIONAL CEMENT, OR OTHER APPROVED ADMIXTURES.
3. CALCIUM CHLORIDE OR ADMIXTURES CONTAINING CALCIUM CHLORIDE SHALL NOT BE USED AS ADDITIVES. WHERE FLY ASH IS USED, ONLY TYPE C FLY ASH SHALL BE ACCEPTED.
4. CONCRETE SHALL NOT BE PLACED AT TEMPERATURES BELOW 40 DEGREES F, IN RAINY WEATHER OR IN OTHER ADVERSE WEATHER CONDITIONS.
5. CONCRETE SHALL BE WELL CONSOLIDATED, ESPECIALLY IN THE VICINITY OF TENDON ANCHORAGES AND/OR AROUND REINFORCING BARS.
6. A 6 MIL POLYETHYLENE VAPOR BARRIER SHALL BE PLACED UNDER ALL SLABS, ALL LAPS SHALL BE TAPED.
7. FORMS TO BE STRIPPED NO LESS THAN 24 HOURS AND NO MORE THAN 6 DAYS AFTER PLACEMENT OF CONCRETE
8. CURE ALL SLABS WITH CHEMICAL CURING COMPOUND OR KEEP MOIST FOR 7 DAYS AFTER PLACEMENT.
9. BUILDER SHALL VERIFY ALL DIMENSIONS, DROPS, OFFSETS, BRICK LEDGES, INSERTS AND OPENINGS WITH ARCHITECTURAL DRAWINGS.

GENERAL NOTES– DESIGN

1. THIS FOUNDATION IS DESIGNED IN ACCORDANCE WITH CURRENT ACCEPTABLE ENGINEERING PRACTICES FOR THE SITE SHOWN ON THE PLANS AND MAY NOT BE USED IN ANY OTHER LOCATION.
2. AS WITH ALL GROUND SUPPORTED SLABS, THIS FOUNDATION IS DESIGNED TO MOVE WITH UNDERLYING SOILS WHILE SUSTAINING A CALCULATED AMOUNT OF FLEXURE. IT MAY ALSO SUSTAIN NORMAL TEMPERATURE AND SHRINKAGE CRACKS AS A RESULT OF THE CONCRETE CURING PROCESS.
3. THE DESIGN IS BASED ON THE FOLLOWING ASSUMPTIONS:
   - 3.A. FINAL GRADING IS COMPLETED AS OUTLINED IN THE GENERAL NOTES–SITEWORK.
   - 3.B. FINAL GRADE AND A FAIRLY UNIFORM MOISTURE LEVEL IS MAINTAINED FOR THE LIFE OF THE FOUNDATION.
   - 3.C. THE FOUNDATION IS NOT INSTALLED DURING A DRY OR WET PERIOD WHICH IS CONSIDERED EXTREME OR ABNORMAL FOR THE AREA. IF SUCH IS THE CASE, BUILDER SHALL NOTIFY THE ENGINEER FOR A POSSIBLE RE–DESIGN.
   - 3.D. A SLAB ON GRADE FOUNDATION MAY NOT BE USED IF EXISTING SITE SLOPE IS GREATER THAN 10%. IF SUCH IS THE CASE, BUILDER SHALL NOTIFY THE ENGINEER PRIOR TO TRENCHING FOR A POSSIBLE RE–DESIGN.
4. NO SITE SPECIFIC SOIL REPORT PROVIDED FOR THIS PROJECT. IF THERE ARE ANY UNUSUAL CONDITIONS SUCH AS TREE REMOVAL, DRAINAGE SWALES/DITCHES, TREE LINES OR EXCESSIVE FILL HAS BEEN ADDED TO THE SITE, THEN THE DESIGN ENGINEER SHOULD BE NOTIFIED IMMEDIATELY. A REVIEW OF THE EFFECTS OF THESE ANOMALIES ON THE PERFORMANCE OF THE DESIGNED FOUNDATION WILL BE REQUIRED. IT MAY BE NECESSARY TO INCREASE THE STIFFNESS OF THE FOUNDATION AS A RESULT OF THE MORE EXTREME SOIL CONDITIONS.

GENERAL NOTES– MISCELLANEOUS & LIMITATIONS

1. THIS FOUNDATION IS DESIGNED IN ACCORDANCE WITH CURRENT NOREX ENGINEERING PRACTICES AND ADVISES THE BUILDER AND ALL CLIENTS THAT INSPECTION SERVICES ARE AVAILABLE PRIOR TO CONCRETE POUR AND DURING THE POUR. IF THESE INSPECTIONS ARE NOT PERFORMED BY NOREX, THEN NOREX ACCEPTS NO RESPONSIBILITY WHATSOEVER FOR THE PROPER IMPLEMENTATION OF ITS PLANS AND SPECIFICATIONS PROVIDED BY IT ARE FOLLOWED.
2. IN THE EVENT A SOILS REPORT ON THE SPECIFIC TRACT OF LAND UPON WHICH THE PROPOSED STRUCTURE IS TO BE CONSTRUCTED IS PROVIDED BY THE CLIENT TO NOREX, NOREX WILL RELY ON THE INFORMATION CONTAINED IN THIS SOILS REPORT IN DESIGNING PLANS AND SPECIFICATIONS FOR THE CLIENT. HOWEVER, NOREX DOES NOT ASSUME OR TAKE RESPONSIBILITY IN ANY WAY FOR THE ACCURACY OF THE SOILS REPORT PROVIDED OR ANY INFORMATION CONTAINED THEREIN WHICH MAY BE RELIED UPON BY NOREX IN DESIGNING THE FOUNDATION FOR THE PROPOSED STRUCTURE.
3. WARNINGS:
   - 3.A. THE OWNER MUST INSURE THAT THE MOISTURE CONTENT OF THE SOIL IS MAINTAINED AT A CONSISTENT LEVEL. DRAINAGE SHOULD BE MAINTAINED SUCH THAT THE PONDING OF WATER DOES NOT DEVELOP. IF WATER IS PONDING, THE BUILDER SHOULD BE CONTACTED TO IMPROVE DRAINAGE.
   - 3.B. THE OWNER SHOULD NOT PLANT TREES ADJACENT TO THE SLAB SUCH THAT THE ROOT SYSTEMS CAN UNDERMINE THE FOUNDATION.
   - 3.C. THE OWNER SHOULD CONTINUOUSLY INSPECT THE FOUNDATION PERIMETER OF THE BUILDING DURING HOT AND DRY PERIODS TO ENSURE THAT ADEQUATE WATERING IS BEING PERFORMED.

ORIGINAL DATE: NOV–24–2014

REVISION NUMBER	REVISION DATE	REVISION BY

638 HEIGHTS
HOUSTON TX. 77007

City/Jurisdiction
HOUSTON

FOUNDATION NOTES

SHEET No:
S–7

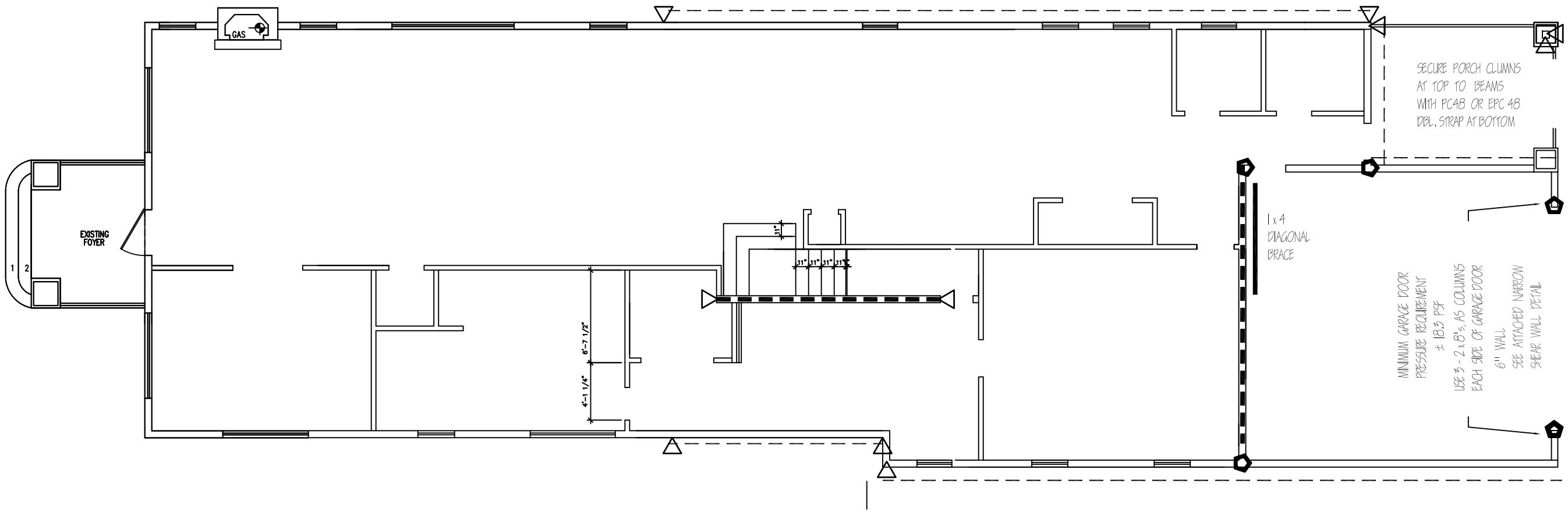

110 MPH EXPOSURE B

1 of 2

COMPONENTS AND CLADDING PRESSURES EXPOSURE B		
	CORNER	INTERIOR
110 MPH	- 28.2 psf	- 23.1 psf

ALL DOORS AND WINDOWS, INCLUDING OVERHEAD GARAGE DOORS AND SKYLIGHTS MUST COMPLY WITH THE 2006 IRC, SECTION R613.3 OR 2009 IRC, SECTION R612.5 & 2012 IRC SECTION R612.2 DESIGN WIND PRESSURE REQUIREMENTS. SEE ATTACHED TABLE.

PERIMETER AND INTERIOR SHEAR WALL BOTTOM PLATES MUST BE FASTENED TO BEAM/WALL/JOIST BELOW WITH 3 - 12d NAILS @ 16" O.C.

SHEATING MATERIAL	THICKNESS	FASTENER	SPACING EDGE	SPACING FIELD
OSB	7/16"	8d	4"	12"

BLOCK AND NAIL ALL HORIZONTAL SHEATHING JOINTS.

SHEATING MATERIAL	THICKNESS	FASTENER	SPACING EDGE	SPACING FIELD
BLUE THERMO PLY	0.137"	*	3"	6"

* 1" x 11/4" x 16 GAGE STAPLE

DECKING MATERIAL	THICKNESS	FASTENER	SPACING EDGE	SPACING FIELD
OSB	7/16"	8d	6"	8"

- 1/2" x 10" ANCHOR BOLTS OR DOUBLE MUD SILL ANCHORS 12" FROM ALL PERIMETER CORNERS AND AT LOCATIONS SPECIFIED. CLIP WALL STUDS, TOP AND BOTTOM AT THESE LOCATIONS.
- ADD STHD14/SSAD10 FOUNDATION ANCHORS AT THESE LOCATIONS.
- ADD HTS/WAH16 FOUNDATION ANCHORS AT THESE LOCATIONS.
- DOUBLE CLIP WALL STUDS, TOP AND BOTTOM AT THESE LOCATIONS
- DOUBLE STRAP BETWEEN FLOORS AT THESE LOCATIONS

ORIGINAL DATE: NOV-24-2014

REVISION NUMBER	REVISION DATE	REVISION BY

638 HEIGHTS
HOUSTON TX. 77007

City/Jurisdiction
HOUSTON

WINDSTORM PLAN

SHEET No:
WL-1

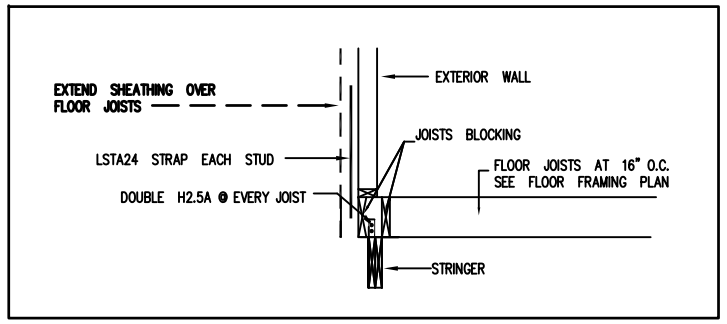

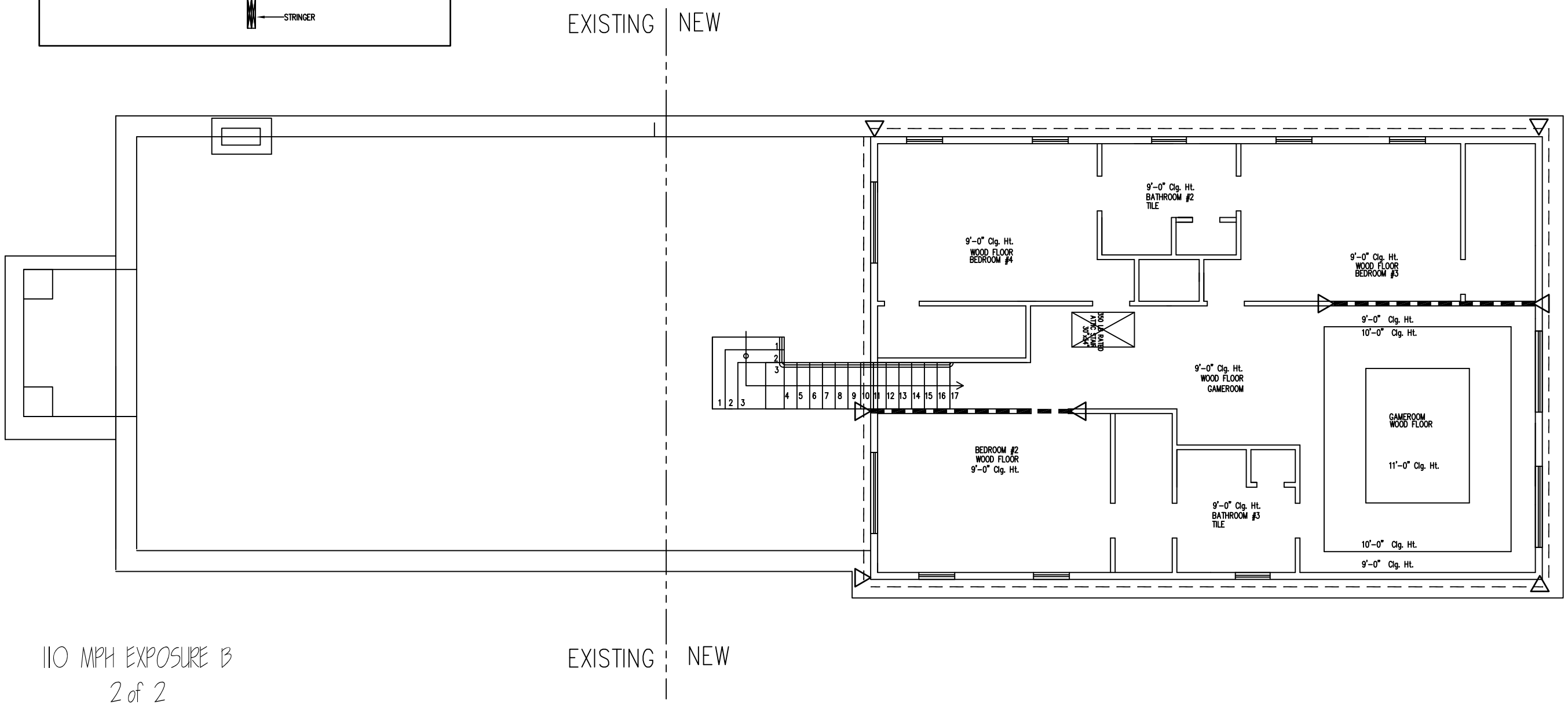

110 MPH EXPOSURE B
2 of 2

COMPONENTS AND CLADDING PRESSURES EXPOSURE B		
	CORNER	INTERIOR
110 MPH	- 28.2 psf	- 23.1 psf

ALL DOORS AND WINDOWS, INCLUDING OVERHEAD GARAGE DOORS AND SKYLIGHTS MUST COMPLY WITH THE 2006 IRC, SECTION R613.3 OR 2009 IRC, SECTION R612.5 & 2012 IRC SECTION R612.2 DESIGN WIND PRESSURE REQUIREMENTS. SEE ATTACHED TABLE.

PERIMETER AND INTERIOR SHEAR WALL BOTTOM PLATES MUST BE FASTENED TO BEAM/WALL/JOIST BELOW WITH 3 - 12d NAILS @16" O.C.

SHEATHING MATERIAL	THICKNESS	FASTENER	SPACING EDGE	SPACING FIELD
OSB	7/16"	8d	4"	12"

BLOCK AND NAIL ALL HORIZONTAL SHEATHING JOINTS.

SHEATHING MATERIAL	THICKNESS	FASTENER	SPACING EDGE	SPACING FIELD
BLUE THERMO PLY	0.157"	*	3"	6"

* 1" x 11/4" x 16 GAGE STAPLE

DECKING MATERIAL	THICKNESS	FASTENER	SPACING EDGE	SPACING FIELD
OSB	7/16"	8d	6"	8"

- 1/2" x 10" ANCHOR BOLTS OR DOUBLE MUD SILL ANCHORS 12" FROM ALL PERIMETER CORNERS AND AT LOCATIONS SPECIFIED. CLIP WALL STUDS, TOP AND BOTTOM AT THESE LOCATIONS.
- ADD STHD14/SSAD10 FOUNDATION ANCHORS AT THESE LOCATIONS.
- ADD HTT5/WAH16 FOUNDATION ANCHORS AT THESE LOCATIONS.
- DOUBLE CLIP WALL STUDS, TOP AND BOTTOM AT THESE LOCATIONS
- DOUBLE STRAP BETWEEN FLOORS AT THESE LOCATIONS

ORIGINAL DATE: NOV-24-2014

REVISION NUMBER	REVISION DATE	REVISION BY

638 HEIGHTS
HOUSTON TX. 77007

City/Jurisdiction
HOUSTON

WINDSTORM PLAN

SHEET No:
WL-2

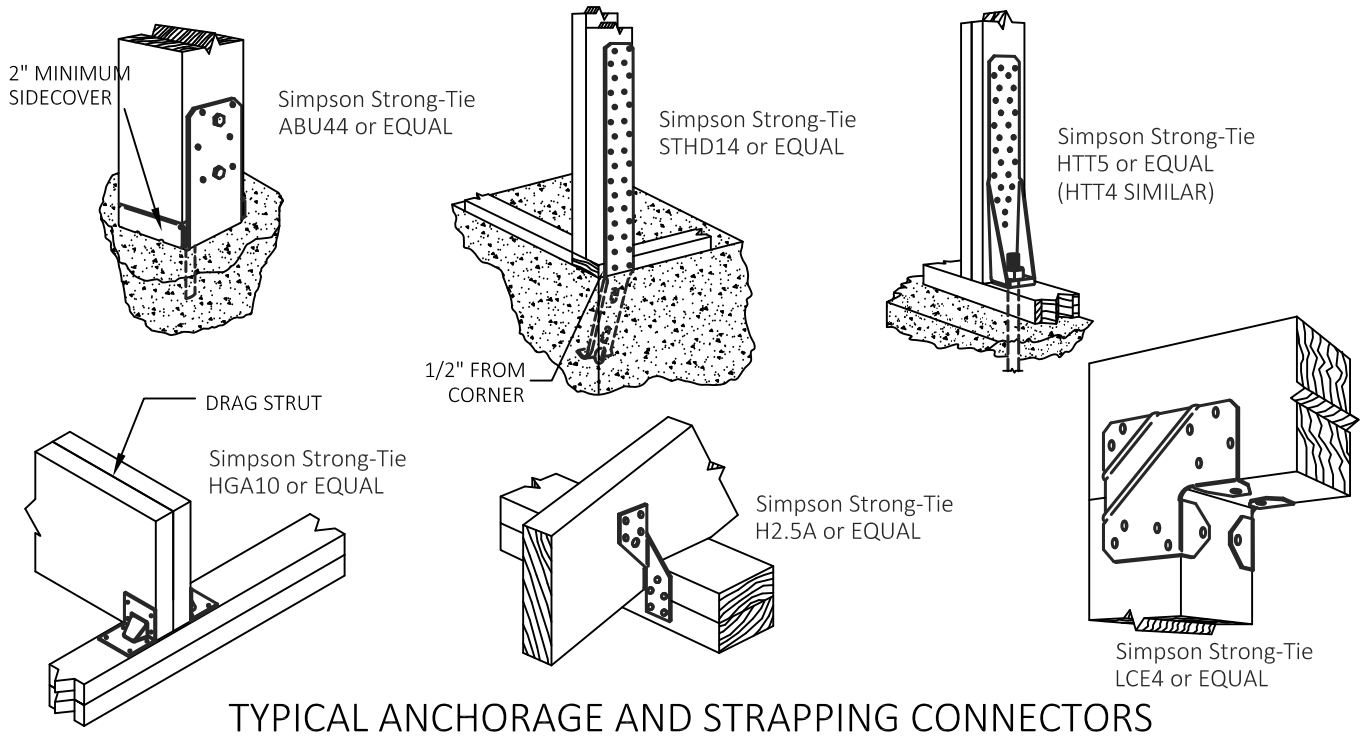

TYPICAL ANCHORAGE AND STRAPPING CONNECTORS

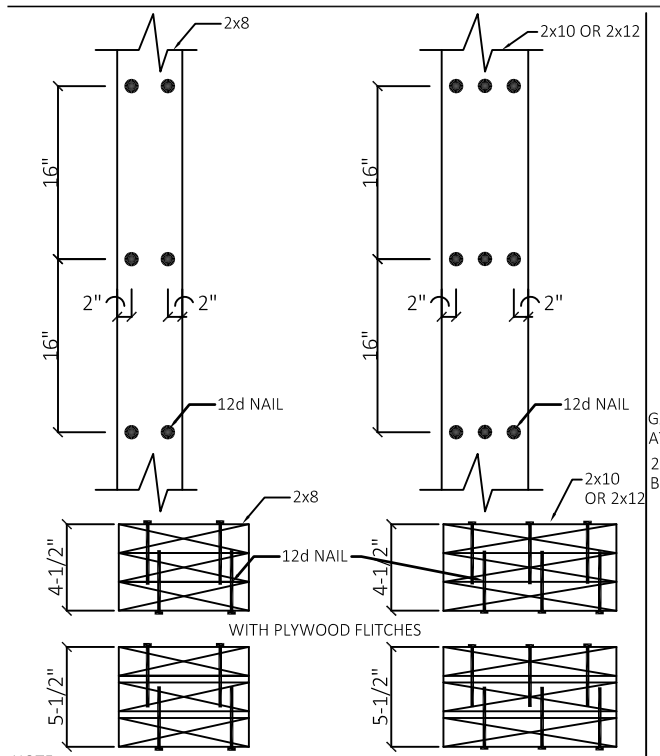

NOTE:
USE FULL SPAN LENGTHS (do not splice) SPIKED TOGETHER WITH MIN 12d NAILS AS SHOWN ABV.

BUILT-UP COLUMN DETAIL

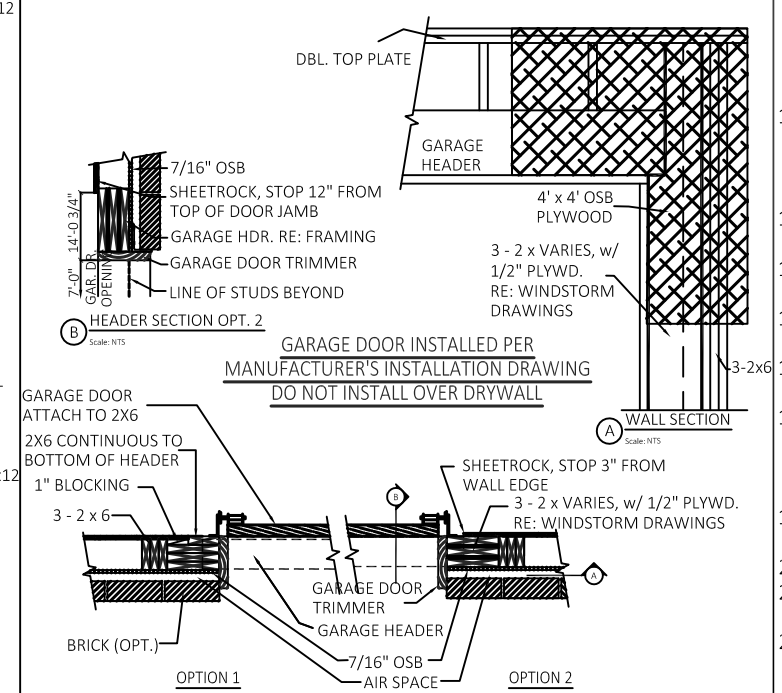

GARAGE DOOR FRAMING DETAIL EXAMPLES

WINDSTORM CONSTRUCTION NOTES: 110 MPH

1. UNLESS NOTED OTHERWISE, ALL CONSTRUCTION SHALL MEET THE GENERAL REQUIREMENTS OF 2006 I.R.C. BUILDING CODE , ASCE 7, AND THE WOOD FRAME CONSTRUCTION MANUAL.
2. THE WINDSTORM DESIGN FOR THIS STRUCTURE IS BASED UPON ASCE STANDARD 7-05 REQUIREMENTS FOR REGIONS WITH 110 MPH 3-SECOND GUST WIND SPEED.
3. THE MUDSILL AT ALL EXTERIOR WALLS SHALL BE ANCHORED TO THE FOUNDATION SLAB WITH 1/2" DIAMETER x 10" ANCHOR BOLTS EMBEDDED 6" INTO THE SLAB AND SPACED 4'-0" O.C. FOR SINGLE STORY AND 3'-0" O.C. FOR TWO-STORY HOMES. ALTERNATE ANCHORS SUCH AS SIMPSON STRONG-TIE MASB OR MAS MUDSILL ANCHORS SPACED AT 3' - 6" AND 2' - 6" O.C. , RESPECTIVELY, MAY BE USED. MAX DISTANCE FROM ALL CORNERS 12".
4. ALL WINDSTORM STRAPS AND CLIPS SHALL BE CONTINUOUS FROM THE RAFTER TO THE MUDSILL SECURELY TIED INTO THE FOUNDATION AS INDICATED ON THE PLANS AND SHOWN IN DETAILS SPECIFIC TO THE WINDSTORM REQUIREMENTS. IN EXPOSURE C ZONES, CLIP EVERY RAFTER ACROSS BOTH TOP PLATES. IN EXPOSURE B AREAS CLIP EVERY RAFTER ACROSS BOTH TOP PLATES FOR THE FIRST 4' FROM EACH CORNER AND EVERY OTHER RAFTER FOR THE REMAINDER OF THE WALL .
5. SHEAR WALL REQUIREMENTS ARE IDENTIFIED ON WINDLOAD PLANS. EACH SEGMENT SHALL BE ANCHORED/SECURED TO FOUNDATION OR FLOOR BELOW PER DIAGRAM. NAIL DOUBLE TOP PLATE WITH 5-12d NAILS @ 16" O.C. FOR ALL SHEAR WALLS WITH REQUIRED OSB NAILING PATTERN GREATER THAN 4" O.C. ON EDGE.
6. ALL SHEAR WALL PANELS SHALL BE 15/32" C-D PLYWOOD OR 7/16" ORIENTED STRAND BOARD ATTACHED TO STUDS ABOUT THE PERIMETER WITH 8d NAILS PLACED AT 4 INCHES ON CENTER. INTERIOR NAILING MAY BE EXPANDED TO 12 INCHES ON CENTER. ALL CORNERS MUST HAVE MINIMUM SEGMENT OF SHEAR WALL WITH REMAINDER OF WALL AS PER PLAN. SHEATHING IDENTIFIED ON DIAGRAMS MAY BE INSTALLED ON EITHER SIDE OF WALL PROVIDING EQUIVALENT SHEAR CAPACITY. EXTENDING TOP TO BOTTOM PLATE
7. RECOMMEND FULL PLYWOOD OR OSB WITH 4" NAIL SPACING AT EDGES AND 12" NAILING IN MIDDLE. BLOCK ALL EDGES WHERE SHEAR PANELS ARE SPLICED THROUGHOUT THE ENTIRE STRUCTURE (OR PER ATTACHED DIAGRAM).
8. CORNER BRACING SHALL BE EITHER 1" x 4 " WOOD LET-IN TO STUDS, GALVANIZED METAL BRACES OR 4' x 8' PLYWOOD (OR OSB) PANELS.
9. INSIDE WALLS OF AT LEAST 6'-0" IN LENGTH INTERSECTING OUTSIDE WALLS SHALL BE LATERALLY BRACED WITH (1" x 4") WOOD OR GALVANIZED BRACES FOR EACH 22 FEET OF OUTSIDE WALL. THIS APPLIES TO BOTH BOTTOM AND UPPER STORY WALLS.
10. STRAP ALL HEADERS 32" ON CENTER TO TOP PLATES - SIMPSON STRAP. CLIP KING STUDS TOP AND BOTTOM AND STRAP TRIMMERS TO HEADER AND CLIP TRIMMERS TO TOE PLATE - SIMPSON RSP4 CLIPS.
11. EVERY OTHER STUD SHALL BE ANCHORED TO THE MUDSILL AND/OR TOP PLATE WITH SIMPSON STRONG-TIE STUD PLATE IES SP1, RSP4 OR SPH4 OR EQUAL. USE SIMPSON L T S 12 (OR H2.5A). CLIP EACH WINDOW AND DOOR KING STUD TOP AND BOTTOM; USE SIMPSON LSTA 12 (OR H2.5A).
12. ON TWO-STORY HOUSE - STRAP ACROSS FLOORS AT EVERY OTHER STUD; USE SIMPSON LSTA24 - 30 OR MSTA36 WITH MIN. 7 NAILS IN EACH STUD. ALSO STRAP KING STUDS ACROSS FLOORS. CLIP EVERY OTHER STUD TOP AND BOTTOM. STRAPS BETWEEN FLOORS - 7 NAILS TOP STUD AND 7 IN BOTTOM OF STUD. CLIP TYPE VARIES PER ROOF SPAN. CLIP OR STRAP EVERY GABLE STUD TO RAFTER AND TOP PLATES OR NAIL IN SHEAR. CLIP HIPS AND VALLEYS TO TOP PLATE WITH SIMPSON HCP CORNER CONNECTOR OR DOUBLE CLIP WITH H2.5A. COLLAR TIES OF 2" x 4" OR GREATER WOOD SHALL BE ATTACHED TO EVERY OTHER RAFTER IN THE UPPER 1/3 OF THE RAFTERS WITH 5-12d NAILS. WHERE RAFTERS MEET THE TOP PLATE OF EXTERIOR WALL, INSTALL SIMPSON STRONG - TIE H2.5A ANCHORS OR H3 AT EVERY OTHER RAFTER. ALTERNATE ANCHORS WITH 415 LBS. CAPACITY OR GREATER MAY BE SUBSTITUTED.
13. PURLIN BRACES MUST BE ATTACHED TO EVERY THIRD RAFTER THAT EXCEED THE ALLOWABLE UNBRACED HORIZONTAL SPAN. RAFTERS 20' IN LENGTH AND LONGER MUST BE DOUBLE CLIPPED TO TOP PLATE. PURLIN BRACES MUST BE CLIPPED OR NAILED IN SHEAR TO THE RAFTERS AND CLIPPED OR STRAPPED TO TOP PLATES OR SUPPORTING BEAMS WHICH IN TURN MUST BE STRAPPED TO LOAD BEARING WALLS (CLIPPING OF PURLING BRACES APPLIES ONLY TO EXPOSURE C AREAS).
14. GARAGE DOOR HEADERS MUST BE ANCHORED PER DETAIL SHEET AND SPECIFICALLY NAILED AS SHOWN. TWO (2) SIMPSON HTT /5 OR EQUAL TIE - DOWNS MUST BE INSTALLED AT EACH HEADER SUPPORT COLUMN.
15. COLUMN ANCHORS AT EACH COLUMN SUPPORTING PORCH OVER - HANG SHALL BE SIMPSON STRONG - TIE POST BASE ANCHOR ABU44 OR EQUAL CAPABLE OF RESISTING 500 LBS. UPLIFT.
16. OUTSIDE WALLS, INTERIOR LOAD BEARING WALLS, OR INTERIOR WALLS WHICH SUPPORT EXTERIOR WALLS - CLEAT OR HAVE BOLTS WITHIN 12" OF SPLICE ON EACH SIDE, OR USE OTHER APPROVED ANCHORING METHOD.
17. ALL ANCHOR MATERIALS SHALL BE INSTALLED PER THE MANUFACTURER'S INSTRUCTIONS AND REQUIREMENTS. ALL NAILING MUST BE DONE AS SPECIFIED TO ENSURE THE REQUIRED ABILITY OF THE STRUCTURE TO WITHSTAND THE WIND FORCE FOR THE SPECIFIED REGION.
18. ROOF SHEATHING WITHIN 4 FEET OF THE PERIMETER EDGE OF ROOF AND RIDGE MUST BE NAILED 4" O.C. AT EDGE AND 6" O.C. IN THE FIELD FOR 2-STORY HOMES ONLY. THE REMAINING PORTIONS OF THE A 2-STORY ROOF AND ALL 1-STORY ROOF DECKING TO BE ATTACHED 6" O.C. AT EDGE AND 8" O.C. IN FIELD WITH 8d GALVANIZED OR CORROSION RESISTANT NAILS. ROOF SHINGLES TO BE ATTACHED PER MANUFACTURERS RECOMMENDATIONS WITH GALVANIZED OR CORROSION RESISTANT FASTENERS.
19. WINDOWS AND DOORS SHALL BE FASTENED PER MANUFACTURER'S PRODUCT EVALUATION. THE DESIGN PRESSURES MUST COMPLY WITH 2006 IRC, SEC. 613.3 REQUIREMENTS FOR SPECIFIED WIND SPEED AREAS.
20. BRICK TIES - EVERY 16" ON EACH STUD WITH (2) 6d OR (1) 8d CORROSION RESISTANT NAILS.
21. MECHANICAL UNIT - SECURED BY BOLTING OR SHOOTING TO SLAB WITH MINIMUM OF 3 SHOTS PER UNIT. ALL UNITS MUST BE ON MINIMUM 90 POUND CONCRETE PADS.
22. THE ENTIRE CHIMNEY OR DORMER SHALL BE SHEATHED WITH STRUCTURAL PANELS OR 1x4 DIAGONAL BRACING. CHIMNEYS OR DORMERS FRAMED THROUGH ROOF MUST BE BALLOON FRAMED OR CONNECTED TO DOUBLE RAFTERS WITH MINIMUM 3/8" X 6" LAG SCREWS AT EACH VERTICAL STUD. ALL CHIMNEYS EXTENDING MORE THAN 7'-6" ABOVE ROOF PLANE MUST BE BALLOON FRAMED WITH 2X6 MATERIAL AND SHEATH.
23. ALL SECOND STORY PERIMETER WALLS AND INTERIOR SHEAR WALLS MUST BE NAILED TO BEAM/WALL/JOIST BELOW WITH 3-12d NAILS 16" O.C. ALL SUBFLOOR DECKING SHALL HAVE A 6" O.C. AND 12" O.C. NAILING PATTERN. ALL FLOOR JOISTS MUST BE SECURED TO SHEAR WALLS WITH A MINIMUM OF 3-12d NAILS OR BLOCK AND NAIL BETWEEN PARALLEL JOISTS 24" O.C. TO SECURE FLOOR DIAPHRAGM TO SHEAR WALL.
24. ALL EXTERIOR WALLS OVER 10' IN HEIGHT MUST BE DOUBLE 2X4 STUDS @ 16" O.C. ALL EXTERIOR WALLS OVER 13'-6" MUST BE 2X6 STUDS @ 16" O.C.

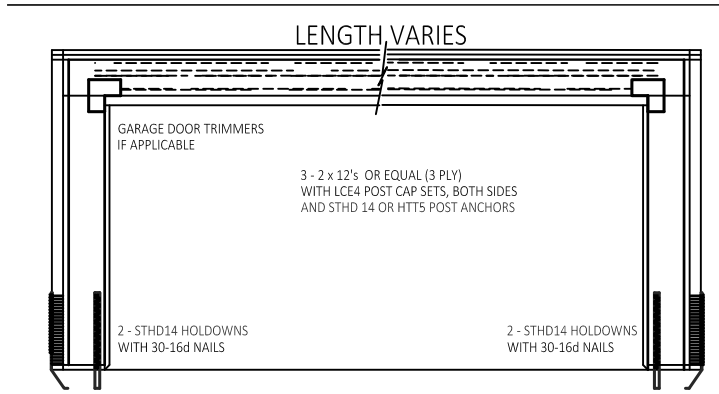

NARROW shear wall CONFIGURATION APPLIES TO ALL DESIGNATED AREAS INCLUDING GARAGE DOORS, WINDOWS, DOORS, ETC.

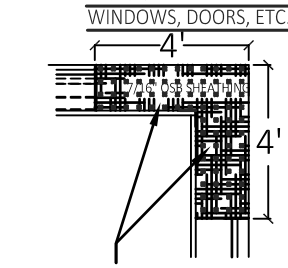

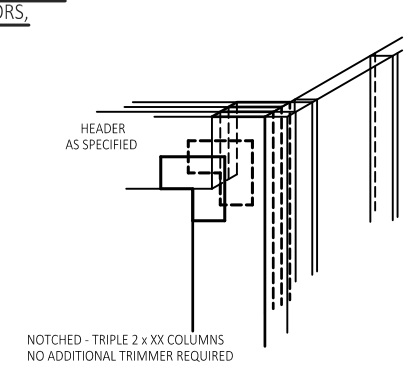

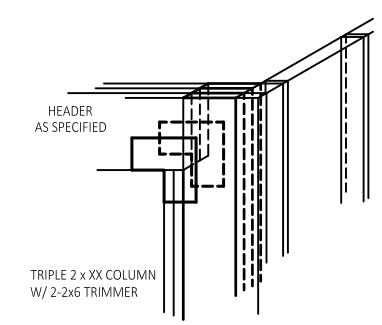

NARROW SHEAR WALL DETAIL

DETAIL APPLIES TO ALL NARROW SHEAR WALLS DESIGNATED ON WIND STORM DIAGRAM.

HEADER NOTE:
MINIMUM HEADER SIZE FOR NARROW SHEAR WALL 3 - 2 x 6's. SEE PLANS FOR HEADER SIZE. FURR OUT TO 6" WALL IF NECESSARY

NUMBER AND DIMENSIONS OF STUDS SUPPORTING HEADER AS SPECIFIED ON DIAGRAM OR PER AF & PA WFCM.

ORIGINAL DATE: OCT-10-2014

REVISION NUMBER	REVISION DATE	REVISION BY
B	04-08-15	GS

642 HEIGHTS
HOUSTON TX. 77007

City/Jurisdiction
HOUSTON

WINDSTORM DETAILS

SHEET No:
B WL-3

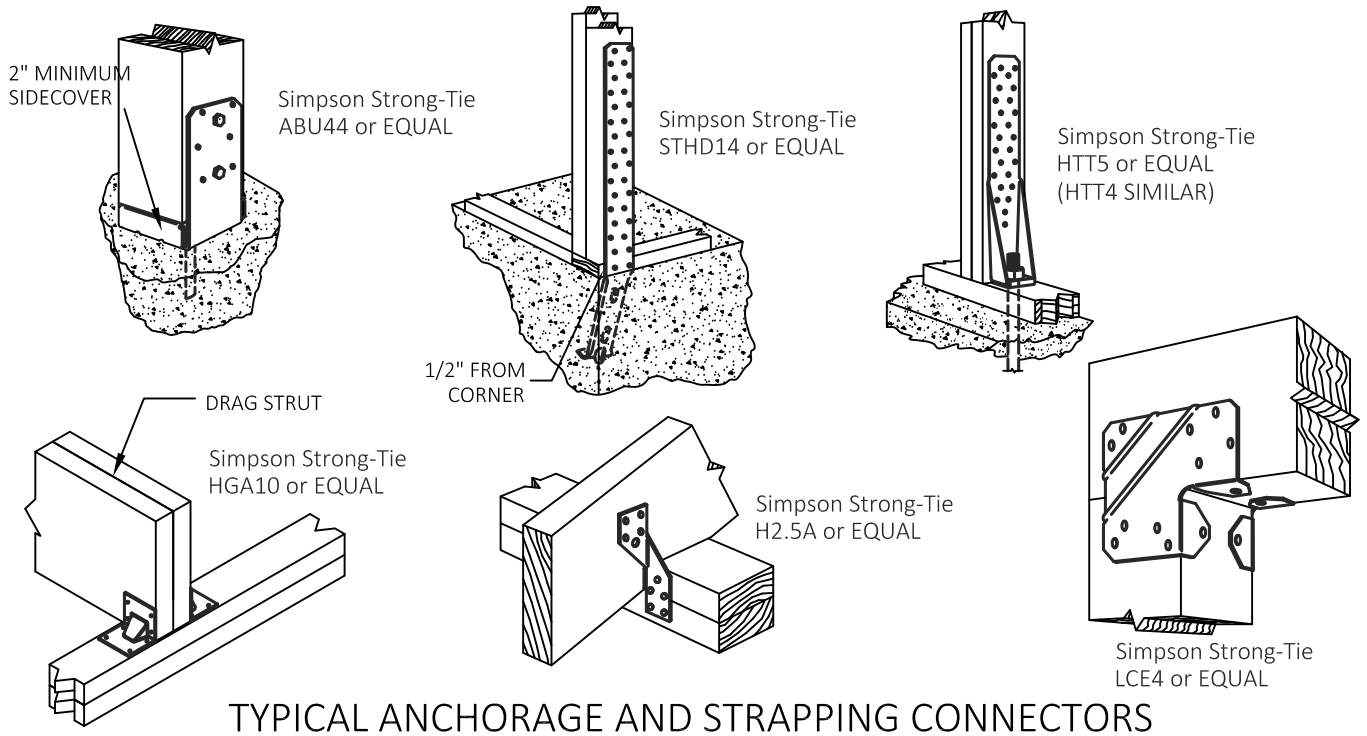

TYPICAL ANCHORAGE AND STRAPPING CONNECTORS

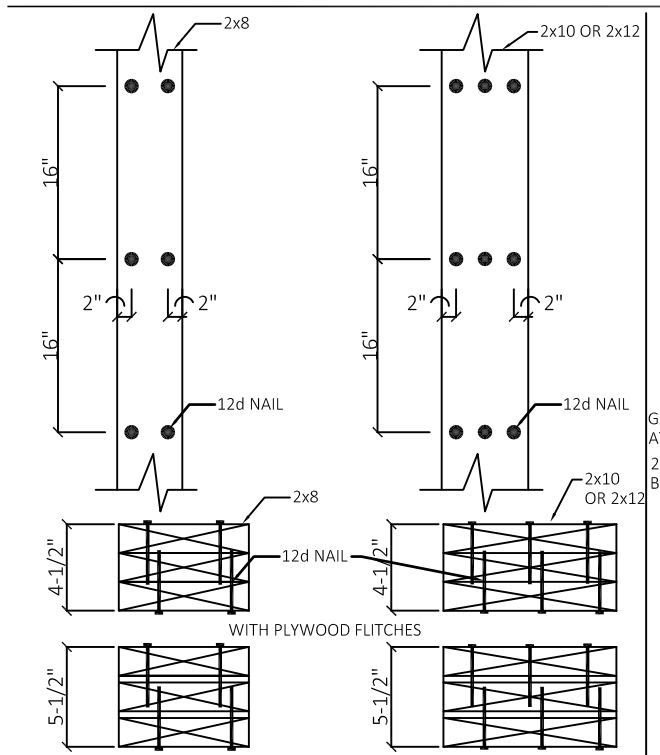

NOTE:
USE FULL SPAN LENGTHS (do not splice) SPIKED TOGETHER WITH MIN 12d NAILS AS SHOWN ABV.

BUILT-UP COLUMN DETAIL

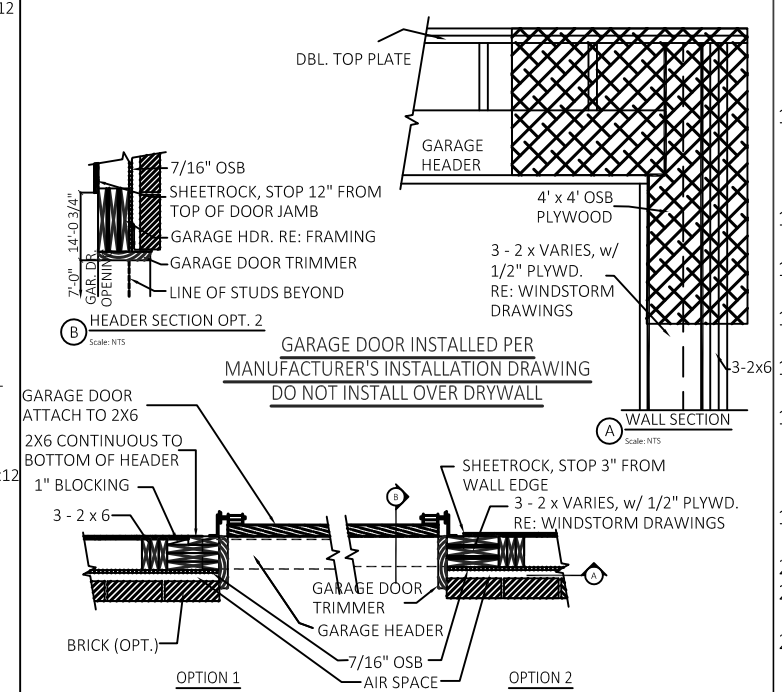

GARAGE DOOR FRAMING DETAIL EXAMPLES

WINDSTORM CONSTRUCTION NOTES: 110 MPH

1. UNLESS NOTED OTHERWISE, ALL CONSTRUCTION SHALL MEET THE GENERAL REQUIREMENTS OF 2006 I.R.C. BUILDING CODE , ASCE 7, AND THE WOOD FRAME CONSTRUCTION MANUAL.
2. THE WINDSTORM DESIGN FOR THIS STRUCTURE IS BASED UPON ASCE STANDARD 7-05 REQUIREMENTS FOR REGIONS WITH 110 MPH 3-SECOND GUST WIND SPEED.
3. THE MUDSILL AT ALL EXTERIOR WALLS SHALL BE ANCHORED TO THE FOUNDATION SLAB WITH 1/2" DIAMETER x 10" ANCHOR BOLTS EMBEDDED 6" INTO THE SLAB AND SPACED 4'-0" O.C. FOR SINGLE STORY AND 3'-0" O.C. FOR TWO-STORY HOMES. ALTERNATE ANCHORS SUCH AS SIMPSON STRONG-TIE MASB OR MAS MUDSILL ANCHORS SPACED AT 3' - 6" AND 2' - 6" O.C. , RESPECTIVELY, MAY BE USED. MAX DISTANCE FROM ALL CORNERS 12".
4. ALL WINDSTORM STRAPS AND CLIPS SHALL BE CONTINUOUS FROM THE RAFTER TO THE MUDSILL SECURELY TIED INTO THE FOUNDATION AS INDICATED ON THE PLANS AND SHOWN IN DETAILS SPECIFIC TO THE WINDSTORM REQUIREMENTS. IN EXPOSURE C ZONES, CLIP EVERY RAFTER ACROSS BOTH TOP PLATES. IN EXPOSURE B AREAS CLIP EVERY RAFTER ACROSS BOTH TOP PLATES FOR THE FIRST 4' FROM EACH CORNER AND EVERY OTHER RAFTER FOR THE REMAINDER OF THE WALL .
5. SHEAR WALL REQUIREMENTS ARE IDENTIFIED ON WINDLOAD PLANS. EACH SEGMENT SHALL BE ANCHORED/SECURED TO FOUNDATION OR FLOOR BELOW PER DIAGRAM. NAIL DOUBLE TOP PLATE WITH 5-12d NAILS @ 16" O.C. FOR ALL SHEAR WALLS WITH REQUIRED OSB NAILING PATTERN GREATER THAN 4" O.C. ON EDGE.
6. ALL SHEAR WALL PANELS SHALL BE 15/32" C-D PLYWOOD OR 7/16" ORIENTED STRAND BOARD ATTACHED TO STUDS ABOUT THE PERIMETER WITH 8d NAILS PLACED AT 4 INCHES ON CENTER. INTERIOR NAILING MAY BE EXPANDED TO 12 INCHES ON CENTER. ALL CORNERS MUST HAVE MINIMUM SEGMENT OF SHEAR WALL WITH REMAINDER OF WALL AS PER PLAN. SHEATHING IDENTIFIED ON DIAGRAMS MAY BE INSTALLED ON EITHER SIDE OF WALL PROVIDING EQUIVALENT SHEAR CAPACITY. EXTENDING TOP TO BOTTOM PLATE
7. RECOMMEND FULL PLYWOOD OR OSB WITH 4" NAIL SPACING AT EDGES AND 12" NAILING IN MIDDLE. BLOCK ALL EDGES WHERE SHEAR PANELS ARE SPLICED THROUGHOUT THE ENTIRE STRUCTURE (OR PER ATTACHED DIAGRAM).
8. CORNER BRACING SHALL BE EITHER 1" x 4 " WOOD LET-IN TO STUDS, GALVANIZED METAL BRACES OR 4' x 8' PLYWOOD (OR OSB) PANELS.
9. INSIDE WALLS OF AT LEAST 6'-0" IN LENGTH INTERSECTING OUTSIDE WALLS SHALL BE LATERALLY BRACED WITH (1" x 4") WOOD OR GALVANIZED BRACES FOR EACH 22 FEET OF OUTSIDE WALL. THIS APPLIES TO BOTH BOTTOM AND UPPER STORY WALLS.
10. STRAP ALL HEADERS 32" ON CENTER TO TOP PLATES - SIMPSON STRAP. CLIP KING STUDS TOP AND BOTTOM AND STRAP TRIMMERS TO HEADER AND CLIP TRIMMERS TO TOE PLATE - SIMPSON RSP4 CLIPS.
11. EVERY OTHER STUD SHALL BE ANCHORED TO THE MUDSILL AND/OR TOP PLATE WITH SIMPSON STRONG-TIE STUD PLATE IES SP1, RSP4 OR SPH4 OR EQUAL. USE SIMPSON L T S 12 (OR H2.5A). CLIP EACH WINDOW AND DOOR KING STUD TOP AND BOTTOM; USE SIMPSON LSTA 12 (OR H2.5A).
12. ON TWO-STORY HOUSE - STRAP ACROSS FLOORS AT EVERY OTHER STUD; USE SIMPSON LSTA24 - 30 OR MSTA36 WITH MIN. 7 NAILS IN EACH STUD. ALSO STRAP KING STUDS ACROSS FLOORS. CLIP EVERY OTHER STUD TOP AND BOTTOM. STRAPS BETWEEN FLOORS - 7 NAILS TOP STUD AND 7 IN BOTTOM OF STUD. CLIP TYPE VARIES PER ROOF SPAN. CLIP OR STRAP EVERY GABLE STUD TO RAFTER AND TOP PLATES OR NAIL IN SHEAR. CLIP HIPS AND VALLEYS TO TOP PLATE WITH SIMPSON HCP CORNER CONNECTOR OR DOUBLE CLIP WITH H2.5A. COLLAR TIES OF 2" x 4" OR GREATER WOOD SHALL BE ATTACHED TO EVERY OTHER RAFTER IN THE UPPER 1/3 OF THE RAFTERS WITH 5-12d NAILS. WHERE RAFTERS MEET THE TOP PLATE OF EXTERIOR WALL, INSTALL SIMPSON STRONG - TIE H2.5A ANCHORS OR H3 AT EVERY OTHER RAFTER. ALTERNATE ANCHORS WITH 415 LBS. CAPACITY OR GREATER MAY BE SUBSTITUTED.
13. PURLIN BRACES MUST BE ATTACHED TO EVERY THIRD RAFTER THAT EXCEED THE ALLOWABLE UNBRACED HORIZONTAL SPAN. RAFTERS 20' IN LENGTH AND LONGER MUST BE DOUBLE CLIPPED TO TOP PLATE. PURLIN BRACES MUST BE CLIPPED OR NAILED IN SHEAR TO THE RAFTERS AND CLIPPED OR STRAPPED TO TOP PLATES OR SUPPORTING BEAMS WHICH IN TURN MUST BE STRAPPED TO LOAD BEARING WALLS (CLIPPING OF PURLING BRACES APPLIES ONLY TO EXPOSURE C AREAS).
14. GARAGE DOOR HEADERS MUST BE ANCHORED PER DETAIL SHEET AND SPECIFICALLY NAILED AS SHOWN. TWO (2) SIMPSON HTT /5 OR EQUAL TIE - DOWNS MUST BE INSTALLED AT EACH HEADER SUPPORT COLUMN.
15. COLUMN ANCHORS AT EACH COLUMN SUPPORTING PORCH OVER - HANG SHALL BE SIMPSON STRONG - TIE POST BASE ANCHOR ABU44 OR EQUAL CAPABLE OF RESISTING 500 LBS. UPLIFT.
16. OUTSIDE WALLS, INTERIOR LOAD BEARING WALLS, OR INTERIOR WALLS WHICH SUPPORT EXTERIOR WALLS - CLEAT OR HAVE BOLTS WITHIN 12" OF SPLICE ON EACH SIDE, OR USE OTHER APPROVED ANCHORING METHOD.
17. ALL ANCHOR MATERIALS SHALL BE INSTALLED PER THE MANUFACTURER'S INSTRUCTIONS AND REQUIREMENTS. ALL NAILING MUST BE DONE AS SPECIFIED TO ENSURE THE REQUIRED ABILITY OF THE STRUCTURE TO WITHSTAND THE WIND FORCE FOR THE SPECIFIED REGION.
18. ROOF SHEATHING WITHIN 4 FEET OF THE PERIMETER EDGE OF ROOF AND RIDGE MUST BE NAILED 4" O.C. AT EDGE AND 6" O.C. IN THE FIELD FOR 2-STORY HOMES ONLY. THE REMAINING PORTIONS OF THE A 2-STORY ROOF AND ALL 1-STORY ROOF DECKING TO BE ATTACHED 6" O.C. AT EDGE AND 8" O.C. IN FIELD WITH 8d GALVANIZED OR CORROSION RESISTANT NAILS. ROOF SHINGLES TO BE ATTACHED PER MANUFACTURERS RECOMMENDATIONS WITH GALVANIZED OR CORROSION RESISTANT FASTENERS.
19. WINDOWS AND DOORS SHALL BE FASTENED PER MANUFACTURER'S PRODUCT EVALUATION. THE DESIGN PRESSURES MUST COMPLY WITH 2006 IRC, SEC. 613.3 REQUIREMENTS FOR SPECIFIED WIND SPEED AREAS.
20. BRICK TIES - EVERY 16" ON EACH STUD WITH (2) 6d OR (1) 8d CORROSION RESISTANT NAILS.
21. MECHANICAL UNIT - SECURED BY BOLTING OR SHOOTING TO SLAB WITH MINIMUM OF 3 SHOTS PER UNIT. ALL UNITS MUST BE ON MINIMUM 90 POUND CONCRETE PADS.
22. THE ENTIRE CHIMNEY OR DORMER SHALL BE SHEATHED WITH STRUCTURAL PANELS OR 1x4 DIAGONAL BRACING. CHIMNEYS OR DORMERS FRAMED THROUGH ROOF MUST BE BALLOON FRAMED OR CONNECTED TO DOUBLE RAFTERS WITH MINIMUM 3/8" X 6" LAG SCREWS AT EACH VERTICAL STUD. ALL CHIMNEYS EXTENDING MORE THAN 7'-6" ABOVE ROOF PLANE MUST BE BALLOON FRAMED WITH 2X6 MATERIAL AND SHEATH.
23. ALL SECOND STORY PERIMETER WALLS AND INTERIOR SHEAR WALLS MUST BE NAILED TO BEAM/WALL/JOIST BELOW WITH 3-12d NAILS 16" O.C. ALL SUBFLOOR DECKING SHALL HAVE A 6" O.C. AND 12" O.C. NAILING PATTERN. ALL FLOOR JOISTS MUST BE SECURED TO SHEAR WALLS WITH A MINIMUM OF 3-12d NAILS OR BLOCK AND NAIL BETWEEN PARALLEL JOISTS 24" O.C. TO SECURE FLOOR DIAPHRAGM TO SHEAR WALL.
24. ALL EXTERIOR WALLS OVER 10' IN HEIGHT MUST BE DOUBLE 2X4 STUDS @ 16" O.C. ALL EXTERIOR WALLS OVER 13'-6" MUST BE 2X6 STUDS @ 16" O.C.

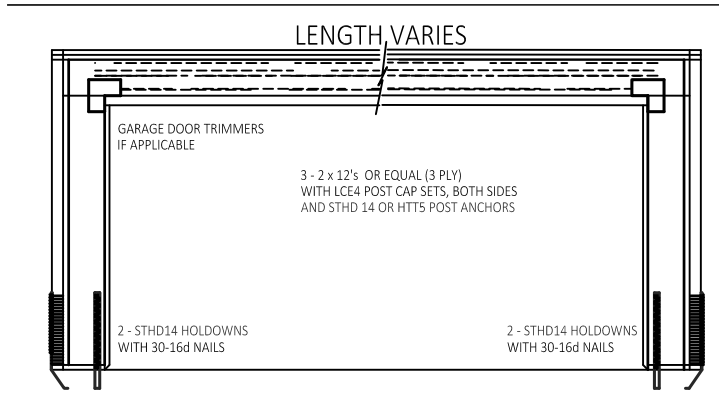

NARROW shear wall CONFIGURATION APPLIES TO ALL DESIGNATED AREAS INCLUDING GARAGE DOORS, WINDOWS, DOORS, ETC.

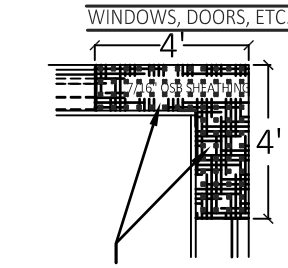

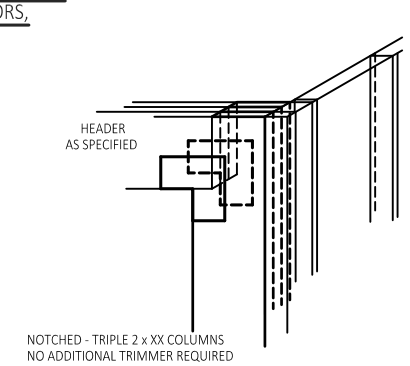

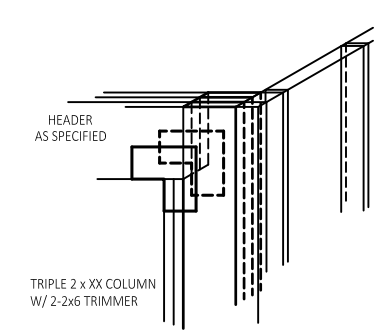

NARROW SHEAR WALL DETAIL

DETAIL APPLIES TO ALL NARROW SHEAR WALLS DESIGNATED ON WIND STORM DIAGRAM.

HEADER NOTE:
MINIMUM HEADER SIZE FOR NARROW SHEAR WALL 3 - 2 x 6's. SEE PLANS FOR HEADER SIZE. FURR OUT TO 6" WALL IF NECESSARY

NUMBER AND DIMENSIONS OF STUDS SUPPORTING HEADER AS SPECIFIED ON DIAGRAM OR PER AF & PA WFCM.

ORIGINAL DATE: OCT-10-2014

REVISION NUMBER	REVISION DATE	REVISION BY
B	04-08-15	GS

638 HEIGHTS
HOUSTON TX. 77007

City/Jurisdiction
HOUSTON

WINDSTORM DETAILS

SHEET No:
B WL-3