CERTIFICATE OF APPROPRIATENESS

ALTERATION / ADDITION APPLICATION FORM

PLANNING & DEVELOPMENT DEPARTMENT

PROPERTY

Address 720 W. ALABAMA AVENUE, HOUSTON TEXAS 77006

Historic District / Landmark HCAD # 0261430000008

Subdivision MONTROSE Lot 8 Block M

DESIGNATION TYPE

- ☐ Landmark
- ☐ Protected Landmark
- ☐ Archaeological Site
- ☐ Contributing
- ☐ Noncontributing
- ☐ Vacant

PROPOSED ACTION

- ☐ Alteration
- ☐ Addition
- ☒ Restoration

DOCUMENTS

☒ Application checklist for each proposed action and all applicable documentation listed within are attached

OWNER

Name SIAMAK AGAH

Company

Mailing Address 10654 MEMORIAL DR
HOUSTON, TX 77024

Phone 713 932 0909

Email [redacted]

Signature Siamak Agah

Date 8/14/2016

APPLICANT (if other than owner)

Name GUILLERMO SAMAGUN

Company PURSER ARCHITECTURAL

Mailing Address 14780 MEMORIAL DR
HOUSTON, TX 77079

Phone 281 293 9291

Email [redacted]

Signature

Date 8/9/16

ACKNOWLEDGEMENT OF RESPONSIBILITY

Requirements : A complete application includes all applicable information requested on checklists to provide a complete and accurate description of existing and proposed conditions. Preliminary review meeting or site visit with staff may be necessary to process the application. Owner contact information and signature is required. Late or incomplete applications will not be considered.

Deed Restrictions: You have verified that the work does not violate applicable deed restrictions.

Public Records : If attached materials are protected by copyright law, you grant the City of Houston, its officers, agencies, departments, and employees, non- exclusive rights to reproduce, distribute and publish copyrighted materials before the Houston Archa eological and Historical Commission, the Planning Commission, City Council, and other City of Houston commissions, agencies, and departments, on a City of Houston website, or other public forum for the purposes of application for a Certificate of Appropriateness or building permit, and other educational and not for profit purposes. You hereby represent that you possess the requisite permission or rights being conveyed here to the City.

Compliance: If granted, you agree to comply with all conditions of the COA. Revisions to approved work require staff review and may require a new application and HAHC approval. Failure to comply with the COA may result in project delays, fines or other penalties.

Planner: _____ Application received: ___/___/___ Application complete: ___/___/___

CERTIFICATE OF APPROPRIATENESS
ALTERATION / ADDITION CHECKLIST

PLANNING & DEVELOPMENT DEPARTMENT

Well in advance of the COA application deadline contact staff to discuss your project and, if necessary, to make an appointment to meet with staff for a project consultation.

Complete all applicable items and submit with the COA application form. Staff can assist you in determining what items are required for your scope of work. An incomplete application may cause delays in processing or may be deferred to the next agenda. Application materials must clearly represent current and proposed conditions. Refer to Houston Code of Ordinances, Ch. 33 VII, Sec. 33-241 for approval criteria for alteration, rehabilitation, restoration and additions.

PROPERTY ADDRESS: 720 W. ALABAMA AVENUE

BUILDING TYPE

- [x] single-family residence
- [ ] multi-family residence
- [ ] commercial building
- [ ] mixed use building
- [ ] institutional building
- [ ] garage
- [ ] carport
- [ ] accessory structure
- [ ] other

ALTERATION TYPE *Check all that apply*

- [ ] addition
- [ ] foundation
- [ ] wall siding or cladding
- [ ] windows or doors
- [ ] porch or balcony
- [ ] roof
- [ ] awning or canopy
- [ ] commercial sign
- [x] ramp or lift
- [x] other CHANGE OF OCCUPANCY

WRITTEN DESCRIPTION

- property description, current conditions and any prior alterations or additions
- proposed work; plans to change any exterior features, and/or addition description
- current building material conditions and originality of any materials proposed to be repaired or replaced
- proposed new materials description; attach specification sheets if necessary

PHOTOGRAPHS *Label photos with description and location*

- elevations of all sides
- detail photos of exterior elements subject to proposed work
- historical photos as evidence for restoration work

DRAWINGS *Scale like drawings the same; include all dimensions and drawing scale; label with cardinal directions

- site plan [x] existing [x] proposed
- floor plans [x] existing [x] proposed
- window and door schedule [x] existing [x] proposed
- roof plan [x] existing [x] proposed
- elevations (all sides) [x] existing [x] proposed
- 3D rendering N/A
- demolition plan ✓

CERTIFICATE OF APPROPRIATENESS
ALTERATION / ADDITION WORKSHEET

PLANNING & DEVELOPMENT DEPARTMENT

	EXISTING	CHANGES TO EXISTING	PROPOSED ADDITION
STORIES	2	N/A	N/A
SQUARE FOOTAGE			
CONDITIONED	2,219	N/A	
UNCONDITIONED	381	N/A	RAMP- 225
SETBACKS*	N: E: S: N/A W: N/A	N: E: S: N/A W: N/A	N: E: S: N/A W: N/A
HEIGHTS			
Ridge	27'-7"	N/A	N/A
Eave	22'-2"	N/A	N/A
FOOTPRINT			
MAX WIDTH	39'-6"	N/A	N/A
MAX DEPTH	52'-10"	N/A	57'-10" (5' WIDE RAMP)
ENCROACHMENT		N/A	
FOUNDATION			
Height to FF	2'-6"	N/A	N/A
Type	PIER FOUNDATION	N/A	N/A
Material	CONCRETE	N/A	N/A
CLADDING			
Material	STUCCO	N/A	N/A
Reveal/Brick Info	N/A	N/A	N/A
PORCH			
Eave Height	15'-11"	N/A	N/A
Width	28'-5½"	N/A	N/A
Depth	13'-7"	N/A	N/A
Material	WOOD	N/A	N/A
Column Style	STUCCO	N/A	N/A
Column Dimensions	2'x 2'	N/A	N/A
ROOF			
Style	SHINGLE ROOF	N/A	N/A
Pitch	4:12	N/A	N/A
Material	SHINGLE	N/A	N/A
Eave Design	CRAFTSMAN	N/A	N/A
Eave Overhang	2'-0"	N/A	N/A
WINDOWS			
	-- SEE WINDOW WORKSHEET --		

IMPORTANT NOTES:

* Setbacks measured from property line to nearest point of structure
- All required information on worksheet must be indicated on drawings ✓
- All drawings must be fully dimensioned ✓
- All elevations must be fully dimensioned from existing natural grade where grade is 0'-00" ✓
- Specify the height of the existing natural grade relative to a fixed point in the right of way (i.e.: crown of the street or manhole cover) ✓

Failure to include requested information may result in an incomplete application and a delay in the approval of the proposed project

Notes:

CERTIFICATE OF APPROPRIATENESS
WINDOW WORKSHEET

PLANNING & DEVELOPMENT DEPARTMENT

EXISTING WINDOW SCHEDULE

Window	Material	Lite Pattern	Style	Dimensions	Mounting Profile	Original/ Replacement	Existing To Remain	Other
Ex. A1	Wood	1/1	DH	32 x 66	Recessed	Original	No	
A	WOOD	1/1	SH	2'-10" X 5'-5"	RECESSED	ORIGINAL	YES	
B	WOOD	1/1	SH	3'-3" X 5'-5"	RECESSED	ORIGINAL	YES	
C	WOOD	ONE LITE	CASEMENT	2'-0" X 2'-5"	RECESSED	ORIGINAL	YES	
D	WOOD	1/1	SH	2'-7" X 3'-2"	RECESSED	ORIGINAL	YES	
E	WOOD	1/1	SH	2'-6" X 3'-9"	RECESSED	ORIGINAL	YES	
F	WOOD	N/A	GLASS BLOCK	2'-0" X 3'-0"	RECESSED	ORIGINAL	YES	
G	WOOD	ONE LITE	FW	2'-0" X 2'-0"	RECESSED	ORIGINAL	YES	

DAMAGE TO EXISTING WINDOWS

Window	Broken Glass	Painted Shut	Inoperable/Cut Sash Cords/Weights	Rotten Rails/Stiles	Rotten Sill	Rotten/Broken Frame	Other Damage/ Description
Ex. A1	Y	Y	Y	N	Y	N	Missing Parts
A	N/A						
B							
C							

PROPOSED WINDOW SCHEDULE

Window	Material	Lite Pattern	Style	Dimensions	Mounting Profile	Brand or Equivalent	Existing To Remain	Other
Ex. A1	Wood	1/1	DH	32 x 66	Recessed	WindowCo.	No	
A	N/A							
B								
C								

- Must include photos of all windows and indicated damage
- Must include specification sheet and manufacturer's details for all proposed new windows
- Must include site plan or drawing keyed to location of each window and/or door

***Use additional sheets if necessary*

CERTIFICATE OF APPROPRIATENESS
APPLICATION INSTRUCTIONS

PLANNING & DEVELOPMENT DEPARTMENT

Well in advance of the COA application deadline contact staff to discuss your project, application requirements, and, if necessary, to make an appointment to meet with staff for a project consultation. Visit the Historic Preservation Web Manual for historic district profiles, project guidance and forms.
www.houstontx.gov/HistoricPreservationManual

Historic Preservation Office	832.393.6556	historicpreservation@houstontx.gov

SUBMISSION INSTRUCTIONS

To submit application to Historic Preservation Office:

- Email documents to historicpreservation@houstontx.gov (attachments must be less than 10MB)
- Send a Dropbox shared folder invitation to historicpreservation@houstontx.gov, or
- Contact staff to set up an appointment to drop off a disc or flash drive.

MEETING SCHEDULE

- Applications are due **22 calendar days** in advance of the HAHC meeting by **12 PM (noon)** on the deadline date. Exception: revisions to items deferred or denied at the previous HAHC meeting are due 15 days in advance of the scheduled meeting.
- Application deadlines are firm. All materials must be submitted by the deadline to be considered at the following HAHC meeting. Designs must be final at time of application; revisions will not be accepted after the deadline.
- HAHC will not accept new material or redesigns presented at the HAHC meeting. Deferral until the following month's meeting may be necessary in such cases to allow for adequate review by staff and commissioners.
- HAHC monthly meetings are held at 3:00 PM at City Hall Annex, 900 Bagby Street, City Council Chambers, Public Level.

FEE PAYMENT

- Application fees must be paid by close of business on the COA Application Deadline in order for staff to review your application for the HAHC meeting. Call 832-393-6556 to confirm the appropriate fee for your project.

The fees for Alterations / Additions are as follows:

APPLICATION FEES – CERTIFICATES OF APPROPRIATENESS	FEE	TOTAL*
Construction Plan Review (New Construction and Additions)	$249.69	***$ 277.35***
Restoration & Alteration (No Additions)	$97.69	***$ 125.35***

**Included required $27.66 administrative fee*

NOTICE SIGNS

- Notice signs must be posted within three days of application. Please contact staff if you have any problems meeting the deadline.
- You may make your own notice sign as long as it meets the specifications outlined by the Planning Department. The city also has small notice signs available that you may borrow. If you would like to borrow sign, please come to 611 Walker St, 6th floor, to request one from staff.
- Once your sign is posted, please email historicpreservation@houstontx.gov a picture as verification.

OFFICE BUILDING

720 W. ALABAMA
HOUSTON TX. 77006

PERMIT SET

VICINITY MAP

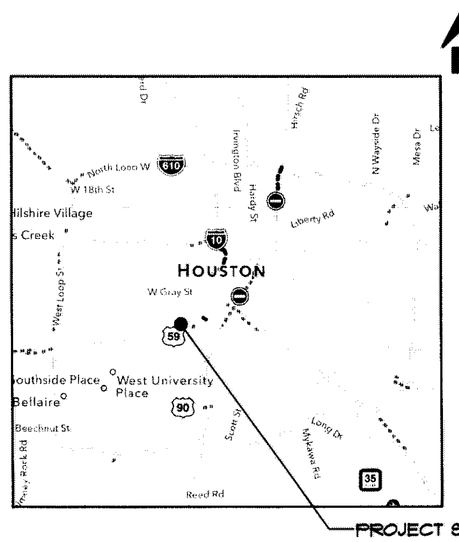

SITE LOCATION MAP

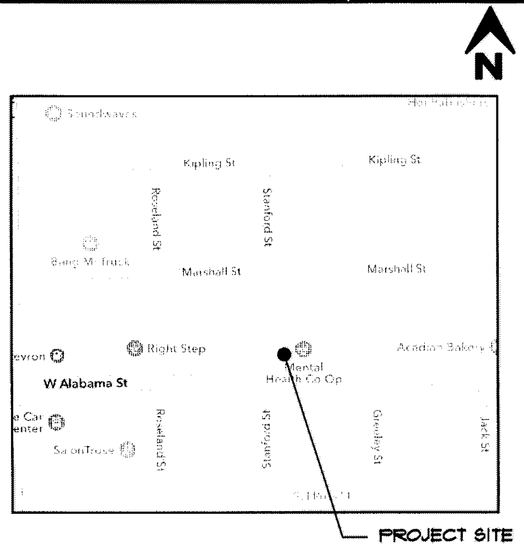

DRAWING INDEX

ARCHITECTURAL

A-0.0	COVER
A-1.0	EXISTING & PROPOSED SITE PLAN
A-2.0	EXISTING FIRST FLOOR PLAN
A-2.1	EXISTING SECOND FLOOR PLAN
A-3.0	DEMO FLOOR PLAN
A-3.1	DEMO UPPER FLOOR PLAN
A-4.0	PROPOSED FLOOR PLAN
A-4.1	PROPOSED UPPER FLOOR PLAN
A-5.0	PROPOSED ELECTRICAL PLAN
A-5.1	PROPOSED ELECTRICAL PLAN
A-6.0	INTERIOR ELEVATIONS
A-7.0	EXISTING EXTERIOR ELEVATIONS
A-8.0	PROPOSED EXTERIOR ELEVATIONS

CONTACTS

OWNER
SIAMAK AGAH
10654 MEMORIAL DRIVE
HOUSTON, TEXAS 77024
P.713.932.0909

CONTRACTOR
AGGIE CUSTOM HOMES LLC
HOUSTON, TEXAS 77056
P. 713.823.3306
CONTACT: KOMY FOROUHIDEH

ARCHITECT
PURSER ARCHITECTURAL
14780 MEMORIAL DRIVE
SUITE 215
HOUSTON, TEXAS 77079
P 281.293.9291
CONTACT: GUILLERMO SAHAGUN

NOTES

ALL CONSTRUCTION SHALL BE PERFORMED IN ACCORDANCE WITH APPLICABLE CODES, INCLUDING THE 2012 INTERNATIONAL RESIDENTIAL CODE.

BEFORE COMMENCING WORK, CONTRACTOR SHALL PERFORM A SURVEY OF EXISTING CONDITIONS IN ORDER TO VERIFY ACCURACY AND COMPATIBILITY OF DIMENSIONS AND CONDITIONS SHOWN ON THE DRAWINGS WITH ACTUAL CONDITIONS. CONTRACTOR SHALL NOTIFY ARCHITECT IMMEDIATELY, IN WRITING, OF ALL DISCREPANCIES FOUND WHICH MAY AFFECT THE WORK. PROCEEDING WITH THE WORK SHALL CONSTITUTE ACCEPTANCE BY THE CONTRACTOR THAT CONDITIONS ARE CORRECT AND THE CONTRACTOR ASSUMES FULL RESPONSIBILITY FOR CONDITIONS.

REPAIR AND REPLACE TO ITS ORIGINAL CONDITIONS ANY EXISTING ADJACENT CONSTRUCTION AFFECTED BY DEMOLITION AND NEW CONSTRUCTION WORK.

ALL CONSTRUCTION SHALL BE COMPLETE, FINISHED, AND OF THE HIGHEST QUALITY WORKMANSHIP.

APPROXIMATE SQ. FT.

EXISTING FIRST FLOOR:

- LIVING AREA: 1,268 SF
- PORCH : 381 SF

EXISTING SECOND FLOOR:

- LIVING AREA: 951 SF

TOTAL:

- 2,219 SF OF LIVING AREA
- 381 SF OF NON LIVING AREA
- 2,600 SF OF TOTAL COVERED AREA

PURSER ARCHITECTURAL INC.
14780 MEMORIAL DRIVE SUITE 215
HOUSTON, TEXAS 77079
TEL: 281 · 293 · 9291
FAX: 281 · 293 · 7246
E-MAIL: PURSERA@GMAIL.COM
WWW.DONPURSER.COM

OFFICE

720 W. ALABAMA
HOUSTON, TX 77006

DATE OF ISSUE

FIRST DRAFT	08.05.2016

REGISTERED ARCHITECT
DONALD G. PURSER
9685
STATE OF TEXAS

08.05.16

These drawings and specifications are copyrighted: they are and shall remain the sole property of Purser Architectural, Inc. ("Architect") unless otherwise noted. These drawings are not to be used on other projects or extensions to this project except by agreement with appropriate compensation to Architect. Contractor is responsible for confirming and correlating dimensions at job site. Architect will not be responsible for construction means, methods, techniques or procedures or for safety precautions and programs in connection with this project. Reproduction of these drawings is prohibited without permission from architect. These drawings are not valid for construction purposes with out seal and signature from licensed architect.

PLAN NUMBER

2219

DATE: 08/05/2016

SHEET NUMBER:

A00

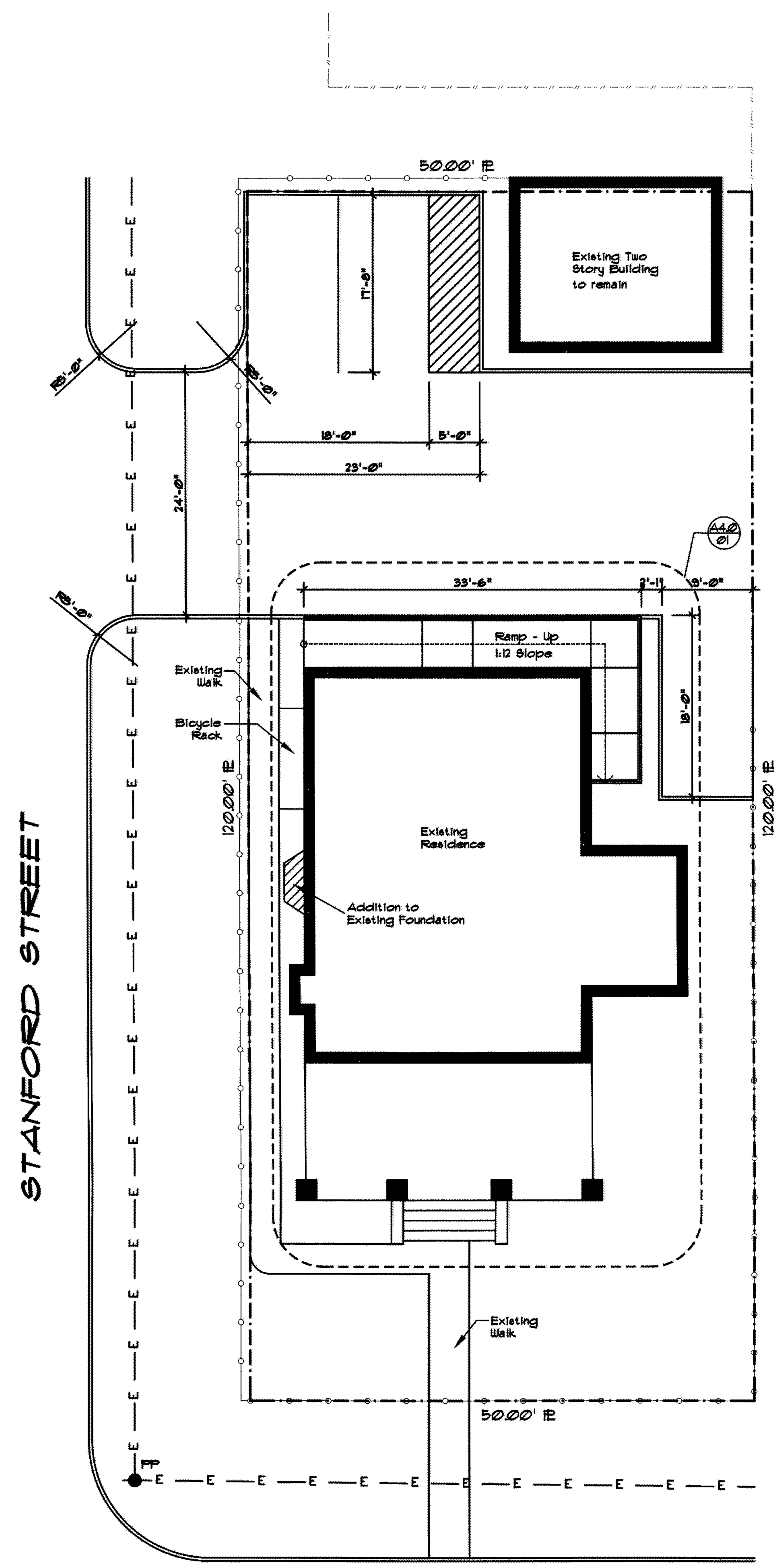

WEST ALABAMA AVENUE

02 PROPOSED SITE PLAN
1/8" = 1'-0"

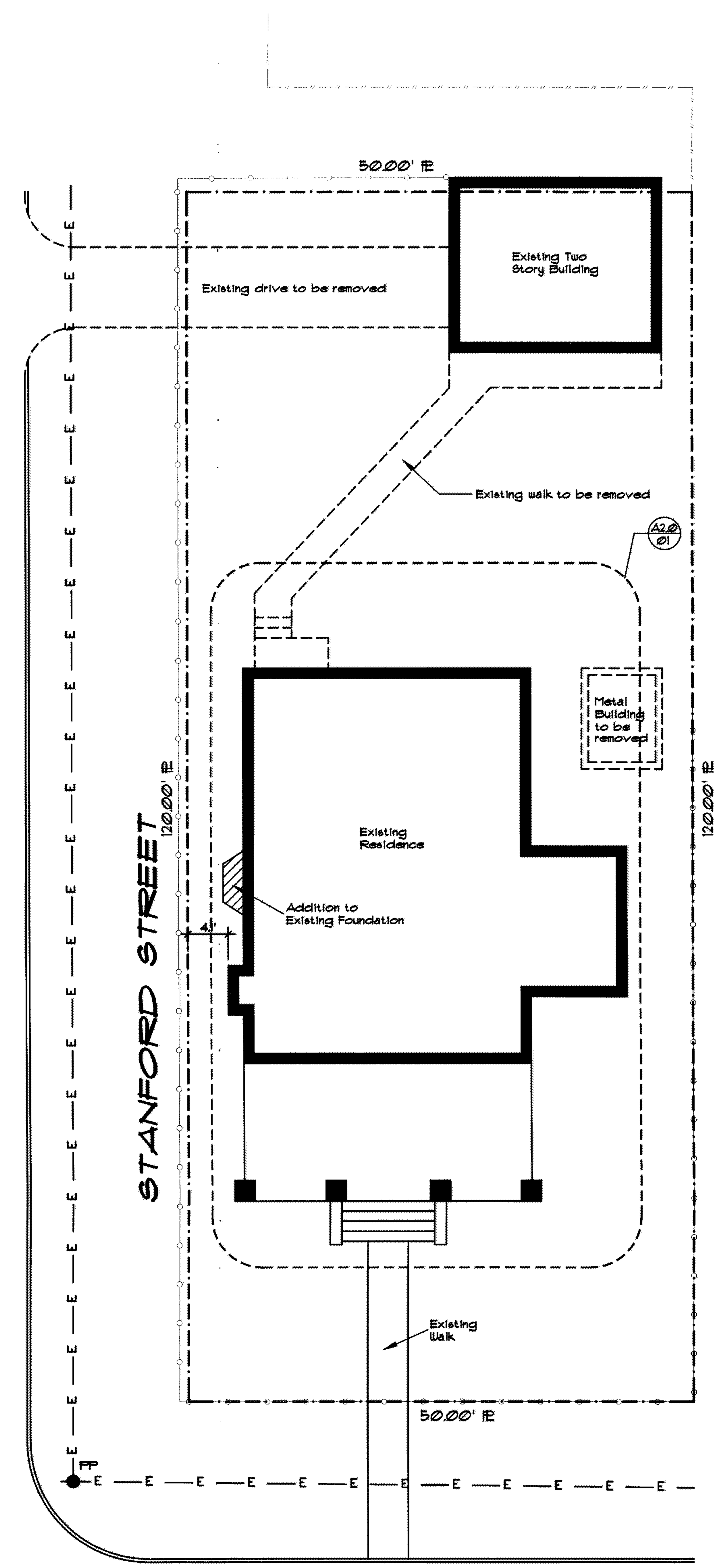

WEST ALABAMA AVENUE

01 EXISTING SITE PLAN
1/8" = 1'-0"

LEGEND

(heavy solid line)	Existing construction to remain
(dashed line)	Existing construction to be removed
(dash line)	Existing Wood Fence
(line with circles)	Existing Chain Link
PP	Existing Power Pole
— E — E —	Existing Overhead Powerline

PROPERTY INFORMATION

Lot: Eight (8)
Block: Seventeen (17)
Subd.: Montrose

PAI

PURSER ARCHITECTURAL INC.
14780 MEMORIAL DRIVE SUITE 215
HOUSTON, TEXAS 77079
TEL: 281 · 293 · 9291
FAX: 281 · 293 · 7246
E-MAIL: PURSERAI@GMAIL.COM
WWW.DONPURSER.COM

OFFICE

720 W. ALABAMA
HOUSTON, TX 77006

DATE OF ISSUE

FIRST DRAFT	08.05.2016

REGISTERED ARCHITECT · DONALD E. PURSER · 8689 · STATE OF TEXAS

These drawings and specifications are copyrighted: they are and shall remain the sole property of Purser Architectural, Inc. ("Architect") unless otherwise noted. These drawings are not to be used on other projects or extensions to this project except by agreement with appropriate compensation to Architect. Contractor is responsible for confirming and correlating dimensions at job site. Architect will not be responsible for construction means, methods, techniques or procedures or for safety precautions and programs in connection with this project. Reproduction of these drawings is prohibited without permission from architect. These drawings are not valid for construction purposes with out seal and signature from licensed architect.

PLAN NUMBER
2219

DATE: 08/05/2016

SHEET NUMBER:
A1.0

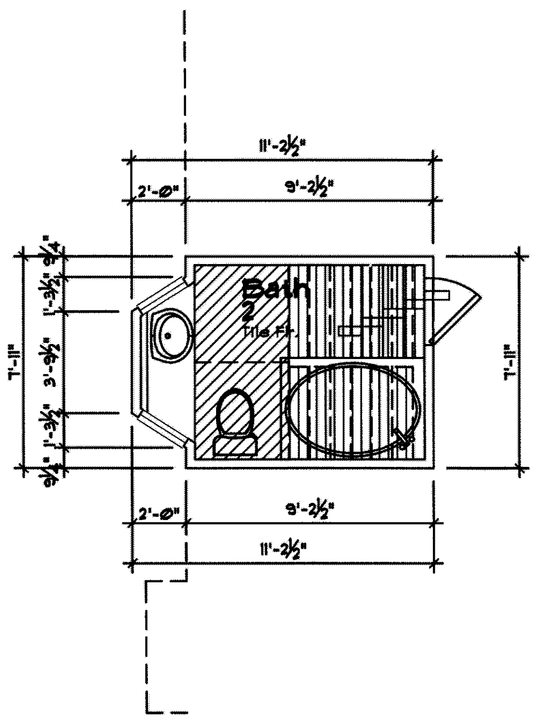

CRAWLSPACE At Stairs

1/4" = 1'-0"

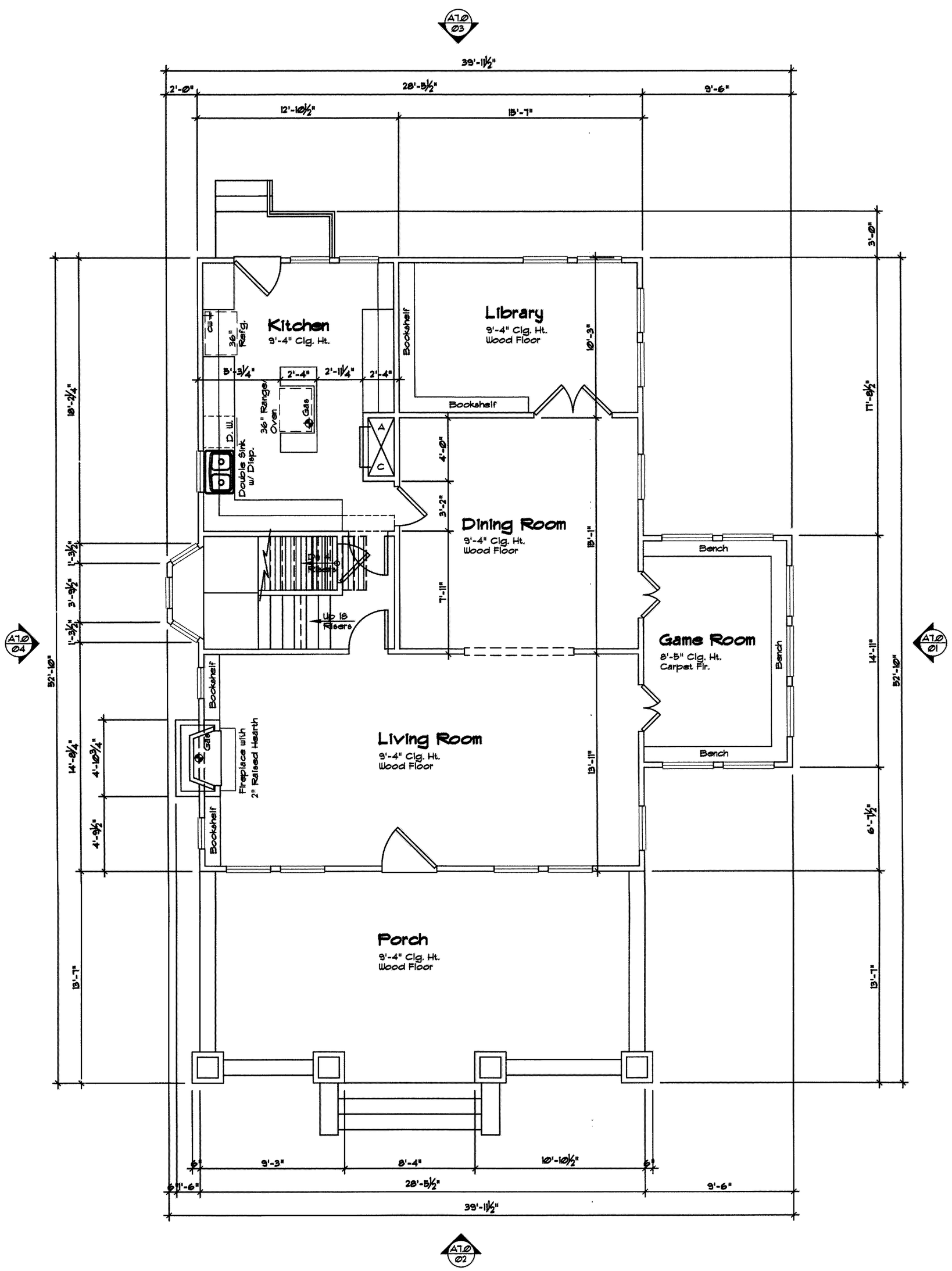

EXISTING FIRST FLOOR PLAN

1/4" = 1'-0"

LEGEND

- New Construction (interior)
- Existing construction to remain
- Interior Elevation Symbol
- Exterior Elevation Symbol

PURSER ARCHITECTURAL INC.
14760 MEMORIAL DRIVE, SUITE 215
HOUSTON, TEXAS 77079
TEL: 281 · 293 · 9291
FAX: 281 · 293 · 7246
E-MAIL: PURSERA@GMAIL.COM
WWW.DONPURSER.COM

OFFICE

720 W. ALABAMA
HOUSTON, TX 77006

DATE OF ISSUE

FIRST DRAFT	08/05/2016

REGISTERED ARCHITECT
DONALD G. PURSER
9689
STATE OF TEXAS

08/05/16

These drawings and specifications are copyrighted. they are and shall remain the sole property of Purser Architectural, Inc. ("Architect") unless otherwise noted. These drawings are not to be used on other projects or extensions to this project except by agreement with appropriate compensation to Architect. Contractor is responsible for confirming and correlating dimensions at job site. Architect will not be responsible for construction means, methods, techniques or procedures or for safety precautions and programs in connection with this project. Reproduction of these drawings is prohibited without permission from architect. These drawings are not valid for construction purposes with out seal and signature from licensed architect.

PLAN NUMBER

2219

DATE: 08/05/2016

SHEET NUMBER:

A2.0

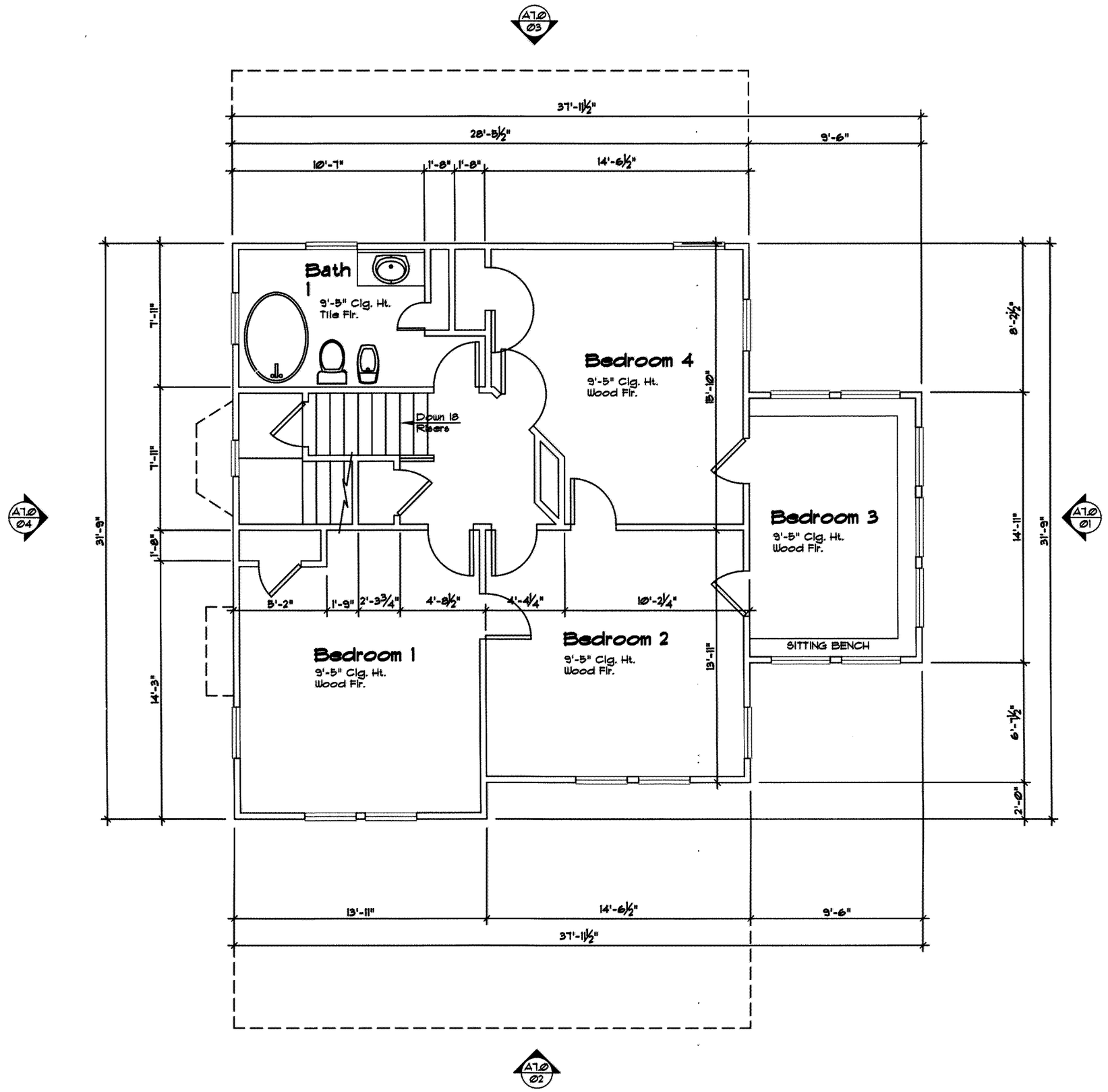

EXISTING FIRST FLOOR PLAN

1/4" = 1'-0"

LEGEND

- New Construction (Interior)
- Existing construction to remain
- Interior Elevation Symbol
- Exterior Elevation Symbol

PAI

PURSER ARCHITECTURAL INC.
14780 MEMORIAL DRIVE SUITE 215
HOUSTON, TEXAS 77079
TEL: 281 · 293 · 9291
FAX: 281 · 293 · 7246
E-MAIL: PURSERA1@GMAIL.COM
WWW.DONPURSER.COM

OFFICE

720 W. ALABAMA
HOUSTON, TX 77006

DATE OF ISSUE

FIRST DRAFT	08/05/2016

REGISTERED ARCHITECT
DONALD G. PURSER
08/05/16

These drawings and specifications are copyrighted they are and shall remain the sole property of Purser Architectural, Inc. ("Architect") unless otherwise noted. These drawings are not to be used on other projects or extensions to this project except by agreement with appropriate compensation to Architect. Contractor is responsible for confirming and correlating dimensions at job site. Architect will not be responsible for construction means, methods, techniques or procedures or for safety precautions and programs in connection with this project. Reproduction of these drawings is prohibited without permission from architect. These drawings are not valid for construction purposes with out seal and signature from licensed architect.

PLAN NUMBER

2219

DATE: 08/05/2016

SHEET NUMBER:

A2.1

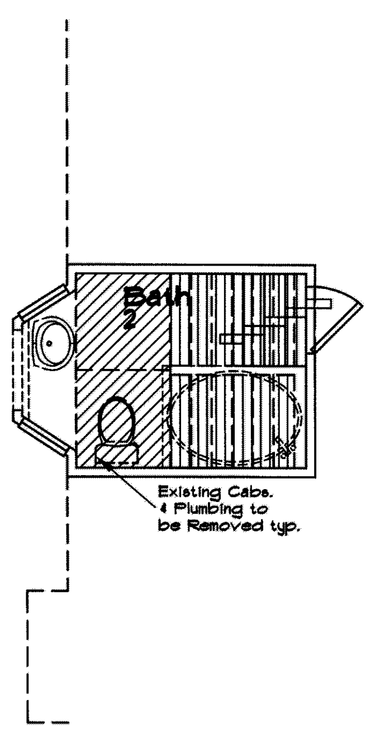

CRAWLSPACE At Stairs

1/4" = 1'-0"

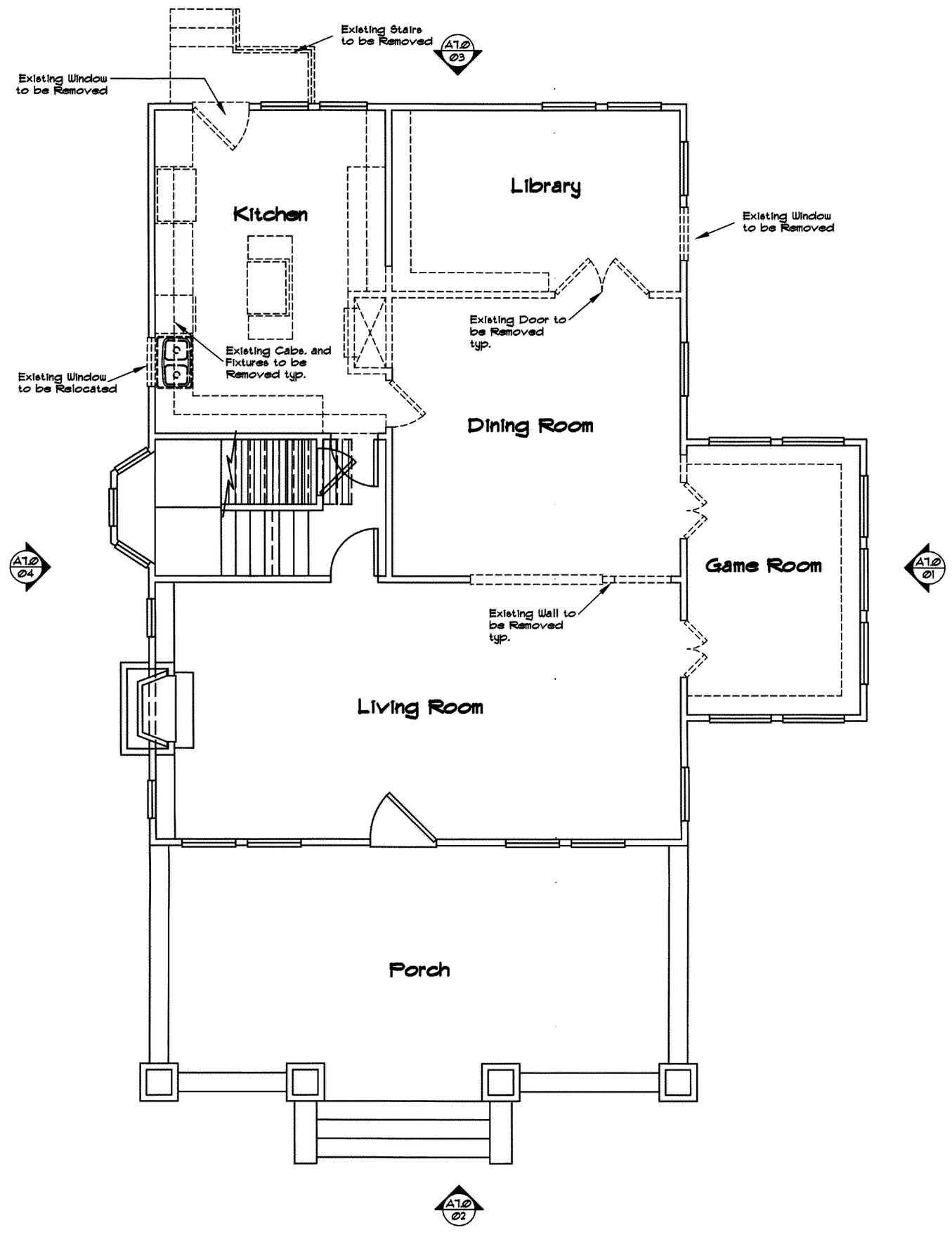

FIRST FLOOR DEMOLITION PLAN

1/4" = 1'-0"

LEGEND

Existing construction to remain

Existing construction to be removed

Interior Elevation Symbol

Exterior Elevation Symbol

PURSER ARCHITECTURAL INC.
14760 MEMORIAL DRIVE SUITE 215
HOUSTON, TEXAS 77079
TEL: 281 · 293 · 9291
FAX: 281 · 293 · 7246
E-MAIL: PURSERA@GMAIL.COM
WWW.DONPURSER.COM

OFFICE

720 W. ALABAMA
HOUSTON, TX 77006

DATE OF ISSUE

FIRST DRAFT	08.05.2016

REGISTERED ARCHITECT
DONALD G. PURSER
9689
STATE OF TEXAS

CONTRACT 08.05.16

These drawings and specifications are copyrighted: they are and shall remain the sole property of Purser Architectural, Inc. ("Architect") unless otherwise noted. These drawings are not to be used on other projects or extensions to this project except by agreement with appropriate compensation to Architect. Contractor is responsible for confirming and correlating dimensions at job site. Architect will not be responsible for construction means, methods, techniques or procedures or for safety precautions and programs in connection with this project. Reproduction of these drawings is prohibited without permission from architect. These drawings are not valid for construction purposes with out seal and signature from licensed architect.

PLAN NUMBER

2219

DATE: 08/05/2016

SHEET NUMBER:

A3.0

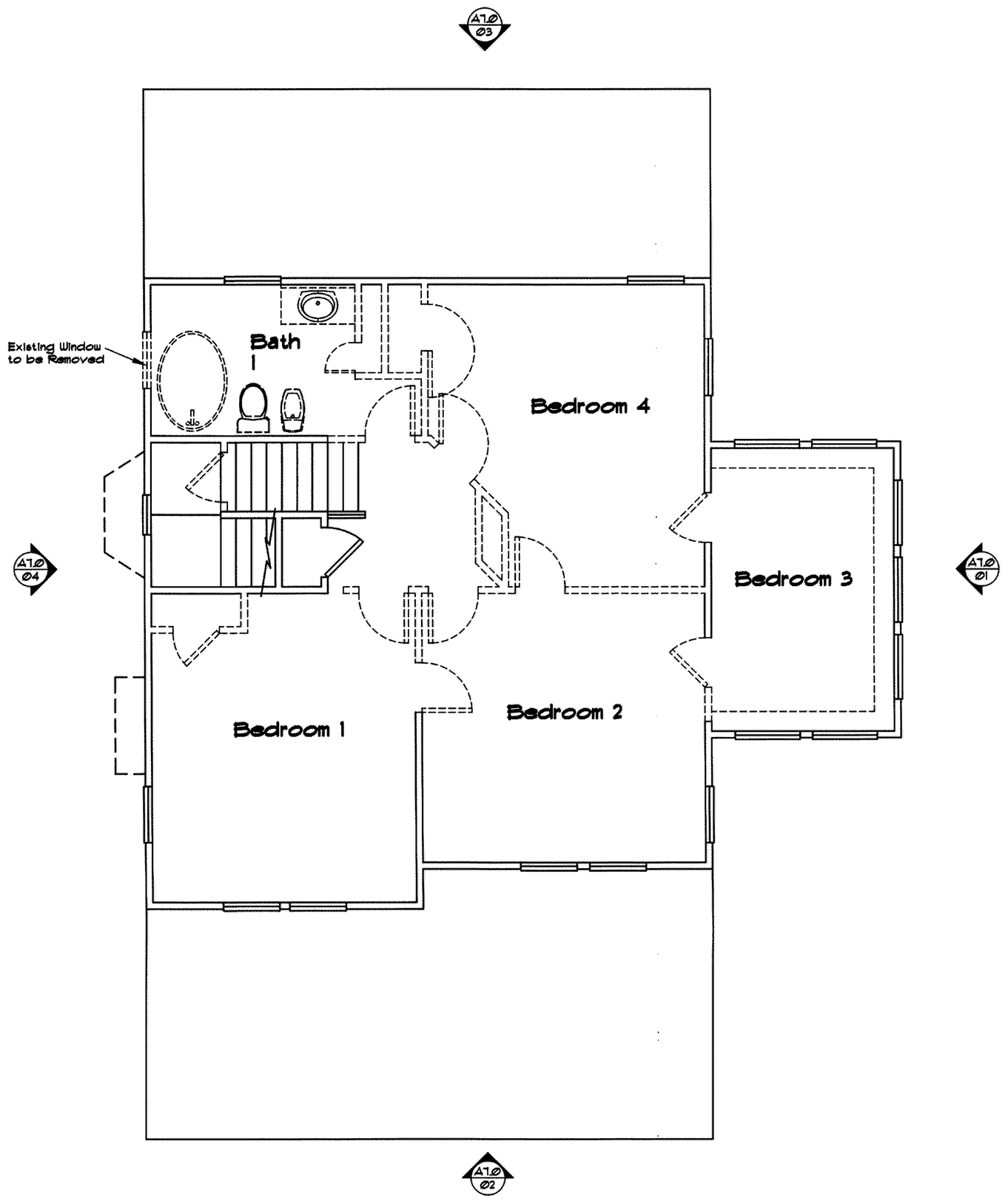

SECOND FLOOR DEMOLITION PLAN

1/4" = 1'-0"

LEGEND

- Existing construction to remain
- Existing construction to be removed
- Interior Elevation Symbol
- Exterior Elevation Symbol

PURSER ARCHITECTURAL INC
14760 MEMORIAL DRIVE SUITE 23
HOUSTON, TEXAS 77079
TEL: 281 · 293 · 9291
FAX: 281 · 293 · 7246
E-MAIL: PURSERA@GMAIL.COM
WWW.DONPURSER.COM

OFFICE

720 W. ALABAMA
HOUSTON, TX 77006

DATE OF ISSUE

FIRST DRAFT	08/05/2016

REGISTERED ARCHITECT
DONALD G. PURSER
8689
STATE OF TEXAS

08/05/16

These drawings and specifications are copyrighted; they are and shall remain the sole property of Purser Architectural, Inc. ("Architect") unless otherwise noted. These drawings are not to be used on other projects or extensions to this project except by agreement with appropriate compensation to Architect. Contractor is responsible for confirming and correlating dimensions at job site. Architect will not be responsible for construction means, methods, techniques or procedures or for safety precautions and programs in connection with this project. Reproduction of these drawings is prohibited without permission from architect. These drawings are not valid for construction purposes with out seal and signature from licensed architect.

PLAN NUMBER

2219

DATE: 08/05/2016

SHEET NUMBER:

A3.1

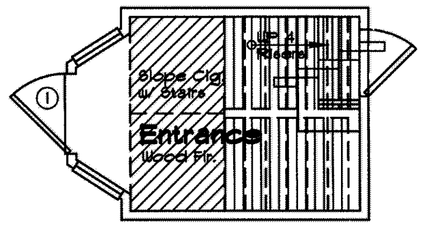

CRAWLSPACE At Stairs

1/4" = 1'-0"

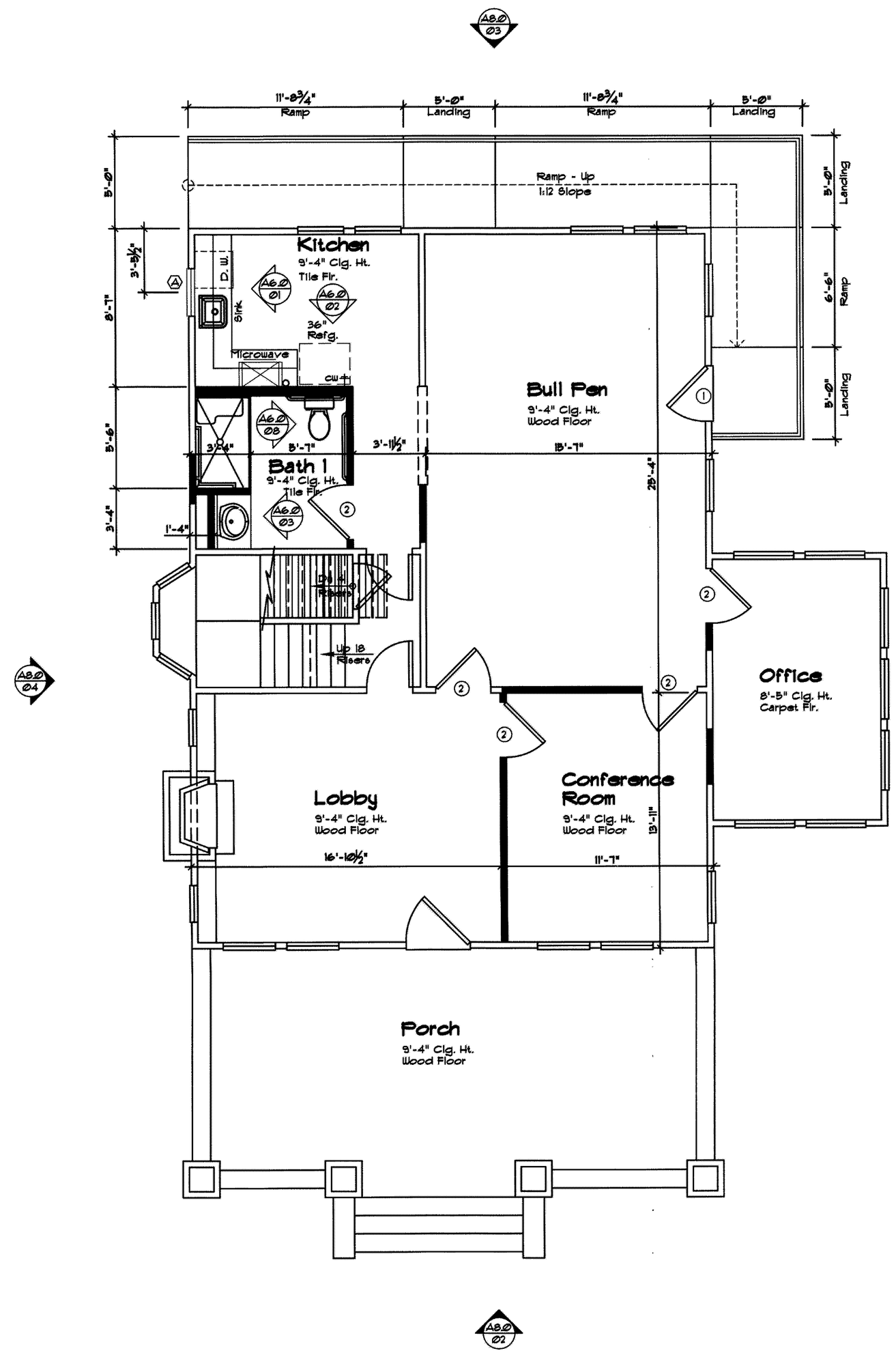

PROPOSED FIRST FLOOR PLAN

1/4" = 1'-0"

LEGEND

New Construction (Interior)

Existing construction to remain

Interior Elevation Symbol

Exterior Elevation Symbol

SCHEDULES

DOORS

Mark	Size	Description
1	3' x 6'-8"'	To Match Existing
2	3' x 6'-8"	Solid Core Door - To Match Existing

WINDOWS

Mark	Size	Description
A	EXISTING	EXISTING WINDOW THAT WAS RELOCATED

NOTES

All First Floor Exterior Walls to be 2 x 6 Studs at 16" o. c.
All angles 45°.
1/2" Gypboard walls and ceilings.
5/8" Type "X" gypboard walls and ceilings
at garage and beneath stairs.

Tile floors at baths.
Tile walls at tubs.
Tile walls at showers.
All open showers and tubs to be finished with a
non absorbent surface to a height not less than 72"
above drain inlet over water proof gypboard (greenrock).
All glass at bathing areas shall be tempered safety glass
and must comply with IBC 2012
Provide ventilation at all baths and utility room
through natural or mechanical means and comply with IBC 2012
All guardrails shall be 42" high. All handrails to be
34" to 38" above nose of tread and comply with IBC 2012
All spindles for handrails and guardrails to be spaced no
greater than 3-7/8" apart so that a 4" sphere cannot fit through.
Synthetic marble drain and splash at vanities.
8' Head height at all doors and COs at first floor
8' Head height at all doors and COs at second and third floor
R316.2 Guard Opening Limitations. Required guards on open sides of
stairways, raised floor areas, balconies, and porches shall have
intermediate rails or ornamental closures that do not allow passage of
a sphere 4 inches (102 mm) in diameter. Required guards shall not be
constructed with horizontal rails or other ornamental pattern that
results in the latter effect.
Exceptions: The triangular openings formed by the riser, tread and
bottom rail of a guard at the open side of a stairway are permitted to
be of such a size that a sphere of 6" (152 mm) cannot pass through.

The Passageway shall have continuous solid flooring in accordance with
Chapter 5 of the IRC not less than 24" wide. A level service space at
least 30-inches deep and 30-inches wide shall be present along all
sides of the appliance where access is required. The Clear access
opening dimensions shall be a minimum of 30-inches by 54-inches where
such dimensions are large enough to allow removal of the largest
appliance.
G2406.2 Elevation of ignition source. Equipment and appliances
having an ignition source shall be elevated such that the source of
ignition is not less than 18" (457mm) above the the flood in hazardous
locations and private garages. For the purpose of this sections, rooms
or spaces that are not part of the living space of a dwelling unit and
that communicate directly with a private garage through openings shall
be considered to be part of the private garage.

TABLE R301.4
MINIMUM UNIFORMLY DISTRIBUTED LIVE LOADS
(in pounds per square foot)

USE	LIVE LOAD
EXTERIOR BALCONIES	60
DECKS[f]	40
FIRE ESCAPES	40
PASSENGER VEHICLE GARAGES[a]	50
ATTICS WITHOUT STORAGE[BC]	10
ATTICS WITH STORAGE[BC]	20
ROOMS OTHER THAN SLEEPING ROOMS	40
SLEEPING ROOMS	30
STAIRS	40
GUARDRAILS AND HANDRAILS[D]	200

FOR SI: 1 lb per square foot = 0.0479 kN/m2, 1 square inch = 645 mm2,
1 lb = 4.45 N

a. Elevated Garage Floors shall be capable of supporting a 2000 lb load applied over a 20 square inch area.
b. No storage with roof slope not over 3 units in 12 units
c. Individual stair treads shall be designed for the uniformly distributed live load or a 300 lb. concentrated load acting over an area of of 4 sq inches , whichever produces the greater stresses.
d. A single concentrated load applied in any direction at any point along the top
e. Attics constructed with wood trusses shall be designed in accordance with Section R802.10.1
f. See Section R502.2.1 for decks applied to exterior walls

PURSER ARCHITECTURAL INC.
14780 MEMORIAL DRIVE SUITE 215
HOUSTON, TEXAS 77079
TEL: 281 · 293 · 9291
FAX: 281 · 293 · 7246
E-MAIL: PURSERA@GMAIL.COM
WWW.DONPURSER.COM

OFFICE

720 W. ALABAMA
HOUSTON, TX 77006

DATE OF ISSUE

FIRST DRAFT	08/05/2016

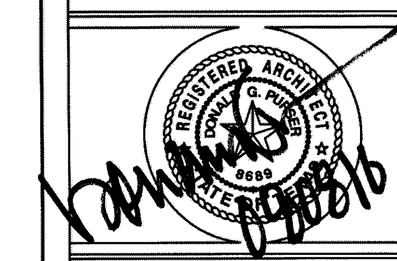

These drawings and specifications are copyrighted: they are and shall remain the sole property of Purser Architectural, Inc. ("Architect") unless otherwise noted. These drawings are not to be used on other projects or extensions to this project except by agreement with appropriate compensation to Architect. Contractor is responsible for confirming and correlating dimensions at job site. Architect will not be responsible for construction means, methods, techniques or procedures or for safety precautions and programs in connection with this project. Reproduction of these drawings is prohibited without permission from architect. These drawings are not valid for construction purposes with out seal and signature from licensed architect.

PLAN NUMBER

2219

DATE: 08/05/2016

SHEET NUMBER:

A4.0

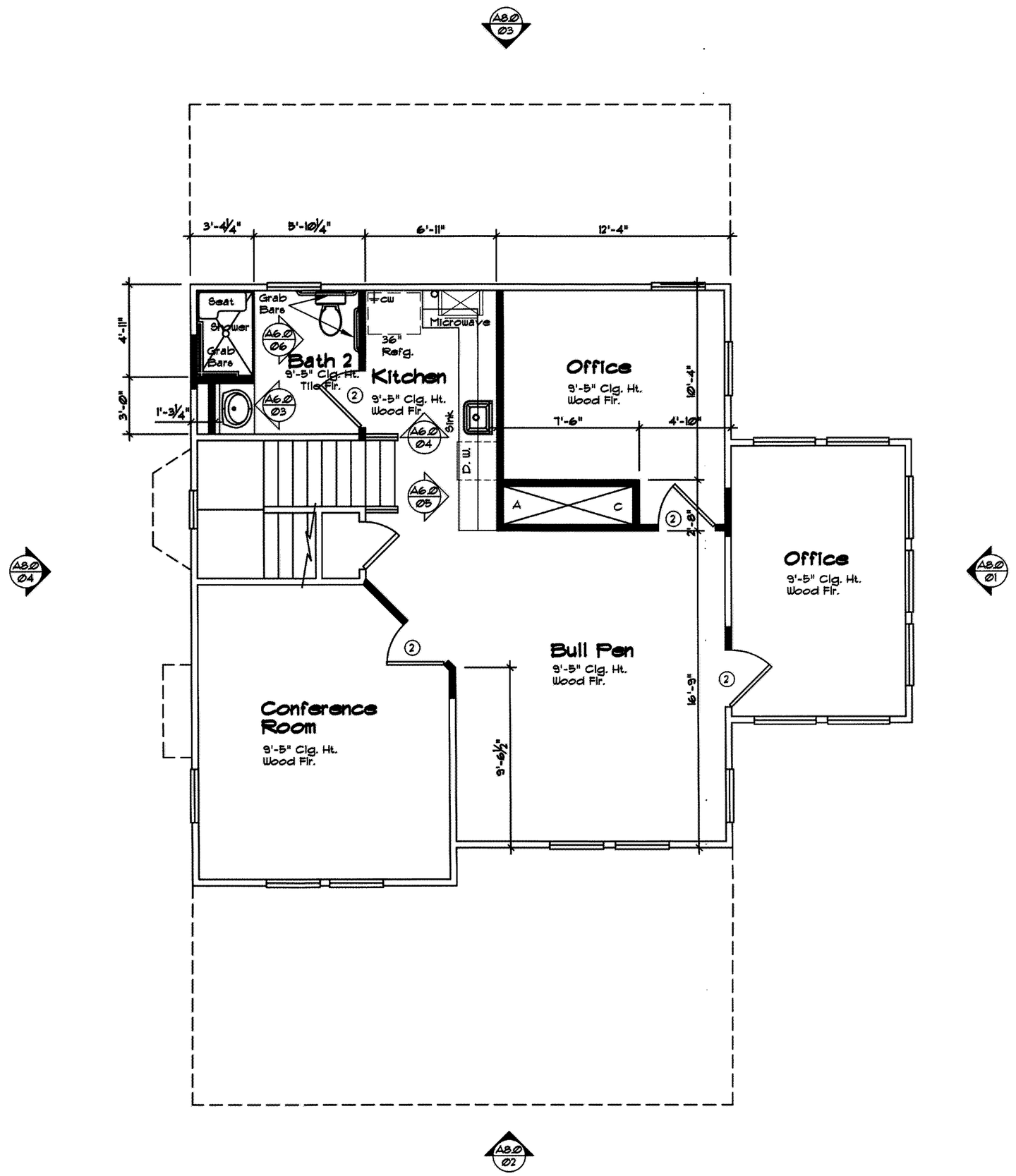

PROPOSED SECOND FLOOR PLAN

1/4" = 1'-0"

LEGEND

New Construction (Interior)

Existing construction to remain

Interior Elevation Symbol

Exterior Elevation Symbol

SCHEDULES

DOORS

Mark	Size	Description
1	3' x 6'-8"	To Match Existing
2	3' x 6'-8"	Solid Core Door - To Match Existing

WINDOWS

Mark	Size	Description
A	EXISTING	EXISTING WINDOW THAT WAS RELOCATED

NOTES

All First Floor Exterior Walls to be 2 x 6 Studs at 16" o. c.
All angles 45°.
1/2" Gypboard walls and ceilings.
5/8" Type 'X' gypboard walls and ceilings at garage and beneath stairs.

Tile floors at baths.
Tile walls at tubs.
Tile walls at showers.
All open showers and tubs to be finished with a non absorbent surface to a height not less than 72" above drain inlet over water proof gypboard (greenrock).
All glass at bathing areas shall be tempered safety glass and must comply with IBC 2012
Provide ventilation at all baths and utility room through natural or mechanical means and comply with IBC 2012
All guardrails shall be 42" high. All handrails to be 34" to 38" above nose of tread and comply with IBC 2012
All spindles for handrails and guardrails to be spaced no greater than 3-7/8" apart so that a 4" sphere cannot fit through.
Synthatic marble drain and splash at vanities.
8' Head height at all doors and C.O.s at first floor
8' Head height at all doors and C.O.s at second and third floor
R312 Guard Opening Limitations. Required guards on open sides of stairways, raised floor areas, balconies, and porches shall have intermediate rails or ornamental closures that do not allow passage of a sphere 4 inches (102 mm) in diameter. Required guards shall not be constructed with horizontal rails or other ornamental pattern that results in the latter effect.
Exceptions: The triangular openings formed by the riser, tread and bottom rail of a guard at the open side of a stairway are permitted to be of such a size that a sphere of 6" (152 mm) cannot pass through.

The Passageway shall have continuous solid flooring in accordance with Chapter 5 of the IRC not less than 24" wide. A level service space at least 30-inches deep and 30-inches wide shall be present along all sides of the appliance where access is required. The clear access opening dimensions shall be a minimum of 30-inches by 54-inches where such dimensions are large enough to allow removal of the largest appliance.
G2408.2 Elevation of ignition source. Equipment and appliances having an ignition source shall be elevated such that the source of ignition is not less than 18" (457mm) above the the flood in hazardous locations and private garages. For the purpose of this sections, rooms or spaces that are not part of the living space of a dwelling unit and that communicate directly with a private garage through openings shall be considered to be part of the private garage.

TABLE R301.4
MINIMUM UNIFORMLY DISTRIBUTED LIVE LOADS
(in pounds per square foot)

USE	LIVE LOAD
EXTERIOR BALCONIES	60
DECKS[f]	40
FIRE ESCAPES	40
PASSENGER VEHICLE GARAGES[a]	50
ATTICS WITHOUT STORAGE[b,c]	10
ATTICS WITH STORAGE[b,c]	20
ROOMS OTHER THAN SLEEPING ROOMS	40
SLEEPING ROOMS	30
STAIRS	40
GUARDRAILS AND HANDRAILS[d]	200

FOR SI: 1 lb per square foot = 0.0479 kN/m2, 1 square inch = 645 mm2, 1 lb = 4.45 N

a. Elevated Garage Floors shall be capable of supporting a 2000 lb load applied over a 20 square inch area.
b. No storage with roof slopes not over 3 units in 12 units
c. Individual stair treads shall be designed for the uniformly distributed live load or a 300 lb. concentrated load acting over an area of of 4 sq inches , whichever produces the greater stresses.
d. a single concentrated load applied in any direction at any point along the top
e. Attics constructed with wood trusses shall be designed in accordance with Section R802.10.1
f. See Section R502.2.1 for decks applied to exterior walls

PURSER ARCHITECTURAL INC.
14760 MEMORIAL DRIVE SUITE 215
HOUSTON, TEXAS 77079
TEL: 281 · 293 · 9291
FAX: 281 · 293 · 7246
E-MAIL: PURSERA@GMAIL.COM
WWW.DONPURSER.COM

OFFICE

720 W. ALABAMA
HOUSTON, TX 77006

DATE OF ISSUE

FIRST DRAFT	08/05/2016

REGISTERED ARCHITECT DONALD G. PURSER 9889 STATE OF TEXAS

These drawings and specifications are copyrighted: they are and shall remain the sole property of Purser Architectural, Inc. ("Architect") unless otherwise noted. These drawings are not to be used on other projects or extensions to this project except by agreement with appropriate compensation to Architect. Contractor is responsible for confirming and correlating dimensions at job site. Architect will not be responsible for construction means, methods, techniques or procedures or for safety precautions and programs in connection with this project. Reproduction of these drawings is prohibited without permission from architect. These drawings are not valid for construction purposes with out seal and signature from licensed architect.

PLAN NUMBER

2219

DATE: 08/05/2016

SHEET NUMBER:

A4.1

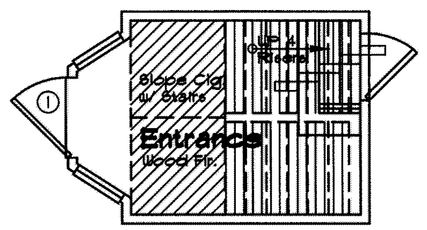

CRAWLSPACE At Stairs

1/4" = 1'-0"

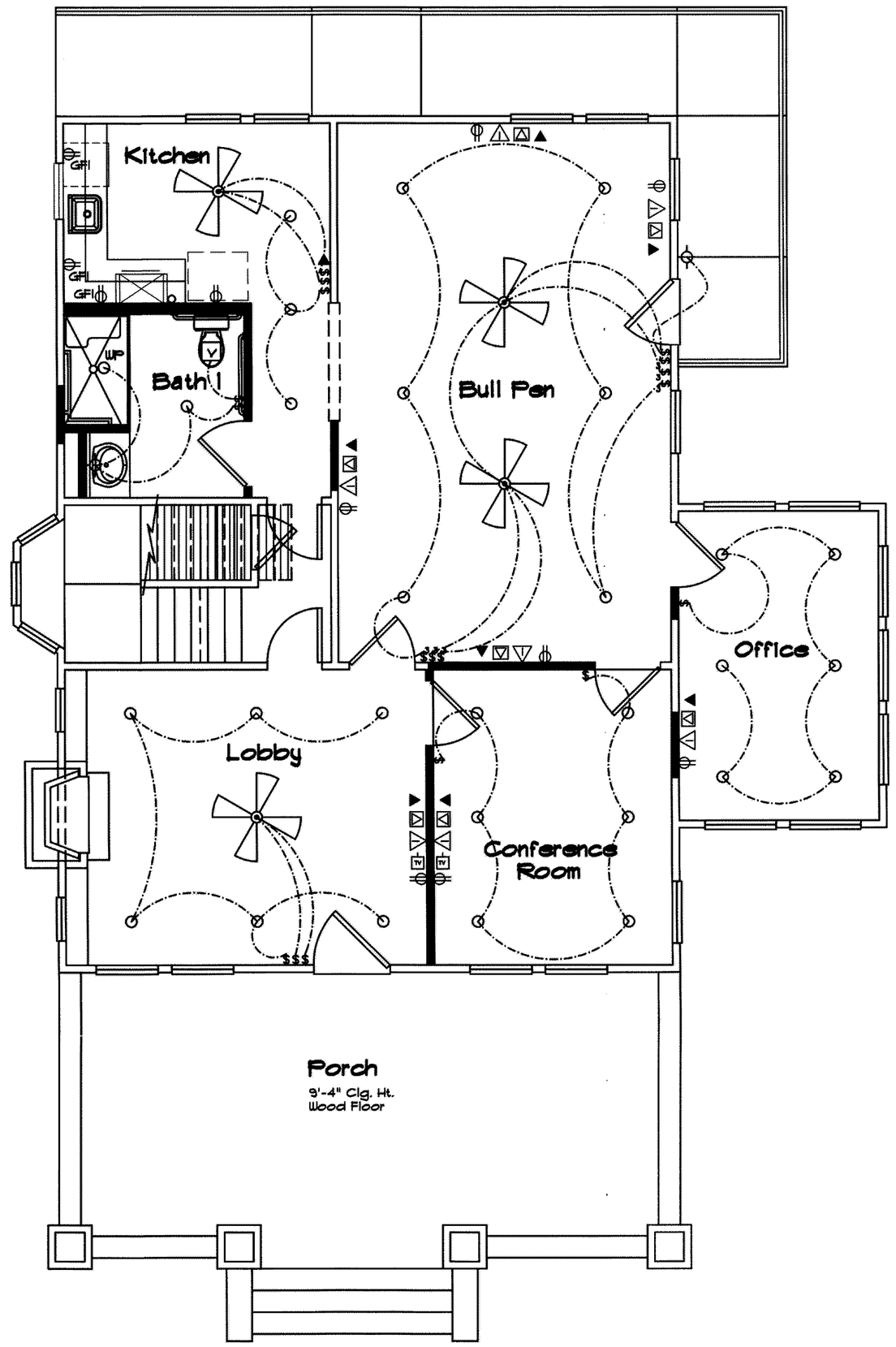

PROPOSED FIRST FLOOR ELECTRICAL

1/4" = 1'-0"

LEGEND

- New Construction (Interior)
- Existing construction to remain
- Interior Elevation Symbol
- Exterior Elevation Symbol
- SCONCE LIGHT
- 40W MINICAN RECESSED LIGHT
- RECESSED CAN LIGHT
- HF SMALL HANGING FIXTURE
- HF LARGE HANGING FIXTURE
- SURFACE MOUNT CEILING LIGHT
- WALL MOUNT LIGHT
- EYEBALL SPOT RECESSED LIGHT
- TRACK LIGHTING
- 1x4 FLUORESCENT LIGHT 2 LAMP
- 2x4 FLUORESCENT LIGHT 4 LAMP
- PC PORCELAIN LIGHT FIXT. WITH PULL CHORD
- MS MOTION SENSOR
- FLOOD LIGHT
- DISCONNECT
- $ SINGLE POLE SWITCH
- $3 THREE WAY SWITCH
- $4 FOUR WAY SWITCH
- DIMMER SWITCH
- THREE WAY DIMMER SWITCH
- $T TIMER SWITCH
- PUSH BUTTON
- ROPE LIGHTS
- WALL SCONCE
- UNDER UPPER CABINET FLUOR. STRIP LIGHT
- SMOKE & C.O. DETECTOR AC/DC HARD-WIRED AND INTERCONNECTED W/ BATTERY BACKUP
- HI-VOLUME VENT FAN TO EXTERIOR
- CEILING FAN
- CEILING FAN WITH LIGHT
- 110 v FLOOR OUTLET
- 110 v AT CEILING
- 110 v OUTLET
- 110 v QUAD OUTLET
- 220 v OUTLET
- WP 110 v WATERPROOF G.F.I. OUTLET
- GFI 110 v GROUND FAULT INTERRUPTER OUTLET
- HL HEAT LAMP
- VI VENT / LIGHT
- TV TELEVISION ANTENNA
- TELEPHONE OUTLET
- FLOOR TELEPHONE OUTLET
- DATA PORT
- INTERNET NETWORK
- JUNCTION BOX
- THERMOSTAT
- CHIME CHIMES
- KP ALARM KEY PAD
- ALARM NOISE BOX
- AUDIO/VISUAL ALARM

R317.1 When more than one smoke alarm is required to be installed within an individual dwelling unit the alarm devices shall be interconnected in such a manner that the actuation of one alarm will activate all the alarms in the individual unit. The alarm shall be clearly audible in all bedrooms over background noise levels with all intervening doors closed. R317.2 Power Source. In new Construction , the required smoke alarms shall receive their primary power from the building wiring when such wiring is served from a commercial source, and when primary power is interrupted, shall receive power from a battery. Wiring shall be permanent and without a disconnecting switch other than those required for over current protection. Smoke Alarms shall be permitted to be battery operated when installed in buildings without commercial power or in buildings that undergo alterations, repairs or additions regulated by section R317.1.1

PURSER ARCHITECTURAL INC.
14700 MEMORIAL DRIVE SUITE 213
HOUSTON, TEXAS 77079
TEL: 281 · 293 · 9291
FAX: 281 · 293 · 7246
E-MAIL: PURSERA@GMAIL.COM
WWW.DONPURSER.COM

OFFICE

720 W. ALABAMA
HOUSTON, TX 77006

DATE OF ISSUE

FIRST DRAFT	08/05/2016

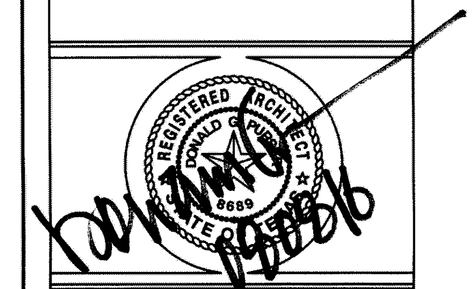

These drawings and specifications are copyrighted: they are and shall remain the sole property of Purser Architectural, Inc. ("Architect") unless otherwise noted. These drawings are not to be used on other projects or extensions to this project except by agreement with appropriate compensation to Architect. Contractor is responsible for confirming and correlating dimensions at job site. Architect will not be responsible for construction means, methods, techniques or procedures or for safety precautions and programs in connection with this project. Reproduction of these drawings is prohibited without permission from architect. These drawings are not valid for construction purposes with out seal and signature from licensed architect.

PLAN NUMBER

2219

DATE: 08/05/2016

SHEET NUMBER:

A5.0

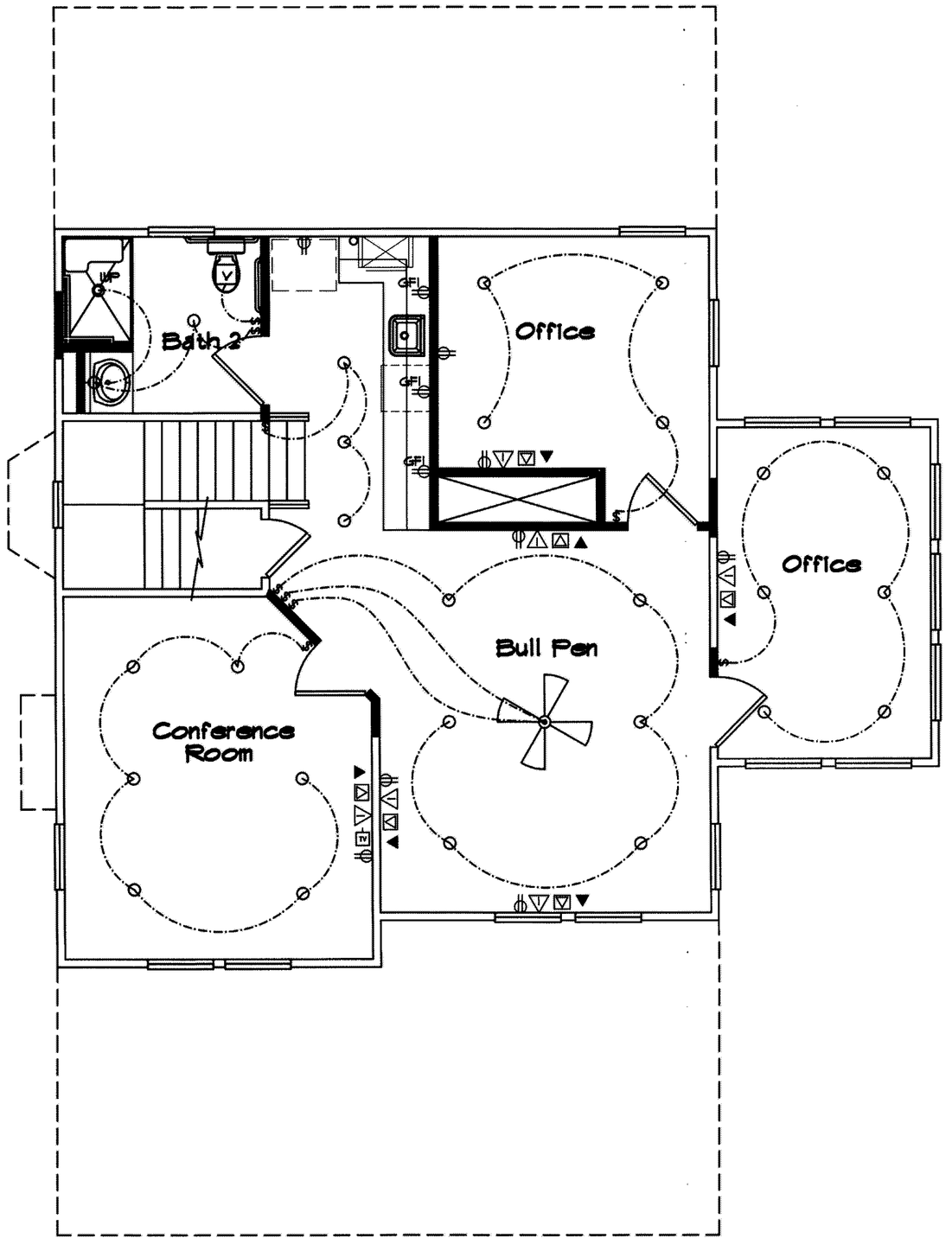

PROPOSED SECOND FLOOR ELECTRICAL

1/4" = 1'-0"

LEGEND

- New Construction (Interior)
- Existing construction to remain
- Interior Elevation Symbol
- Exterior Elevation Symbol
- SCONCE LIGHT
- 4ØW MINICAN RECESSED LIGHT
- RECESSED CAN LIGHT
- HF SMALL HANGING FIXTURE
- HF LARGE HANGING FIXTURE
- SURFACE MOUNT CEILING LIGHT
- WALL MOUNT LIGHT
- EYEBALL SPOT RECESSED LIGHT
- TRACK LIGHTING
- 1x4 FLUORESCENT LIGHT 2 LAMP
- 2x4 FLUORESCENT LIGHT 4 LAMP
- PC PORCELAIN LIGHT FIXT. WITH PULL CHORD
- MS MOTION SENSOR
- FLOOD LIGHT
- DISCONNECT
- $ SINGLE POLE SWITCH
- $3 THREE WAY SWITCH
- $4 FOUR WAY SWITCH
- $D DIMMER SWITCH
- $3D THREE WAY DIMMER SWITCH
- $T TIMER SWITCH
- PUSH BUTTON
- ROPE LIGHTS
- WALL SCONCE
- UNDER UPPER CABINET FLUOR. STRIP LIGHT
- SMOKE & C.O. DETECTOR AC/DC HARD-WIRED AND INTERCONNECTED W/ BATTERY BACKUP
- V HI-VOLUME VENT FAN TO EXTERIOR
- CEILING FAN
- CEILING FAN WITH LIGHT
- 11Ø v FLOOR OUTLET
- 11Ø v AT CEILING
- 11Ø v OUTLET
- 11Ø v QUAD OUTLET
- 22Ø v OUTLET (220V)
- 11Ø v WATERPROOF G.F.I. OUTLET (WP)
- 11Ø v GROUND FAULT INTERRUPTER OUTLET (GFI)
- HL HEAT LAMP
- VT VENT / LIGHT
- TV TELEVISION ANTENNA
- TELEPHONE OUTLET
- FLOOR TELEPHONE OUTLET
- DATA PORT
- INTERNET NETWORK
- J JUNCTION BOX
- T THERMOSTAT
- CHIME CHIMES
- AKP ALARM KEY PAD
- ANB ALARM NOISE BOX
- AUDIO/VISUAL ALARM

R317.1 When more than one smoke alarm is required to be installed within an individual dwelling unit the alarm devices shall be interconnected in such a manner that the actuation of one alarm will activate all the alarms in the individual unit. The alarm shall be clearly audible in all bedrooms over background noise levels with all intervening doors closed. R311.2 Power Source. In new Construction , the required smoke alarms shall receive their primary power from the building wiring when such wiring is served from a commercial source, and when primary power is interrupted, shall receive power from a battery. Wiring shall be permanent and without a disconnecting switch other than those required for over current protection. Smoke Alarms shall be permitted to be battery operated when installed in buildings without commercial power or in buildings that undergo alterations, repairs or additions regulated by section R311.1.1

PURSER ARCHITECTURAL INC.
14700 MEMORIAL DRIVE SUITE 215
HOUSTON, TEXAS 77079
TEL: 281 · 293 · 9291
FAX: 281 · 293 · 7246
E-MAIL: PURSERA@GMAIL.COM
WWW.DONPURSER.COM

OFFICE

720 W. ALABAMA
HOUSTON, TX 77006

DATE OF ISSUE

FIRST DRAFT	08/05/2016

REGISTERED ARCHITECT · DONALD G. PURSER · 8689 · STATE OF TEXAS

These drawings and specifications are copyrighted: they are and shall remain the sole property of Purser Architectural, Inc. ("Architect") unless otherwise noted. These drawings are not to be used on other projects or extensions to this project except by agreement with appropriate compensation to Architect. Contractor is responsible for confirming and correlating dimensions at job site. Architect will not be responsible for construction means, methods, techniques or procedures or for safety precautions and programs in connection with this project. Reproduction of these drawings is prohibited without permission from architect. These drawings are not valid for construction purposes with out seal and signature from licensed architect.

PLAN NUMBER

2219

DATE: 08/05/2016

SHEET NUMBER:

A5.1

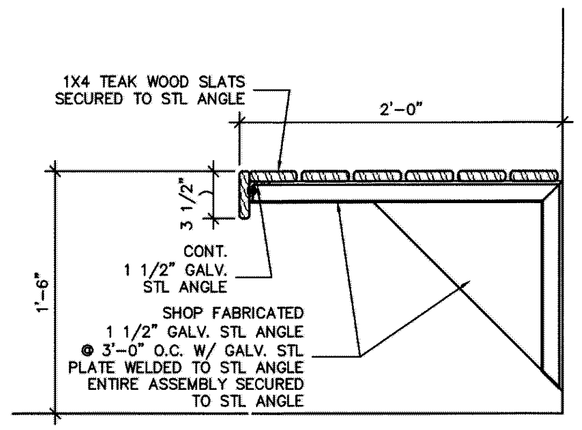

11 SECTION DETAILS
1 1/2" = 1'-0"

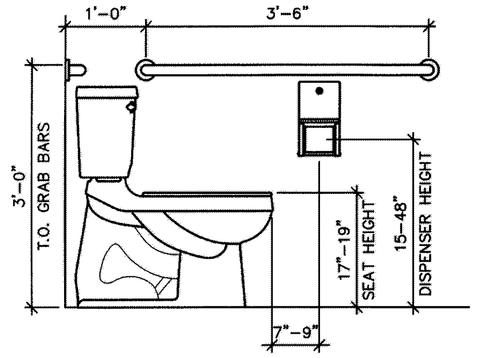

08 SECTION DETAILS
3/4" = 1'-0"

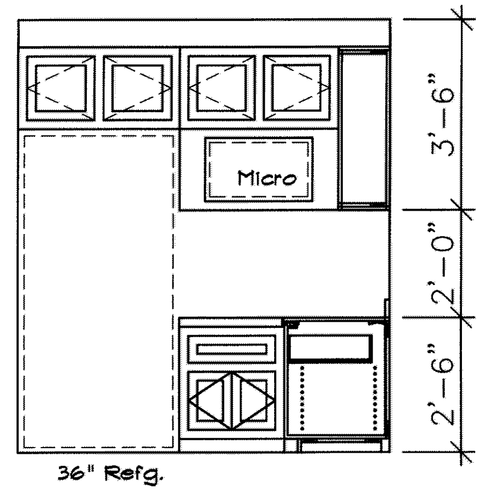

04 INTERIOR ELEVATION
1/2" = 1'-0"

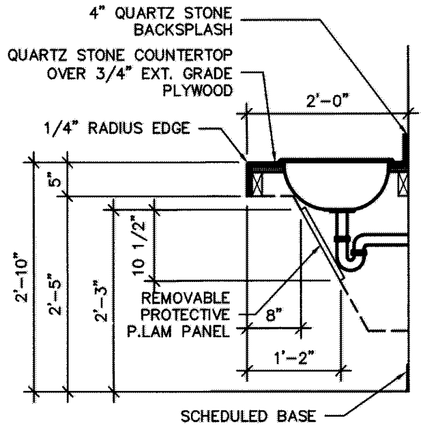

10 SECTION DETAILS
3/4" = 1'-0"

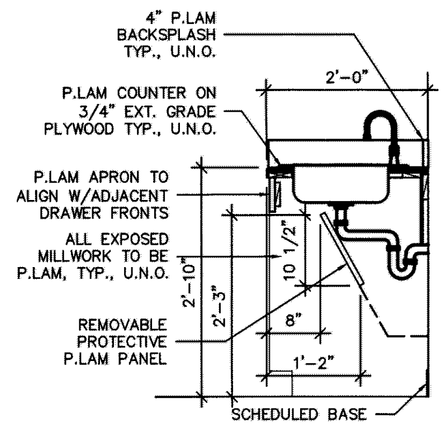

07 SECTION DETAILS
3/4" = 1'-0"

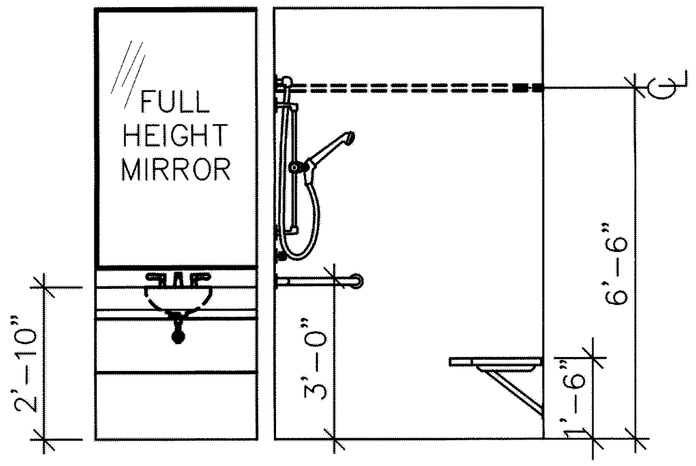

03 INTERIOR ELEVATION
1/2" = 1'-0"

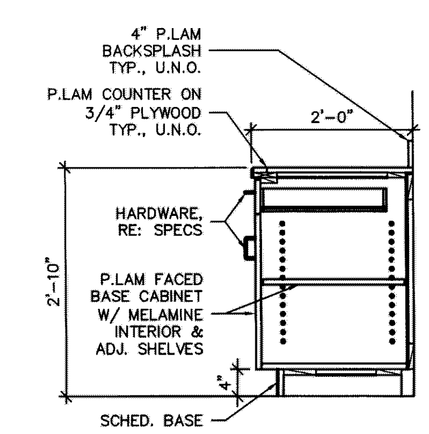

06 SECTION DETAILS
3/4" = 1'-0"

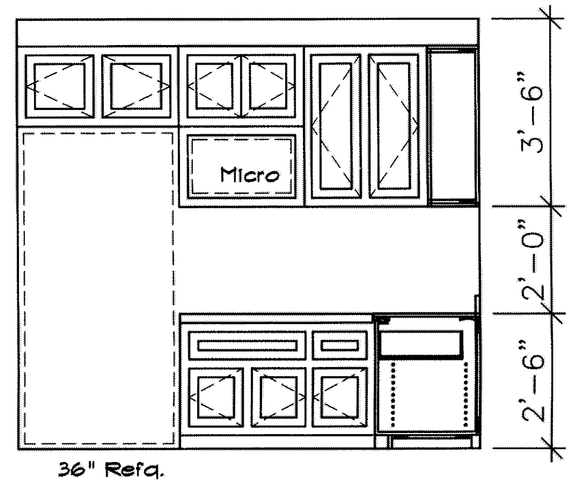

02 INTERIOR ELEVATION
1/2" = 1'-0"

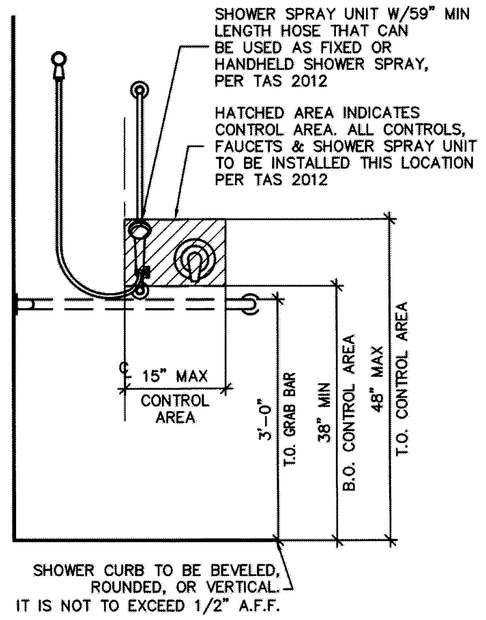

09 SECTION DETAILS
3/4" = 1'-0"

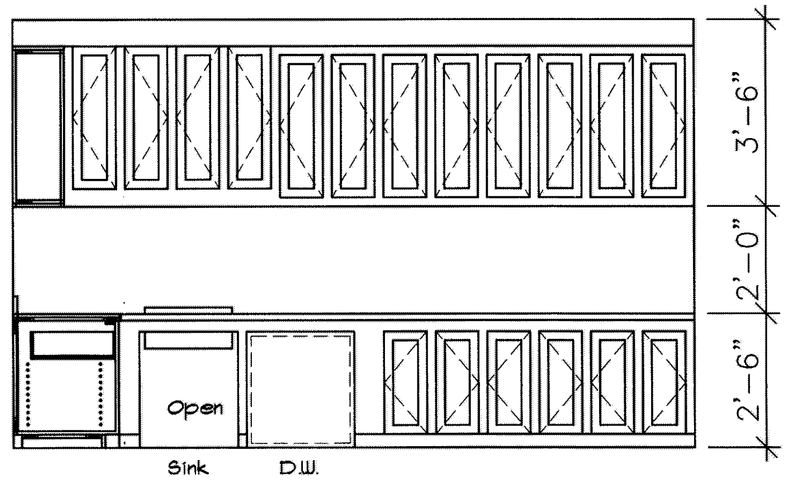

05 INTERIOR ELEVATION
1/2" = 1'-0"

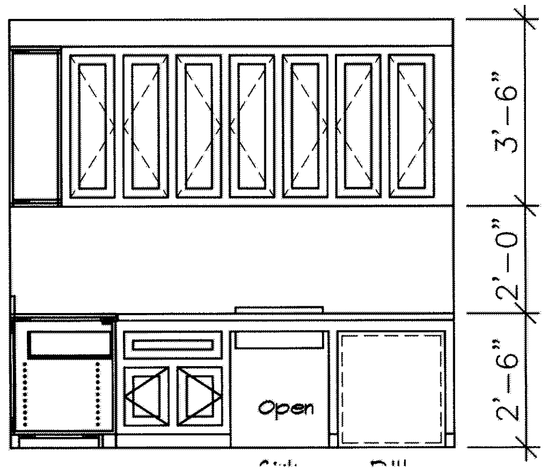

01 INTERIOR ELEVATION
1/2" = 1'-0"

PURSER ARCHITECTURAL INC.
14780 MEMORIAL DRIVE SUITE 215
HOUSTON, TEXAS 77079
TEL: 281 · 293 · 9291
FAX: 281 · 293 · 7246
E-MAIL: PURSERAI@GMAIL.COM
WWW.DONPURSER.COM

OFFICE

720 W. ALABAMA
HOUSTON, TX 77006

DATE OF ISSUE

FIRST DRAFT	08/05/2016

REGISTERED ARCHITECT
DONALD G. PURSER
9889
STATE OF TEXAS

These drawings and specifications are copyrighted: they are and shall remain the sole property of Purser Architectural, Inc. ("Architect") unless otherwise noted. These drawings are not to be used on other projects or extensions to this project except by agreement with appropriate compensation to Architect. Contractor is responsible for confirming and correlating dimensions at job site. Architect will not be responsible for construction means, methods, techniques or procedures or for safety precautions and programs in connection with this project. Reproduction of these drawings is prohibited without permission from architect. These drawings are not valid for construction purposes with out seal and signature from licensed architect.

PLAN NUMBER
2219

DATE: 08/05/2016

SHEET NUMBER:
A6.0

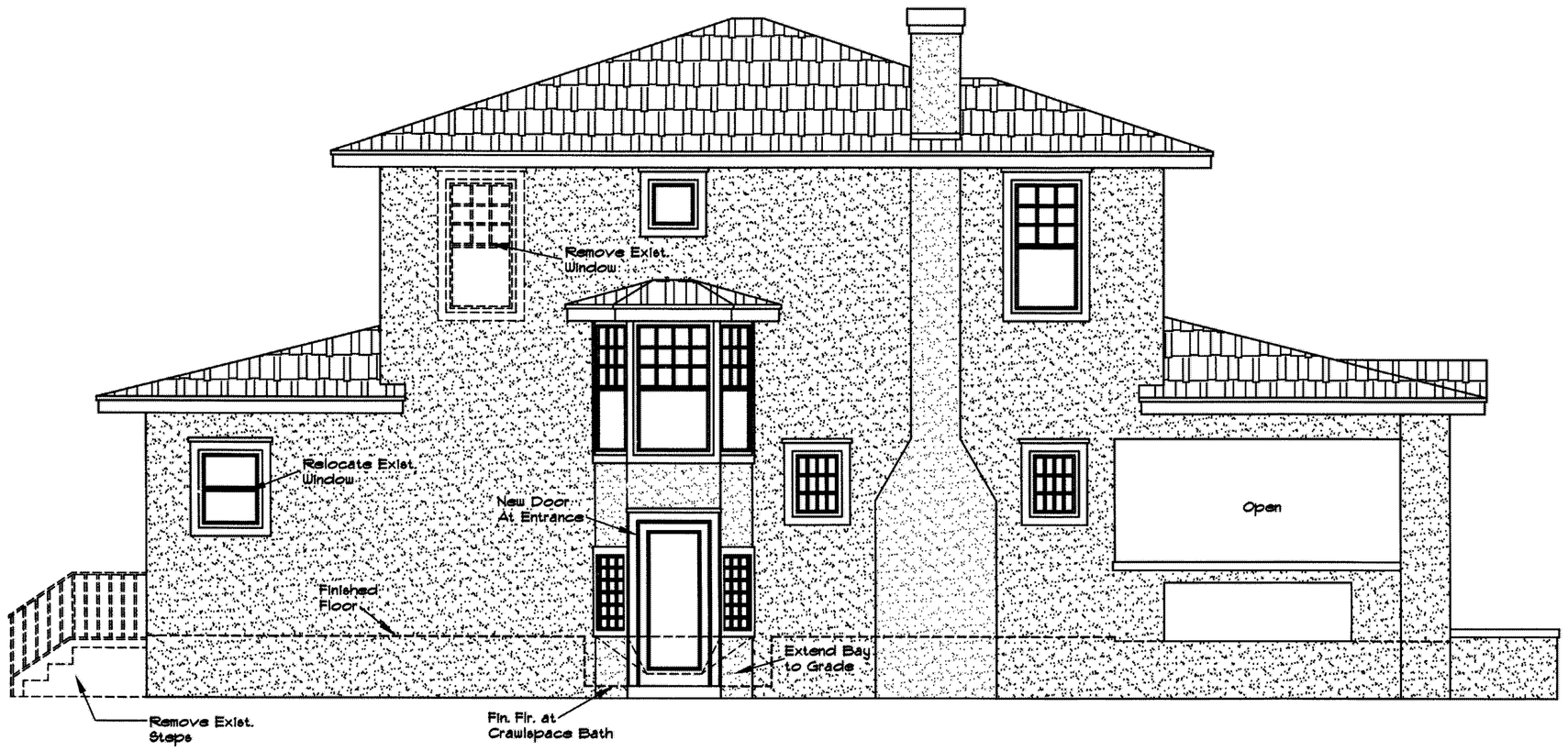

Ø4 EXISTING LEFT SIDE
1/4" = 1'-Ø"

Ø2 EXISTING FRONT ELEVATION
1/4" = 1'-Ø"

Ø3 EXISTING REAR ELEVATION
1/4" = 1'-Ø"

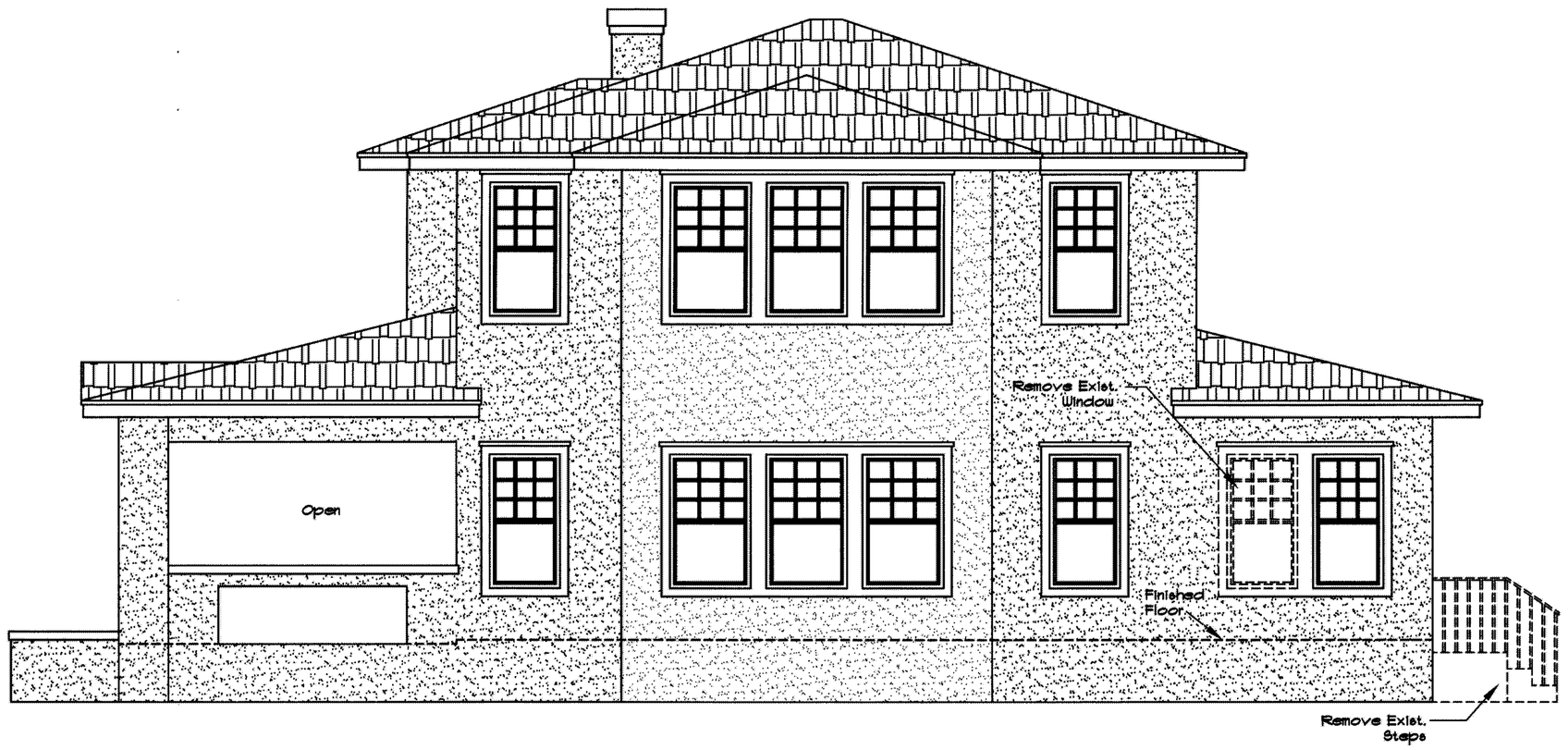

Ø1 EXISTING RIGHT SIDE
1/4" = 1'-Ø"

PURSER ARCHITECTURAL INC.
14780 MEMORIAL DRIVE SUITE 215
HOUSTON, TEXAS 77079
TEL: 281 · 293 · 9291
FAX: 281 · 293 · 7246
E-MAIL: PURSERA1@GMAIL.COM
WWW.DONPURSER.COM

OFFICE
720 W. ALABAMA
HOUSTON, TX 77006

DATE OF ISSUE

FIRST DRAFT	08.05.2016

REGISTERED ARCHITECT DONALD G. PURSER 8689 STATE OF TEXAS

These drawings and specifications are copyrighted: they are and shall remain the sole property of Purser Architectural, Inc. ("Architect") unless otherwise noted. These drawings are not to be used on other projects or extensions to this project except by agreement with appropriate compensation to Architect. Contractor is responsible for confirming and correlating dimensions at job site. Architect will not be responsible for construction means, methods, techniques or procedures or for safety precautions and programs in connection with this project. Reproduction of these drawings is prohibited without permission from architect. These drawings are not valid for construction purposes with out seal and signature from licensed architect.

PLAN NUMBER
2219

DATE: 08/05/2016

SHEET NUMBER:
A7.0

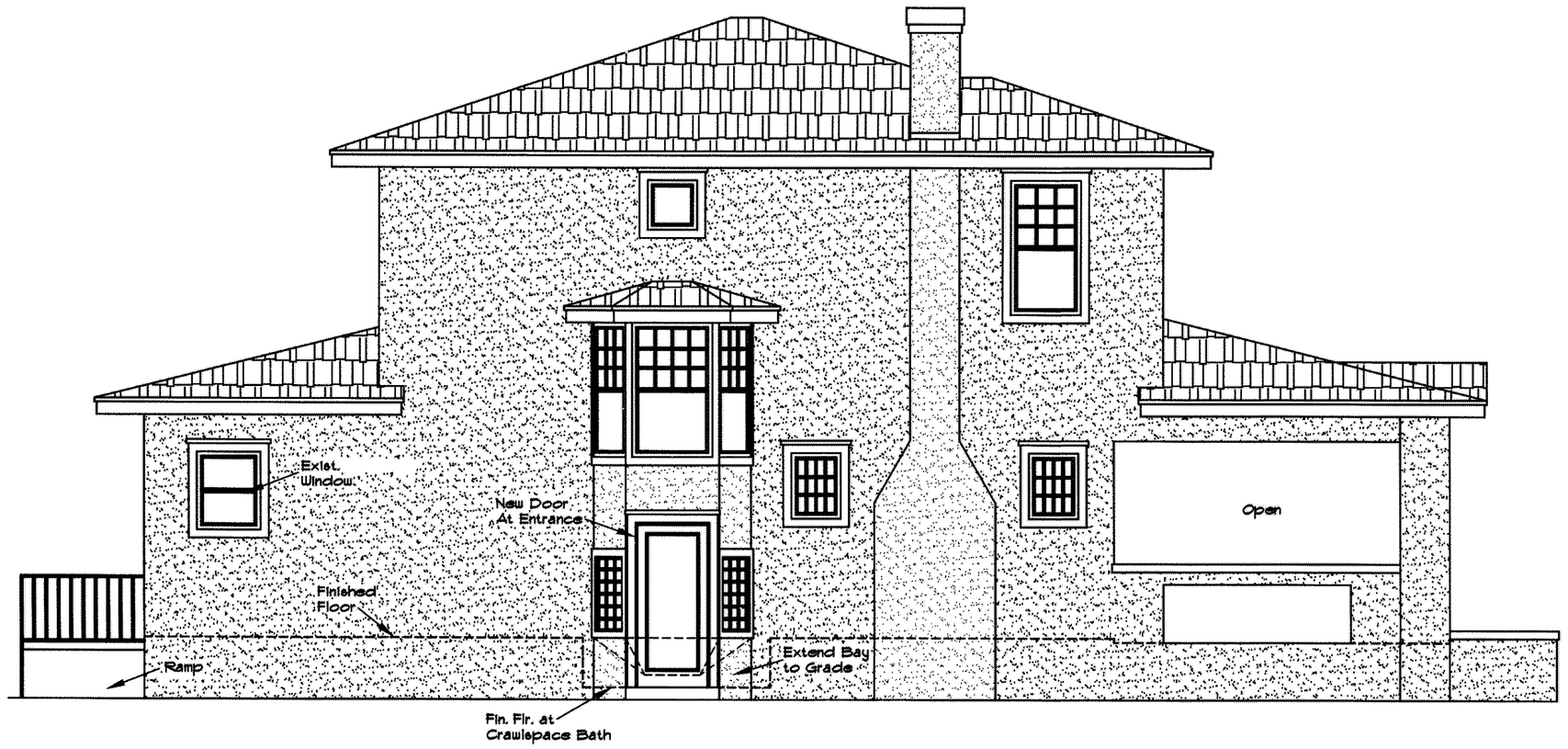

Ø4 EXISTING LEFT SIDE
1/4" = 1'-0"

Ø2 EXISTING FRONT ELEVATION
1/4" = 1'-0"

Ø3 EXISTING REAR ELEVATION
1/4" = 1'-0"

Ø1 EXISTING RIGHT SIDE
1/4" = 1'-0"

PAI

PURSER ARCHITECTURAL INC.
14780 MEMORIAL DRIVE SUITE 215
HOUSTON, TEXAS 77079
TEL: 281 · 293 · 9291
FAX: 281 · 293 · 7246
E-MAIL: PURSERA@GMAIL.COM
WWW.DONPURSER.COM

OFFICE

720 W. ALABAMA
HOUSTON, TX 77006

DATE OF ISSUE

FIRST DRAFT	08.05.2016

REGISTERED ARCHITECT DONALD G. PURSER 9689 STATE OF TEXAS

08.08.16

These drawings and specifications are copyrighted: they are and shall remain the sole property of Purser Architectural, Inc. ("Architect") unless otherwise noted. These drawings are not to be used on other projects or extensions to this project except by agreement with appropriate compensation to Architect. Contractor is responsible for confirming and correlating dimensions at job site. Architect will not be responsible for construction means, methods, techniques or procedures or for safety precautions and programs in connection with this project. Reproduction of these drawings is prohibited without permission from Architect. These drawings are not valid for construction purposes with out seal and signature from licensed architect.

PLAN NUMBER

2219

DATE: 08/05/2016

SHEET NUMBER:

A8.0