Houston Archaeological & Historical Commission **ITEM B.5**

January 29, 2015 909 Texas Avenue

HPO File No. 150109 Main Street Market Square

Landmark: Rice Hotel

CERTIFICATE OF APPROPRIATENESS

Application Date: January 7, 2015

Applicant: Joseph Smith, Greystar for Joe Arentz, CH Realty/MF Houston Rice VI LP, owner

Property: 909 Texas Avenue, Lots 1, 2, 6 through 10 & 12 and Tracts 3A & 11A, Block 57, SSBB Subdivision. The property includes a historic, brick, 518,000 square foot 18-story former hotel building situated on a 45,000 square foot corner lot.

Significance: Contributing 18-story former hotel building, constructed circa 1913-1925, located in the Main Street Market Square Historic District. The Rice Hotel is also a City of Houston Landmark.

Proposal: Alteration – Resubmittal: At the December 2014 HAHC meeting, the applicant was granted partial approval of a COA: approval of window alterations; denial of alterations to Texas Street entry including:

- A new pair of frameless glass entry doors with side lites will be installed in the existing door opening
- The existing marble entry surround will be removed and replaced with a larger surround that also covers existing painted concrete

The applicant now proposes to replace the existing non-original front doors of the Texas Street entry with frameless glass doors.

See enclosed application materials and detailed project description on p. 4-9 for further details.

Public Comment: No public comment received.

Civic Association: No comment received.

Recommendation: **Approval**

HAHC Action: **Approved**

All materials in exterior walls, including windows, siding, framing lumber, and interior shiplap must be retained except where removal or replacement has been explicitly approved by HAHC. Shiplap is an integral structural component of the exterior wall assembly in balloon framed structures and its removal can cause torqueing, twisting and collapse of exterior walls. Shiplap may be carefully shored and removed in small portions to insulate, run wire or plumbing, and should be replaced when the work is complete. Maintenance and minor in-kind repairs of exterior materials may be undertaken without HAHC approval, but if extensive damage of any exterior wall element is encountered during construction, contact staff before removing or replacing the materials. A revised COA may be required.

CERTIFICATE OF APPROPRIATENESS

Basis for Issuance: HAHC Approval
Effective: January 29, 2015

PLANNING & DEVELOPMENT DEPARTMENT

COA valid for one year from effective date. COA is in addition to any other permits or approvals required by municipal, state and federal law. Permit plans must be stamped by Planning & Development Department for COA compliance prior to submitting for building or sign permits. Any revisions to the approved project scope may require a new COA.

Planning Official **Date**

APPROVAL CRITERIA

ALTERATIONS, REHABILITATIONS, RESTORATIONS AND ADDITIONS

Sec. 33-241(a): HAHC shall issue a certificate of appropriateness for the alteration, rehabilitation, restoration or addition of an exterior feature of (i) any landmark or protected landmark, (ii) any building, structure or object that is contributing to an historic district, or (iii) any building, structure or object that is part of an archaeological site, upon finding that the application satisfies the following criteria, as applicable:

S - satisfies D - does not satisfy NA - not applicable

S	D	NA		
☒	☐	☐	(1)	The proposed activity must retain and preserve the historical character of the property;
☒	☐	☐	(2)	The proposed activity must contribute to the continued availability of the property for a contemporary use;
☒	☐	☐	(3)	The proposed activity must recognize the building, structure, object or site as a product of its own time and avoid alterations that seek to create an earlier or later appearance;
☒	☐	☐	(4)	The proposed activity must preserve the distinguishing qualities or character of the building, structure, object or site and its environment;
☒	☐	☐	(5)	The proposed activity must maintain or replicate distinctive stylistic exterior features or examples of skilled craftsmanship that characterize the building, structure, object or site;
☒	☐	☐	(6)	New materials to be used for any exterior feature excluding what is visible from public alleys must be visually compatible with, but not necessarily the same as, the materials being replaced in form, design, texture, dimension and scale;
☐	☐	☒	(7)	The proposed replacement of missing exterior features, if any, should be based on an accurate duplication of features, substantiated by available historical, physical or pictorial evidence, where that evidence is available, rather than on conjectural designs or the availability of different architectural elements from other structures;
☒	☐	☐	(8)	Proposed additions or alterations must be done in a manner that, if removed in the future, would leave unimpaired the essential form and integrity of the building, structure, object or site;
☒	☐	☐	(9)	The proposed design for any exterior alterations or addition must not destroy significant historical, architectural or cultural material and must be compatible with the size, scale, material and character of the property and the area in which it is located;
☐	☐	☒	(10)	The setback of any proposed construction or alteration must be compatible with existing setbacks along the blockface and facing blockface(s);
☐	☐	☒	(11)	The proposed activity will comply with any applicable deed restrictions.

N

PROPERTY LOCATION

MAIN STREET MARKET SQUARE HISTORIC DISTRICT

Building Classification
- Contributing
- Non-Contributing
- Park

CURRENT PHOTO

3D RENDERING – FRONT FACING TEXAS STREET

DENIED – 1/17/15

PROPOSED

SOUTH ELEVATION – FRONT FACING TEXAS STREET

EXISTING

DENIED – 12/23/14

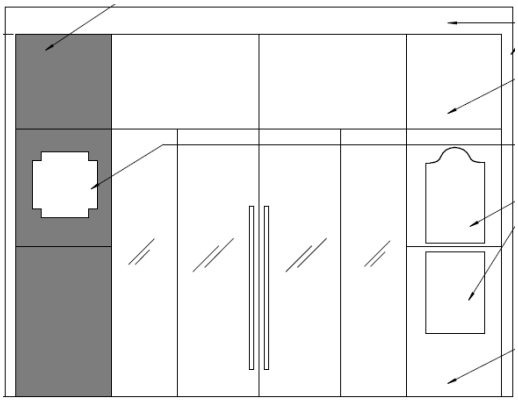

PROPOSED

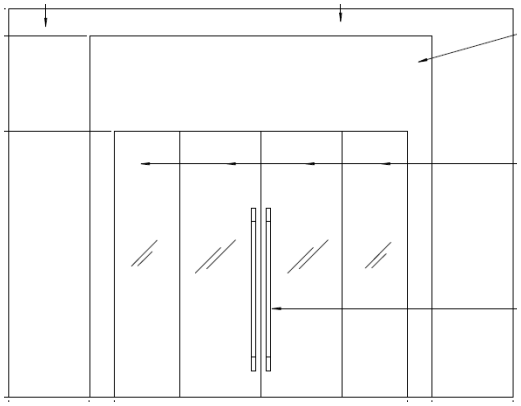

SITE PLAN

EXISTING

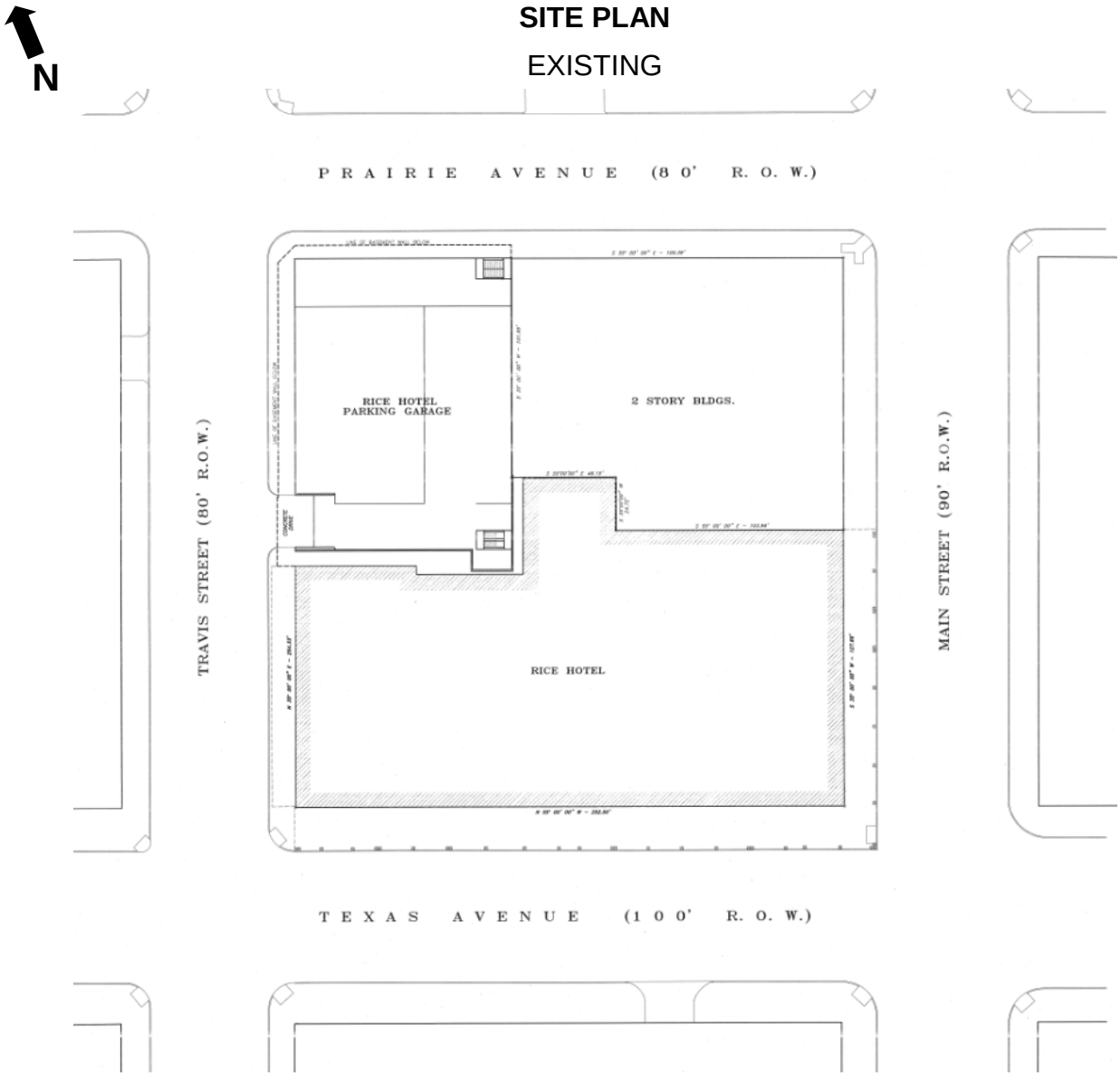

N

FIRST FLOOR PLAN

EXISTING

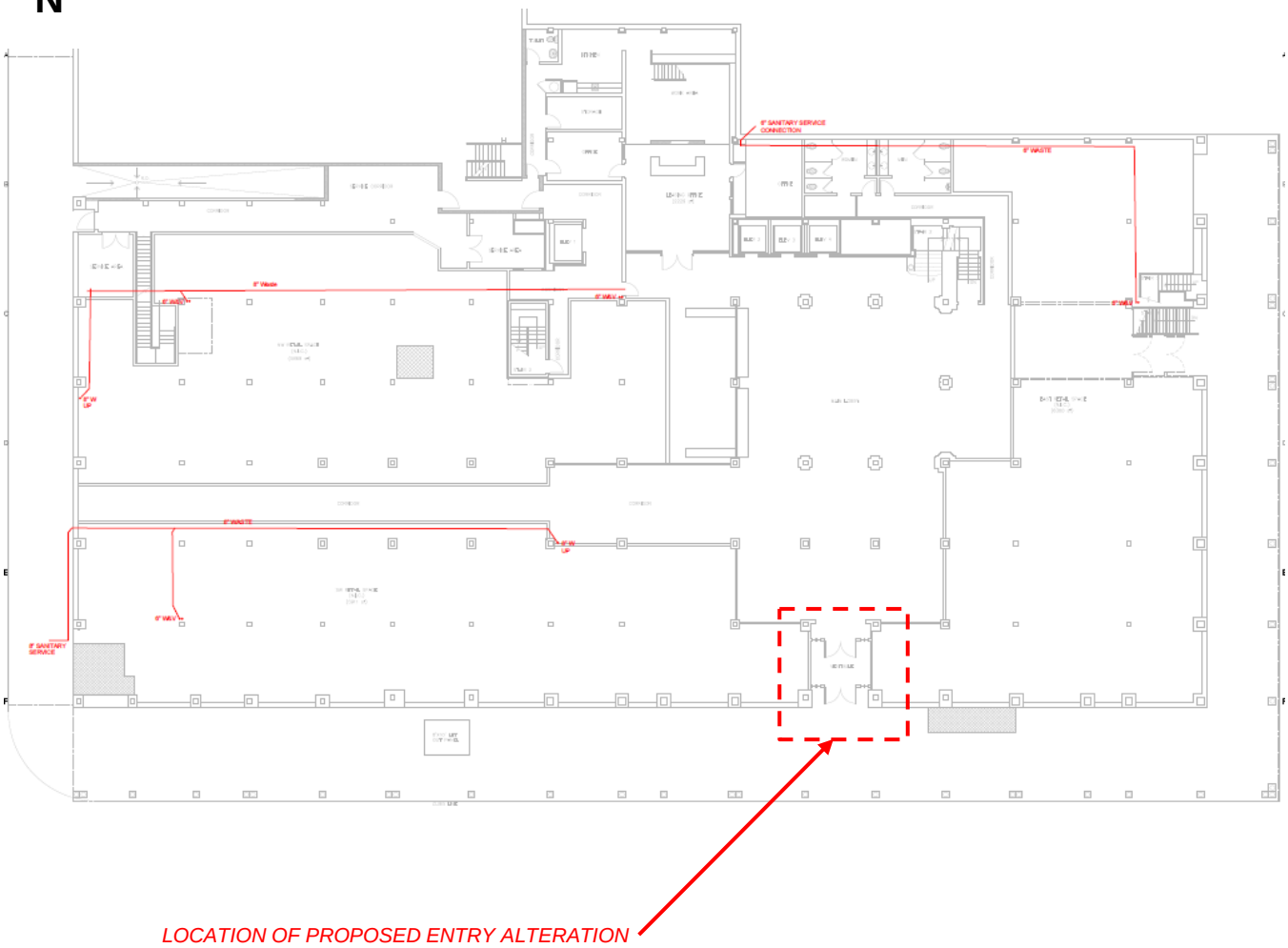

PROJECT DETAILS

Windows/Doors: The existing main entry on Texas Street features two non-original pairs of wood and glass doors with transoms to be removed and replaced with a pair of frameless glass doors with frameless side lites in the same 10'-10" wide by 9'-11" opening.

Exterior Materials: The existing Texas Street entry features a marble surround and painted stone to be retained. Two historic plaques will be retained in their existing location.

Front Elevation: (South) Existing wood entry doors and transoms will be removed and replaced with frameless glass doors with side lites.