CERTIFICATE OF APPROPRIATENESS

Application Date: December 2, 2014

Applicant: Sam Gianukos, Creole Design, LLC, for Bill Baldwin, owner

Property: 3215 Morrison Street, Lot 1 & N 12.5 ft of Lot 2, Block 1, Manors at Woodland Heights Subdivision. The property is an 8,580 square foot (66' x 130') interior lot.

Significance: The property is a vacant lot located in the Woodland Heights Historic District.

Proposal: New Construction –

At the November 2014 HAHC meeting, the applicant was denied a COA for a new single-family residence. The applicant is reapplying for a COA for a revised design.

In the November proposal, the 5,180 square foot hybrid 1½ story/two-story residence with side attached garage measured 59'-5" wide and 84' deep, with an eave height of 15'-6" in front and 22'-10" at the rear, and ridge height of 38'-5".

The revised proposal is for a 5,184 square foot hybrid 1½ story/two-story residence with side attached garage, with the following proportions:

- Residence measures 59'-5" wide and 82' deep,
- Eave height is 14'-6" in the front and 21'-11" at the rear.
- Ridge height is 33'-6"
- Residence will be clad with cementitious horizontal lap siding and will feature 1-over-1 wood sash windows and 10" round fiberglass columns.
- Setbacks are 25'-6" from the front property line for main body of the house and 65'-4" for front of attached side garage, 3'-6" from the north side; 3'-1" from south side.
- Foundation has been changed from pier and beam to slab.

The new proposal has a similar footprint to the denied project, but the floor plan and garage placement have been flipped.

See enclosed application materials and detailed project description on p. 10-25 for further details.

Public Comment: No public comment received at this time.

Civic Association: No comment received.

Recommendation: **Denial - does not satisfy criteria 1, 2, 3, and 4.**

HAHC Action: **Denied**

APPROVAL CRITERIA

NEW CONSTRUCTION IN A HISTORIC DISTRICT

Sec. 33-242: HAHC shall issue a certificate of appropriateness for new construction in a historic district upon finding that the application satisfies the following criteria:

S D NA **S - satisfies D - does not satisfy NA - not applicable**

☐ ☒ ☐ (1) The new construction must match the typical setbacks of existing contributing structures in the historic district

The typical setback for contributing structures on this blockface is 21'-26'. The front setback of the proposed house matches typical. However, the proposed garage is setback only 65'-4" from the front property line. The typical location of garages found in the district is at the rear of the property. This lot is 130' deep, so the garage should more appropriately be located approximately 100' from front property line. Furthermore, side setbacks on both north and south sides are only 3', which is atypical for the district.

The applicant has stated that the inappropriate garage placement is being forced by the presence of a tree at the rear southwest corner of the lot (see photo p. 8). The lot is 8580 square feet (66' wide by 130' deep) and has no other encumbrances. Staff believes a house can easily be designed for the site that meets all requirements for this historic district, including that of placing garages at the rear of the lot.

☐ ☒ ☐ (2) The exterior features of new construction must be compatible with the exterior features of existing contributing structures in the historic district

The house features an attached side garage located only 65'-4" from the front property line on a lot that is 130' deep. Attached side garages are not a feature found in Woodland Heights Historic District. Historically, garages are detached and located at the rear of the property. See Criterion 1 for more information.

Also, the combination 1½ / two-story hybrid roof form is not a compatible feature of contributing historic structures found in the district.

☐ ☒ ☐ (3) The proportions of the new construction, including width and roofline, must be compatible with the typical proportions of existing contributing structures and objects in the historic district

The house is two stories but is designed to appear as a 1½ story house from the front elevation. A typical 1½ story house in Woodland Heights Historic District has an eave height in the low teens and ridge height in the mid-20s. Next door at 3301 Morrison is a contributing 1 ½ story house; this house has a ridge height of 25' and an eave height of 9'-7". See p. 11 for comparison sketch of proposed new house adjacent to neighboring 1½ story contributing house.

The roof line of the proposed residence measures 33'-6" high, which is incompatible with the typical ridge height found in the district for both 1½ and two-story residences. The typical roof line for a 1½ story residence in the district is in the mid-20s and not more than 27', and the typical roof line for two story residence is between 30' to 32'. The 1½ story contributing house at 3301 Morrison next door has a ridge height of 25', 8' less than that proposed for the new house at 3215 Morrison.

The proposed house is two full stories but styled to have the appearance of a 1½ story residence at the front. The roof shape and proportions are a hybrid of 1½-story and 2-story residential roof forms, which is found nowhere in Woodland Heights Historic District. The combination of the 1½ / two-story roof form create an architectural feature that is not present on historic structures in the district and features proportions that are not compatible with one and two-story contributing residences. The proportions of true historic 1½-story homes reflect those of 1-story homes, as 1½ -story homes maintain the shape and form of a 1-story with space under the roofline utilized as a second level. The proportions that define a 1½ -story house are being mixed with the proportions

that define a 2-story house, resulting in a composite of proportions not typical to the contributing historic homes.

Furthermore, the front porch eave has a height of 14'-6", which is several feet higher than what is appropriate for a porch eave in the historic district. The adjacent contributing 1½ story house at 3301 Morrison features a porch eave height of 9'-7". The applicant's proposed front porch eave height of 14'-6" is 6' taller than that of the adjacent historic house.

Including the attached garage, the width of the proposed house is 59'-5, significantly greater than typical width of contributing houses, which generally ranges from 25' to 35' in the district.

Revising the design to be compatible with typical proportions of a 1½ -story OR to have typical proportions of a 2-story house would be more appropriate. The design currently has more features typical to a 2-story house; revising the front portion of the house to appear to be 2-stories instead of 1½ stories may be an option.

☐ ☒ ☐ (4) The height of the eaves of a new construction intended for use for residential purposes must not be taller than the typical height of the eaves of existing contributing structures used for residential purposes in the historic district; and

The proposed 1½ story residence has a front eave height of 14'-6" and a rear eave height of 21'-11". The typical eave height for a 1½ story residence in the district is in the low teens and no more than 14'.

For comparison, a contributing 1½ story house is located on the adjacent property at 3301 Morrison. This house has an eave height of 9'-7" and ridge height of 25'.

☐ ☐ ☒ (5) The height of new construction intended for use for commercial purposes must not be taller than the typical height of the existing structures used for commercial purposes in the historic district.

TIMELINE

8.5.2014: Staff met with the prospective owner, Bradley Smith, who presented a site survey and a sketch of proposed house. Staff provided him with the criteria for new construction and the Woodland Heights Web Manual, as well as the following information and feedback on the proposed design.

- Two-story residence
  - 35' Width
  - 30'-32' Ridge Height
  - Full width or partial width front porch
  - 2' to 30" foundation
  - Porch eave height 10'-12'
  - Garage located at the rear
  - Wood lattice skirting
- Incompatible features
  - Flared brick steps
  - Brick foundation skirting
  - Fan lite over door

8.26.2014: Mr. Smith submitted another sketch of proposed residence to staff. Staff's feedback on 8.27.14:

- Side attached garage, brick foundation skirting, flared brick steps, masonry arches all incompatible elements for this historic district. Staff recommended that front porch elements be simplified.

9.23.2014: Staff met with Mr. and Mrs. Smith and Mr. Gianukos to discuss proposed new hybrid 1½ / 2-story residence. They provided front and side elevations and floor plans showing ridge height of 38'-5", attached side garage with 47'-4" front setback, and 6/6 sash windows in dormers.

Staff provided following feedback:

- Two-story residence: ridge height should not exceed 30'-32' or eave height of more than 23'
- 1½ story residence: ridge height should not exceed 27'-28' or eave height of more than 14'.
- If proposing a 1½ story residence, the proportions should match the proportions of a true 1½ story residence. Same for a 2-story residence.
- Garage would need to be located at rear of lot and be detached or have appearance of being detached from street, as per typical in the district and stated in Woodland Heights Historic District profile.
- 6/6 sash windows should be simplified to 1/1 and shutters removed, all not typical elements of contributing structures in Woodland Heights.
- Columns on porch should be no more than 10" in diameter; 12" diameter is not typical of the district

10.2.2014: Staff met with Mr. and Mrs. Smith and Mr. Gianukos to discuss submission for October 23, 2014 HAHC meeting. They provided revised plan for 1½ story residence with 33'-34' ridge height.

- Staff again discussed with the applicant that a 33'-34' ridge height on a 1½ story residence was not typical; max ridge height should be in high 20s.
- Trying to mask a 2-story residence as a 1½ story residence is forcing the higher ridge height. Staff recommended constructing a 2-story residence with a typical two-story façade if two full stories are desired.
- Staff again recommended that the attached side garage be detached and relocated to the rear of the lot
- Applicant stated that they had data supporting higher ridge heights for 1 ½ story residences and would provide the information with the application (information has not been submitted by applicant).

10.29.2014: Applicants submitted application for a hybrid 1½ / 2-story residence with a 38'-5" ridge height and attached side garage on north side. Project was denied at the Nov 20, 2014 HAHC meeting.

12.02.2014: Applicants resubmitted application for a hybrid 1½ / 2-story residence with a 33'-6" ridge height and attached side garage on south side.

12.15.2014: Prospective property owner asked for feedback on how project could get staff approval. Staff's feedback was as follows:

- If proposing a house with appearance of 1½ story residence, the proportions should match the proportions of a true 1½ story residence; a 33'-34' ridge height on a 1½ story residence was not typical; max ridge height should not exceed high 20s.
- If full two-story house was desired, better to design the house to look like a traditional 2-story residence found in Woodland Heights.
- Garage would need to be located at rear of lot and be detached or have appearance of being detached from street, as per typical in the district and stated in Woodland Heights Historic District profile.

TYPICAL DETAILS & PROPOSED RESIDENCE

CONTRIBUTING 1 ½ -STORY RESIDENCES IN DISTRICT

MAX WIDTH		
3215	**Morrison**	**59**
304	Bayland	52
605	Omar	44
3301	Morrison	44
3015	Morrison	37
3309	Morrison	33
3302	Beauchamp	32
3317	Morrison	31
3106	Beauchamp	28
3305	Morrison	27

FRONT WIDTH		
3301	Morrison	44
605	Omar	44
3215	**Morrison**	**35**
304	Bayland	34
3317	Morrison	31
3106	Beauchamp	28
3305	Morrison	27
3309	Morrison	14
3015	Morrison	-
3302	Beauchamp	-

RIDGE HT		
3215	**Morrison**	**34'**
3317	Morrison	30
3106	Beauchamp	29
3309	Morrison	27
605	Omar	27
3015	Morrison	27
3302	Beauchamp	27
3301	Morrison	25
3305	Morrison	23
304	Bayland	21

EAVE HT		
3317	Morrison	16
3215	**Morrison**	**15**
605	Omar	15
3015	Morrison	15
3309	Morrison	12
3106	Beauchamp	12
3302	Beauchamp	11
3305	Morrison	11
3301	Morrison	10
304	Bayland	10

PORCH EAVE HT		
3317	Morrison	16
3215	**Morrison**	**15**
3015	Morrison	13
605	Omar	13
3309	Morrison	12
3106	Beauchamp	12
3302	Beauchamp	11
3305	Morrison	11
3301	Morrison	10
304	Bayland	10

CONTRIBUTING 2 -STORY RESIDENCES IN DISTRICT

MAX WIDTH		
3215	**Morrison**	**59**
629	Omar	49
620	Woodland	45
312	Bayland	44
212	Bayland	39
3212	Beauchamp	38
514	Omar	37
3103	Morrison	36
3109	Morrison	36
3012	Beauchamp	35
215	Bayland	34
608	Woodland	34
3222	Morrison	33
3006	Beauchamp	31
3007	Morrison	31
3218	Beauchamp	31
208	Bayland	30
611	Omar	30
3011	Morrison	29
620	Omar	29
430	Omar	29
623	Woodland	29
3202	Morrison	28
3325	Morrison	28
629	Woodland	28
3210	Morrison	27
612	Woodland	27
719	Woodland	25
310	Bayland	24
307	Woodland	24
2915	Morrison	20
3306	Morrison	-
3102	Beauchamp	-

FRONT WIDTH		
212	Bayland	39
514	Omar	37
3103	Morrison	36
3109	Morrison	36
3215	**Morrison**	**35**
312	Bayland	34
3006	Beauchamp	31
3222	Morrison	30
208	Bayland	30
611	Omar	30
620	Omar	29
3202	Morrison	28
3325	Morrison	28
3210	Morrison	27
3306	Morrison	25
310	Bayland	24
430	Omar	21
2915	Morrison	20
307	Woodland	19
215	Bayland	16
3212	Beauchamp	15
629	Omar	14
3007	Morrison	13
3011	Morrison	12
3012	Beauchamp	9
608	Woodland	-
612	Woodland	-
620	Woodland	-
623	Woodland	-
629	Woodland	-
719	Woodland	-
3218	Beauchamp	-
3102	Beauchamp	-

RIDGE HT		
215	Bayland	44
3007	Morrison	37
3215	**Morrison**	**34**
3325	Morrison	33
629	Omar	33
611	Omar	33
719	Woodland	33
620	Omar	32
312	Bayland	32
3102	Beauchamp	32
3222	Morrison	32
3011	Morrison	32
3103	Morrison	32
612	Woodland	31
629	Woodland	31
608	Woodland	31
3306	Morrison	30
3210	Morrison	30
3006	Beauchamp	29
3109	Morrison	29
310	Bayland	29
620	Woodland	29
2915	Morrison	28
3202	Morrison	28
3212	Beauchamp	28
3012	Beauchamp	28
208	Bayland	28
307	Woodland	28
623	Woodland	27
3218	Beauchamp	27
514	Omar	26
430	Omar	25
212	Bayland	-

EAVE HT		
215	Bayland	27
3325	Morrison	26
3007	Morrison	25
629	Omar	25
611	Omar	25
612	Woodland	24
3222	Morrison	24
719	Woodland	23
3102	Beauchamp	23
608	Woodland	23
3215	**Morrison**	**22**
3011	Morrison	22
3103	Morrison	22
2915	Morrison	22
629	Woodland	22
620	Omar	22
620	Woodland	21
310	Bayland	21
307	Woodland	21
3306	Morrison	20
3210	Morrison	20
3109	Morrison	20
3202	Morrison	20
3012	Beauchamp	20
212	Bayland	20
208	Bayland	20
3212	Beauchamp	19
3006	Beauchamp	19
312	Bayland	19
623	Woodland	19
3218	Beauchamp	19
514	Omar	19
430	Omar	16

PORCH EAVE HT		
3218	Beauchamp	18
3215	**Morrison**	**15**
215	Bayland	14
3007	Morrison	13
611	Omar	13
3325	Morrison	12
3011	Morrison	12
3222	Morrison	12
629	Omar	12
3210	Morrison	11
3103	Morrison	11
3102	Beauchamp	11
307	Woodland	11
620	Omar	11
310	Bayland	11
312	Bayland	11
3006	Beauchamp	11
3306	Morrison	10
2915	Morrison	10
3202	Morrison	10
3109	Morrison	10
212	Bayland	10
3012	Beauchamp	10
514	Omar	10
430	Omar	9
208	Bayland	9
3212	Beauchamp	-
608	Woodland	-
612	Woodland	-
620	Woodland	-
629	Woodland	-
623	Woodland	-
719	Woodland	-

PROPERTY LOCATION

WOODLAND HEIGHTS HISTORIC DISTRICT

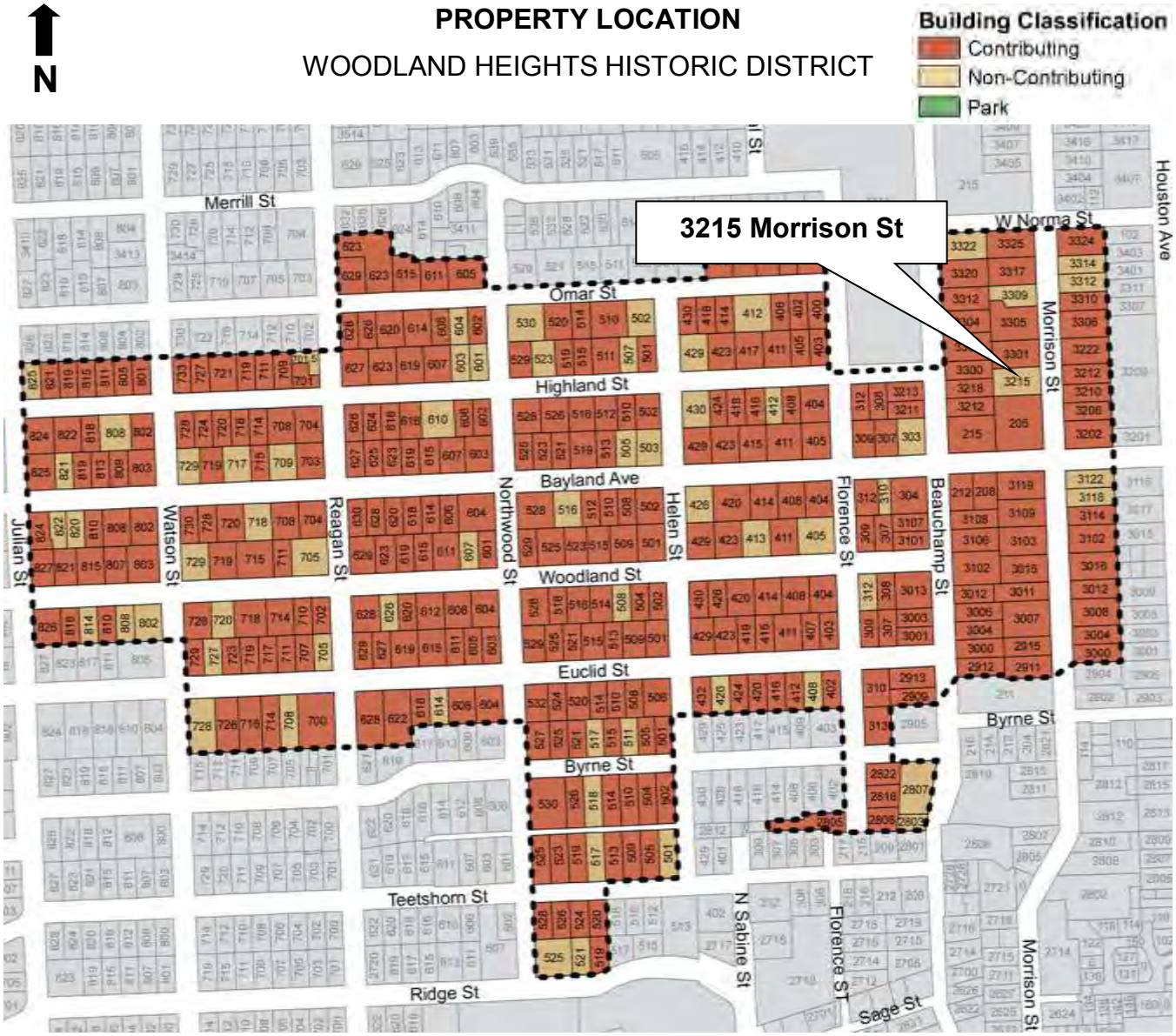

CURRENT PHOTO

NEIGHBORING PROPERTIES

205 Bayland – Contributing – 1910 (neighbor)
Facing Bayland, not Morrison

3301 Morrison – Contributing – 1910 (neighbor)

3305 Morrison– Contributing – 1912 (blockface)

3206 Morrison– Contributing – 1920 (across street)

3210 Morrison– Contributing – 1924 (across street)

3212 Morrison– Contributing – 1920 (across street)

BLOCKFACE PHOTOS

3301 Morrison

3305 Morrison **3309 Morrison**

3222 Morrison

3212 Morrison **3210 Morrison**

3215 MORRISON & 3301 MORRISON COMPARISON

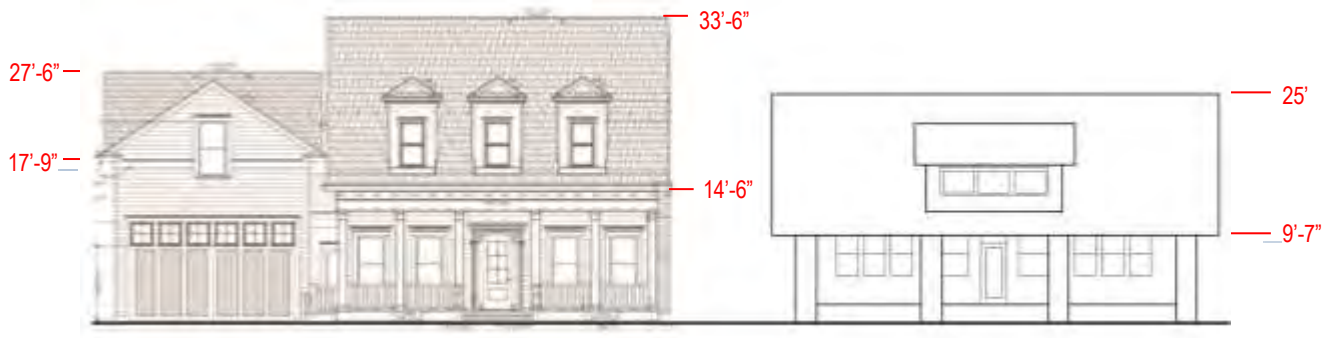

EAST ELEVATION – FRONT FACING MORRISON STREET

DENIED – 11/20/14

PROPOSED

NORTH SIDE ELEVATION

DENIED – 11/20/14

PROPOSED

SOUTH SIDE ELEVATION

DENIED – 11/20/14

PROPOSED

WEST (REAR) ELEVATION

DENIED – 11/20/14

PROPOSED

N

SITE PLAN

DENIED – 11/20/14

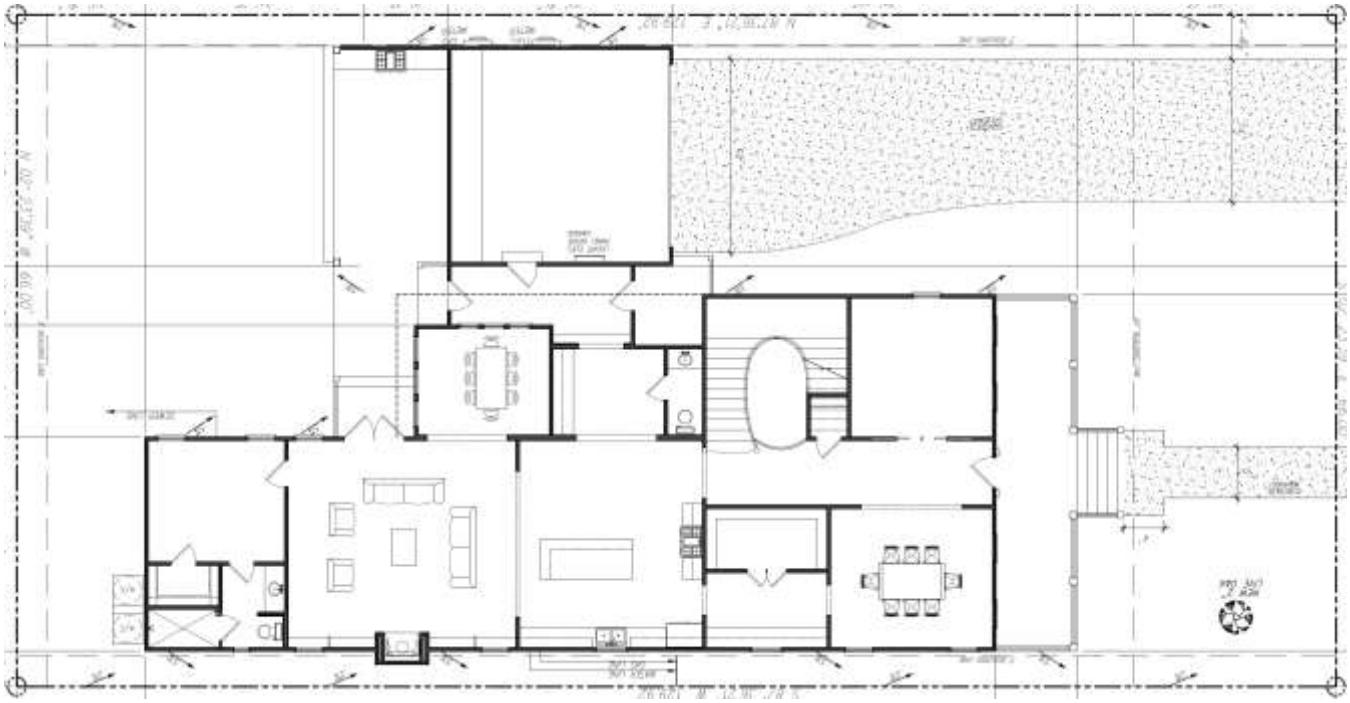

PROPOSED

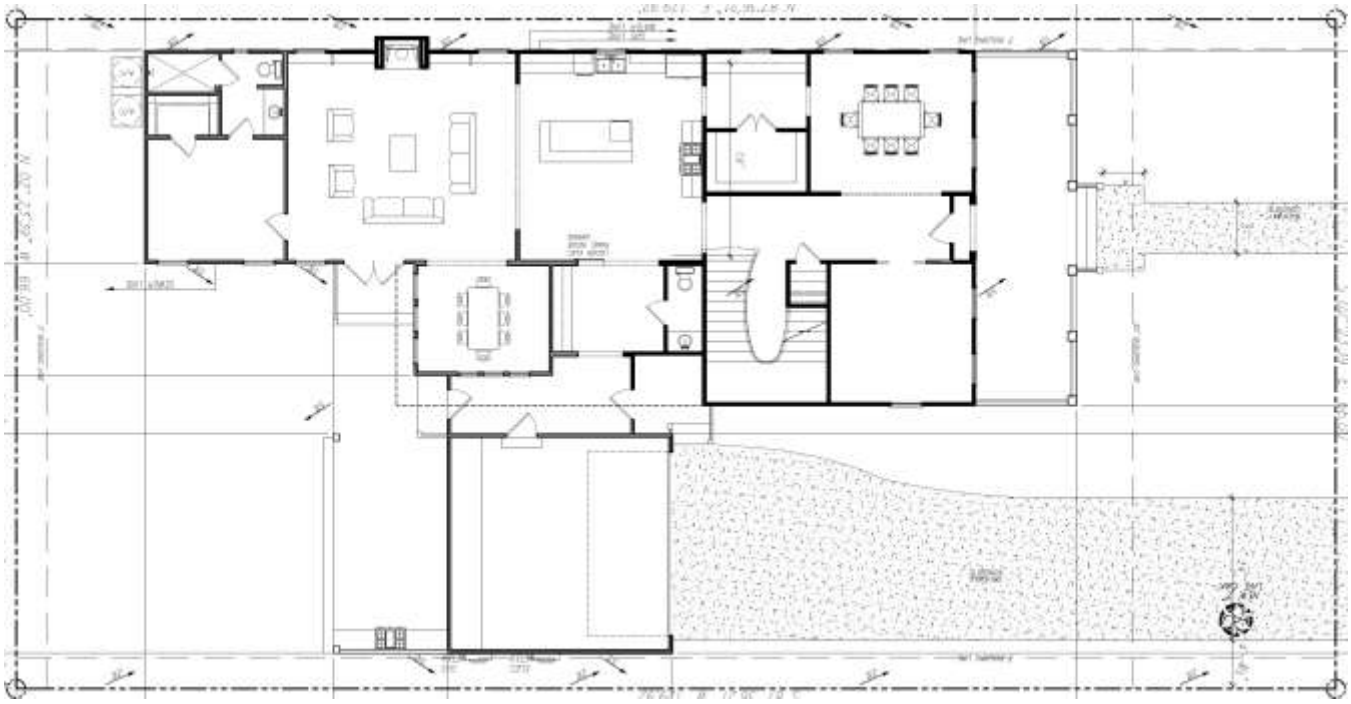

N

ROOF PLAN

DENIED – 11/20/14

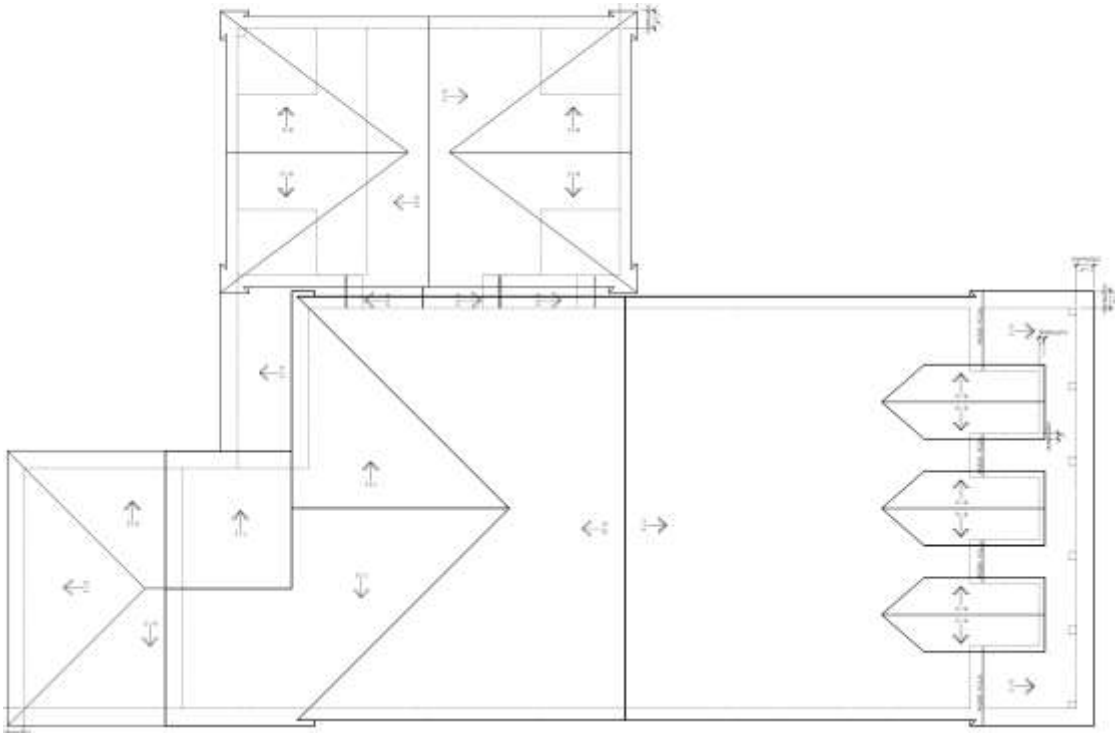

PROPOSED

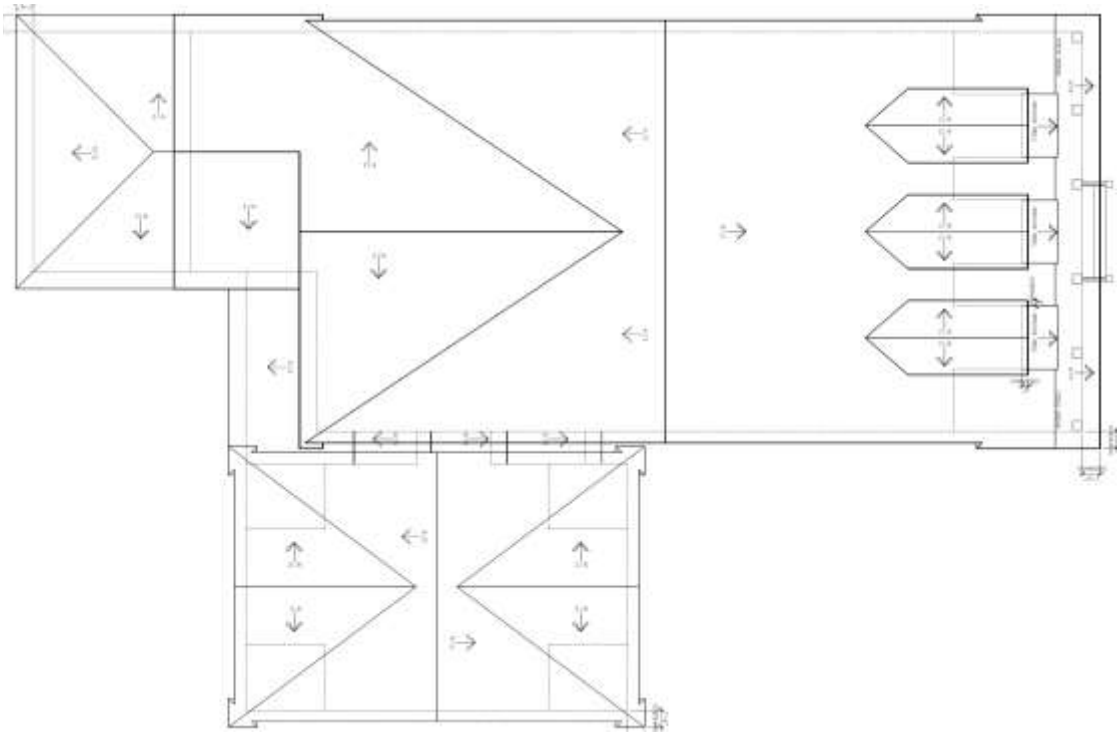

N

FIRST FLOOR PLAN

DENIED – 11/20/14

PROPOSED

N

SECOND FLOOR PLAN

DENIED – 11/20/14

PROPOSED

WINDOW / DOOR SCHEDULE

WINDOW SCHEDULE

WINDOW SCHEDULE				
MARK	QTY	WIDTH	HEIGHT	DESCRIPTION
A	10	3'–0"	7'–0"	SINGLE HUNG
A1	3	3'–0"	7'–0"	SINGLE HUNG TEMPERED
B	3	2'–6"	7'–0"	SINGLE HUNG
C	3	2'–0"	7'–0"	SINGLE HUNG
D	3	3'–0"	4'–6"	SINGLE HUNG
E	1	2'–0"	3'–6"	SINGLE HUNG TEMPERED
F	11	3'–0"	6'–0"	SINGLE HUNG
G	2	2'–8"	5'–0"	SINGLE HUNG TEMPERED
H	1	2'–8"	4'–6"	SINGLE HUNG
H1	2	2'–8"	4'–6"	SINGLE HUNG TEMPERED

DOOR SCHEDULE

DOOR SCHEDULE				
DOOR NO.	QTY.	WIDTH	HEIGHT	DESCRIPTION
1	1	3'–0"	8'–0"	EXTERIOR FRONT DOOR
2	2	3'–0"	8'–0"	EXTERIOR FRENCH DOOR
3	1	3'–0"	8'–0"	20 MIN FIRE RATED DOOR WITH CLOSER
4	1	2'–8"	8'–0"	INTERIOR DOOR
5	4	2'–6"	8'–0"	INTERIOR DOOR
6	1	2'–6"		GLASS DOOR @ SHOWER ENCLOSURE
7	1	(2)2'–0"	8'–0"	INTERIOR FRENCH DOOR (UNIT)
8	1	(2)2'–6"	8'–0"	INTERIOR POCKET DOOR (UNIT)
9	3	2'–8"	6'–8"	INTERIOR DOOR
10	7	2'–6"	6'–8"	INTERIOR DOOR
11	1	3'–0"	6'–8"	INTERIOR DOOR
12	1	(2)1'–6"	6'–8"	INTERIOR FRENCH DOOR (UNIT)
13	4	2'–6"		INTERIOR DOOR (CUT TO FIT)
14	1	18'–0"	8'–0"	OVERHEAD DOOR @ GARAGE
15	1	(2)3'–0"	8'–0"	EXTERIOR FRENCH DOOR (UNIT)

SANBORN FIRE INSURANCE MAPS

1924-1950

Contributing

Noncontributing

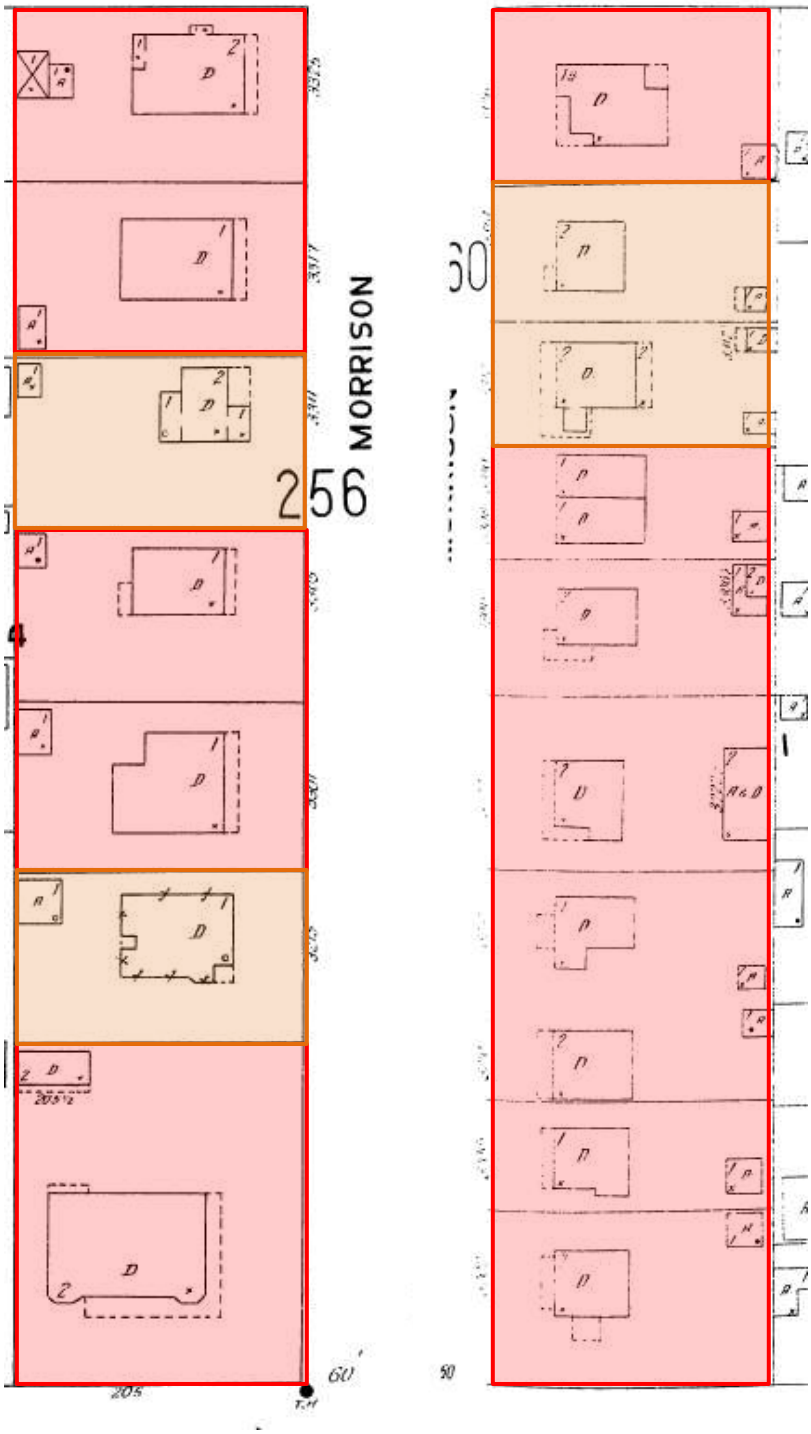

1924-1951

Contributing

Noncontributing

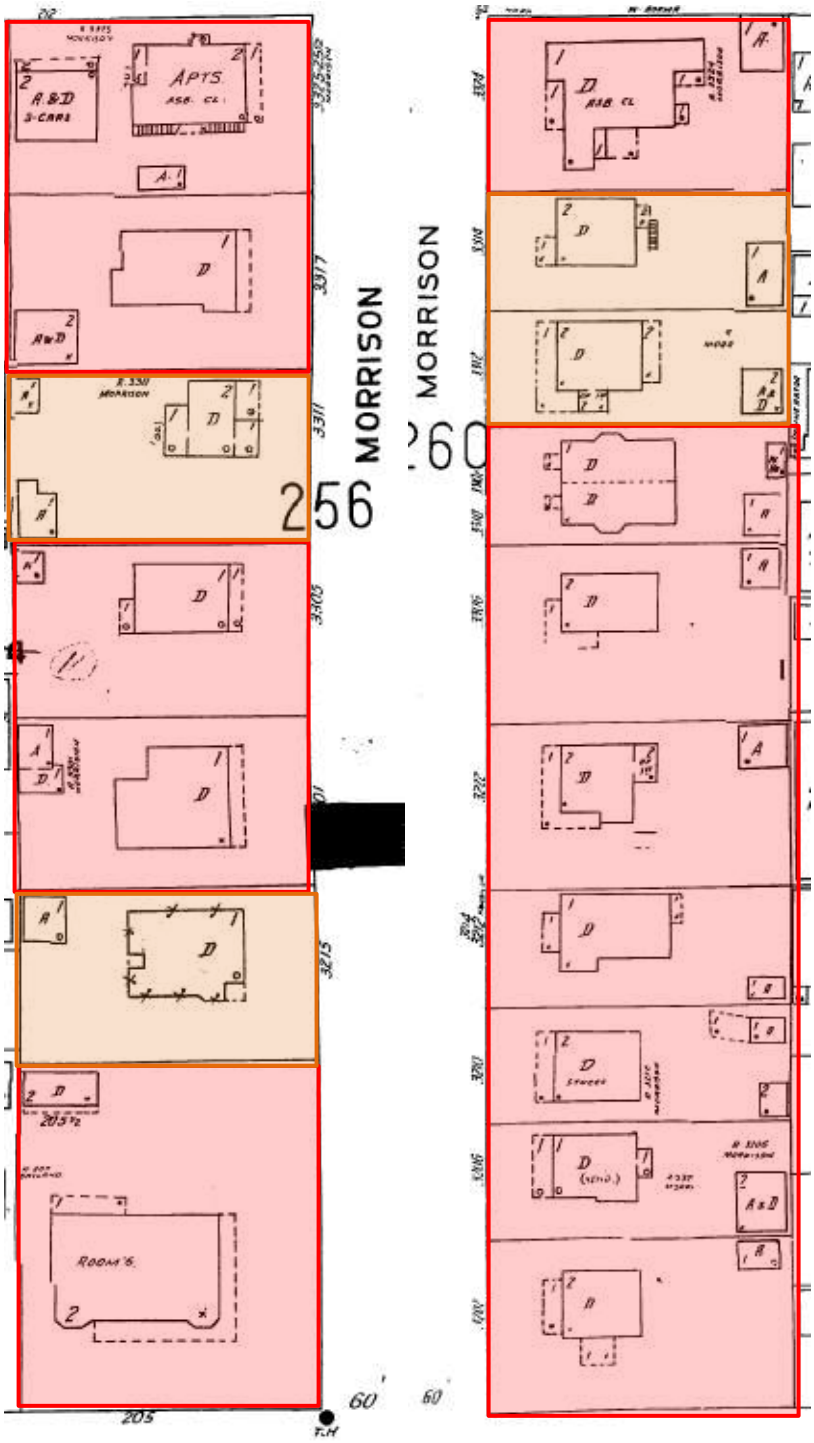

1134 BAYLAND COMPARISON

SIMILAR 1½ /2- STORY CONSTRUCTION NEXT TO HISTORIC FABRIC

C

1134 BAYLAND - FRONT & SIDE ELEVATIONS

1134 BAYLAND REAR & SIDE ELEVATIONS

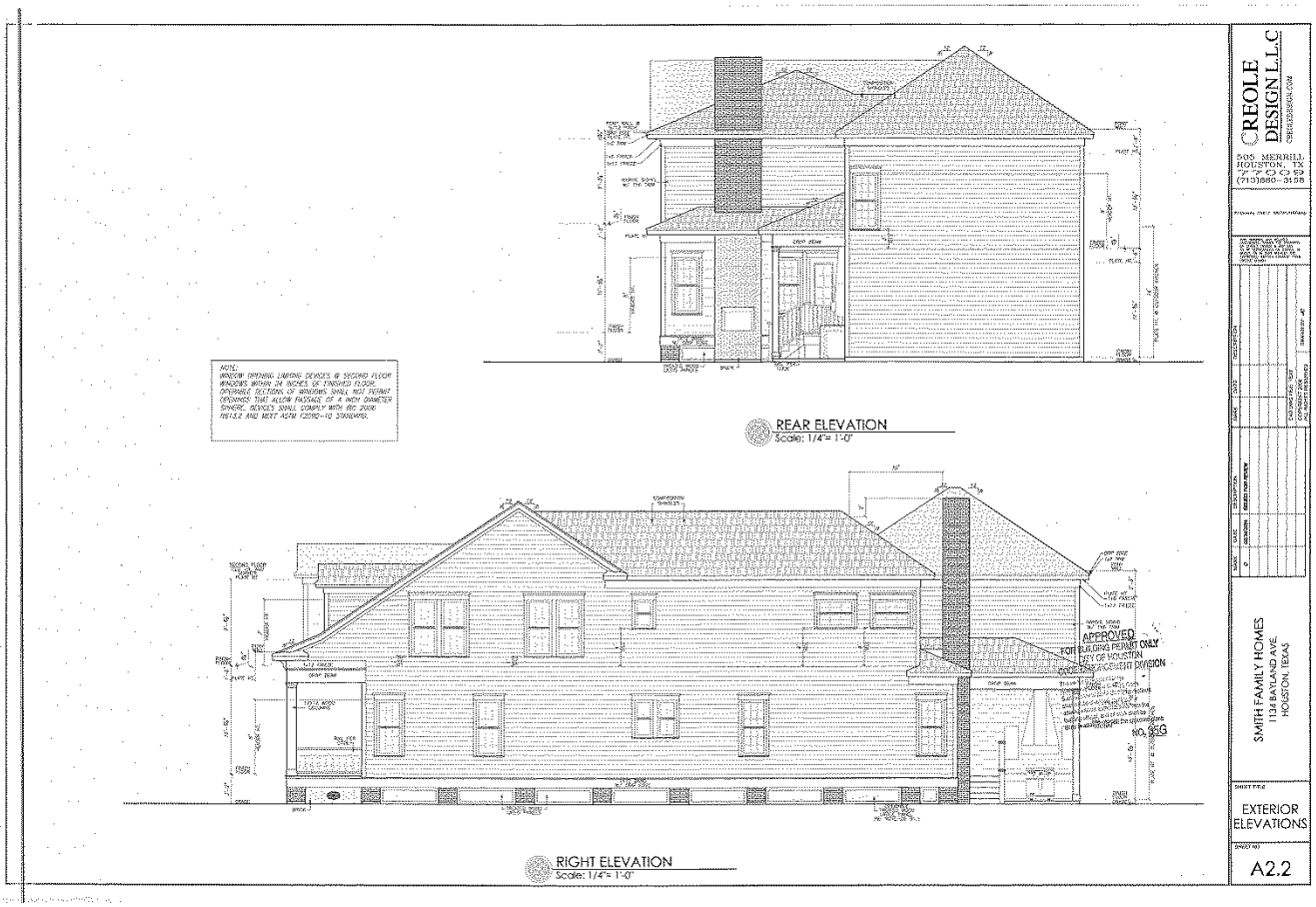

WOODLAND HEIGHTS ADDITION DEED RESTRICTIONS

12/15/2004 22:51 P.1

DEC 15 '04 15:06 VIDEO MONTHLY

Y113189

DECLARATION OF PROTECTIVE COVENANTS

This Declaration of Protective Covenants ("Declaration") is executed by the record title owners (collectively, the "Owners", and individually, an "Owner") of

Lots 1-12, Block 4 Woodland Heights Addition, according to the map or plat recorded in Volume 2, Page 33 and amended in Volume 295, Page 373 of the Map Records of Harris County, Texas (the "Property")

to establish mutually enforceable restrictive covenants for the mutual benefit of the Property and the Owners, and their successors and assigns. The Declaration is a covenant running with the land and is binding upon and enforceable by the Owners, their successors and assigns, as a real (not personal) covenant.

Recitals

1. The Owners, collectively, own record title to all the Property, and each Owner owns record title to the tract identified by their signature (each, a "Tract" and collectively, the "Tracts").

2. The Owners desire to regulate the future development and redevelopment of the Property by establishing appropriate development restrictions.

3. This Declaration is given in consideration of the settlement of disputes among the Owners regarding the current and future uses of the Property.

Covenants

In consideration of the settlement of the disputes between the Owners, and the further consideration of the mutual benefits to the Owners and the Property of this Declaration, the Owners agree as follows:

1. The Tracts and Property may not be subdivided or platted into new parcels with less than 6,500 square feet each with at least 50' frontage street frontage, notwithstanding that portions of the Tracts may be separately platted lots or previously subdivided (but not platted) portions of lots.

2. No building may be constructed on the Property closer than 20 feet to the west right of way line of Morrison Street or the north right of way line of Bayland Avenue, provided that the existing house on Lot 12 and north ½ of Lot 11 may continue to be located as it is, approximately 19 feet from the right of way line of Morrison Street.

3. No buildings may be constructed on any Tract or future created separately owned parcel of the Property except (i) one single family dwelling unit (without garage space), (ii) one detached (with or without covered walkway to the dwelling unit) garage (not exceeding storage space for 3 cars) located at least 60 feet from the front street right

Declaration of Protective Covenants
Lots 1-12, Block 4, Woodland Heights Addition
Houston, Harris County, Texas

1

of way line, with or without upstairs garage apartment (enclosed stairwell allowed), provided that the square footage of the enclosed living space of the apartment may not exceed 50% of the enclosed air conditioned square footage of the primary dwelling unit, and (iii) one single story accessory building which is not a separate dwelling unit and does not exceed 650 square feet in area.

4. The Owners adopt and ratify as valid covenants restricting the Property the Declaration of Restrictions for Woodland Heights recorded under Clerk's File No. L913034 in the Official Public Records of Real Property of Harris County, Texas recorded November 1, 1988 (the "**Woodland Heights Declaration**"). The covenants in Article II of the Woodland Heights Declaration are incorporated herein for all purposes. In the event of conflict between the Declaration and the Woodland Heights Declaration, the most restrictive shall control.

5. Each of the Owners represent that they are not in violation of either the Declaration or the Woodland Heights Declaration, with the exception of Flybaby, Inc. and St. Jude Assisted Living, Inc., who shall be bound by the Agreed Judgment signed on November 23, 2004 in Case No. 2004-38579, Singleton v. Flybaby, Inc. and St. Jude Assisted Living, Inc., in the 190th Judicial District Court of Harris County, Texas, and shall cease their non-conforming use by May 21, 2005.

6. This Declaration may be enforced by the Owners, their successors or assigns with record title to any portion of the Property or by Woodland Heights Civic Association or its successors or assigns as a non-profit entity representing the interests of Woodland Heights Neighborhood. Prior to bringing any action to enforce this Declaration, the party asserting violation must provide prior written notice by certified mail to the alleged violator detailing the alleged violation and the actions required to cure it within thirty (30) days from the posting of such notice within which to cure the violation. The notice may be sent to the residence located on the violator's property and a copy provided to the address reflected on the records of either Harris County Appraisal District or any governmental entity with taxing authority over the parcel in question. The prevailing party in any enforcement action shall collect its reasonable attorney's fees and costs.

7. This Declaration is construed under Texas laws and enforceable by an action brought in the applicable state or federal court with jurisdiction in Harris County, Texas.

8. This Declaration is perpetual and may not be modified except by a writing executed by all of the then record title Owners of all of the Property and recorded in the Official Public Records of Real Property of Harris County, Texas which writing amends or terminates the Declaration.

9. The Recitals are correct and relied upon as the basis for executing this Declaration.

PROJECT DETAILS

Shape/Mass: The residence will measure 35' wide and 83'-10" deep and the attached garage will measure 24'-5" wide and 22'-2" deep; the residence and garage will have an overall width of 59'-5". The residence will have a front eave height of 14'-6" (previously proposed 15'-6") and a rear eave height of 21'-11" (previously proposed 22'-10"), and a ridge height of 33'-6" (previously proposed 38'-5"). The attached garage will have an eave height of 17'-9" and a ridge height of 27'-6". The residence will feature a full width front porch measuring 35' wide and 10' deep (previously proposed 8').

Setbacks: The residence is setback 25'-6" from the front property line, 3'-6" from the side, north property line (previously proposed 27'-6"), 27'-6"from the side, south property line (previously proposed 3'-6"), and 12'-8" from the rear property line. The attached garage will be setback 65'-4" from the front property line, 3'-1" from the side south property line (previously proposed 3'-1" from the side, north property line), and 42'-6" from the rear property line.

Foundation: The residence will be built on a slab foundation (previously proposed pier and beam foundation with brick piers and wood lattice skirting). The foundation will measure 1'-6" in height (previously proposed 2'-6" foundation height). The attached garage will be built on a slab foundation.

Windows/Doors: The residence and garage will feature 1-over-1 wood sash windows, 6 lite wood paneled entry door, single lite wood paneled entry doors, and a sectional overhead garage door.

Exterior Materials: The residence will be clad with smooth finish cementitious horizontal lap siding and will feature an exterior brick chimney. The front porch will feature wood steps, wood handrails and guardrails and 10" round fiberglass columns (previously proposed 1' and operable wood shutters on the first floor of the front elevation).

Roof: The roof will feature a side gable roof with gable dormers. The roof will have a combination of 6/12 and 4/12 roof pitches (previously proposed 6/12 and 7/12 roof pitches); the gable dormers will have an 8/12 pitch. The residence will feature closed eaves with a 1'-6" overhang. The attached garage will feature a cross gable roof with a combination of 6/12 and 8/12 roof pitches. The garage will feature closed eaves with a 1'-6" overhang. The residence and garage will feature classic style eave returns and will be clad with composite shingles.

Front Elevation: (East) The residence will feature a full width front porch with six 10" round columns, wood steps, and wood handrails and guardrails. The first floor of the residence will feature four 1-over-1 wood sash windows and a 6 lite wood paneled entry doors. The residence will feature three gable dormers with 1-over-1 wood sash windows. The garage will feature a sectional overhead garage door and the second floor will feature a 1-over-1 sash window.

Side Elevation: (North) The first floor will feature seven 1-over-1 sash windows and the second floor will feature six 1-over-1 sash windows. The residence will feature an exterior brick chimney. The side gable will feature a wood louvered vent.

Side Elevation: (South) The first floor of the residence will feature four 1-over-1 sash windows and a set of single lite wood paneled french doors. The second floor will feature three 1-over-1 sash windows. The side gable will feature a wood louvered vent.

Rear Elevation: (West) The first floor will feature a ribbon of three 1-over-1 sash windows, a single lite wood paneled entry door and a covered porch measuring 27' wide and 11'-3" deep. The second floor of the residence will feature four 1-over-1 sash windows and the garage will feature a 1-over-1 sash window.