CERTIFICATE OF APPROPRIATENESS

Application Date: August 30, 2016

Applicant: Chuck Stava, owner

Property: 2214 Kane St, Tract 3, Block 396, Baker W R NSBB Subdivision. The property includes a historic 1,928 square foot, two-story wood frame single-family residence and a detached garage situated on a 4,900 square foot (49' x 100') interior lot.

Significance: Contributing Queen Anne Victorian style residence, constructed circa 1883, located in the Old Sixth Ward Historic District.

Proposal: Alteration – Addition

The applicant proposes to construct a new second story addition upon a non-historic ca. 2002 rear addition to accommodate a reclaimed double-winder staircase salvaged from the ca. 1882 Shudde House (See Attachment A on p. 15)

- Construct an approximately 65 square foot second story addition at the rear of the original residence (set back approximately 50' from the front porch) and upon a non-historic ca. 2002 rear addition.
- The addition will measure approximately 9' wide by 7' deep with a 22' eave height and 26' ridge height. The addition does not exceed the existing residence's ridge height.
- The addition will feature three salvaged 2/2 wood windows and will be clad in beveled cypress siding. One octagonal stained glass window on the first level of the ca. 2002 addition will be removed and replaced with a reclaimed four-panel wood door.

See enclosed application materials and detailed project description on p. 5-15 for further details.

Public Comment: The Old Sixth Ward Historic Preservation Committee is in support of the project. See Attachment B on p. 16.

Civic Association: No comment received at this time.

Recommendation: Approval

HAHC Action: Approved

All materials in exterior walls, including windows, siding, framing lumber, and interior shiplap must be retained except where removal or replacement has been explicitly approved by HAHC. Shiplap is an integral structural component of the exterior wall assembly in balloon framed structures and its removal can cause torqueing, twisting and collapse of exterior walls. Shiplap may be carefully shored and removed in small portions to insulate, run wire or plumbing, and should be replaced when the work is complete. Maintenance and minor in-kind repairs of exterior materials may be undertaken without HAHC approval, but if extensive damage of any exterior wall element is encountered during construction, contact staff before removing or replacing the materials. A revised COA may be required.

CERTIFICATE OF APPROPRIATENESS

Basis for Issuance: HAHC Approval
Effective: September 22, 2016

PLANNING & DEVELOPMENT DEPARTMENT

COA valid for two years from effective date. COA is in addition to any other permits or approvals required by municipal, state and federal law. Permit plans must be stamped by Planning & Development Department for COA compliance prior to submitting for building or sign permits. Any revisions to the approved project scope may require a new COA.

APPROVAL CRITERIA

ALTERATIONS, REHABILITATIONS, RESTORATIONS AND ADDITIONS

Sec. 33-241: HAHC shall issue a certificate of appropriateness for the alteration, rehabilitation, restoration or addition of an exterior feature of (i) any landmark, (ii) protected landmark, (iii) any building, structure or object that is part of an archaeological site, or (iv) contributing building in a historic district upon finding that the application satisfies the following criteria, as applicable:

S	D	NA		**S - satisfies D - does not satisfy NA - not applicable**
☒	☐	☐	(1)	The proposed activity must retain and preserve the historical character of the property;
☒	☐	☐	(2)	The proposed activity must contribute to the continued availability of the property for a contemporary use;
☒	☐	☐	(3)	The proposed activity must recognize the building, structure, object or site as a product of its own time and avoid alterations that seek to create an earlier or later appearance;
☒	☐	☐	(4)	The proposed activity must preserve the distinguishing qualities or character of the building, structure, object or site and its environment;
☒	☐	☐	(5)	The proposed activity must maintain or replicate distinctive stylistic exterior features or examples of skilled craftsmanship that characterize the building, structure, object or site;
☒	☐	☐	(6)	New materials to be used for any exterior feature excluding what is visible from public alleys must be visually compatible with, but not necessarily the same as, the materials being replaced in form, design, texture, dimension and scale;
☐	☐	☒	(7)	The proposed replacement of missing exterior features, if any, should be based on an accurate duplication of features, substantiated by available historical, physical or pictorial evidence, where that evidence is available, rather than on conjectural designs or the availability of different architectural elements from other structures;
☒	☐	☐	(8)	Proposed additions or alterations must be done in a manner that, if removed in the future, would leave unimpaired the essential form and integrity of the building, structure, object or site;
☒	☐	☐	(9)	The proposed design for any exterior alterations or addition must not destroy significant historical, architectural, archaeological or cultural material, including but not limited to siding, windows, doors and porch elements;
☒	☐	☐	(10)	The proposed alteration or addition must be compatible with the massing, size, scale material and character of the property and the context area; and
☐	☐	☒	(11)	The distance from the property line to the front and side walls, porches, and exterior features of any proposed addition or alteration must be compatible with the distance to the property line of similar elements of existing contributing structures in the context area.

OLD SIXTH WARD DESIGN GUIDELINES

☒	☐	☐	In accordance with Sec. 33-276, the proposed activity must comply with the City Council approved Design Guidelines.

N

PROPERTY LOCATION

OLD SIXTH WARD HISTORIC DISTRICT

Building Classification
Contributing
Non-Contributing
Park

INVENTORY PHOTO

SOUTH ELEVATION – FRONT FACING KANE

EXISTING

PROPOSED

WEST SIDE ELEVATION

EXISTING

PROPOSED

WEST SIDE ELEVATION – LINE OF SIGHT

EXISTING

PROPOSED

PROPOSED CROSS SECTION – NORTH (REAR) ELEVATION

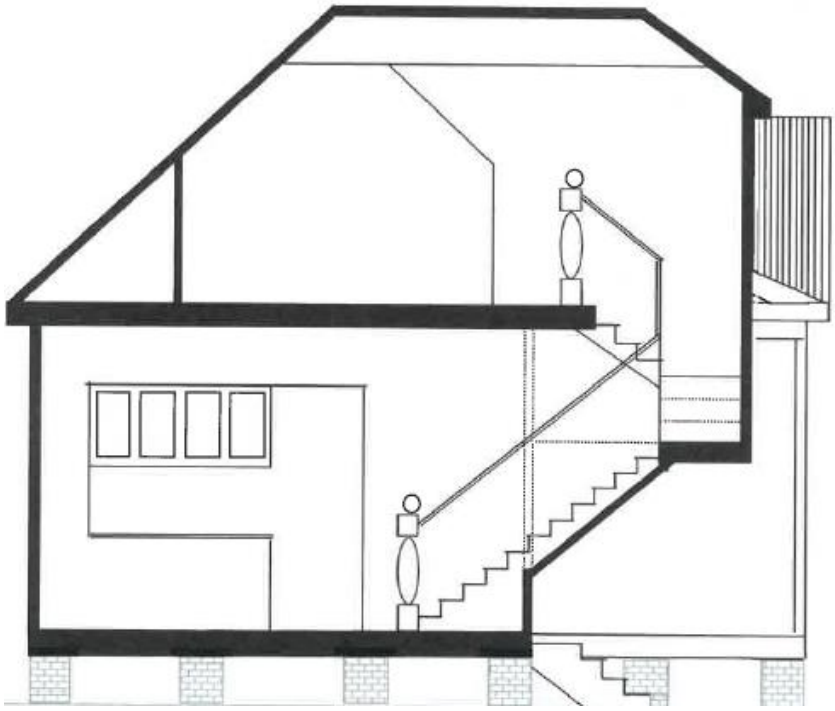

SITE PLAN

N ➡

EXISTING

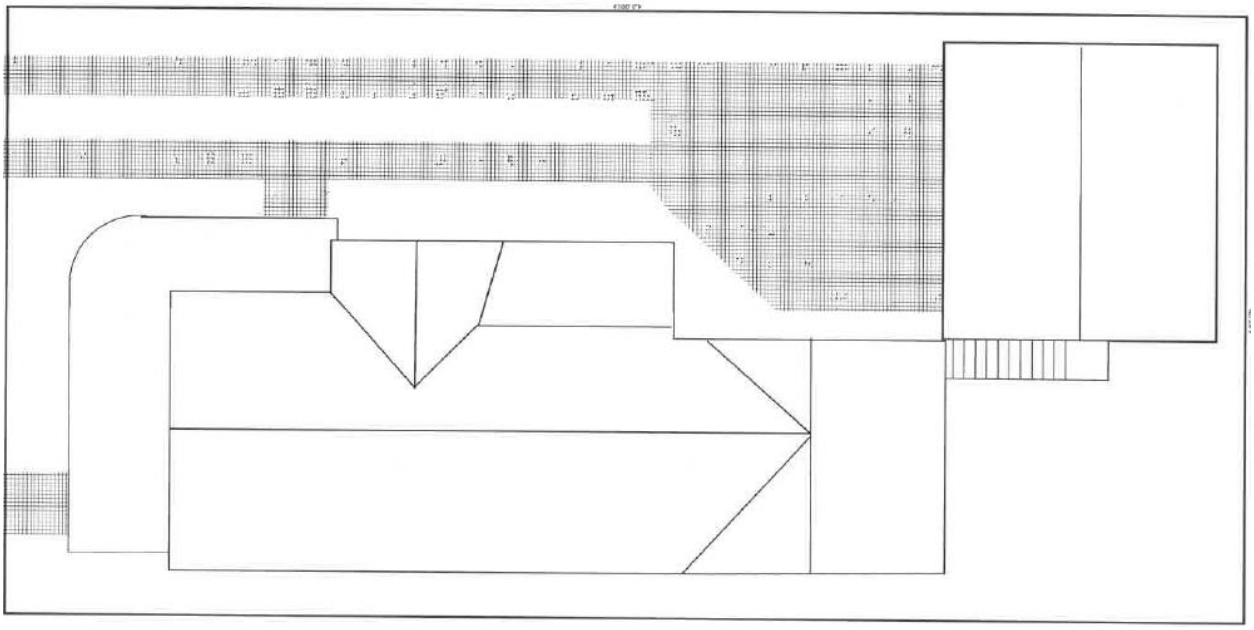

PROPOSED

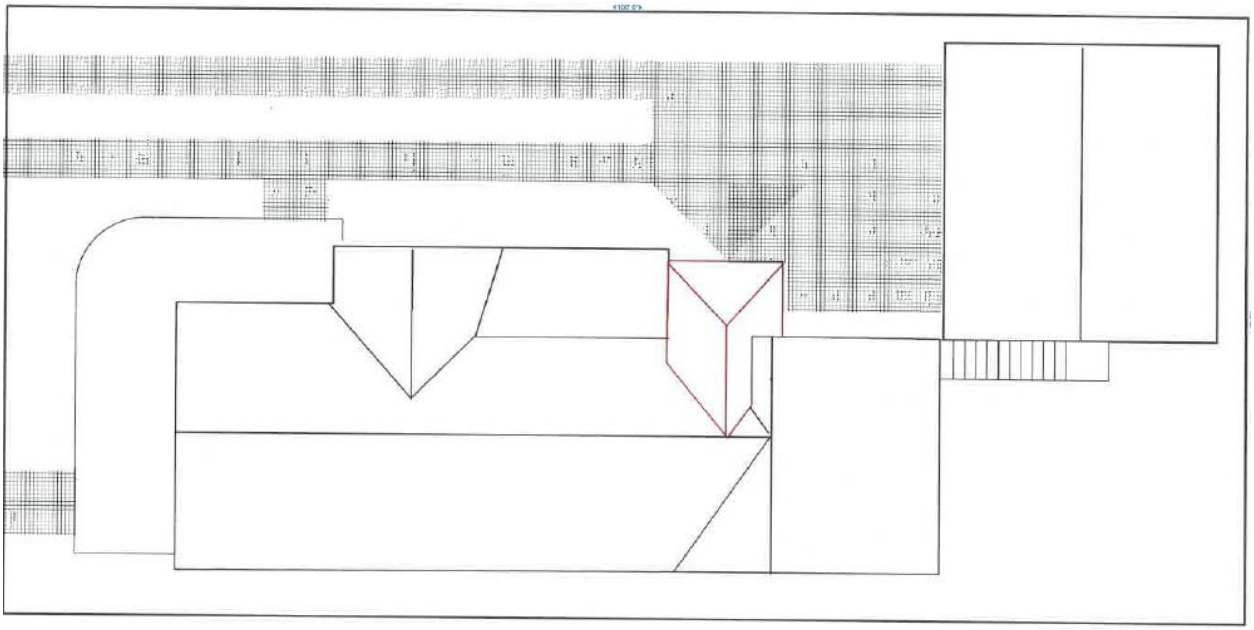

ROOF PLAN

N

EXISTING

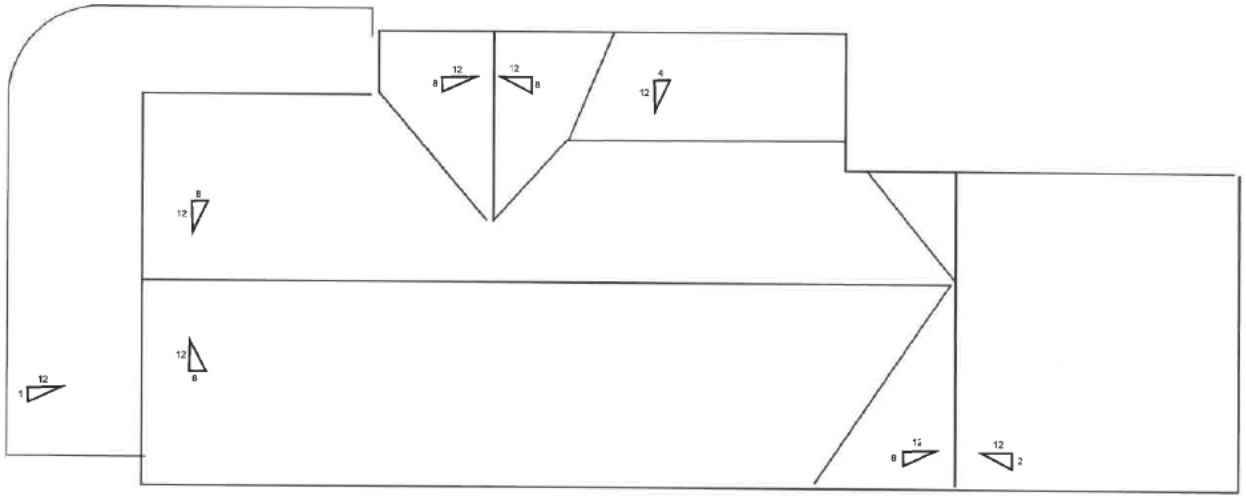

PROPOSED

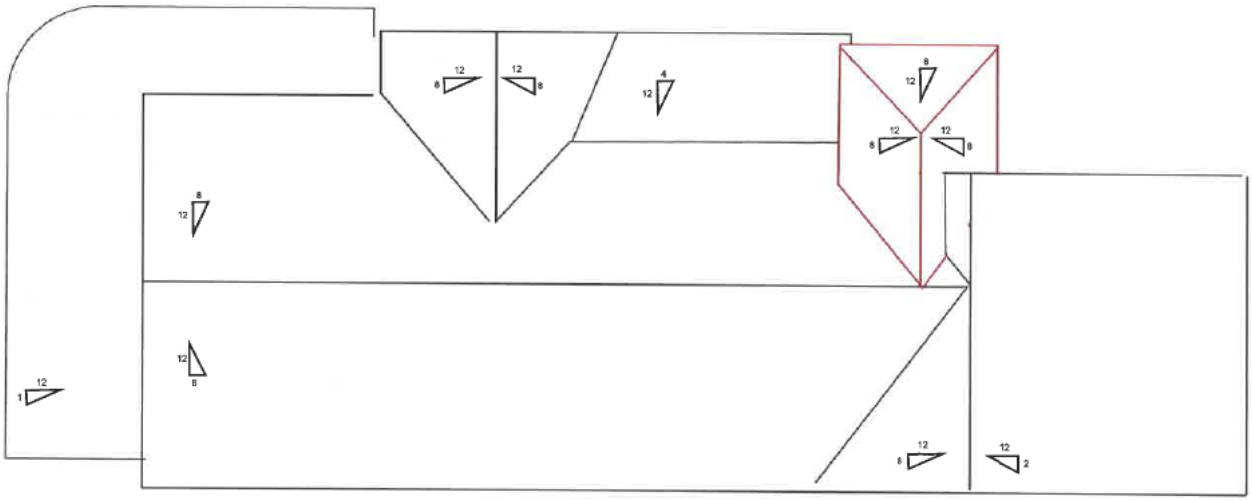

FIRST FLOOR PLAN

N

EXISTING

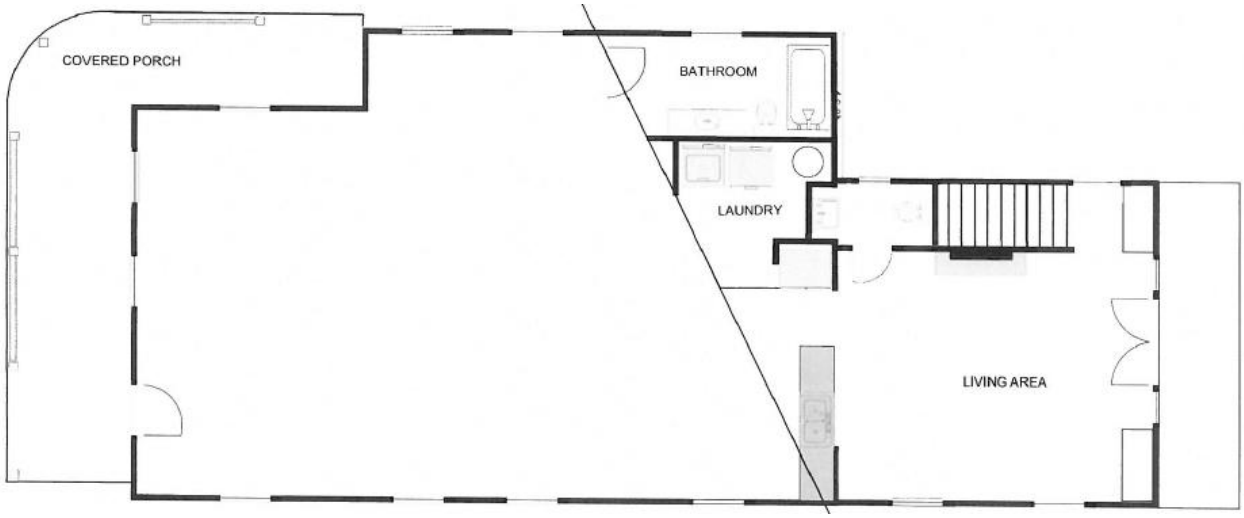

PROPOSED

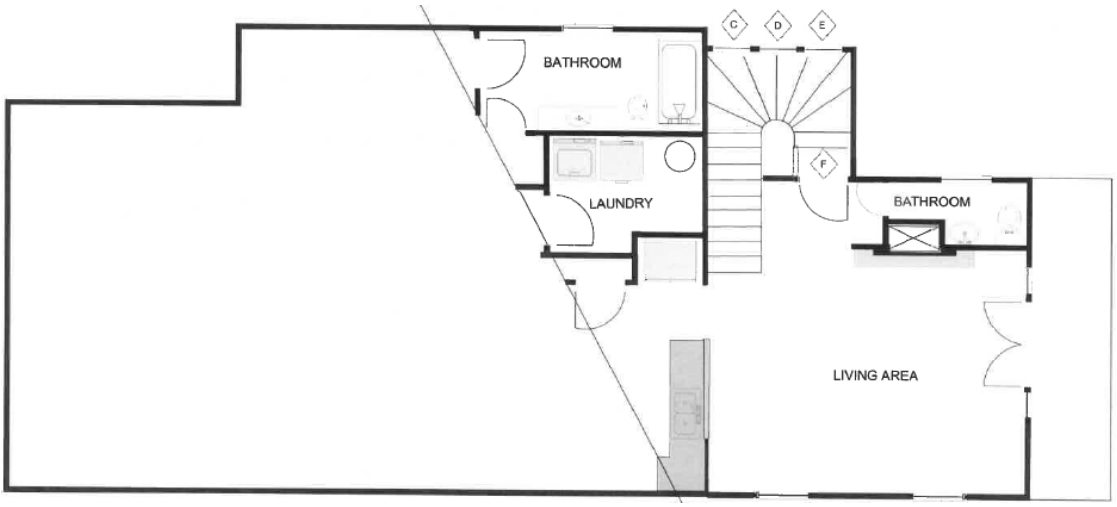

SECOND FLOOR PLAN

N

EXISTING

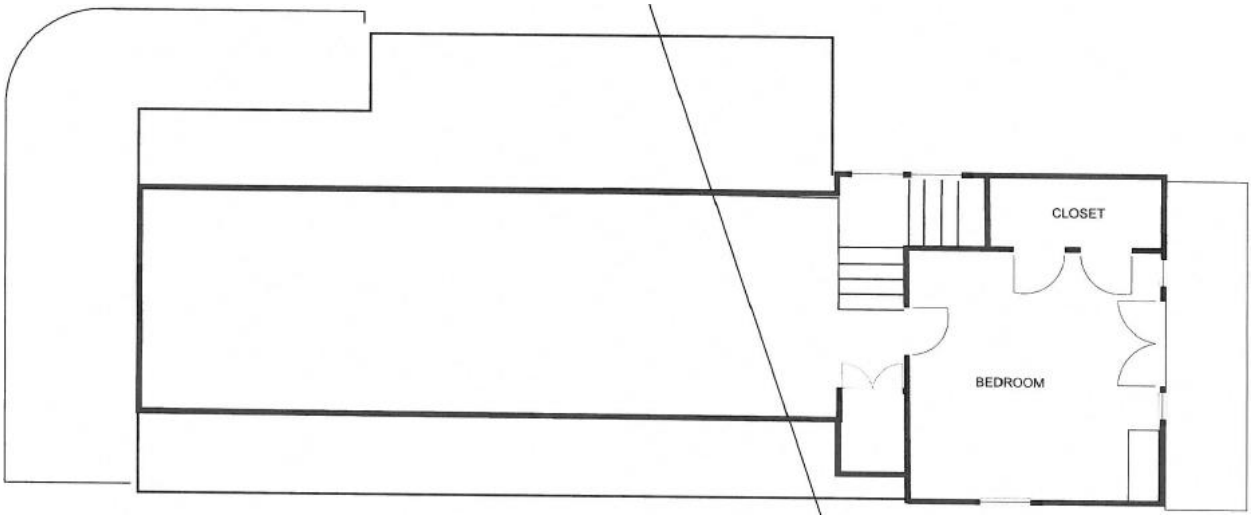

PROPOSED

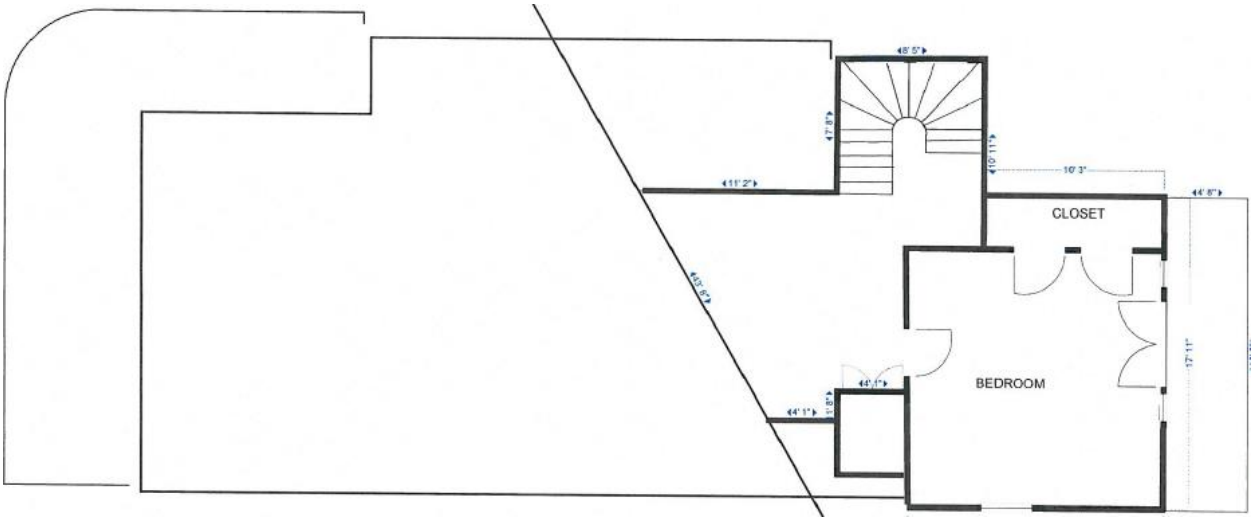

WINDOW / DOOR SCHEDULE

Existing

1. (a) Pair of 24"x42" newish (15 years old) double hung 1/1 wood windows to be removed
2. (b) Octagonal stained glass window to be removed

Proposed

1. (c, d, e) Set of 3 reclaimed 29"x78" double hung 2/2 windows with wood frame storm windows
2. (f) Reclaimed 36"x83" wood four panel door.

PROJECT DETAILS

Shape/Mass: The existing two-story residence measures approximately 27' wide by 73' deep with a 26' ridge height. The second story addition will measure approximately 9' wide by 7' deep with a 21'-10" eave height and a 26' ridge height. The addition will be cantilevered over the driveway to allow vehicles to pass underneath.

Setbacks: The proposed addition will be setback approximately 50' from the front porch. The second story addition does not exceed the width or depth of the existing residence, and therefore does not affect the existing side or rear setbacks.

Windows/Doors: The proposed scope of work limits the alteration of windows and doors to the west elevation. One octagonal stained glass window on the first level of the ca. 2002 addition will be removed. Two 24" x 42" 1/1 double-hung wood windows on the second level of the ca. 2002 addition will be removed. One reclaimed 36" x 83" four-panel wood door will be installed on the first level and three 29" x 78" 2/2 double-hung wood windows with frame storm windows will be installed on the proposed second story addition. All other existing windows and doors on the residence will remain.

Exterior Materials: The existing residence is clad in beveled cypress siding. The proposed addition will be clad in beveled cypress siding.

Roof: The existing residence has a cross-gable roof with an 8/12 pitch. The wrap-around porch and non-historic rear addition feature shallower pitches of 1/12 and 2/12. The residence features a corrugated metal covering. The proposed addition will have a hipped roof with an 8/12 pitch and will be covered with corrugated metal.

Front Elevation: (South) The proposed addition will have a hipped roof with approximately 9' of additional roofline perpendicularly intersecting with the existing gable roof. The addition is setback approximately 50' from the front porch and will have a limited visual impact on the front elevation.

Side Elevation: (West) One octagonal stained glass window on the first level of the ca. 2002 addition will be removed and replaced with a reclaimed 36" x 83" four-panel wood door. Two 24" x 42" 1/1 double-hung wood windows on the second level of the ca. 2002 addition will be removed. The second story addition will be set back approximately 50' from the front porch and feature three 29" x 78" 2/2 double-hung wood windows.

The addition does not affect the east elevation. The rear (north) elevation is not visible from the public right of way.

ATTACHMENT A

APPLICANT PHOTOS

ATTACHMENT B

-----Original Message-----
From: Adrian M [redacted]
Sent: Wednesday, September 21, 2016 3:13 PM
To: Kriegl, Matthew - PD
Cc: Old Sixth Ward Preservation
Subject: 2214 Kane Alteration Addition CofA

Matt,

It is the opinion of this committee that the plans as submitted to the City for this cycle regarding 2214 Kane meet our requirements. Let me know if you need any further comment.

Adrian Melendez
Co-Chair OSW Historic Preservation Committee