CERTIFICATE OF APPROPRIATENESS

Application Date: July 10, 2014

Applicant: Mario Campos, Campos International, LLC, for Gary Nguyen, owner

Property: 715 Henderson Street, Tract 7, Block 407, Baker WR NSBB Subdivision. The property includes a historic one-story wood clad storefront commercial building situated on a 4,000 square foot corner lot.

Significance: Contributing storefront commercial building, constructed circa 1935, located in the Old Sixth Ward Historic District.

Proposal: Alteration – Install a new 4' diameter round building sign above the contributing corner store canopy facing Henderson Street. This project was previously denied by the HAHC at the August 2014 Commission meeting. The applicant has submitted two new options:

Option #1 will feature a 3/16" thick 4' diameter plywood disk that will have a full color vinyl logo applied to the front.

Option #2 will feature a 5" deep, .8 mm thick prefinished aluminum cabinet with a 3/16" thick wood face panel and an applied full color vinyl logo.

Neither sign will be internally lit.

See enclosed application materials and detailed project description on p. 5-10 for further details.

Public Comment: No public comment received.

Civic Association: The Old Sixth Ward Neighborhood Committee is not in support of this project. See Attachment A.

Recommendation: **Denial - does not satisfy criteria**

HAHC Action: **-**

DRAFT

APPROVAL CRITERIA

ALTERATIONS, REHABILITATIONS, RESTORATIONS AND ADDITIONS

Sec. 33-241(a): HAHC shall issue a certificate of appropriateness for the alteration, rehabilitation, restoration or addition of an exterior feature of (i) any landmark or protected landmark, (ii) any building, structure or object that is contributing to an historic district, or (iii) any building, structure or object that is part of an archaeological site, upon finding that the application satisfies the following criteria, as applicable:

S - satisfies D - does not satisfy NA - not applicable

S	D	NA		
☒	☐	☐	(1)	The proposed activity must retain and preserve the historical character of the property;
☒	☐	☐	(2)	The proposed activity must contribute to the continued availability of the property for a contemporary use;
☒	☐	☐	(3)	The proposed activity must recognize the building, structure, object or site as a product of its own time and avoid alterations that seek to create an earlier or later appearance;
☒	☐	☐	(4)	The proposed activity must preserve the distinguishing qualities or character of the building, structure, object or site and its environment;
☒	☐	☐	(5)	The proposed activity must maintain or replicate distinctive stylistic exterior features or examples of skilled craftsmanship that characterize the building, structure, object or site;
☒	☐	☐	(6)	New materials to be used for any exterior feature excluding what is visible from public alleys must be visually compatible with, but not necessarily the same as, the materials being replaced in form, design, texture, dimension and scale;
☒	☐	☐	(7)	The proposed replacement of missing exterior features, if any, should be based on an accurate duplication of features, substantiated by available historical, physical or pictorial evidence, where that evidence is available, rather than on conjectural designs or the availability of different architectural elements from other structures;
☒	☐	☐	(8)	Proposed additions or alterations must be done in a manner that, if removed in the future, would leave unimpaired the essential form and integrity of the building, structure, object or site;
☒	☐	☐	(9)	The proposed design for any exterior alterations or addition must not destroy significant historical, architectural or cultural material and must be compatible with the size, scale, material and character of the property and the area in which it is located;
☒	☐	☐	(10)	The setback of any proposed construction or alteration must be compatible with existing setbacks along the blockface and facing blockface(s);
☐	☐	☒	(11)	The proposed activity will comply with any applicable deed restrictions.

OLD SIXTH WARD DESIGN GUIDELINES

☐	☒	☐	In accordance with Sec. 33-276, the proposed activity must comply with the City Council approved Design Guidelines.

The proposed sign does not comply with the Recommendations for Building Signage *(pg. 18) of the Old Sixth Ward Protected Historic District Design Guidelines. Although the proposed options now feature a wood backing, the proposed full color vinyl logo applied to the front of the sign violates the prohibition against the use of plastic letters.*

See pages 8 and 9 of this report for more detail.

DRAFT

N

PROPERTY LOCATION

OLD SIXTH WARD HISTORIC DISTRICT

Building Classification
- Contributing
- Non-Contributing
- Park

INVENTORY PHOTO

DRAFT

SIGN DETAILS - DESIGN

DENIED AUGUST 2014

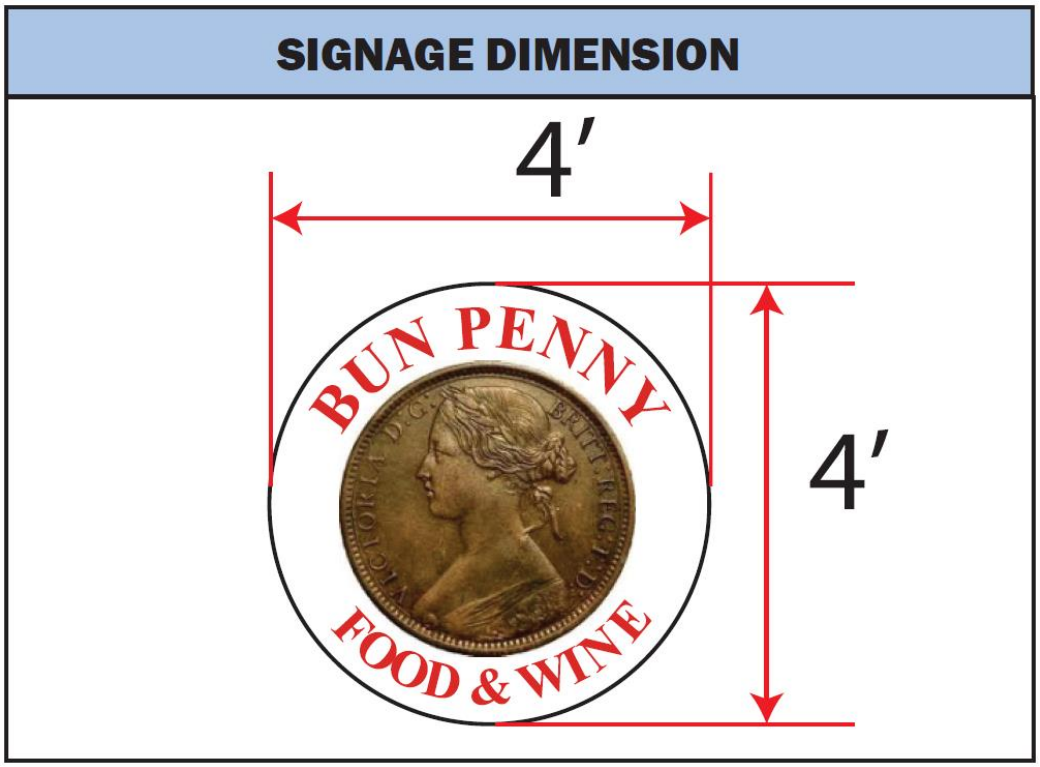

ADDITIONAL SIGN DETAILS

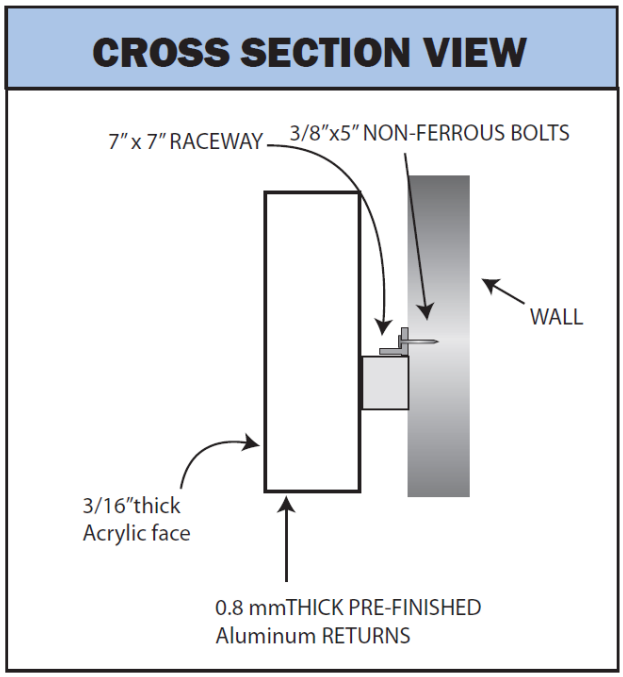

PROPOSED SIGN DETAILS – DESIGN OPTION #1

PROPOSED

SIGNAGE DIMENSION

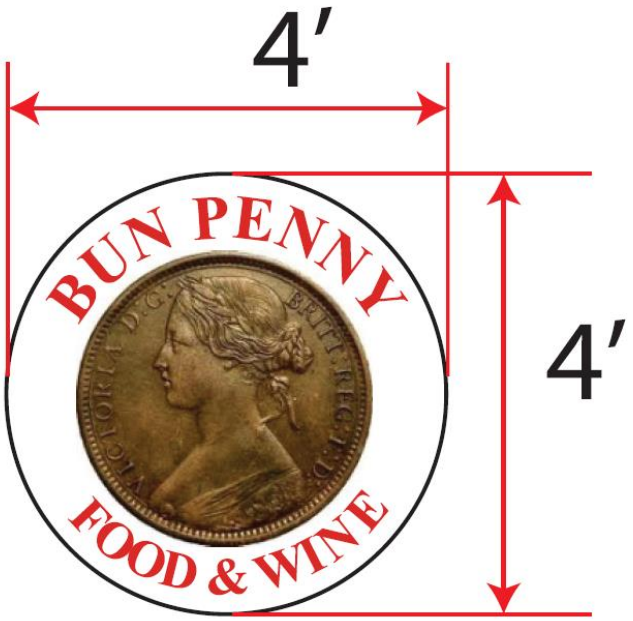

ADDITIONAL SIGN DETAILS

CROSS SECTION VIEW

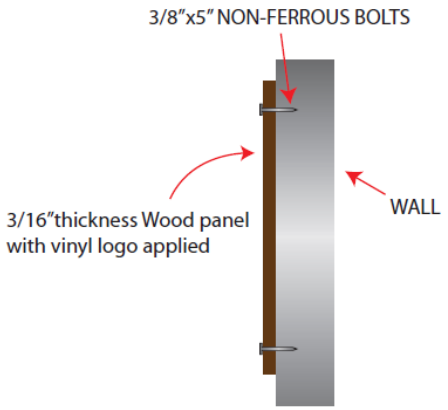

SPECIFICATIONS

FABRICATE AND INSTALL PANEL SIGN ON A WALL

SIGN MATERIAL : 3/16" thick Wood panel
FACE COLOR : Full color printed Vinyl

PROPOSED SIGN DETAILS – DESIGN OPTION #2

PROPOSED

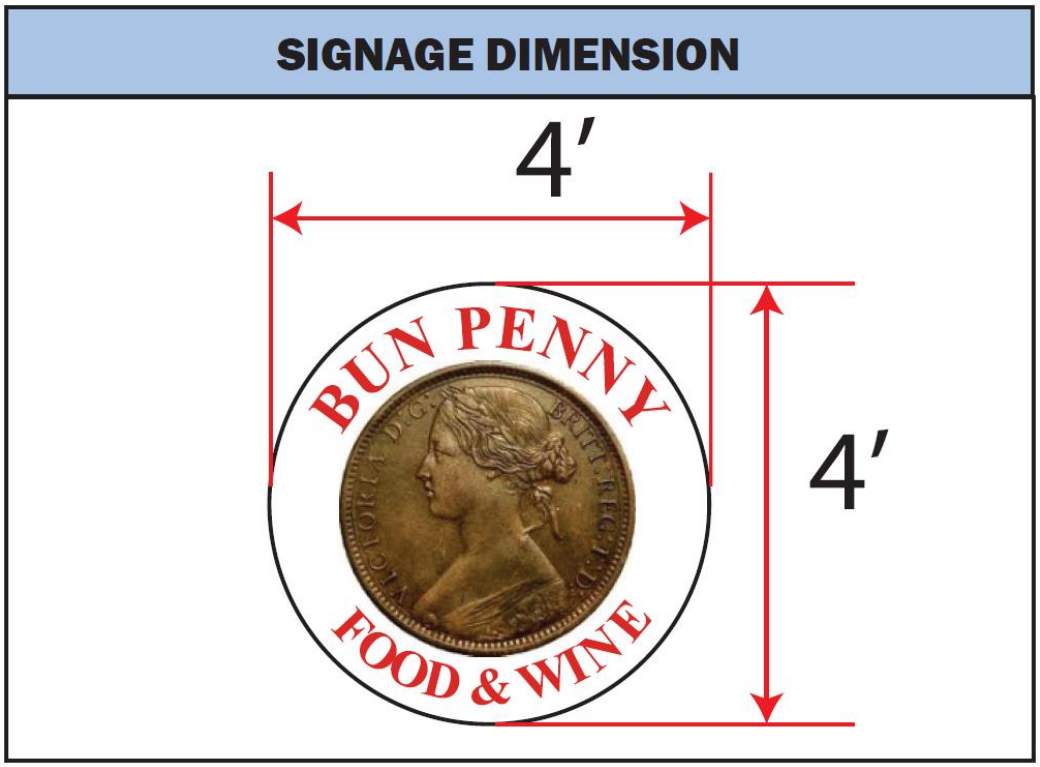

ADDITIONAL SIGN DETAILS

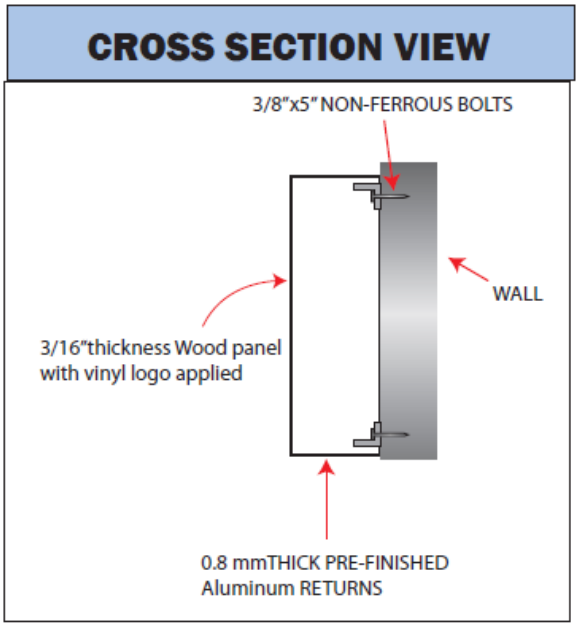

SPECIFICATIONS

FABRICATE AND INSTALL BOX SIGN ON A WALL

RETURNS : 5" DEEP .040 Aluminum - Black
FACE MATERIAL : 3/16" thick Wood panel
FACE COLOR : Full color printed Vinyl
TRIM : 1" jewelite Black

ADDITIONAL SIGN DETAILS

STORE FRONT VIEW

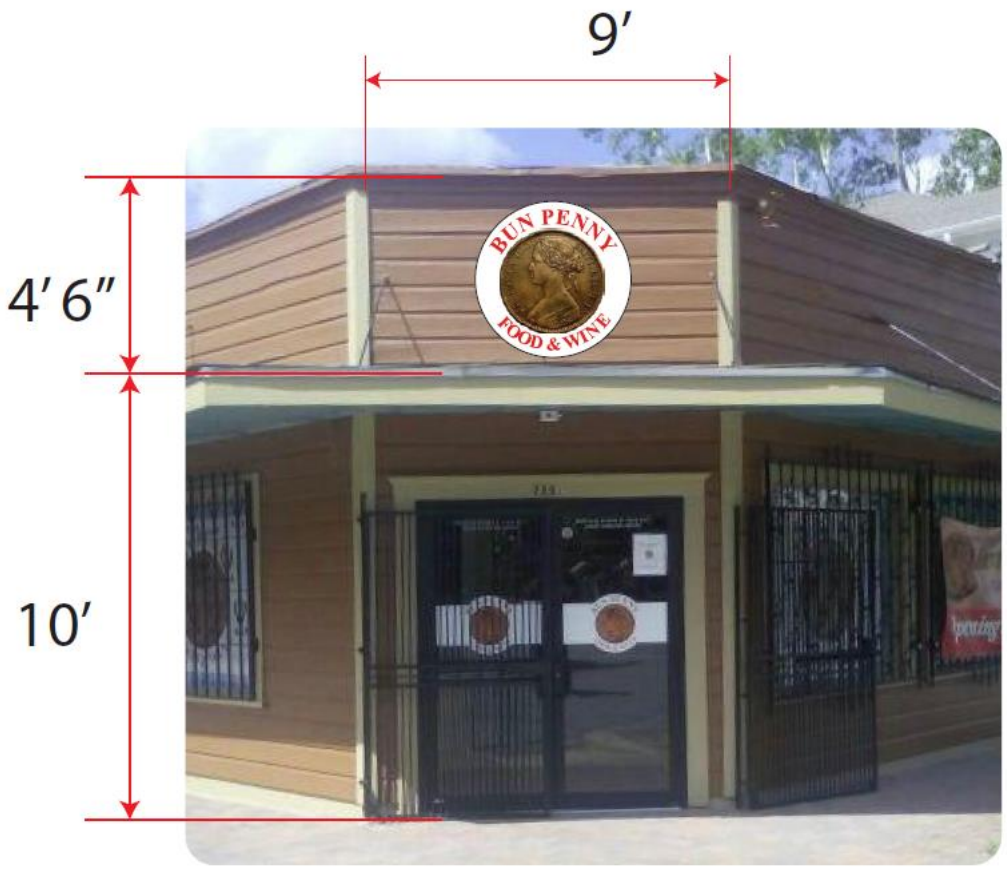

SUPPLEMENTAL INFORMATION

DESIGN GUIDELINES FOR THE OLD SIXTH WARD PROTECTED HISTORIC DISTRICT

C. Language Conventions

1. Provisions activated by certain auxiliary verbs are to be read as follows:
   a. *Shall* indicates a mandatory provision.
   b. *Should* indicates a recommended provision.
   c. *May* indicates an optional provision.
2. Certain terms may be abbreviated as follows:
   a. *Director* means the Director of the Department of Planning and Development.
   b. *District* means the Old Sixth Ward Protected Historic District.
   c. *HAHC* means the Houston Archaeological and Historical Commission.
   d. *Houston Code* means the City of Houston Code of Ordinances.

Pg. 3

D. Signage

While Old Sixth Ward is predominantly residential in character, there are a few small scale commercial buildings in the District. There are also instances of residential structures that have been converted to a small office or other commercial uses. The following provides a guideline to types of signs that would be considered appropriate.

1. General Provisions: Signage within the District should be designed and painted in a manner to respect the historic character of the buildings and the neighborhood. The signs should be:
   a. Appropriate in size and scale.
   b. Constructed of high quality materials and craftsmanship.
   c. Located in a logical place on the building or in the front yard, and should not obstruct key elements or details of the building.
   d. In a style that is compatible with the character of the services or merchandise.
   e. (If lighted) Illuminated indirectly and using an external light source.

Pg. 17

Recommendations for specific sign types are as follows:

a. Building Signage: The developer of a building may give the building a name, or the major tenant of the building may place its name on the building, according to the following specifications:

1) Placement:
   (a) Sign should be placed near the top of the building.
   (b) Sign should be placed above upper floor windows.
   (c) Sign is to be mounted directly on the wall surface, and the background must be the building wall.
   (d) Sign must face a public street.
   (e) Signage may be placed on a maximum of two building sides.
   (f) Signs may be cut or carved.
   (g) No roof signs are permitted.

2) Dimensions:
   (a) A maximum of 20 square feet for each sign is permitted.
   (b) Lettering may be a maximum of 16″.
   (c) Sign may include a logo, which will be counted toward total square feet.

3) Letter materials:
   (a) Sign may be metal, stone, wood, paint, carved, or plaster. No plastic letters are permitted.

4) Lighting:
   (a) Front-lit signs (illuminated by an external light source) are acceptable. No backlit or channel cut lighting permitted.

5) Other provisions:
   (a) No neon signs are permitted.
   (b) Signs shall be static; no rotating, electronic, or digital signs are appropriate.
   (c) Inclusion of a numerical date is optional.

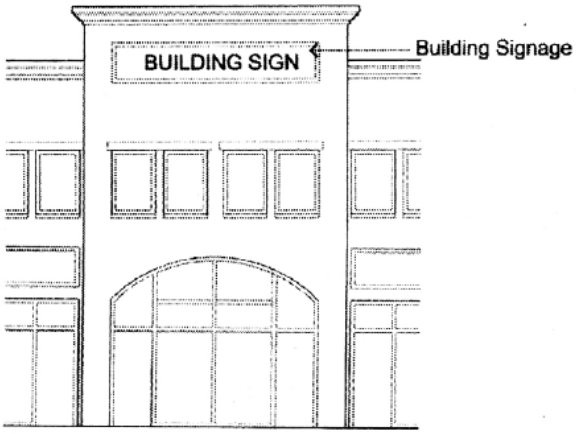

Pg. 18

PROJECT DETAILS

Shape/Mass: The proposed round building sign is 4' in diameter and will feature a full color vinyl logo.

The sign will be installed above the existing canopy approximately 10' up from the sidewalk. See drawings and photos for more detail.

Exterior Materials: **Option #1:** The proposed sign will feature a 3/16" 4' diameter plywood disk that will have a full color vinyl logo applied to the front with the words 'BUN PENNY FOOD & WINE' along with an image comprised of a British penny featuring Queen Victoria's likeness. The sign will be fastened to the building with 3/8" x 5" non-ferrous bolts. The sign will be lit by an exterior light source

Option #2: The proposed sign will feature a 5" deep, .8 mm thick prefinished aluminum cabinet with at 3/16" thick wood face panel and an applied full color vinyl logo with the words 'BUN PENNY FOOD & WINE' along with an image comprised of a British penny featuring Queen Victoria's likeness. The sign will be fastened to the building with 3/8" x 5" non-ferrous bolts. The sign will be lit by an exterior light source

See drawings for more detail.

DRAFT