CERTIFICATE OF APPROPRIATENESS

Application Date: May 21, 2015

Applicant: Bob Fretz, owner

Property: 420 Main Street, Commercial Unit .4998 Int Common Land and ELE, Byrds Lofts Condos Amend. The property includes a 4,145 historic commercial building that has been converted into commercial space at ground level and residential units on the second and third floors. It is situated on a corner lot.

Significance: Contributing Moderne-style commercial building, constructed circa 1935, located in the Main Street Market Square Historic District. A renovation in 2004 included a full window restoration at the 2nd and 3rd levels and an installation of a new 1st level storefront system.

Proposal: Alteration – Remove all steel double-casement and fixed windows on the second and third floor that are damaged beyond repair. Install custom aluminum windows to closely match existing window configuration to fit existing openings. This is a renewal of a previously granted certificate of appropriateness.

The original 2nd and 3rd level windows were restored in 2004. The frames have deteriorated internally by water penetration and corrosion to the point where new glass can no longer be inserted and secured. Glass has been continuously replaced due to breakage caused by vibrations of the rail line and strong winds. Staff confirmed the presence of heavy corrosion, broken glass and water infiltration during a site visit.

See enclosed application materials and detailed project description on p. 4-18 for further details.

Public Comment: No public comment received.

Civic Association: No comment received.

Recommendation: **Approval**

HAHC Action: **-**

DRAFT

APPROVAL CRITERIA

ALTERATIONS, REHABILITATIONS, RESTORATIONS AND ADDITIONS

Sec. 33-241(a): HAHC shall issue a certificate of appropriateness for the alteration, rehabilitation, restoration or addition of an exterior feature of (i) any landmark or protected landmark, (ii) any building, structure or object that is contributing to an historic district, or (iii) any building, structure or object that is part of an archaeological site, upon finding that the application satisfies the following criteria, as applicable:

S - satisfies D - does not satisfy NA - not applicable

S	D	NA		
☒	☐	☐	(1)	The proposed activity must retain and preserve the historical character of the property;
☒	☐	☐	(2)	The proposed activity must contribute to the continued availability of the property for a contemporary use;
☒	☐	☐	(3)	The proposed activity must recognize the building, structure, object or site as a product of its own time and avoid alterations that seek to create an earlier or later appearance;
☒	☐	☐	(4)	The proposed activity must preserve the distinguishing qualities or character of the building, structure, object or site and its environment;
☒	☐	☐	(5)	The proposed activity must maintain or replicate distinctive stylistic exterior features or examples of skilled craftsmanship that characterize the building, structure, object or site;
☒	☐	☐	(6)	New materials to be used for any exterior feature excluding what is visible from public alleys must be visually compatible with, but not necessarily the same as, the materials being replaced in form, design, texture, dimension and scale;
☐	☐	☒	(7)	The proposed replacement of missing exterior features, if any, should be based on an accurate duplication of features, substantiated by available historical, physical or pictorial evidence, where that evidence is available, rather than on conjectural designs or the availability of different architectural elements from other structures;
☒	☐	☐	(8)	Proposed additions or alterations must be done in a manner that, if removed in the future, would leave unimpaired the essential form and integrity of the building, structure, object or site;
☒	☐	☐	(9)	The proposed design for any exterior alterations or addition must not destroy significant historical, architectural or cultural material and must be compatible with the size, scale, material and character of the property and the area in which it is located;
☐	☐	☒	(10)	The setback of any proposed construction or alteration must be compatible with existing setbacks along the blockface and facing blockface(s);
☐	☐	☒	(11)	The proposed activity will comply with any applicable deed restrictions.

DRAFT

Building Classification
- Contributing
- Non-Contributing
- Park

PROPERTY LOCATION

AIN STREET MARKET SQUARE HISTORIC DISTRICT

N

INVENTORY PHOTO

HISTORIC PHOTOS

PROPOSED REPLACEMENT OF SECOND AND THIRD STORY WINDOWS

PHOTOS PROVIDED BY APPLICANT

DAMAGE – CORROSION, BROKEN GLASS, WATER PENETRATION

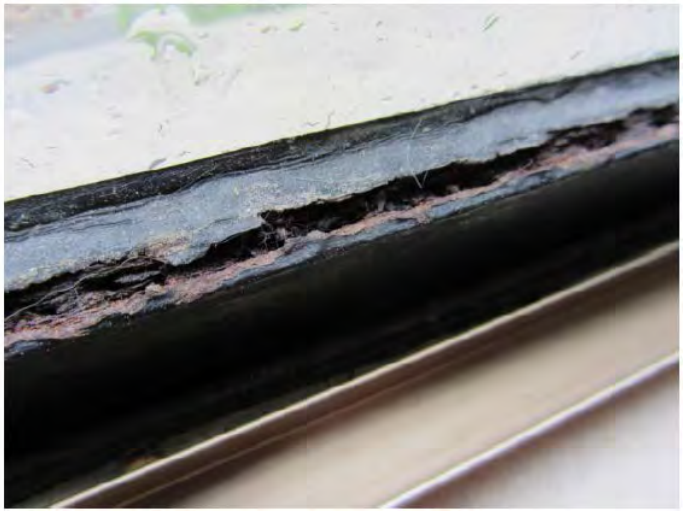

PHOTOS PROVIDED BY APPLICANT

DAMAGE – CORROSION, BROKEN GLASS, WATER PENETRATION

PHOTOS PROVIDED BY APPLICANT

DAMAGE – CORROSION, BROKEN GLASS, WATER PENETRATION

STAFF PHOTOS

DAMAGE – CORROSION, BROKEN GLASS, WATER PENETRATION

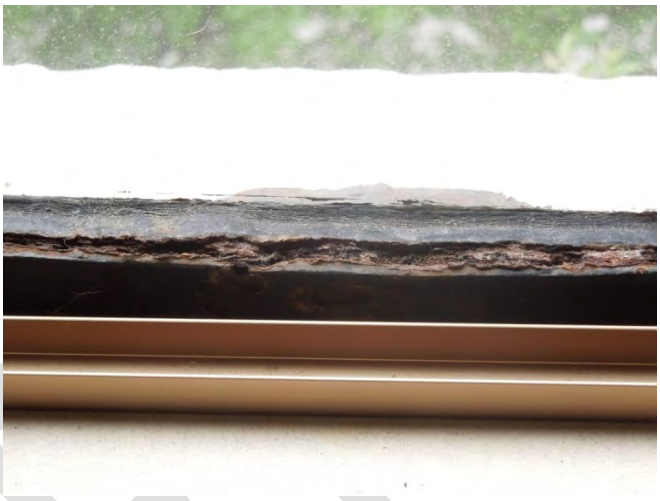

STAFF PHOTOS

DAMAGE – CORROSION, BROKEN GLASS, WATER PENETRATION

EXISTING AND PROPOSED WINDOW MUNTIN, MULLION & SASH DIMENSIONS

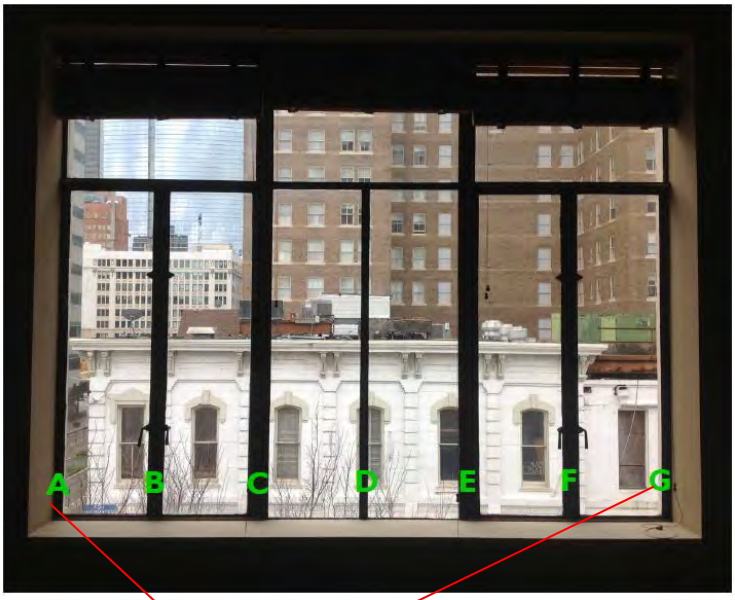

WINDOWS A & G

Original dimension –	2 1/16"	Difference: + 7/16
New dimension	2 1/2"	

WINDOWS B & F

Original dimension –	3 1/2"	Difference: + 3/4
New dimension	4 1/4"	

WINDOWS C & E

Original dimension –	4 7/16"	Difference: - 11/16
New dimension	3 3/4"	

WINDOW D

Original dimension –	1 5/8"	Difference: - 1/8
New dimension	1 1/2"	

WINDOW DETAILS - CASEMENT

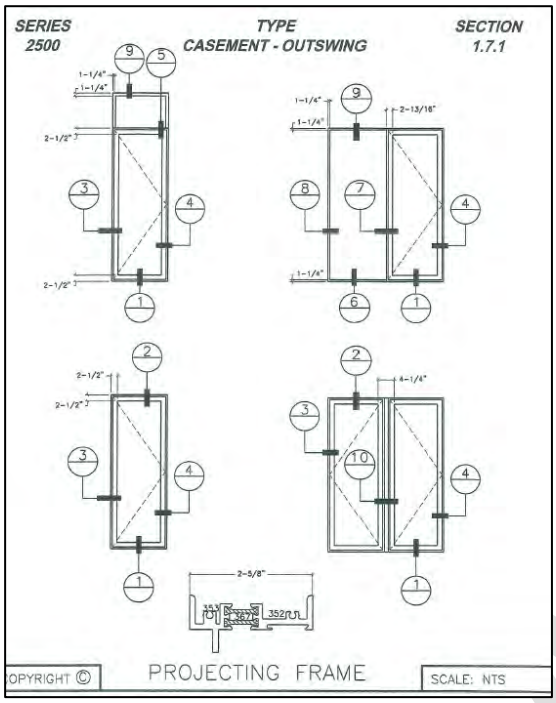

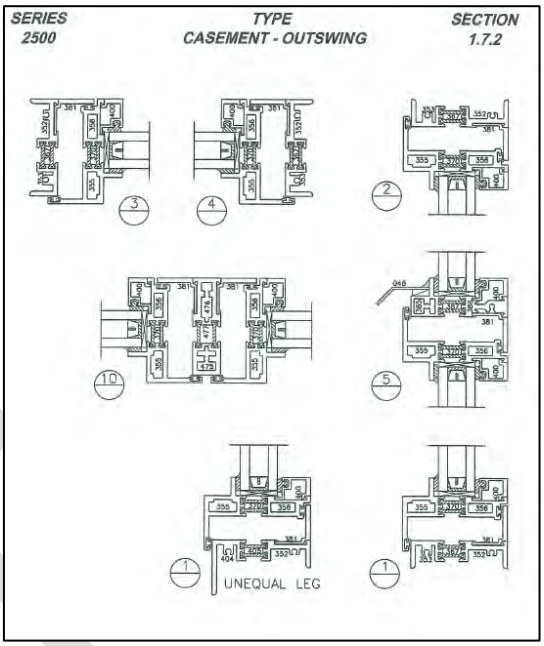

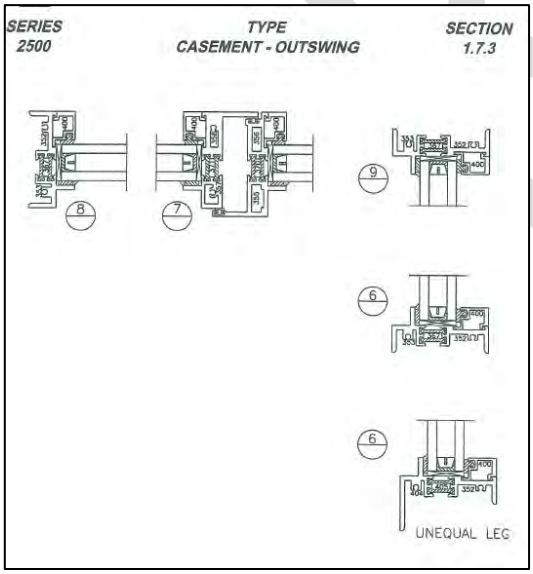

WINDOW DETAILS – FIXED

PROPOSED

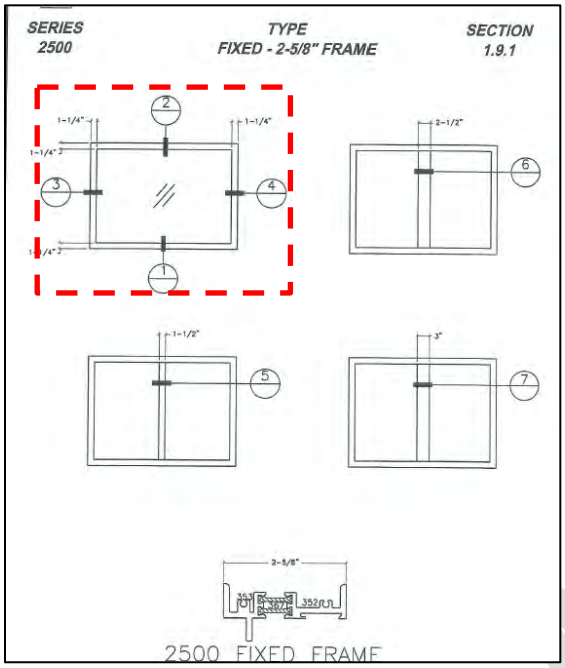

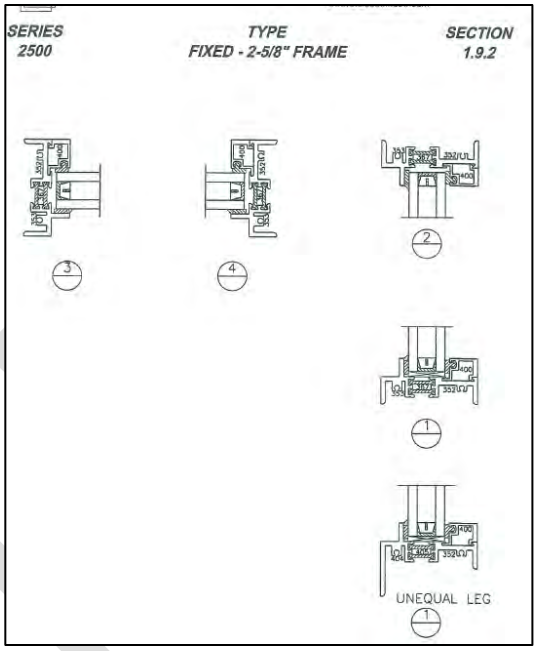

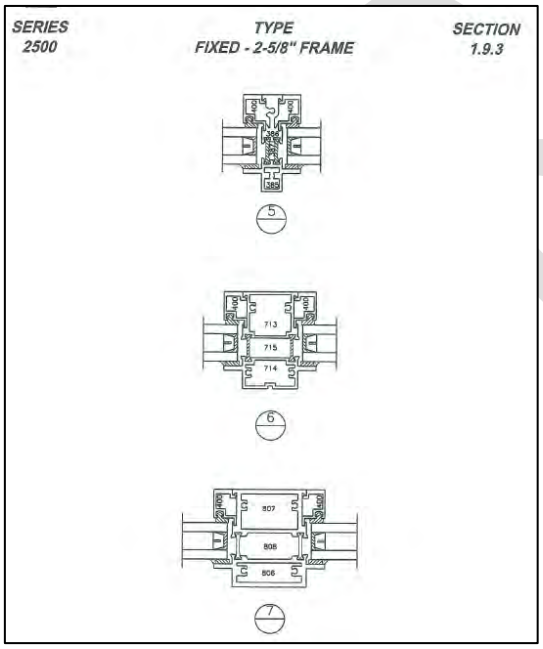

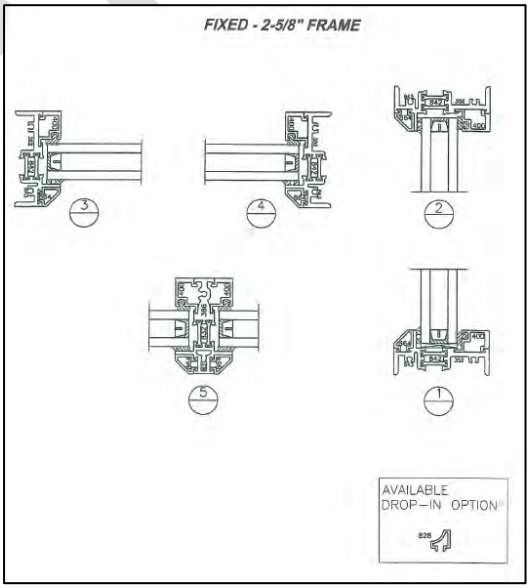

PROJECT DETAILS

Shape/Mass: The building has a five bay configuration facing Prairie St.; a two bay configuration facing Main St; and a corner bay. The windows are arranged in groupings of one double-casement window with transom; two pairs of double-casement with transom; or three pairs of double-casement with transom.

A single double-casement window measures 5'-6" tall by 3'-6" wide and a fixed transom window measures 2'-6" tall by 3'-6" wide, with an overall size of 7' wide by 8' tall per set.

Three pairs measure 8' tall by 10' - 6" wide. This system has two casement windows on the sides and a fixed center pair of windows.

Windows/Doors: The existing windows are steel double-casement and fixed transom windows. The replacement windows are aluminum custom-made double-casement and fixed transom windows. Replacement windows match the lite configuration and existing openings; the mullions, muntins and sashes will be slightly larger than the original to accommodate code requirements. Replacement windows will be installed from the interior.

Front Elevation: (East) The existing Main St. façade has two bays of three pairs of windows, two double-casement windows and one fixed pair of windows at the second and third levels that will be replaced.

Corner Elevation: (Southeast) The existing corner façade has one bay with one steel double-casement window at the second and third levels that will be replaced.

Side Elevation: (South) The existing Prairie St. façade has five bays of steel windows on the second and third levels. The side bays have two double-casement windows and the three center bays have three units, two double-casement windows and one fixed pair of windows to be replaced.

DRAFT