NOTES:

1. ALL EXISTING SIGNING AND MARKINGS NOT IN CONFLICT WITH PROPOSED ROADWAY AND TRAFFIC WILL REMAIN IN PLACE. SIGNING IN CONFLICT WITH PROPOSED ROADWAY SHALL BE REMOVED AND DELIVERED TO THE CITY OF HOUSTON SIGN SHOP.
2. ALL PROPOSED SIGNS AND POSTS SHALL BE FURNISHED AND INSTALLED IN ACCORDANCE WITH CITY OF HOUSTON SPECIFICATION SECTION 01554S. ALL PROPOSED SIGNS AND POSTS WITHIN TXDOT ROW SHALL BE FURNISHED AND INSTALLED IN ACCORDANCE WITH TXDOT STANDARDS AND SPECIFICATIONS.
3. SEE SHEET CD9-0016 FOR TRAFFIC BUTTON LOCATIONS AND DETAILS.
4. ALL PAVEMENT MARKINGS WITHIN TXDOT ROW SHALL BE IN ACCORDANCE WITH TXDOT STANDARDS AND SPECIFICATIONS. ALL PAVEMENT MARKINGS WITHIN COH ROW SHALL BE IN ACCORDANCE WITH COH STANDARDS AND SPECIFICATIONS.

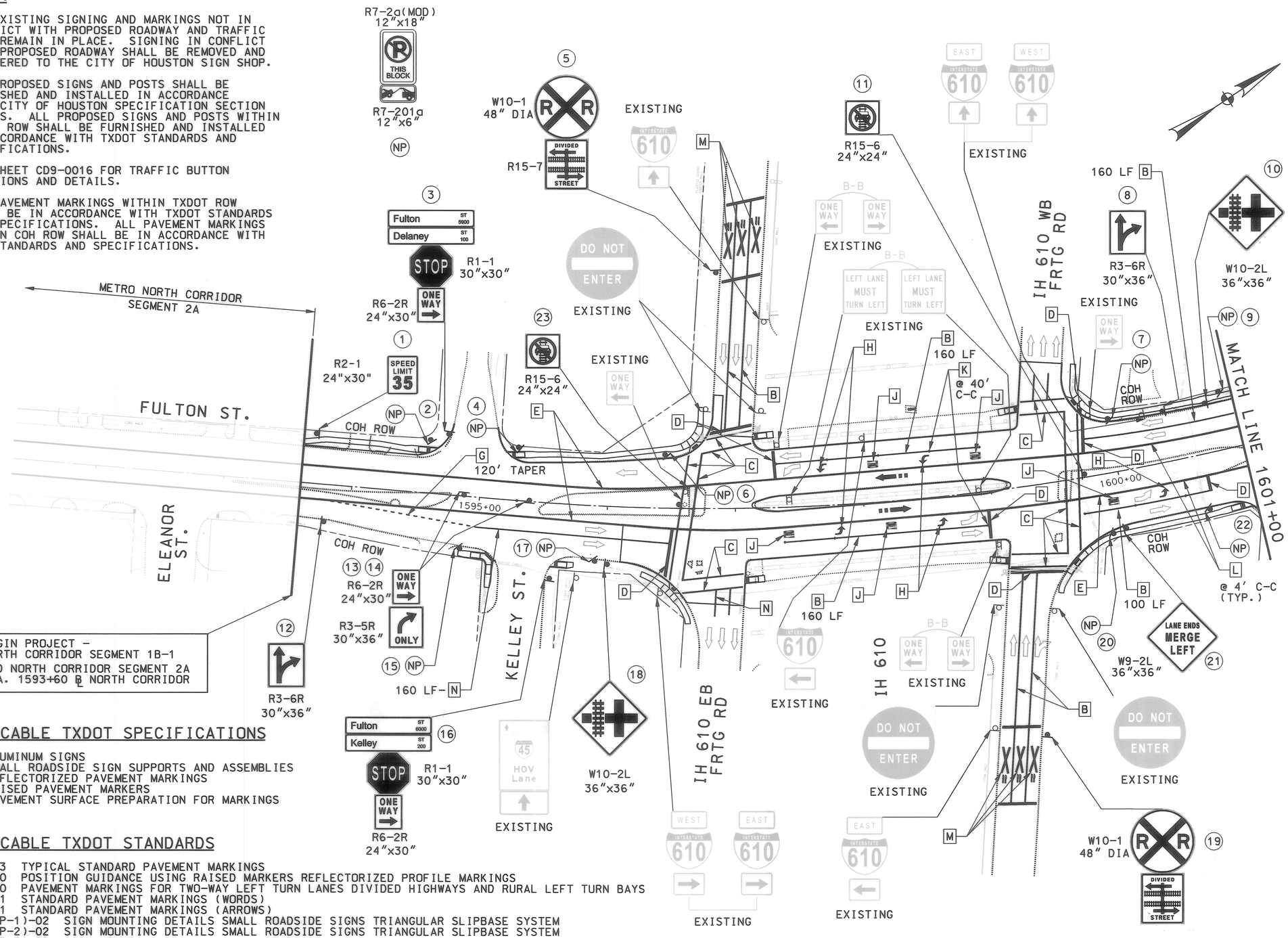

LEGEND

- A PAV MARK WHITE 4" BROKEN
- B PAV MARK WHITE 8" SOLID
- C PAV MARK WHITE 12" SOLID
- D PAV MARK WHITE 24" SOLID
- E PAV MARK YELLOW 4" SOLID
- F PAV MARK YELLOW 24" SOLID
- G PAV MARK WHITE 4" CAT-TRAC
- H PAV MARK - ARROW
- J PAV MARK "ONLY" WORD
- K TY II C-R MARKER
- L 10" WHITE CONCRETE BUTTONS
- M PAV MARK RR XING
- N PAV MARK WHITE 4" SOLID
- P YIELD TRIANGLE (18IN)
- Q PAV MRK - BIKE ARROW
- R PAV MRK - BIKE SYMBOL
- S PAV MRK - BIKE DIAMOND
- T PAV MRK YELLOW 12" SOLID
- U PAV MARK YELLOW 4" CAT-TRAC
- W PAV MARK WHITE MEDIAN CURB
- Y PAV MARK YELLOW MEDIAN CURB
- (#) PROPOSED SMALL SIGN
- TRAFFIC FLOW ARROW
- LRT FLOW ARROW
- EXISTING SIGN TO REMAIN
- PROPOSED SIGN

SCALE (IN FEET)
0 20 40 80

APPLICABLE TXDOT SPECIFICATIONS

636 ALUMINUM SIGNS
644 SMALL ROADSIDE SIGN SUPPORTS AND ASSEMBLIES
666 REFLECTORIZED PAVEMENT MARKINGS
672 RAISED PAVEMENT MARKERS
678 PAVEMENT SURFACE PREPARATION FOR MARKINGS

APPLICABLE TXDOT STANDARDS

PM(1)-03 TYPICAL STANDARD PAVEMENT MARKINGS
PM(2)-10 POSITION GUIDANCE USING RAISED MARKERS REFLECTORIZED PROFILE MARKINGS
PM(4)-10 PAVEMENT MARKINGS FOR TWO-WAY LEFT TURN LANES DIVIDED HIGHWAYS AND RURAL LEFT TURN BAYS
PM(5)-01 STANDARD PAVEMENT MARKINGS (WORDS)
PM(6)-01 STANDARD PAVEMENT MARKINGS (ARROWS)
SMD(SLIP-1)-02 SIGN MOUNTING DETAILS SMALL ROADSIDE SIGNS TRIANGULAR SLIPBASE SYSTEM
SMD(SLIP-2)-02 SIGN MOUNTING DETAILS SMALL ROADSIDE SIGNS TRIANGULAR SLIPBASE SYSTEM
SMD(SLIP-3)-02 SIGN MOUNTING DETAILS SMALL ROADSIDE SIGNS TRIANGULAR SLIPBASE SYSTEM

CITY OF HOUSTON
DEPARTMENT OF PUBLIC WORKS AND ENGINEERING
CITY OF HOUSTON DWG NO:
ACCEPTED AND FILED 47063 CITY DRAWING NUMBER HOUSTON, TEXAS
CONTRACT SHEET No. 72 OF 276

REV	DATE	DESCRIPTION	ADD	AMD	CCR	BY	ENG	CHK	APP

TEDSI INFRASTRUCTURE GROUP
Consulting Engineers
10260 Westheimer Rd., Suite 460
Houston, Texas 77042
(713) 975-8337
TEDSI TBPE F-1640

STATE OF TEXAS
ZAMEER AHMED
83201
LICENSED PROFESSIONAL ENGINEER
4/28/10

DANNENBAUM
ENGINEERING COMPANY - HOUSTON, LLC
T.B.P.E. FIRM REGISTRATION #8998
3100 WEST ALABAMA HOUSTON, TEXAS 77098 (713) 520-9570

HRT
HOUSTON RAPID TRANSIT JV
METRO Solutions
Metropolitan Transit Authority of Harris County, Texas

SC	4/28/2010
DRN BY PFE	DATE 4/28/2010
DRN CKD BY SC	DATE 4/28/2010
DES BY PFE	DATE 4/28/2010
DES CKD BY ZA	DATE 4/28/2010
APPROVED BY	DATE
SCALE: 1"=40'	

METRO SOLUTIONS NORTH CORRIDOR - SEGMENT IB-1

SIGNING AND PAVEMENT MARKINGS BEGIN PROJECT TO STA 1601+00

CONTRACT NO. 0800120 DRAWING NO. WM3-0008 REV.

RELEASED FOR CONSTRUCTION JUN 03 2010

pt\2008\28994 - metro north corridor phase 2\cadd\segment 1b and 3b\traffic\MSNCSPM08b-1B1.dgn 4/28/2010

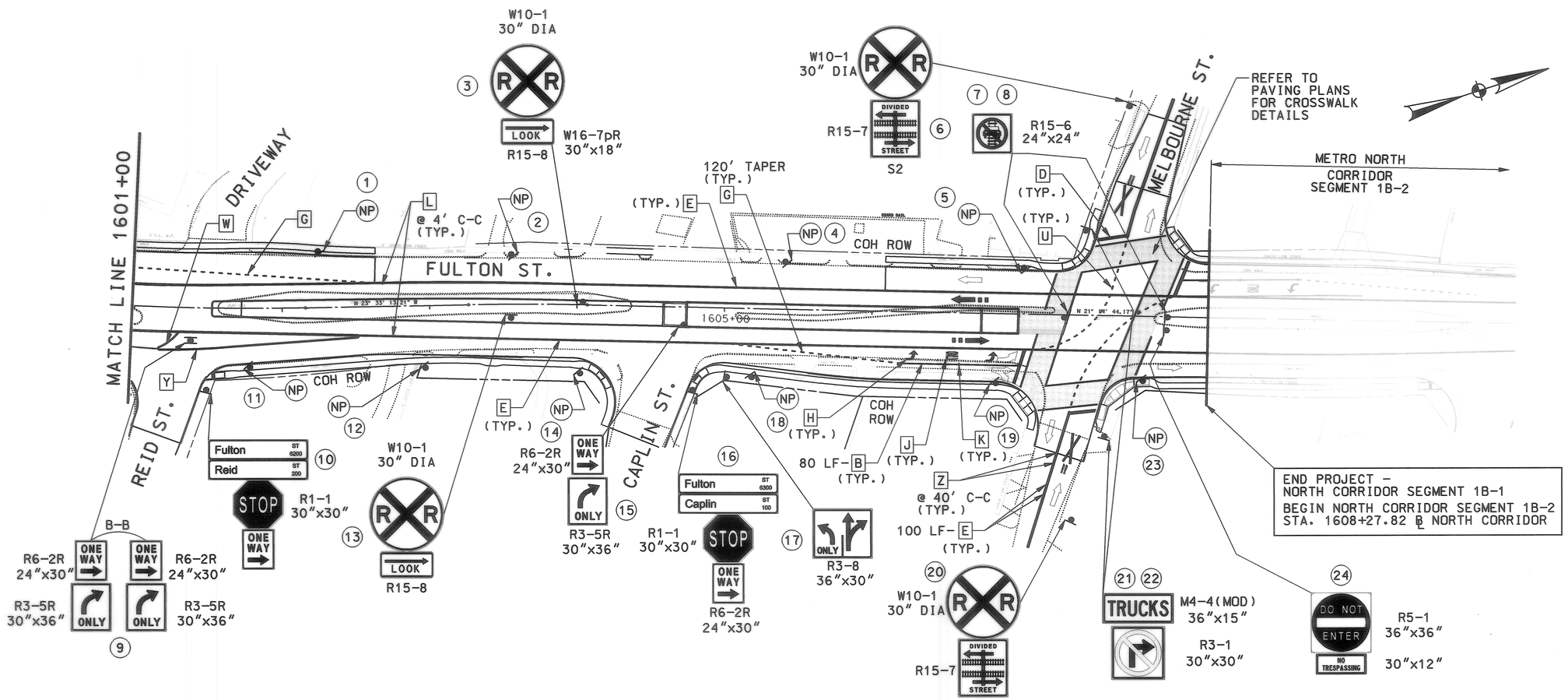

LEGEND

- A PAV MARK WHITE 4" BROKEN
- B PAV MARK WHITE 8" SOLID
- C PAV MARK WHITE 12" SOLID
- D PAV MARK WHITE 24" SOLID
- E PAV MARK YELLOW 4" SOLID
- F PAV MARK YELLOW 24" SOLID
- G PAV MARK WHITE 4" CAT-TRAC
- H PAV MARK - ARROW
- J PAV MARK "ONLY" WORD
- K TY II C-R MARKER
- L 10" WHITE CONCRETE BUTTONS
- M PAV MARK RR XING
- N PAV MARK WHITE 4" SOLID
- P YIELD TRIANGLE (18IN)
- Q PAV MRK - BIKE ARROW
- R PAV MRK - BIKE SYMBOL
- S PAV MRK - BIKE DIAMOND
- T PAV MRK YELLOW 12" SOLID
- U PAV MARK YELLOW 4" CAT-TRAC
- W PAV MARK WHITE MEDIAN CURB
- Y PAV MARK YELLOW MEDIAN CURB
- Z TY II A-A MARKER
- (#) PROPOSED SMALL SIGN
- TRAFFIC FLOW ARROW
- LRT FLOW ARROW
- SIGN

NOTES:

1. ALL EXISTING SIGNING AND MARKINGS NOT IN CONFLICT WITH PROPOSED ROADWAY AND TRAFFIC WILL REMAIN IN PLACE. SIGNING IN CONFLICT WITH PROPOSED ROADWAY SHALL BE REMOVED AND DELIVERED TO THE CITY OF HOUSTON SIGN SHOP.
2. ALL PROPOSED SIGNS AND POSTS SHALL BE FURNISHED AND INSTALLED IN ACCORDANCE WITH CITY OF HOUSTON SPECIFICATION SECTION 01554S.
3. SEE SHEET CD9-0016 FOR TRAFFIC BUTTON LOCATIONS AND DETAILS.
4. ALL PAVEMENT MARKINGS SHALL BE IN ACCORDANCE WITH CITY OF HOUSTON STANDARD DETAILS AND SPECIFICATIONS.

R7-2a(MOD)
12"x18"
THIS BLOCK
R7-201a
12"x6"
(NP)

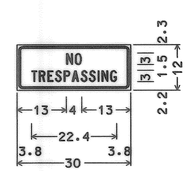

1.5" Radius, 0.6" Border,
0.4" Indent, Black on White;
[NO] C;
[TRESPASSING] C;

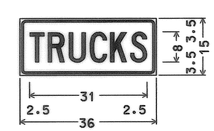

1.5" Radius, 0.6" Border,
0.4" Indent, Black on White;
[TRUCKS] C 70% spacing;

SCALE (IN FEET)
0 20 40 80

CITY OF HOUSTON
DEPARTMENT OF PUBLIC WORKS AND ENGINEERING
CITY OF HOUSTON DWG NO:
ACCEPTED AND FILED
47063
CITY DRAWING NUMBER
HOUSTON, TEXAS

CONTRACT SHEET No. 73 OF 276

REV	DATE	DESCRIPTION	ADD	AMD	CCR	BY	ENG	CHK	APP

TEDSI INFRASTRUCTURE GROUP
Consulting Engineers
10260 Westheimer Rd., Suite 460
Houston, Texas 77042
(713) 975-8337
TBPE F-1640

STATE OF TEXAS
ZAMEER AHMED
83201
LICENSED PROFESSIONAL ENGINEER
3/5/10

DANNENBAUM
ENGINEERING COMPANY - HOUSTON, LLC
T.B.P.E. FIRM REGISTRATION #8998
3100 WEST ALABAMA HOUSTON, TEXAS 77098 (713) 520-9570

HRT HOUSTON RAPID TRANSIT JV
METRO Solutions
Metropolitan Transit Authority of Harris County, Texas

SC	3/4/2010
DRN BY PFE	DATE 3/4/2010
DRN CKD BY SC	DATE 3/4/2010
DES BY PFE	DATE 3/4/2010
DES CKD BY ZA	DATE 3/4/2010
APPROVED BY	DATE
SCALE: 1"=40'	

METRO SOLUTIONS NORTH CORRIDOR - SEGMENT IB-1

SIGNING AND
PAVEMENT MARKINGS
STA 1601+00 TO STA 1618+00

CONTRACT NO. 0800120 | DRAWING NO. WM3-0009 | REV.

RELEASED FOR CONSTRUCTION JUN 03 2010

pt\2008\28994 - metro north corridor phase 2\cadd\segment 1b and 3b\traffic\MSNCSPM09-1B1.dgn
3/4/2010