ENGINEERING CORP.

GEOTECHNICAL INVESTIGATION

CITY OF HOUSTON
SURFACE WATER TRANSMISSION PROGRAM
CONTRACT 74A-1 WATERLINE
COH WBS NO. S-000900-0109-3
HOUSTON, TEXAS

Reported To:
LAN, Inc.
Houston, Texas

by

Aviles Engineering Corporation
5790 Windfern
Houston, Texas 77041
713-895-7645

REPORT NO. G137-10

December 2010

AVILES ENGINEERING CORP.

TABLE OF CONTENTS

AVILES ENGINEERING CORP.

APPENDICES

APPENDIX A

APPENDIX B

APPENDIX C

APPENDIX D

ENGINEERING CORP.

EXECUTIVE SUMMARY

The report submitted herein presents the results of Aviles Engineering Corporation's (AEC) geotechnical investigation for the City of Houston's (COH) proposed Surface Water Transmission Program (SWTP) Contract 74A-1 waterline, in Houston, Texas. Based on plan and profile drawings provided to AEC, the project includes: (i) approximately 7,330 linear feet of 42- and 48-inch waterlines will be installed primarily by open cut method; (ii) portions of the waterline that cross under the Fort Bend County Toll Road and under Sims Bayou (Harris County Flood Control District Unit C156-00-00) will be installed by tunnel method; (ii) approximately 3,620 linear feet of 8- and 12-inch waterlines will be installed primarily by auger method; and (iii) reconstruction of the portions of Coach Creek Drive, Wood River Drive, River Bluff Drive, and Summit Ridge Drive where the waterline trenches will be located in existing roadways. The 42- and 48-inch diameter waterline invert depth typically varies from 12 to 15 feet below grade, although the invert depth increases to 18 to 23 feet at utility, ditch, and roadway crossings.

1. Subsurface Soil Conditions: Based on Borings B-1 through B-5, the subsurface conditions along the alignment between Sims Bayou Water Treatment Plant No. 1 and Sims Bayou Pump Station No. 2 consists of approximately 4 to 12 feet of stiff to hard sandy clay (CL/CH) fill and 2 feet of clayey sand (SC) fill in Boring B-1 at the existing ground surface, underlain by approximately 17 to 23 feet of firm to hard of sandy lean clay (CL) and fat clay (CH) to the boring termination depths of 25 to 30 feet below grade. Approximately 3 to 7 feet of medium dense to very dense silty sand (SM) was encountered at a depth of approximately 22 to 27 feet below grade in Borings B-1, B-2, and B-5.

   Based on Borings B-6 and B-6A, the subsurface conditions along the alignment that crosses under Sims Bayou generally consists of approximately 2 to 4 feet of hard lean/fat clay (CL/CH) fill at the existing ground surface, underlain by alternating layers of approximately 6 to 8 foot thick strata of clayey sand (SC) and approximately 4 to 9 foot thick layers of very stiff to hard sandy clay (CL) to the boring termination depth of 35 to 40 feet below existing grade.

   Based on Borings B-7 and B-7A, the subsurface conditions along the alignment that crosses under the Fort Bend County Toll Road generally consists of approximately 4 feet of lean/fat clay fill (CL/CH), underlain by approximately 20 to 21 feet of firm to hard sandy clay (CL/CH), followed by approximately 4 feet of very stiff clayey silt (ML), then approximately 7 feet of very stiff to hard sandy clay (CL) to the boring termination depth of 25 to 35 feet below existing grade.

   Based on Borings B-8 through B-12, the subsurface conditions along the alignment between Chimney Rock Drive to Hillcroft Drive generally consists of stiff to very stiff sandy clay (CL/CH) from the existing ground surface to the boring termination depth of 25 to 30 feet below existing grade. Approximately 10 feet of loose clayey sand (SC) was encountered at a depth of 8 feet below grade in Boring B-8, and approximately 12 feet of silty clayey sand/clayey sand (SC-SM/SC) was encountered at a depth of 10 feet below grade in Boring B-12.

2. Subsurface Soil Properties: The subsurface clayey soils have moderate to very high plasticity, with liquid limits (LL) ranging from 23 to 72, and plasticity indices (PI) ranging from 9 to 54. The cohesive soils encountered are classified as "CL" and "CH" type soils in accordance with the Unified Soil Classification System (USCS). Granular soils were classified as "SM", "SC", and "SC-SM" according to the USCS.

EXECUTIVE SUMMARY (cont.)

3. Groundwater Conditions: Groundwater was encountered at a depth of 17 to 28 feet below grade during drilling and was subsequently observed at a depth of 11 to 21.5 feet approximately 15 minutes after the initial encounter in Borings B-1 through B-7. Groundwater was not encountered in Borings B-8 through B-12. Groundwater levels encountered during drilling and in the piezometers are summarized in Section 4.1 of this report. AEC notes the groundwater depths will fluctuate depending on seasonal rainfall and other climatic events. AEC recommends that the Contractor verify groundwater depths and seepage rates before starting work, and determine where (i) dewatering is required and (ii) groundwater is pressurized.

4. Geologic Hazards: We were unable to find any literature or public maps documenting faults along the project alignment.

5. Hazardous Materials: No signs of visual staining or odors were encountered during field drilling or during processing of the soil samples in the laboratory.

6. Design parameters and recommendations for installation of waterlines by open cut, auger, and tunnel methods are presented in Sections 5.2 through 5.4, respectively.

7. Design parameters and recommendations for concrete roadway pavement reconstruction are presented in Section 5.5.

This Executive Summary is intended as a summary of the investigation and should not be used without the full text of this report.

ENGINEERING CORP.

GEOTECHNICAL INVESTIGATION

CITY OF HOUSTON
SURFACE WATER TRANSMISSION PROGRAM
CONTRACT 74A-1 WATERLINE
COH WBS NO. S-000900-0109-3
HOUSTON, TEXAS

1.0 INTRODUCTION

1.1 General

The report submitted herein presents the results of Aviles Engineering Corporation's (AEC) geotechnical investigation for the City of Houston's (COH) proposed Surface Water Transmission Program (SWTP) Contract 74A-1 waterline, in Houston, Texas (Houston Key Map 571J, K, and P). A vicinity map is presented on Plate A-1, in Appendix A. Based on plan and profile drawings provided to AEC, the project includes: (i) approximately 7,330 linear feet of 42- and 48-inch waterlines will be installed primarily by open cut method; (ii) portions of the waterline that cross under the Fort Bend County Toll Road and under Sims Bayou (Harris County Flood Control District Unit C156-00-00) will be installed by tunnel method; (iii) approximately 3,620 linear feet of 8- and 12-inch waterlines will be installed primarily by auger method; and (iv) reconstruction of the portions of Coach Creek Drive, Wood River Drive, River Bluff Drive, and Summit Ridge Drive where the waterline trenches will be located in existing roadways. The 42- and 48-inch diameter waterline invert depth typically varies from 12 to 15 feet below grade, although the invert depth increases to 18 to 23 feet at utility, ditch, and roadway crossings.

1.2 Authorization

The geotechnical investigation was authorized on June 11, 2010 by Lockwood, Andrews, and Newnam, Inc. (LAN) via Task Order 8 2 9/2, based on AEC's proposal G2010-04-02R dated June 7, 2010.

1.3 Purpose and Scope

The purpose of this geotechnical investigation is to evaluate the subsurface soil conditions along the alignment and develop geotechnical engineering recommendations for design and construction of waterlines by open cut, auger, and tunnel methods, as well as residential street reconstruction, including

pavement thickness and subgrade preparation. The scope of this geotechnical investigation is summarized below:

1. Drilling and sampling 14 geotechnical borings, ranging from 25 to 40 feet below existing grade;
2. Soil laboratory testing on selected soil samples;
3. Engineering analyses and recommendations for the installation of waterlines by open cut method, including loadings on pipes, bedding, lateral earth pressure parameters, trench stability, and backfill requirements;
4. Engineering analyses and recommendations for the installation of waterlines by auger method, including loadings on pipes, auger pit excavation, shoring, and backfill;
5. Engineering analyses and recommendations for the installation of waterlines by tunnel method, including tunnel access shafts, reaction walls, and tunnel stability;
6. Engineering analyses and recommendations for the design of rigid pavement, including pavement thickness and subgrade preparation;
7. Construction recommendations for installation of waterlines by open cut, auger, and tunnel methods, as well as rigid pavements.

2.0 SUBSURFACE EXPLORATION

2.1 Soil Borings

As requested by LAN, the boring layout and depths were performed in accordance with Chapter 7 of the 2001 COH SWTP Design Manual. The initial subsurface exploration consisted of drilling and sampling a total of twelve soil borings ranging from 25 to 35 feet below existing grade; afterwards, two additional tunnel borings were added to the scope of service and were drilled to depths ranging from 35 to 40 feet. The boring locations are shown on the Boring Location Plan on Plate A-2, in Appendix A. Total drilling footage is 410 feet. The boring designations and depths and corresponding waterline invert depths are presented in Table 1 below.

Table 1. Boring Number, Station, and Depth

Boring No.	Boring Depth (ft)	Station No.	Invert Depth near Boring (ft)	Piezometer Depth (ft)
B-1	30	74+45(1)	18.5	--
B-2 (PZ-1)	25	70+25(1)	12.5	20
B-3	25	64+80(1)	11.5	--
B-4	30	60+00(1)	17.5	--
B-5	30	55+05(1)	20	--

Boring No.	Boring Depth (ft)	Station No.	Invert Depth near Boring (ft)	Piezometer Depth (ft)
B-6 (PZ-2)	35	52+60(1)	23	25
B-6A	40	52+55(1)	23	--
B-7A	35	50+65(1)	15.5	
B-7	25	47+62.63	15.5	--
B-8	25	39+96.08	13	--
B-9	30	31+42.85	18.5	--
B-10	25	22+42.39	12	--
B-11 (PZ-3)	25	12+79.15	14.5	20
B-12	30	2+54.06	13	--

Note: (1) Boring locations are approximate.

Existing pavement at Borings B-8 through B-12 was first cut with a core barrel prior to field drilling. The field drilling was performed with both truck- and buggy-mounted drilling rigs primarily using dry auger method, wet rotary method was used once water-bearing granular soils were encountered or the borings began to cave in. Undisturbed samples of cohesive soils were obtained from the borings by pushing 3-inch diameter thin-wall, seamless steel Shelby tube samplers in general accordance with ASTM D 1587. Granular soils were sampled with a 2-inch split-barrel sampler in accordance with ASTM D 1586. Standard Penetration Test resistance (N) values were recorded for the granular soils as "Blows per Foot" and are shown on the boring logs. Strength of the cohesive soils was estimated in the field using a hand penetrometer. The undisturbed samples of cohesive soils were extruded mechanically from the core barrels in the field and wrapped in aluminum foil; all samples were sealed in plastic bags to reduce moisture loss and disturbance. The samples were then placed in core boxes and transported to the AEC laboratory for testing and further study. Bore holes located on pavement were grouted with cement-bentonite upon completion of drilling, while borings located off pavement were backfilled with bentonite chips, except for Borings B-2, B-6, and B-11 which were converted to piezometers. Existing pavement was patched with non-shrink grout.

3.0 LABORATORY TESTING PROGRAM

Soil laboratory testing was performed by AEC personnel. Samples from the borings were examined and classified in the laboratory by a technician under the supervision of a geotechnical engineer. Laboratory

tests were performed on selected soil samples in order to evaluate the engineering properties of the foundation soils in accordance with applicable ASTM Standards. Atterberg limits, moisture contents, percent passing a No. 200 sieve, and dry unit weight tests were performed on typical samples to establish the index properties and confirm field classification of the subsurface soils. Strength properties of cohesive soils were determined by means of unconfined compression (UC) and undrained-unconsolidated (UU) triaxial tests performed on undisturbed samples. The test results are presented on the boring logs. Details of the soils encountered in the borings are presented on Plates A-3 through A-14, in Appendix A. A key to the boring logs, classification of soils for engineering purposes, terms used on boring logs, and reference ASTM Standards for laboratory testing are presented on Plates A-15 through A-18, in Appendix A.

4.0 SITE CONDITIONS

A summary of existing pavement sections encountered in our borings is presented in Table 2 below.

Table 2. Existing Pavement Encountered at Pavement Borings

Boring No.	Street	Pavement Sections
B-8	River Bluff Drive	7.5” Concrete
B-9	River Bluff Drive	6” Concrete
B-10	River Bluff Drive	6” Concrete
B-11	Wood River Drive	5” Concrete
B-12	Coach Creek Drive	5” Concrete

4.1 Subsurface Conditions

A generalized subsurface profile along the waterline alignment is presented on Plates B-1 and B-2, in Appendix B.

Sims Bayou Water Treatment Plant No. 1 to Sims Bayou Pump Station No. 2: Based on Borings B-1 through B-5, the subsurface conditions along the alignment between Sims Bayou Water Treatment Plant No. 1 and Sims Bayou Pump Station No. 2 consists of approximately 4 to 12 feet of stiff to hard sandy clay (CL/CH) fill and approximately 2 feet of clayey sand (SC) fill in Boring B-1 at the existing ground surface, underlain by approximately 17 to 23 feet of firm to hard of sandy lean clay (CL) and fat clay (CH) to the

boring termination depths of 25 to 30 feet below grade. Approximately 3 to 7 feet of medium dense to very dense silty sand (SM) was encountered at a depth of approximately 22 to 27 feet below grade in Borings B-1, B-2, and B-5.

Sims Bayou Crossing: Based on Borings B-6 and B-6A, the subsurface conditions along the alignment that crosses under Sims Bayou generally consists of approximately 2 to 4 feet of hard lean/fat clay (CL/CH) fill at the existing ground surface, underlain by alternating layers of approximately 6 to 8 foot thick strata of clayey sand (SC) and approximately 4 to 9 foot thick layers of very stiff to hard sandy clay (CL) to the boring termination depth of 35 to 40 feet below existing grade.

Fort Bend County Toll Road Crossing: Based on Borings B-7 and B-7A, the subsurface conditions along the alignment that crosses under the Fort Bend County Toll Road generally consists of approximately 4 feet of lean/fat clay fill (CL/CH), underlain by approximately 20 to 21 feet of firm to hard sandy clay (CL/CH), followed by approximately 4 feet of very stiff clayey silt (ML), then approximately 7 feet of very stiff to hard sandy clay (CL) to the boring termination depth of 25 to 35 feet below existing grade.

Chimney Rock Drive to Hillcroft Drive: Based on Borings B-8 through B-12, the subsurface conditions along the alignment between Chimney Rock Drive to Hillcroft Drive generally consists of stiff to very stiff sandy clay (CL/CH) from the existing ground surface to the boring termination depth of 25 to 30 feet below existing grade. Approximately 10 feet of loose clayey sand (SC) was encountered at a depth of 8 feet below grade in Boring B-8, and approximately 12 feet of silty clayey sand/clayey sand (SC-SM/SC) was encountered at a depth of 10 feet below grade in Boring B-12.

Subsurface Soil Properties: The subsurface clayey soils have moderate to very high plasticity, with liquid limits (LL) ranging from 23 to 72, and plasticity indices (PI) ranging from 9 to 54. High plasticity clays can undergo significant volume changes due to seasonal changes in moisture contents. The cohesive soils encountered are classified as “CL” and “CH” type soils in accordance with the Unified Soil Classification System (USCS). “CH” soils undergo significant volume changes due to seasonal changes in soil moisture contents. “CL” type soils with lower LL (less than 40) and PI (less than 20) generally do not undergo significant volume changes with changes in moisture content. However, “CL” soils with LL approaching 50 and PI greater than 20 essentially behave as “CH” soils and could undergo significant volume changes. Slickensides were encountered in the fat clays. Granular soils were classified as “SM”, “SC”, and “SC-

SM" according to the USCS.

Groundwater: Groundwater was encountered at a depth of 17 to 28 feet below grade during drilling and was subsequently observed at a depth of 11 to 21.5 feet approximately 15 minutes after the initial encounter in Borings B-1 through B-7. Groundwater was not encountered in Borings B-8 through B-12. After completion of drilling, Borings B-2, B-6, and B-11 were converted to piezometers. Piezometer installation details are presented on Plates B-3 through B-5, in Appendix B. Detailed groundwater levels are summarized in Table 3.

Table 3. Groundwater Depths below Existing Ground Surface

Boring No.	Date Drilled	Boring Depth (ft)	Groundwater Depth Encountered during Drilling (ft)	Groundwater Depth 15 min. After Initial Encounter (ft)	Groundwater Depth in Piezometer (ft)
B-1	7/15/10	25	21	14	--
B-2 (PZ-1)	7/15/10	25	18	13.1	13.8 (7/30/10) 16.1 (9/22/10) 17.6 (12/1/10)
B-3	7/15/10	25	22	11	--
B-4	7/15/10	30	22	13.3	--
B-5	7/15/10	30	17	12	--
B-6 (PZ-2)	8/19/10	35	25	11.6	15.0 (8/20/10) 13.4 (9/22/10) 14.1 (12/1/10)
B-6A	9/28/10	40	28	16.7	--
B-7A	9/28/10	35	25	21.5	--
B-7	8/19/10	25	25	14.5	--
B-8	6/25/10	25	Dry	Dry	--
B-9	6/25/10	30	Dry	Dry	--
B-10	6/30/10	25	Dry	Dry	--
B-11 (PZ-3)	6/25/10	25	Dry	Dry	17.3 (6/29/10) 6.1 (7/30/10) 7.2 (9/22/10) 7.3 (12/1/10)
B-12	6/25/10	25	Dry	Dry	--

The information in this report summarizes conditions found on the dates the borings were drilled. It should be noted that our groundwater observations are short-term; groundwater depths and subsurface soil moisture contents will vary with environmental variations such as frequency and magnitude of rainfall and the time of year when construction is in progress.

4.2 Geologic Faults

AEC performed a Phase I fault investigation which included a review of available literature, public maps and aerial photographs. According to 'Principal Active Faults, Houston Area, Texas', by O'Neill and Van Siclen (1984), the Fuqua fault is located approximately 1.5 miles southeast of the project alignment. Evidence of faulting was not observed on aerial photographs of the project alignment.

Faults may exist in the project site or surrounding area which were not mentioned in the literature searched or observable on the aerial photographs due to limitations of the scope of work and cost; the angle and time of day the aerial photographs were taken: the presence of obscuring vegetation and cultural features; and modification of the land surface by human activities. Faults may also be present at depths which do not currently have surface expressions. Identification of these faults is beyond the scope of work for this project.

4.3 Hazardous Materials

No signs of visual staining or odors were encountered during field drilling or during processing of the soil samples in the laboratory.

4.4 Subsurface Variations

It should be emphasized that: (i) at any given time, groundwater depths can vary from location to location, and (ii) at any given location, groundwater depths can change with time. Groundwater depths will vary with seasonal rainfall and other climatic/environmental events. Subsurface conditions may vary away between the boring locations.

Clay soils in the Houston area typically have secondary features such as slickensides and contain sand/silt seams/lenses/layers/pockets. It should be noted that the information in the boring logs is based on 3-inch diameter soil samples which were generally obtained at intervals of 2 feet in the top 10 feet of the borings in Borings B-13, B-14, and B-17 through B-22, and in the top 30 feet of the borings in Borings B-6A and B-7A, then at intervals of 5 feet thereafter to the boring termination depths. A detailed description of the soil secondary features may not have been obtained due to the small sample size and sampling interval between the samples. Therefore, while a boring log shows some soil secondary features, it should not be assumed that the features are absent where not indicated on the boring logs.

5.0 GEOTECHNICAL ENGINEERING RECOMMENDATIONS

Based on 70 percent complete plan and profile drawings provided by LAN, the project includes: (i) approximately 7,330 linear feet of 42- and 48-inch waterlines will be installed primarily by open cut method; (ii) portions of the waterline that cross under the Fort Bend County Toll Road and under Sims Bayou (Harris County Flood Control District Unit C156-00-00) will be installed by tunnel method; (iii) approximately 3,620 linear feet of 8- and 12-inch waterlines will be installed primarily by auger method; and (iv) reconstruction of the portions of Coach Creek Drive, Wood River Drive, River Bluff Drive, and Summit Ridge Drive where the waterline trenches will be located on existing pavement. The 42- amd 48-inch diameter waterline invert depth typically varies from 12 to 15 feet below grade, although the invert depth increases to 18 to 23 feet at utility, ditch, and roadway crossings.

5.1 Geotechnical Parameters for Underground Utilities

Recommended geotechnical parameters for the subsurface soils along the alignment to be used for design of waterlines are presented on Plates C-1a through C-1d, in Appendix C. The design values are based on the results of field and laboratory test data on individual boring logs as well as our experience. It should be noted that because of the variable nature of soil stratigraphy, soil types and properties along the alignment or at locations away from a particular boring may vary substantially.

5.2 Installation of Waterlines by Open-Cut Method

Waterlines installed by open-cut methods should be designed and installed in accordance with Section

02317 of the 2009 City of Houston Standard Construction Specifications (COHSCS).

5.2.1 Loadings on Pipes

Underground utilities support the weight of the soil and water above the crown, as well as roadway traffic and any structures that exist above the utilities.

Earth Loads: For underground utilities to be installed using open cut methods, the vertical soil load W_e can be calculated as the larger of the two values from Equations (1) and (3):

$$W_e = C_d \gamma B_d^2 \quad \text{.....Equation (1)}$$

$$C_d = [1 - e^{-2K\mu'(H/B_d)}]/(2K\mu') \quad \text{.....Equation (2)}$$

$$W_e = \gamma B_c H \quad \text{.....Equation (3)}$$

where:
- W_e = trench fill load, in pounds per linear foot (lb/ft);
- C_d = trench load coefficient, see Plate C-2, in Appendix C;
- γ = effective unit weight of soil over the conduit, in pounds per cubic foot (pcf);
- B_d = trench width at top of the conduit < 1.5 B_c (ft);
- B_c = outside diameter of the conduit (ft);
- H = variable height of fill (ft);
  when the height of fill above the top of the conduit H_c.>2 B_d, $H = H_h$ (height of fill above the middle of the conduit). When $H_c < 2\ B_d$, H varies over the height of the conduit; and
- $K\mu'$ = 0.1650 maximum for sand and gravel,
  0.1500 maximum for saturated top soil,
  0.1300 maximum for ordinary clay,
  0.1100 maximum for saturated clay.

When underground conduits are located below groundwater, the total vertical dead loads should include the weight of the projected volume of water above the conduits.

Traffic Loads: The vertical stress on top of an underground conduit, p_L (psf), resulting from traffic loads (from a H-20 or HS-20 truck) can be obtained from Plate C-3, in Appendix C. The live load on top of the underground conduit can be calculated from Equation (4):

$$W_L = p_L B_c \quad \text{.....Equation (4)}$$

where: W_L = live load on the top of the conduit (lb/ft);
p_L = vertical stress (on the top of the conduit) resulting from traffic loads (psf);
B_c = outside diameter of the conduit, (ft);

Lateral Loads: The lateral soil pressure p_l can be calculated from Equation (5); hydrostatic pressure should be added, if applicable.

$$p_l = 0.5\,(\gamma H_h + p_s) \qquad \text{.....Equation (5)}$$

where: H_h = height of fill above the center of the conduit (ft);
γ = effective unit weight of soil over the conduit (pcf);
p_s = vertical pressure on conduit resulting from traffic and/or construction equipment (psf).

5.2.2 Trench Stability

Cohesive soils in the Houston area contain many secondary features which affect trench stability, including sand seams and slickensides. Slickensides are shiny weak failure planes which are commonly present in fat clays; such clays often fail along these weak planes when they are not laterally supported, such as in an open excavation. The Contractor should not assume that slickensides and sand seams/layers/pockets are absent where not indicated on the logs.

The Contractor should be responsible for designing, constructing and maintaining safe excavations. The excavations should not cause any distress to existing structures.

Trenches 20 feet and Deeper: OSHA requires that shoring or bracing for trenches 20 feet and deeper be specifically designed by a licensed professional engineer.

Trenches Less than 20 Feet Deep: Trench excavations that are less than 20 feet deep may be shored, sheeted and braced, or laid back to a stable slope for the safety of workers, the general public, and adjacent structures, except for excavations which are less than 5 feet deep and verified by a competent person to have no cave-in potential. The excavation and trenching should be in accordance with Occupational Safety and Health Administration (OSHA), Safety and Health Regulations, 29 CFR, Part 1926. Recommended OSHA soil types for trench design for existing soils can be found on Plates C-1a through C-1d, in Appendix C. Fill soils are considered OSHA Class ‘C’; submerged cohesive soils should also be considered OSHA Class ‘C’, unless they are dewatered first.

Critical Height is defined as the height a slope will stand unsupported for a short time; in cohesive soils, it is used to estimate the maximum depth of open-cuts at given side slopes. Critical Height may be calculated based on the soil cohesion. Values for various slopes and cohesion are shown on Plate D-1, in Appendix D.

Cautions listed below should be exercised in use of Critical Height applications:

1. No more than 50 percent of the Critical Height computed should be used for vertical slopes. Unsupported vertical slopes are not recommended where granular soils or soils that will slough when not laterally supported are encountered within the excavation depth.

2. If the soil at the surface is dry to the point where tension cracks occur, any water in the crack will increase the lateral pressure considerably. In addition, if tension cracks occur, no cohesion should be assumed for the soils within the depth of the crack. The depth of the first waler should not exceed the depth of the potential tension crack. Struts should be installed before lateral displacement occurs.

3. Shoring should be provided for excavations where limited space precludes adequate side slopes, e.g., where granular soils will not stand on stable slopes and/or for deep open cuts.

4. All excavation, trenching and shoring should be designed and constructed by qualified professionals in accordance with OSHA requirements.

The maximum (steepest) allowable slopes for OSHA Soil Types for excavations less than 20 feet are presented on Plate D-2, in Appendix D.

If limited space is available for the required open trench side slopes, the space required for the slope can be reduced by using a combination of bracing and open cut as illustrated on Plate D-3, in Appendix D. Guidelines for bracing and calculating bracing stress are presented below.

<u>Computation of Bracing Pressures:</u> The following method can be used for calculating earth pressure against bracing for open cuts. Lateral pressure resulting from construction equipment, traffic loads, or other surcharge should be taken into account by adding the equivalent uniformly distributed surcharge to the design lateral pressure. Hydrostatic pressure, if any, should also be considered. The active earth pressure at depth z can be determined by Equation (6). The design soil parameters for trench bracing design are presented on Plates C-1a through C-1d, in Appendix C.

$$p_a = (q_s + \gamma h_1 + \gamma' h_2)K_a - 2c\sqrt{K_a} + \gamma_w h_2 \qquad \text{.....Equation (6)}$$

where:
- p_a = active earth pressure (psf);
- q_s = uniform surcharge pressure (psf);
- γ, γ' = wet unit weight and buoyant unit weight of soil (pcf);
- h_1 = depth from ground surface to groundwater table (ft);
- h_2 = $z-h_1$, depth from groundwater table to the point under consideration (ft);
- z = depth below ground surface for the point under consideration (ft);
- K_a = coefficient of active earth pressure;
- c = cohesion of clayey soils (psf); c can be omitted conservatively;
- γ_w = unit weight of water, 62.4 pcf.

Pressure distribution for the practical design of struts in open cuts for clays and sands are illustrated on Plates D-4 through D-6, in Appendix D.

Bottom Stability: In open-cuts, it is necessary to consider the possibility of the bottom failing by heaving, due to the removal of the weight of excavated soil. Heaving typically occurs in soft plastic clays when the excavation depth is sufficiently deep enough to cause the surrounding soil to displace vertically due to bearing capacity failure of the soil beneath the excavation bottom, with a corresponding upward movement of the soils in the bottom of the excavation. In fat and lean clays, heave normally does not occur unless the ratio of Critical Height to Depth of Cut approaches one. In very sandy and silty lean clays and granular soils, heave can occur if an artificially large head of water is created due to installation of impervious sheeting while bracing the cut. This can be mitigated if groundwater is lowered below the excavation by dewatering the area. Guidelines for evaluating bottom stability in clay soils are presented on Plate D-7, in Appendix D.

If the excavation extends below groundwater, and the soils at or near the bottom of the excavation are mainly sands or silts, the bottom can fail by blow-out (boiling) when a sufficient hydraulic head exists. The potential for boiling or in-flow of granular soils increases where the groundwater is pressurized. To reduce the potential for boiling of excavations terminating in granular soils below pressurized groundwater, the groundwater table should be lowered at least 5 feet below the excavation in accordance with Section 01578 of the 2009 COHSCS.

Calcareous nodules, silt/sand seams, and fat clays with slickensides were encountered in some of the borings. These secondary structures may become sources of localized instability when they are exposed during excavation, especially when they become saturated. Such soils have a tendency to slough or cave in when not laterally confined, such as in trench excavations. The Contractor should be aware of the potential for cave-in of the soils. Low plasticity soils (silts and clayey silts) will lose strength and may behave like granular soils when saturated.

5.2.3 Thrust Force Design Recommendations

Thrust forces are generated in pressure pipes, typically as a result of changes in pipe diameter, pipe direction or at the termination point of the pipes. The pipes could disengage at the joints if the forces are not balanced and if the pipe restraint is not adequate. Various methods of thrust restraint are used including thrust blocks, restrained joints, encasement and tie-rods.

Thrust restraint design procedures based on the 2008 American Water Works Association (AWWA) Manual "Concrete Pressure Pipe (M9)" is discussed below. Plate D-9, in Appendix D shows the force diagram generated by flow in a bend in a pipe and also gives the equation for computing the thrust force. An example computation of a thrust force for a given surge pressure and a bend angle is presented on Plate D-10, in Appendix D.

Frictional Resistance: The unbalanced force due to changes in grade and alignment can also be resisted by frictional force F_R, between the pipe and the surrounding soil. The resisting frictional force per linear foot of pipe against soil can be calculated from Equation (7):

$$F_R = f\,(2W_e + W_w + W_p) \qquad \text{.....Equation (7)}$$

where: f = Coefficient of friction between pipe and soil;
W_e = Weight of soil over pipe (lb/ft);
W_w = Weight of water inside the pipe (lb/ft);
W_p = Weight of pipe (lb/ft).

The value of the frictional resistance depends on the material in contact with the backfill and the soil used in the backfill. For a ductile iron pipe or PVC pipe with crushed stone or compacted sand backfill, an allowable coefficient of friction of 0.3 can be used. To account for submerged conditions, a soil unit weight of 60 pcf should be used to compute the weight of compacted backfill on the pipe.

Thrust Blocks: Thrust blocks utilize passive earth pressures to resist forces generated by changes in direction or diameter of pressurized pipes. Passive earth pressure can be calculated using Equation (8); we recommend that a factor safety of 2.0 be used when using passive earth pressure for design of thrust blocks. The design soil parameters for thrust block design are presented on Plates C-1a through C-1c, in Appendix C.

$$p_p = \gamma z K_p + 2c(K_p)^{1/2} \qquad \text{.....Equation (8)}$$

where, p_p = passive earth pressure (psf);
γ = wet unit weight of soil (pcf);
z = depth below ground surface for the point under consideration (ft);
K_p = coefficient of passive earth pressure;
c = cohesion of clayey soils (psf).

5.2.4 Bedding and Backfill

Trench excavation, pipe embedment material, and backfill for the proposed waterlines should be in general accordance with Item 02317 of the 2009 COHSCS. Backfill should be placed in loose lifts not exceeding 8 inches and compacted to 95 percent of its ASTM D-698 (Standard Proctor) maximum dry density at a moisture content ranging between optimum and 3 percent above optimum.

5.3 Installation of Waterlines by Auger Method

According to drawings provided by LAN, approximately 3,620 linear feet of 8- to 12-inch waterlines will be installed by auger method, beginning at the intersection of the alignment with W. Orem Street and ending at the intersection of Wood River Drive and River Bluff Drive (i.e. Borings B-7 through B-11). In general, the 8- to 12-inch waterlines will have an invert depth of approximately 4 feet below existing grade.

Augering operations should be performed in general accordance with Section 02447 of the 2009 COHSCS. The Contractor is responsible for selecting, designing, installing, maintaining and monitoring safe augering systems and retaining professionals who are qualified and experienced to perform the tasks and who are capable of modifying the system, as required. The following discussion provides general guidelines to the Contractor for augering methods. The information in this report should be reviewed so that appropriate augering equipment and techniques can be planned and factored into the construction plan and cost estimate.

Loadings on Pipes: Recommendations for computation of loadings on pipes are presented in Section 5.2.1 above.

Thrust Restraint: Thrust force design recommendations are presented in Section 5.2.3 above.

5.3.1 Auger Pits

Auger pits are required for starting and ending pipes. Auger pits that are constructed in conjunction with open cut method should be in accordance with Section 02317 of the 2009 COHSCS.

Computation of Bracing Pressures: Computation of earth pressures against temporary bracing for pit walls can be calculated using Equation (6) in Section 5.2.2 above. The recommendations given in Section 5.2.2 should be used for design of auger pit excavations.

Reaction Walls: For braced pit walls to be used to provide passive reaction for pipe jacking, passive earth pressure can be calculated using Equation (8) in Section 5.2.3; we recommend that a factor safety of 2.0 be used for passive earth pressure. The design soil parameters are presented on Plates C-1a through C-1d, in Appendix C.

Critical Height: Recommendations for evaluating auger pit critical height are presented in Section 5.2.2 above.

Bottom Stability: Recommendations for evaluating auger pit bottom stability are presented in Section 5.2.2 above.

5.3.2 Auger Face Stability during Construction

A Stability Factor, $N_t = (P_z - P_a)/C_u$ may be used to evaluate the stability of an unsupported bore face in cohesive soils, where P_z is the overburden pressure to the bore centerline; P_a is the equivalent uniform interior pressure applied to the face; and C_u is the soil undrained shear strength. For augering operations, no interior pressure is applied. Generally, N_t values of 4 or less are desirable as it represents a practical limit below which augering may be accomplished without significant difficulty. Higher N_t values usually lead to large deformations of the soil around the bore and problems associated with increased subsidence. It should be noted that the exposure time of the face is most important; with time, creep of the soil will occur, resulting in a reduction of shear strength. The N_t values will therefore increase when construction is slow.

Based on Borings B-7 through B-11, an N_t value of about 0.3 or less was estimated for the cohesive soils encountered in the soil borings within the invert depths of about 4 feet below existing grade. Based on our borings, AEC does not anticipate that granular soils or ground water will be encountered at the auger invert depths of 4 feet below existing grade; however, if granular or soft cohesive soils are encountered, the Contractor should make provisions to use casing to stabilize the auger holes. The Contractor should not base their bid on the above information alone, since granular soils may be encountered between boring locations; the Contractor should verify the subsurface conditions between boring locations or add a contingency.

5.3.3 Backfill for Auger Pits

Recommendations for backfill of auger pits are presented in Section 5.2.4 above.

5.3.4 Influence of Augering on Adjacent Structures

Based on Borings B-7 through B-11, stiff to hard sandy clays will be encountered within the auger zone at a maximum invert depth of 4 feet below existing grade. AEC anticipates that the likelihood that steel casing will be required because soft soils and/or saturated granular soils are encountered during augering operations is low. However, the Contractor should be aware that these soil conditions could exist even though they are not indicated on the boring logs, and should prepare accordingly.

Ground Subsidence: Augering in soft ground often induces some degree of settlement (ground subsidence) of the overlying ground surface. If such settlement is excessive, it may cause damage to existing structures and services located above and/or near the auger zone.

Predicting the amount of loss of ground (or ground subsidence) due to augering is very difficult, primarily because of the uncertainty involved in the analysis: such as heterogeneous soil properties, subsurface variability, or lack of information about proposed construction equipment and techniques.

Loss of Soil Support for Adjoining Structures: Augering operations, when located close to existing structures, will relieve the vertical and lateral soil support that these structures rely upon for their foundation bearing capacity and lateral soil support. This can result in distress to the existing structures if appropriate precautions are not taken.

Measures to Reduce Distress from Augering: Impact to the existing foundations and structures can be mitigated by following proper tunneling procedures. Some methods to mitigate movement and/or distress to existing structures include supporting the excavation with steel pipe or the pipe material itself as soon as the excavation is advanced and at short intervals and properly grouting of the annular spaces where necessary.

The auger influence zone is assumed to extend a distance of about 2.5i from the center of the auger tunnel, as shown on Plate D-11, in Appendix D. Based on a maximum invert depth of 4 feet below existing grade, we estimated the resulting influence zones (extending from the centerline of the auger tunnel) to be approximately 5 feet. We emphasize that the size of the influence zone of an auger tunnel is difficult to determine because several factors influence the response of the soil to augering operations including type of soil, ground water level, type of augering equipment, method of augering, experience of operator and other construction in the vicinity. The values of auger tunnel influence zone presented herein are therefore rough estimates.

We recommend that the following situations be evaluated on a case by case basis, where:

- augering cannot be located farther than the minimum distance recommended above;
- augering cannot be located outside the stress zone of the foundations for existing structures;
- unstable soils are encountered near existing structures;
- heavily loaded or critical structures are located close to the influence zone of the auger tunnels;

As an option, existing structure foundations should be protected by adequate shoring or strengthened by underpinning or other techniques, provided that augering cannot be located outside the stress zone of the existing foundations.

Disturbance and loss of ground from the augering operation may create surface soil disturbance and subsidence which in turn may cause distress to existing structures (including underground utilities and pavements) located in the zone of soil disturbance. Any open-cut excavation in the proposed augering areas should be adequately shored.

5.4 Tunneling and Its Influence on Adjacent Structures

Based on the 70 percent plan and profile drawings provided by LAN, the proposed waterline will be installed by tunneling (bore/auger) method where the alignment crosses Sims Bayou and the Fort Bend County Toll Road; the alignment stations, approximate lengths and possible subsurface conditions are summarized in Table 4 below.

Table 4. Subsurface Conditions in Borings within Tunnel Zones

Soil Boring	Station	Tunnel Segment	Proposed Pipe Invert Elevation (ft)	Soil Types Encountered in AEC's Borings within Tunnel Zone (ASTM D2487)	Ground Water Depth below Existing Ground Surface (ft)		
					During Drilling	¼ Hour After First Encounter	In Piezometer
B-5	55+05	Sims Bayou	20	Very stiff Sandy Lean Clay (CL)	17	12	n/a
B-6	52+60	Sims Bayou	23	Clayey Sand (SC)	25	11.6	15.0 (8/20/10) 13.4 (9/22/10) 14.1 (12/1/10)
B-6A	52+55	Sims Bayou	23	Stiff to very stiff Lean Clay (CL)	28	16.7	n/a
B-7A	50+65	Ft. Bend County Toll Road	15	Stiff to hard Fat Clay (CH)	25	21.5	n/a
B-7	47+62	Ft. Bend County Toll Road	15	Very stiff Lean Clay w/Sand (CL)	25	14.5	n/a

Tunneling should be performed by qualified Contractors who are experienced in planning, designing, implementing and monitoring tunneling activities. Tunneling operations should comply with Section 02425 (LD) "Tunnel Excavation and Primary Liner (for large diameter pipe)" of the 2009 COHSCS; placement of pipe inside tunnel constructed with primary liner shall be in accordance with Section 02426 - "Sewer Line in Tunnels" of the 2009 COHSCS.

Loadings on Pipes: Recommendations for computation of loadings on pipes installed by tunnel method are presented in Section 5.2.1 above.

5.4.1 Tunnel Access Shafts

Tunnel access shafts should be constructed in accordance with Section 02400 of the 2009 COHSCS. Based on Borings B-5, B-6, B-6A, B-7, and B-7A, the start and end tunnel access shafts will probably encounter ground water, and saturated granular soils will be encountered in the vicinity of Boring B-6. For access shafts that extend into water-bearing sand/silt, AEC recommends that the access shaft walls be supported by internally-braced steel sheet piles.

AEC anticipates that dewatering operations will also be required in order to perform tunnel and access shaft construction. Dewatering should be conducted by either: (i) deep wells with turbine or submersible pumps; (ii) ground freezing; or (iii) chemical/mud grouting of the sandy soils in the immediate surrounding area. Generally, the groundwater depth should be lowered at least 5 feet below the excavation bottom (in accordance with Section 01578 of the 2009 COHSCS) to be able to work on a firm surface when water-bearing granular soils are encountered. If deep wells are used to dewater the excavation, extended and/or excessive dewatering can result in settlement of existing structures in the vicinity. One option to reduce the risk of settlement in these cases includes installing a series of injection wells around the perimeter of the construction area. General dewatering recommendations are presented in Section 6.2 of this report. The options for dewatering presented here are for reference purposes only; it is the Contractor's responsibility to take the necessary precautions to minimize the effect on existing structures in the vicinity of the dewatering operation.

Sheet Piling: Design soil parameters for sheet pile design are presented on Plates C-1a through C-1d, in Appendix C. AEC recommends that the sheet piling be based on short term design parameters, unless the construction is expected to take longer than 3 months, after which the sheet pile design should consider both short-term and long-term parameters; whichever is critical should be used for design. The determination of the pressures exerted on the sheet piles by the retained soils shall consider active earth pressure, hydrostatic pressure, and uniform surcharge (including construction equipment, soil stockpiles, and traffic load, whichever surcharge is more critical).

Sheet pile design should be based on the following considerations:

(1) Ground water elevation at the top of the ground surface on the retained side;
(2) Ground water elevation 5 feet below the bottom of the access shaft excavation (assuming dewatering operations are using deep wells);
(3) Neglect cohesion for active pressure determination, Equation (6) in Section 5.2.2;
(4) The design retained height should extend from the ground surface to the water line tunnel invert depth;
(5) A 300 psf uniform surcharge pressure from construction equipment or soil stockpiles should be considered at the top of the sheet piles; loose soil stockpiles during access shaft construction should be limited to 3 foot high or less;
(6) Use a Factor of Safety of 2.0 for passive earth pressure in front of (i.e. the shaft side) the sheet piles.

Design, construction, and monitoring of sheet piles should be performed by qualified personnel who are experienced in this operation. Sheet piles should be driven in pairs, and proper construction controls provided to maintain alignment along the wall and prevent outward leaning of the sheet piles. Construction of the sheet piles should be in accordance with Item 407 of the 2004 Texas Department of Transportation (TxDOT) Standard Specifications for Construction and Maintenance of Highways, Streets, and Bridges.

Bottom Stability: Recommendations for evaluating tunnel access shaft bottom stability are presented in Section 5.2.2 above.

5.4.2 Reaction Walls

Reaction walls (if used) will be part of the tunnel shaft walls; they will be rigid structures and support tunneling operations by mobilizing passive pressures of the soils behind the walls. The passive earth pressure can be calculated using Equation (8) in Section 5.2.3; we recommend that a factor safety of 2.0 be

used for passive earth pressure. The design soil parameters are presented on Plates C-1a through C-1d, in Appendix C.

Due to subsurface variations, soils with different strengths and characteristics will likely be encountered at a given location. The soil resulting in the lowest passive pressure should be used for design of the walls. The soil conditions should be checked by geotechnical personnel to confirm the recommended soil parameters.

5.4.3 Tunnel Face Stability during Construction

5.4.3.1 General

The stability of a tunnel face is governed primarily by ground water and subsurface soil conditions. Based on the subsurface conditions encountered in our borings and the proposed invert depths, we anticipate that stiff to very stiff lean/fat clay (CL/CH) will generally encountered at the proposed tunneling depths along the alignment near Borings B-5, B-6A, B-7A, and B-7; water-bearing clayey sand (SC) will generally encountered at the proposed tunneling depths along the alignment near Boring B-6. Secondary features such as sand or silt seams/pockets/layers were also encountered within the cohesive soils, and could be significant at some locations. In addition, the type and property of subsurface soils are subject to change between borings, and may be different at locations away from our borings.

When granular soils are encountered during construction the tunnel face can become unstable. Granular soils below ground water will tend to flow into the excavation hole; granular soils above the ground water level will generally not stand unsupported but will tend to ravel until a stable slope is formed at the face with a slope equal to the angle of repose of the material in a loose state. Thus, granular soils are generally considered unstable in an unsupported excavation face; uncontrolled flowing soil can result in large loss of ground. The Contractor should be prepared to use tunneling methods that are suitable for construction in saturated granular soils, such as using a Tunnel Boring Machine (TBM) utilizing full shielding with a closed tunnel face.

5.4.3.2 Anticipated Ground Behavior

Tunnel face stability is described in Section 5.3.2 above. The N_t values estimated for the cohesive soils encountered above the tunnels in Borings B-5, B-6A, B-7A, and B-7 are presented in Table 5. N_t was not able to be determined for Boring B-6 due to the presence of granular soils.

Table 5. Tunnel Face Stability Factor

Soil Boring	Station	Tunnel Segment	Proposed Pipe Invert Elevation (ft)	Soil Types Encountered in Tunnel Zone (ASTM D2487)	Stability Factor, N_t
B-5	55+05	Sims Bayou	20	Very stiff Sandy Lean Clay (CL)	1.0
B-6	52+60	Sims Bayou	23	Clayey Sand (SC)	n/a
B-6A	52+55	Sims Bayou	23	Stiff to very stiff Lean Clay (CL)	1.5
B-7A	50+65	Ft. Bend County Toll Road	15	Stiff to hard Fat Clay (CH)	1.0
B-7	47+62	Ft. Bend County Toll Road	15	Very stiff Lean Clay w/Sand (CL)	0.9

We anticipate water-bearing granular soils (clayey sand) will generally be encountered in Boring B-6; in accordance with Section 02425 of the 2009 COHSCS a two-pass liner system will be used for tunnel construction. Selection of a TBM should be based on appropriate consideration of soil conditions and ground water conditions (such as sand or silt layers below water table or non-cohesive granular soil above hard clay) encountered in the borings; Plate D-12, in Appendix D, provides a general guideline for TBM selection.

5.4.3.3 Influence of Tunneling on Existing Structures

AEC notes that the tunnel will cross under Sims Bayou and the Fort Bend County Toll Road. However, the determination of which structures along the alignment which may be influenced by tunneling should be performed by the Contractor during their pre-construction investigation phase, which will also be dependent on the Contractor's construction methods. The recommendations in this report are intended to be a reference to the Contractor only.

General recommendations for the determination of tunneling influence zones are presented in Section 5.3.4 above. AEC emphasizes that the size of the influence zone of a tunnel is difficult to determine because several factors influence the response of the soil to tunneling operations including type of soil, ground water level, dewatering method, type of tunneling equipment, method of tunneling, experience of operator, and other construction in the vicinity. Methods to prevent movement and/or distress to existing structures will require the services of a specialty contractor.

We estimated the resulting influence zones (extending from the centerline of the tunnel) to be approximately 15 to 20 feet for the soils encountered in Borings B-5, B-6, B-6A, B-7A, and B-7; as noted above, the values of tunnel influence zone presented herein are rough estimates.

5.4.3.4 Measures to Reduce Distress from Tunneling

Impact to existing foundations and structures can be mitigated by following proper tunneling procedures. Some methods to mitigate movement and/or distress to existing structures include supporting the excavation with steel pipe or the pipe material itself as soon as the excavation is advanced and at short intervals, and properly grouting of the annular spaces where necessary, in accordance with Section 02431 of the 2009 COHSCS. Plate D-13, in Appendix D, provides a general guideline for selection of grouting material.

To reduce the potential for the tunneling to influence existing foundations or structures, we recommend that the outer edge of the influence zone of the auger tunnel be a minimum of 5 feet from the outer edge of the bearing (stress) zone of existing foundations. The bearing (stress) zone is defined by a line drawn downward from the outer edge of an existing foundation and inclined at an angle of 45 degrees to the vertical.

We recommend that the following situations be evaluated on a case by case basis, where:

- tunneling cannot be located farther than the minimum distance recommended above;
- tunneling cannot be located outside the stress zone of the foundations for existing structures;
- unstable soils are encountered near existing structures;
- heavily loaded or critical structures are located close to the influence zone of the tunnels;

As an option, existing structure foundations should be protected by adequate shoring or strengthened by underpinning or other techniques, provided that tunneling cannot be located outside the stress zone of the existing foundations.

Disturbance and loss of ground from the tunneling operation may create surface soil disturbance and subsidence which in turn may cause distress to existing structures (including underground utilities and pavements) located in the zone of soil disturbance. Any open-cut excavation in the proposed tunneling areas should be adequately shored.

5.4.3.5 Monitoring Existing Structures

The Contractor should be responsible for monitoring existing structures nearby and taking necessary action to mitigate impact to adjacent structures. Existing structures located close to the proposed construction excavations should be surveyed prior to construction and pre-existing conditions of such structures and their vicinity be adequately recorded. This can be accomplished by conducting a pre-construction survey, taking photographs and/or video, and documenting existing elevations, cracks, settlements, and other existing distress in the structures. The monitoring should include establishment of elevation monitor stations, crack gauges, and inclinometers, as required. The monitoring should be performed before, periodically during, and after construction. The data should be reviewed by qualified engineers in a timely manner to evaluate the impact on existing structures and develop plans to mitigate the impact, should it be necessary.

5.5 Pavement Reconstruction

Based on drawings provided by LAN, portions of Coach Creek Drive, Wood River Drive, River Bluff Drive, and Summit Ridge Drive will be replaced with new pavement where the waterline trench excavation will be located on existing pavement. AEC assumes that the new pavement will be placed at or near existing grade. Based on Table 2 in Section 4.0, the concrete pavement along the existing residential streets varies from 5 to 7.5 inches thick.

Traffic volume or loading was not available to AEC at the time this report was prepared. Chapter 10, Section 10.04 of the 2005 City of Houston Infrastructure Design Manual indicates a minimum concrete pavement thickness of 6 inches for residential streets with a minimum curb to curb width of less than 27

feet, and a minimum concrete pavement thickness of 7 inches for residential streets with a minimum curb to curb width greater than 27 feet.

The pavement design recommendations developed below are in accordance with the "AASHTO Guide for Design of Pavement Structures," 1993 edition.

5.5.1 Rigid Pavement

Rigid pavement design is based on the anticipated design number of 18-kip ESALs the pavement is subjected to during its design life. The parameters that were used in computing the rigid pavement section are as follows:

Overall Standard Deviation (S_0)	0.34
Initial Serviceability (P_0)	4.5
Terminal Serviceability (P_t)	2.0
Reliability Level (R)	90%
Overall Drainage Coefficient (C_d)	1.0
Load Transfer Coefficient (J)	3.2
Loss of Support Category (LS)	1.0
Roadbed Soil Resilient Modulus (M_R)	4,500 psi
Elastic Modulus (E_{sb}) of Stabilized Soils	20,000 psi
Composite Effective Modulus of Subgrade Reaction (k)	86 pci
Mean Concrete Modulus of Rupture (S'_c)	600 psi (at 28 days)
Concrete Elastic Modulus (E_c)	3.37×10^6 psi

Recommended rigid pavement sections are provided on Table 6 below.

Table 6. Recommended Rigid Pavement Sections

Pavement Layer	Thickness (in)	
	Curb-to-Curb Width Less Than or Equal to 27'	Curb-to-Curb Width Greater Than 27'
Portland Cement Concrete	6	7
Lime-stabilized Subgrade	6	6

Given the above design parameters, the concrete pavement section for 6 and 7 inch thick residential roadways should sustain 370,500 and 905,250 repetitions of 18-kip ESALs, respectively. The design engineer should verify whether the proposed pavement section will provide enough ESALs for the

anticipated amount of site traffic. AEC should be notified if different standards or constants are required for pavement design at the site, so that our recommendations can be updated accordingly.

Concrete Pavement: Portland Cement Concrete (PCC) pavement should be constructed in accordance with Section 02751 of the 2009 COHSCS. According to the COHSCS, concrete mix design has a required flexural strength of 600 psi at 28 days and field testing shall confirm a minimum concrete compressive strength of 3,500 psi at 28 days. The Contractor shall be responsible for ensuring that a concrete mix design based on concrete compressive strength of 3,500 psi at 28 days also meets a minimum concrete flexural strength of 500 psi at 7 days and 600 psi at 28 days.

5.5.2 Reinforcing Steel

Reinforcing steel should be in accordance with Section 02751, Drawing 02751-01, of the 2009 COHSCS. Reinforcing steel is required to control pavement cracks, deflections across pavement joints and resist warping stresses in rigid pavements. The cross-sectional area of steel (A_s) required per foot of slab width can be calculated as follows (for both longitudinal and transverse steel).

$$A_s = FLW/(2f_s) \qquad \text{.....Equation (9)}$$

where:
- A_s = Required cross-sectional area of reinforcing steel per foot width of pavement, in^2
- F = Coefficient of resistance between slab and subgrade, F = 1.8 for stabilized soil
- L = Distance between free transverse joints or between free longitudinal edges, ft.
- W = Weight of pavement slab per foot of width, lbs/ft
- f_s = Allowable working stress in steel, 0.75 x (yield strength), psi
  i.e. f_s = 45,000 psi for Grade 60 steel.

5.5.3 Pavement Subgrade Preparation

Existing pavement and base should be demolished in accordance with Section 02221 of the 2009 COHSCS. Subgrade preparation should extend a minimum of 2 feet beyond the paved area perimeters. After demolition of existing pavement and base, we recommend that a minimum of 6 inches of surface soils, existing vegetation, trees, roots, and other deleterious materials be removed and wasted. The excavation depth should be increased when inspection indicates the presence of organics and deleterious materials to greater depths. The exposed soils should be proof-rolled in accordance with Item 216 of the 2004 TxDOT Standard Specifications to identify and remove any weak, compressible, or other unsuitable materials; such

materials should be replaced with compacted select fill.

Scarify the top 6 inches of the exposed subgrade and stabilize with at least 6 percent hydrated lime by dry soil weight. Lime stabilization shall be performed in accordance with Section 02336 of the 2009 COHSCS. The percentage of lime required for stabilization is a preliminary estimate for planning purposes only; laboratory testing should be performed to determine optimum contents for stabilization prior to construction. The stabilized soils should be compacted to 95 percent of their ASTM D 698 (Standard Proctor) dry density at a moisture content ranging from optimum to 3 percent above optimum.

5.6 Select Fill

Select fill should consist of uniform, non-active inorganic lean clays with a PI between 10 and 20 percent, and more than 50 percent passing a No. 200 sieve. Excavated material delivered to the site for use as select fill shall not have clay clods with PI greater than 20, clay clods greater than 2 inches in diameter, or contain sands/silts with PI less than 10. Prior to construction, the Contractor should determine if he or she can obtain qualified select fill meeting the above select fill criteria.

As an alternative to imported fill, on-site soils excavated during construction can be stabilized with hydrated lime. Excavated clay soils should be stabilized with at least 6 percent hydrated lime by dry soil weight. Lime stabilization shall be performed in accordance with Section 02336 of the 2009 COHSCS. The percentage of lime required for stabilization is a preliminary estimate for planning purposes only; laboratory testing should be performed to determine optimum contents for stabilization prior to construction. AEC prefers using stabilized on-site clay as select fill since compacted lime-stabilized clay generally has high shear strength, low compressibility, and relatively low permeability. Blended or mixed soils (sand and clay) should not be used as select fill.

All material intended for use as select fill should be tested prior to use to confirm that it meets select fill criteria. The fill should be placed in loose lifts not exceeding 8 inches in thickness. Backfill within 3 feet of walls or columns should be placed in loose lifts no more than 4-inches thick and compacted using hand tampers, or small self-propelled compactors. The lime-stabilized onsite soils or select fill should be compacted to a minimum of 95 percent of the ASTM D 698 (Standard Proctor) maximum dry unit weight at a moisture content ranging between optimum and 3 percent above optimum.

If imported select fill will be used, at least one Atterberg Limits and one percent passing a No. 200 sieve test shall be performed for each 5,000 square feet (sf) of placed fill, per lift (with a minimum of one set of tests per lift), to determine whether it meets select fill requirements. Prior to placement of pavement, the moisture contents of the top 2 lifts of compacted select fill shall be re-tested (if there is an extended period of time between fill placement and pavement construction) to determine if the in-place moisture content of the lifts have been maintained at the required moisture requirements.

6.0 CONSTRUCTION CONSIDERATIONS

6.1 Site Preparation

To mitigate site problems that may develop following prolonged periods of rainfall, it is essential to have adequate drainage to maintain a relatively dry and firm surface prior to starting any work at the site. Adequate drainage should be maintained throughout the construction period. Methods for controlling surface runoff and ponding include proper site grading, berm construction around exposed areas, and installation of sump pits with pumps.

6.2 Groundwater Control

The need for groundwater control will depend on the depth of excavation relative to the groundwater depth at the time of construction. In the event that there is heavy rain prior to or during construction, the groundwater table may be higher than indicated in this report; higher seepage is also likely and may require a more extensive groundwater control program. In addition, groundwater may be pressurized in certain areas of the alignment, requiring further evaluation and consideration of the excess hydrostatic pressures. Groundwater control should be in general accordance with Section 01578-1 of the 2009 COHSCS.

The Contractor should be responsible for selecting, designing, constructing, maintaining and monitoring a groundwater control system and adapt his operations to ensure the stability of the excavations. Groundwater information presented in Section 4.1 and elsewhere in this report, along with consideration for potential environmental and site variation between the time of our field exploration and construction, should be incorporated in evaluating groundwater depths. The following recommendations are intended to guide the Contractor during design and construction of the dewatering system.

In cohesive soils seepage rates are lower than in granular soils and groundwater is usually collected in sumps and channeled by gravity flow to storm sewers. If cohesive soils contain significant secondary features, seepage rates will be higher. This may require larger sumps and drainage channels, or if significant granular layers are interbedded within the cohesive soils, methods used for granular soils may be required. Where it is present, pressurized groundwater will also yield higher seepage rates.

Groundwater for excavations within saturated sands can be controlled by the installation of wellpoints. The practical maximum dewatering depth for well points is about 15 feet. When groundwater control is required below 15 feet, multiple staged wellpoint or deep wells with submersible pumps have generally proved successful. Generally, the groundwater depth should be lowered at least 2 feet below the excavation bottom to be able to work on a firm surface when water-bearing granular soils are encountered.

Extended and/or excessive dewatering can result in settlement of existing structures in the vicinity; the Contractor should take the necessary precautions to minimize the effect on existing structures in the vicinity of the dewatering operation. We recommend that the Contractor verify the groundwater depths and seepage rates prior to and during construction and retain the services of a dewatering expert (if necessary) to assist him in identifying, implementing, and monitoring the most suitable and cost-effective method of controlling groundwater.

For open cut construction in cohesive soils, the possibility of bottom heave must be considered due to the removal of the weight of excavated soil. In lean and fat clays, heave normally does not occur unless the ratio of Critical Height to Depth of Cut approaches one. In silty clays, heave does not typically occur unless an artificially large head of water is created through the use of impervious sheeting in bracing the cut. Guidelines for evaluating bottom stability are presented in Section 5.2.2.

6.3 Construction Monitoring

Pavement construction and subgrade preparation, as well as excavation, bedding, and backfilling of underground utilities should be monitored by qualified geotechnical professionals to check for compliance with project documents and changed conditions, if encountered. AEC should be allowed to review the design and construction plans and specifications prior to release to check that the geotechnical

recommendations and design criteria presented herein are properly interpreted.

6.4 Monitoring of Existing Structures

Existing structures in the vicinity of the proposed alignment should be closely monitored prior to, during, and for a period after excavation. Several factors (including soil type and stratification, construction methods, weather conditions, other construction in the vicinity, construction personnel experience and supervision) may impact ground movement in the vicinity of the alignment. We therefore recommend that the Contractor be required to survey and adequately document the condition of existing structures in the vicinity of the proposed alignments.

7.0 LIMITATIONS

The information contained in this report summarizes conditions found on the dates the borings were drilled. The attached boring logs are true representations of the soils encountered at the specific boring locations on the dates of drilling. Reasonable variations from the subsurface information presented in this report should be anticipated. If conditions encountered during construction are significantly different from those presented in this report; AEC should be notified immediately.

This investigation was performed using the standard level of care and diligence normally practiced by recognized geotechnical engineering firms in this area, presently performing similar services under similar circumstances. This report is intended to be used in its entirety. The report has been prepared exclusively for the project and location described in this report. If pertinent project details change or otherwise differ from those described herein, AEC should be notified immediately and retained to evaluate the effect of the changes on the recommendations presented in this report, and revise the recommendations if necessary. The recommendations presented in this report should not be used for other structures located along these alignments or similar structures located elsewhere, without additional evaluation and/or investigation.

AVILES ENGINEERING CORP.

8.0 CLOSING REMARKS

AEC appreciates the opportunity to be of service on this project and looks forward to our continuing association during the construction phase of this project and on future projects.

AVILES ENGINEERING CORPORATION
(TBPE Firm Registration No. F-42)

12/3/10

STATE OF TEXAS
WILBER L. WANG
99226
LICENSED
PROFESSIONAL ENGINEER

Wilber L. Wang, M.Eng., P.E.
Project Engineer

Shou Ting Hu, M.S.C.E., P.E.
Chief Engineer

December 3, 2010

Final Copies Submitted:	3	Lockwood, Andrews, and Newnam, Inc.
	1	File

Z:\Engineering\reports\2010\137-10 COH SWTP Contract 74A-1 Waterline - LAN (Wilber)\G137-10 Final.doc

AVILES ENGINEERING CORP.

APPENDIX A

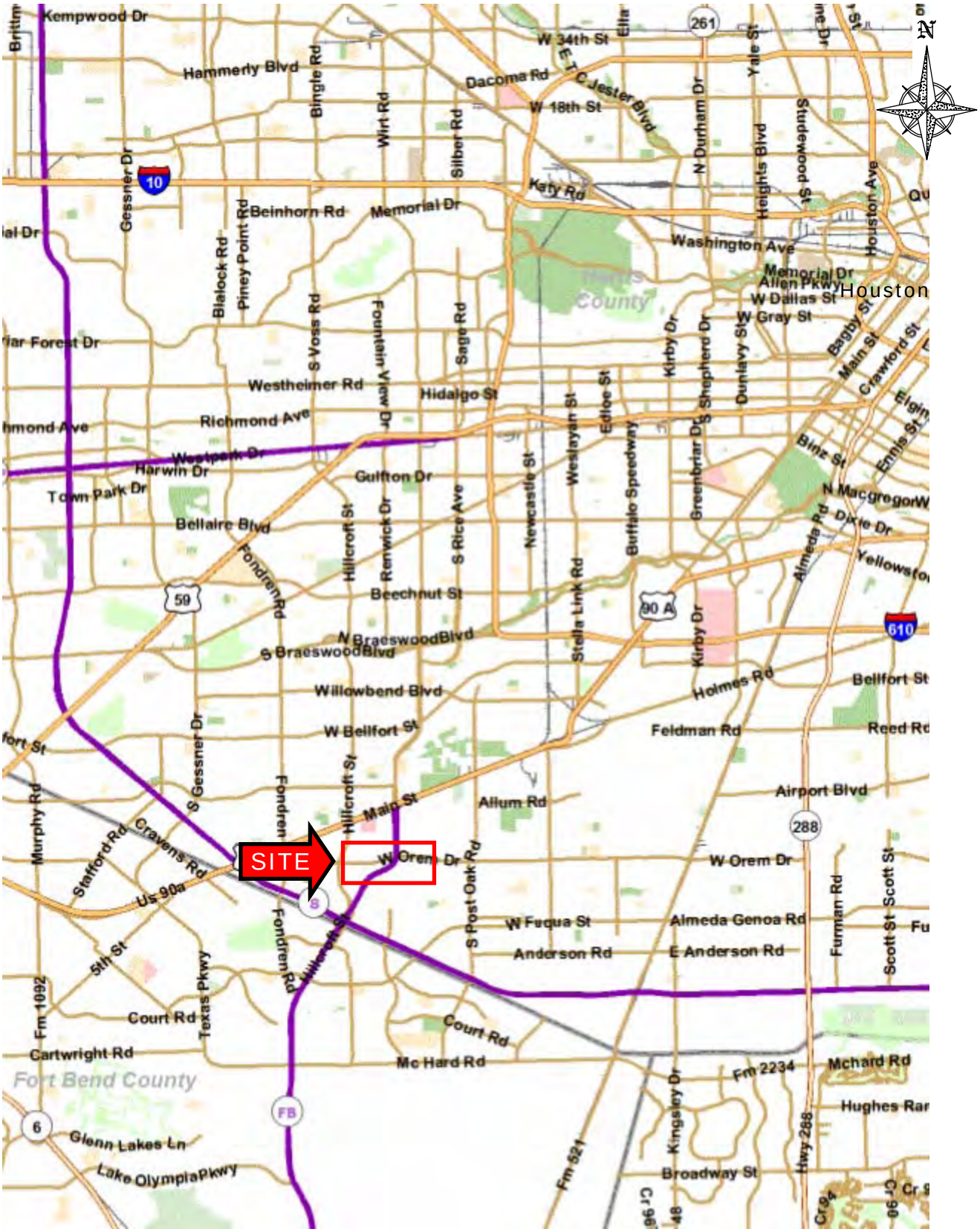

AVILES ENGINEERING CORPORATION

VICINITY MAP

CITY OF HOUSTON S.W.T.P. CONTRACT 74A-1 WATERLINE
WBS NO. S-000900-0109-3
HOUSTON, TEXAS

AEC PROJECT NO.:	DATE:	
G137-10	09-03-10	
APPROX. SCALE:	DRAFTED BY:	PLATE NO.:
N.T.S.	BpJ	PLATE A-1

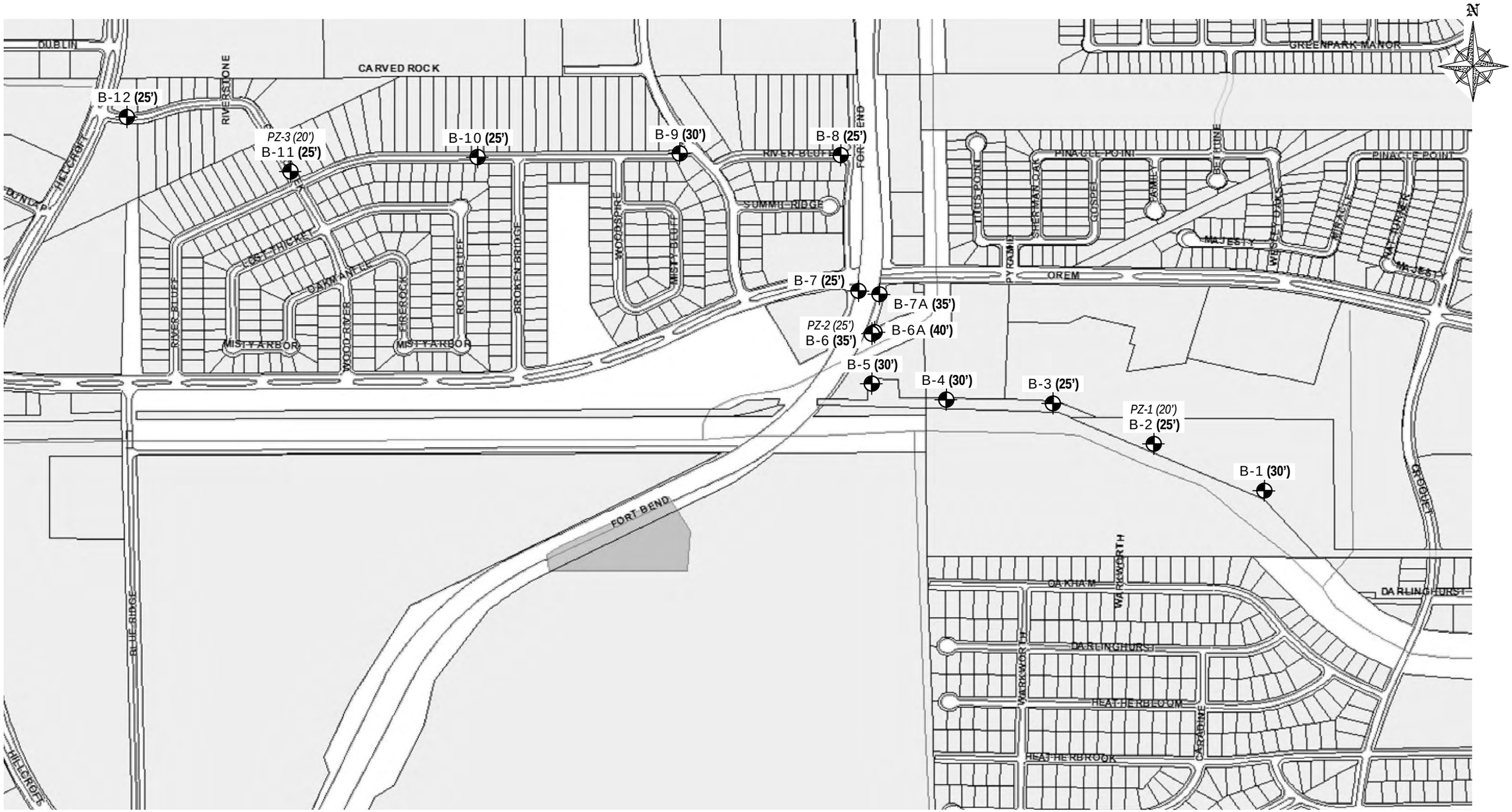

NOTE: BORING LOCATIONS ARE APPROXIMATE.

AVILES ENGINEERING CORPORATION

BORING LOCATION PLAN

CITY OF HOUSTON S.W.T.P. CONTRACT 74A-1 WATERLINE
WBS NO. S-000900-0109-3
HOUSTON, TEXAS

AEC PROJECT NO.:	DATE:	SOURCE DRAWING PROVIDED BY:
G137-10	12-02-10	C.O.H. GIMS
APPROX. SCALE: 1" = 500'	DRAFTED BY: BpJ	PLATE NO.: PLATE A-2

AVILES ENGINEERING CORP.
GEOTECHNICAL ENGINEERS

PROJECT: **SWTP Contract 74A-1 Waterline** BORING **B-1**

DATE **7/15/10** TYPE **4" Dry Auger/Wet Rotary** LOCATION **See Boring Location Plan**

DEPTH IN FEET	SYMBOL	SAMPLE INTERVAL	DESCRIPTION (Approximate Station: 74+45, Offset: 45 L)	S.P.T. BLOWS / FT.	MOISTURE CONTENT, %	DRY DENSITY, PCF	-200 MESH	LIQUID LIMIT	PLASTIC LIMIT	PLASTICITY INDEX
0			Fill: light gray Clayey Sand (SC), with roots and calcareous nodules		10		33	33	14	19
			Fill: very stiff, light gray and tan Sandy Lean Clay (CL), with shell, ferrous stains, sand seams and calcareous nodules		11	115				
6			Stiff to very stiff, dark gray Fat Clay (CH), with ferrous stains		24					
					25		92	61	18	43
					25	95				
12			-tan and light gray, with calcareous nodules 13'-15'		24		90	51	16	35
18			Very stiff to hard, light gray and tan Sandy Lean Clay (CL), with ferrous stains -boring caved in at 18.2'		17	113				
24			Medium dense to dense, light gray and tan Silty Sand (SM), wet	22	26		18			
30				42	24					
			Termination Depth = 30 feet.							
36										

SHEAR STRENGTH, TSF

△ Confined Compression
● Unconfined Compression
○ Pocket Penetrometer
□ Torvane

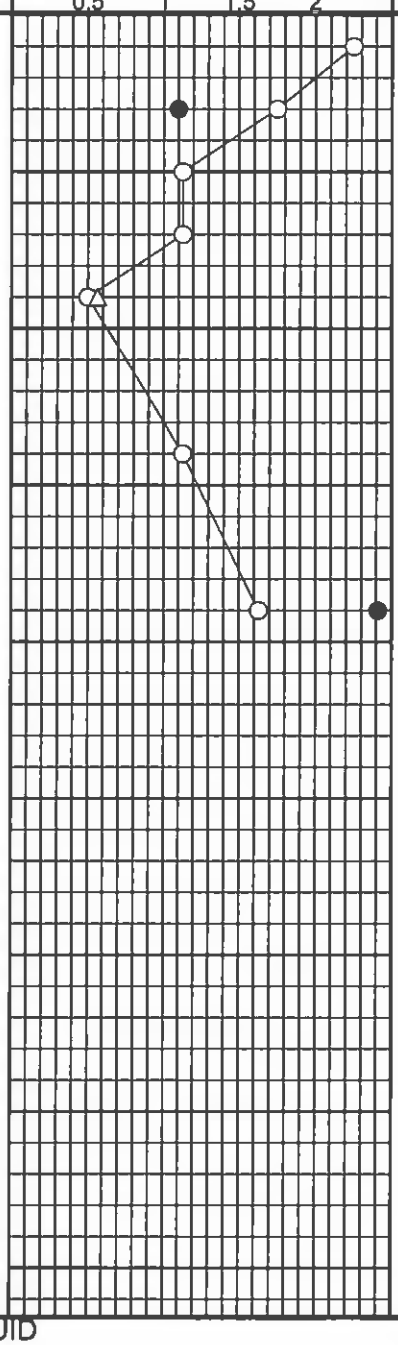

BORING DRILLED TO **20** FEET WITHOUT DRILLING FLUID
WATER ENCOUNTERED AT **21** FEET WHILE DRILLING
WATER LEVEL AT **14** FEET AFTER **1/4 HR**
DRILLED BY **V&S** CHECKED BY **WW** LOGGED BY **RJM**

PROJECT NO. G137-10

AVILES ENGINEERING CORP.
GEOTECHNICAL ENGINEERS

PROJECT: **SWTP Contract 74A-1 Waterline** BORING **B-2**

DATE **7/15/10** TYPE **4" Dry Auger/Wet Rotary** LOCATION **See Boring Location Plan**

DEPTH IN FEET	SYMBOL	SAMPLE INTERVAL	DESCRIPTION (*Approximate* Station: 70+25 Offset: 12 L)	S.P.T. BLOWS / FT	MOISTURE CONTENT, %	DRY DENSITY, PCF	-200 MESH	LIQUID LIMIT	PLASTIC LIMIT	PLASTICITY INDEX
0			Fill: stiff to very stiff, light gray and tan Fat Clay (CH), with calcareous nodules, ferrous stains, gravel and sandy clay seams		19	106				
			Fill: very stiff, light gray and tan Lean Clay w/Sand (CL), with fat clay pockets, sand seams and gravel		25		81	47	16	31
6			Stiff to hard, reddish brown and light gray Fat Clay (CH), with calcareous nodules		17					
			-with siltstone fragments 4'-8'		15	113				
			-light gray and tan 6'-8'		21		97	66	20	46
12			Firm to very stiff, tan and light gray Sandy Lean Clay (CL), with calcareous nodules		19	107				
			-boring caved in at 16.1'							
18			-brown and light gray, with silt partings and abundant siltstone fragments 18'-20'		14		66	23	14	9
24			Medium dense, tan Silty Sand (SM), wet	28	24		35			
			Termination Depth = 25 feet.							
30										
36										

SHEAR STRENGTH, TSF

△ Confined Compression
● Unconfined Compression
○ Pocket Penetrometer
□ Torvane

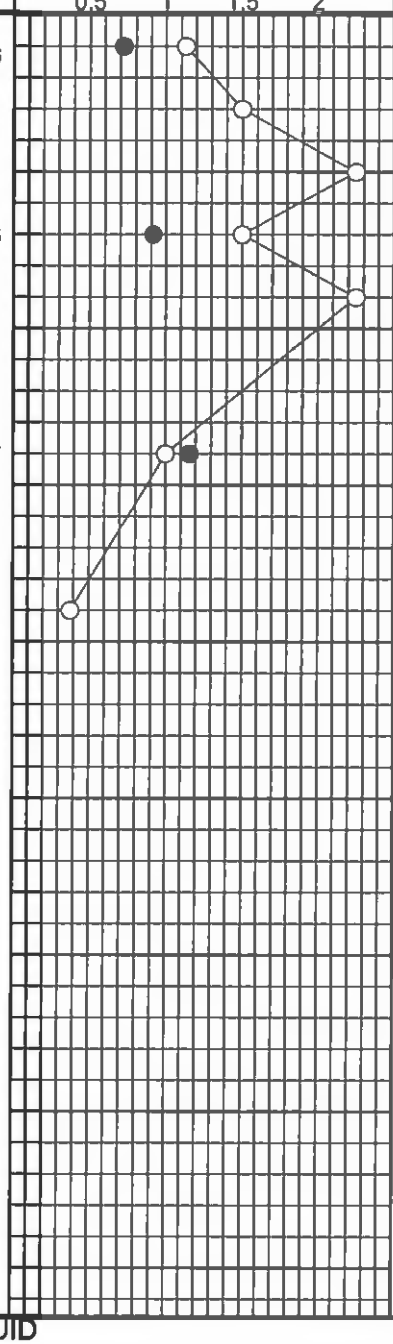

BORING DRILLED TO **20** FEET WITHOUT DRILLING FLUID
WATER ENCOUNTERED AT **18** FEET WHILE DRILLING ▽
WATER LEVEL AT **13.1** FEET AFTER **1/4 HR** ▼
DRILLED BY **V&S** CHECKED BY **WW** LOGGED BY **RJM**

PROJECT NO. G137-10

AVILES ENGINEERING CORP.
GEOTECHNICAL ENGINEERS

PROJECT: **SWTP Contract 74A-1 Waterline** BORING **B-3**

DATE **7/15/10** TYPE **4" Dry Auger/Wet Rotary** LOCATION **See Boring Location Plan**

DEPTH IN FEET	SYMBOL	SAMPLE INTERVAL	DESCRIPTION (Approximate Station: 64+80, Offset: 8 L)	S.P.T. BLOWS / FT.	MOISTURE CONTENT, %	DRY DENSITY, PCF	-200 MESH	LIQUID LIMIT	PLASTIC LIMIT	PLASTICITY INDEX
0			Fill: hard, light gray and tan Fat Clay w/Sand (CH), with calcareous nodules, shell and ferrous stains		16		80	50	16	34
			-with sand pockets 0'-2'		17					
			-with gravel 2'-4'							
6			Fill: hard, light gray and tan Lean Clay w/ Sand (CL), with gravel, sand seams and pockets, and abundant calcareous nodules		14	114	76	44	14	30
			-with shell 6'-8'		13					
12			Stiff to hard, light gray and reddish brown Fat Clay (CH), with slickensides and calcareous nodules		19	110				
			-with siltstone fragments 8'-10'		23		98	72	22	50
18			Very stiff to hard, tan and light gray Sandy Lean Clay (CL), with ferrous stains							
			-boring caved in at 17.5'							
			-with sand seams 18'-20'		19	107				
24			-with sand pockets 23'-25'		14		64	29	13	16
			Termination Depth = 25 feet.							
30										
36										

SHEAR STRENGTH, TSF

△ Confined Compression
● Unconfined Compression
○ Pocket Penetrometer
□ Torvane

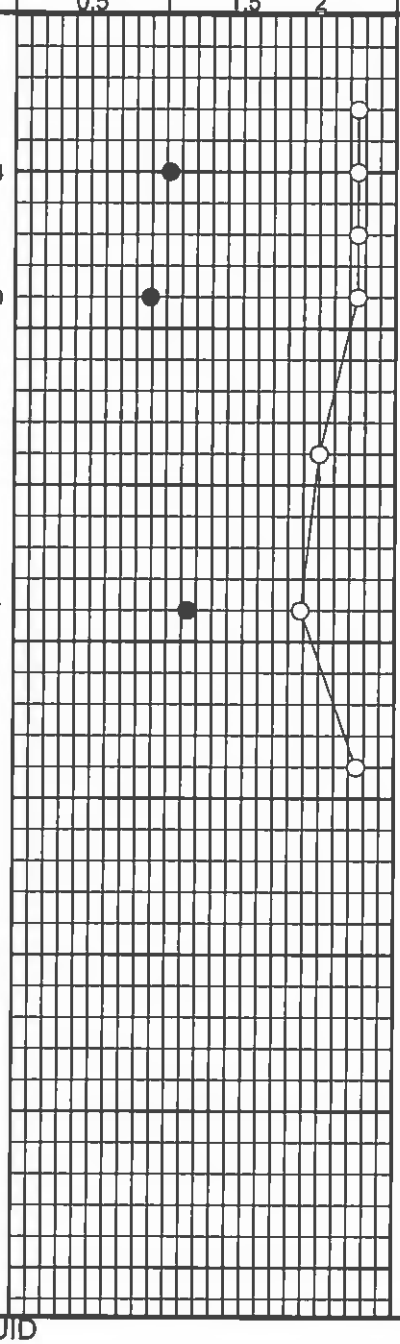

BORING DRILLED TO **17.5** FEET WITHOUT DRILLING FLUID
WATER ENCOUNTERED AT **22** FEET WHILE DRILLING ⊽
WATER LEVEL AT **11** FEET AFTER **1/4 HR** ⊽
DRILLED BY **V&S** CHECKED BY **WW** LOGGED BY **RJM**

PROJECT NO. G137-10

AVILES ENGINEERING CORP.
GEOTECHNICAL ENGINEERS

PROJECT: **SWTP Contract 74A-1 Waterline** BORING **B-4**

DATE **7/15/10** TYPE **4" Dry Auger/Wet Rotary** LOCATION **See Boring Location Plan**

DEPTH IN FEET	DESCRIPTION (Approximate Station: 60+00, Offset: 8 L)	MOISTURE CONTENT, %	DRY DENSITY, PCF	-200 MESH	LIQUID LIMIT	PLASTIC LIMIT	PLASTICITY INDEX
0	Fill: very stiff, dark gray and tan Lean Clay w/Sand (CL), with calcareous nodules, shell, sand seams, gravel and ferrous stains	15		72	47	15	32
	Fill: very stiff to hard, dark gray Fat Clay w/ Sand (CH), with shell and ferrous stains -with gravel and sand partings 2'-4'	13	112				
6		18					
	-with siltstone fragments and abundant calcareous nodules 8'-10'	17		85	58	17	41
		17	112				
12	Very stiff, tan and light gray Fat Clay w/Sand (CH), with sand pockets and ferrous stains	19		85	54	16	38
18	Very stiff to hard, tan, brown and light gray Sandy Lean Clay (CL), with abundant calcareous nodules and siltstone fragments -boring caved in at 20.1'	18	111				
24	Very stiff, reddish brown and light gray Fat Clay (CH), with calcareous nodules	21		92	55	18	37
30	Stiff to very stiff, tan and light gray Sandy Lean Clay (CL), with calcareous nodules and ferrous stains	17	112				
	Termination Depth = 30 feet.						
36							

SHEAR STRENGTH, TSF

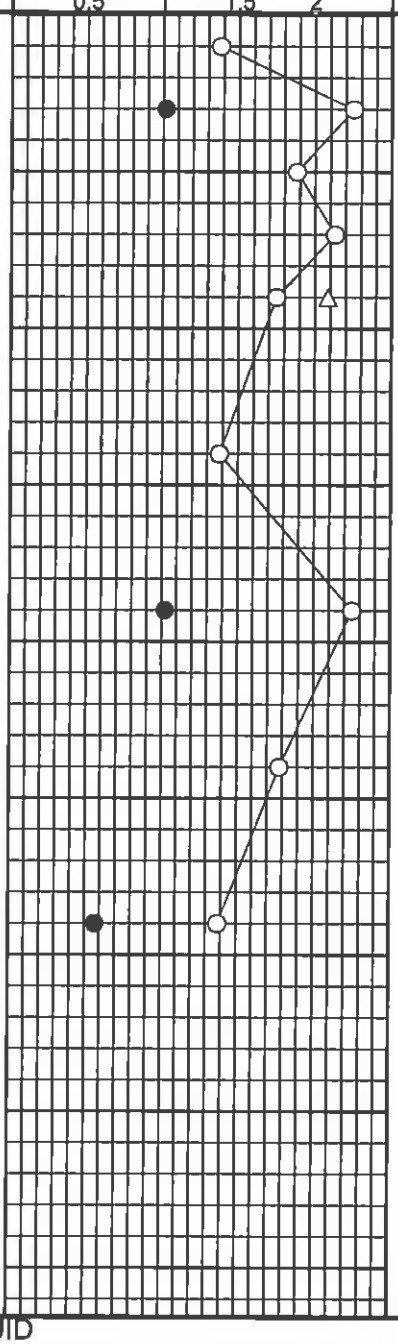

△ Confined Compression
● Unconfined Compression
○ Pocket Penetrometer
□ Torvane

BORING DRILLED TO **22** FEET WITHOUT DRILLING FLUID
WATER ENCOUNTERED AT **22** FEET WHILE DRILLING
WATER LEVEL AT **13.3** FEET AFTER **1/4 HR**
DRILLED BY **V&S** CHECKED BY **WW** LOGGED BY **RJM**

PROJECT NO. G137-10

AVILES ENGINEERING CORP.
GEOTECHNICAL ENGINEERS

PROJECT: **SWTP Contract 74A-1 Waterline** BORING **B-5**

DATE **7/15/10** TYPE **4" Dry Auger/Wet Rotary** LOCATION **See Boring Location Plan**

DEPTH IN FEET	DESCRIPTION (Approximate Station: 55+05, Offset: 18 L)	S.P.T. BLOWS / FT	MOISTURE CONTENT, %	DRY DENSITY, PCF	-200 MESH	LIQUID LIMIT	PLASTIC LIMIT	PLASTICITY INDEX
0	Fill: very stiff, dark gray Fat Clay w/Sand (CH), with calcareous nodules, shell and roots		19		76	50	16	34
	Fill: very stiff to hard, dark gray Sandy Lean Clay (CL), with ferrous stains and calcareous nodules		16	104				
6	Very stiff, light gray and tan Lean Clay w/ Sand (CL), with calcareous nodules and ferrous stains		18					
	-brown and light gray 6'-8'		18		87	44	15	29
	Stiff to very stiff, reddish brown and light gray Fat Clay (CH), with calcareous nodules and ferrous stains		24	99				
12	Very stiff, tan and light gray Lean Clay w/ Sand (CL), with ferrous stains		18	106	84	46	14	32
18	Very stiff to hard, tan and light gray Sandy Lean Clay (CL), with abundant calcareous nodules	30	16		52	28	12	16
24	-with sand pockets and ferrous stains 23'-25'		12	116				
	Very dense, light gray Silty Sand (SM)							
30	-with clayey sand layer 29'-30'	58	19					
	Termination Depth = 30 feet.							
36								

SHEAR STRENGTH, TSF

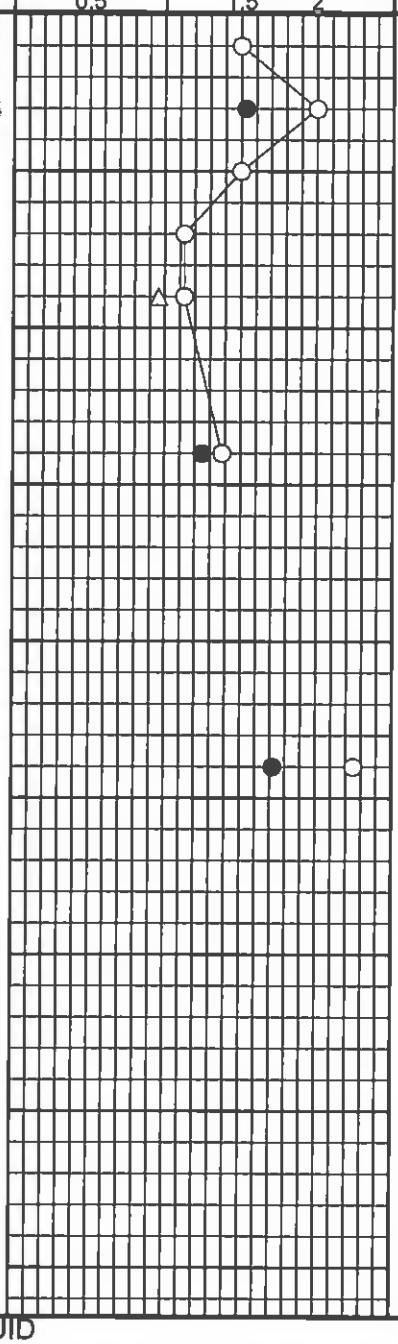

△ Confined Compression
● Unconfined Compression
○ Pocket Penetrometer
□ Torvane

BORING DRILLED TO **18** FEET WITHOUT DRILLING FLUID
WATER ENCOUNTERED AT **17** FEET WHILE DRILLING
WATER LEVEL AT **12** FEET AFTER **1/4 HR**
DRILLED BY **V&S** CHECKED BY **WW** LOGGED BY **RJM**

PROJECT NO. G137-10

AVILES ENGINEERING CORP.
GEOTECHNICAL ENGINEERS

PROJECT: **SWTP Contract 74A-1 Waterline** BORING **B-6**

DATE **8-19-10** TYPE **4" Wet Rotary** LOCATION **See Boring Location Plan**

DEPTH IN FEET	SYMBOL	SAMPLE INTERVAL	DESCRIPTION (Approximate Station: 52+60, Offset: 60 R)	S.P.T. BLOWS / FT.	MOISTURE CONTENT, %	DRY DENSITY, PCF	-200 MESH	LIQUID LIMIT	PLASTIC LIMIT	PLASTICITY INDEX
0			Fill: hard, tan and gray Fat Clay w/Sand (CH), with ferrous stains -with roots and sand layers 0'-2' -with sand pockets 2'-4'		21					
					19		75	72	18	54
			Tan and light gray Clayey Sand (SC), with abundant calcareous nodules -with siltstone fragments 6'-10'		15	113				
6					20		45	46	16	30
					19	105				
12			Very stiff, tan and light gray Lean Clay w/ Sand (CL), with calcareous nodules		20		76	44	12	32
18			-brown and gray 18'-20'		21	105				
			Light gray and tan Clayey Sand (SC), with calcareous nodules							
24					15		49	23	14	9
			Very stiff to hard, reddish brown and light gray Sandy Lean Clay (CL), with silt seams and siltstone fragments		16	113	65	27	12	15
30										
					13					
36			Termination Depth = 35 Feet							

SHEAR STRENGTH, TSF

△ Confined Compression
● Unconfined Compression
○ Pocket Penetrometer
□ Torvane

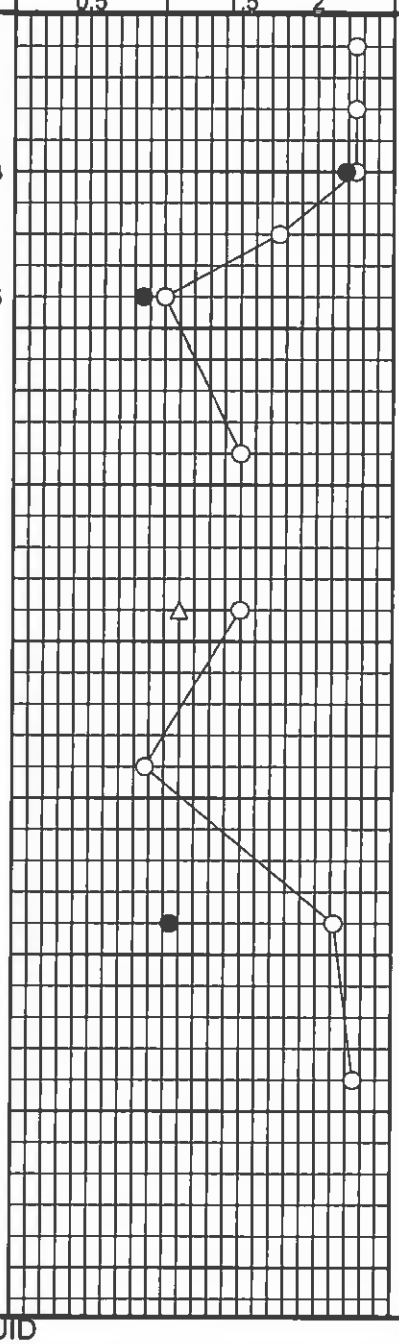

BORING DRILLED TO **25** FEET WITHOUT DRILLING FLUID
WATER ENCOUNTERED AT **25** FEET WHILE DRILLING ▽
WATER LEVEL AT **11.6** FEET AFTER **1/4 HR** ▼
DRILLED BY **V&S** CHECKED BY **WW** LOGGED BY **AEC**

PROJECT NO. G137-10

AVILES ENGINEERING CORP. GEOTECHNICAL ENGINEERS

PROJECT: **SWTP Contract 74A-1 Waterline** BORING **B-6A**

DATE **9/28/10** TYPE **4" Wet Rotary** LOCATION **See Boring Location Plan**

DEPTH IN FEET	SYMBOL	SAMPLE INTERVAL	DESCRIPTION (Approximate Station: 52+55, Offset: 55 R)	S P T BLOWS / FT.	MOISTURE CONTENT, %	DRY DENSITY, PCF	-200 MESH	LIQUID LIMIT	PLASTIC LIMIT	PLASTICITY INDEX
0			Fill: hard, gray and brown Sandy Lean Clay (CL), with roots and calcareous nodules		13		66	37	13	24
			Stiff to hard, dark gray Lean Clay w/Sand (CL), with calcareous nodules and ferrous stains		19	108				
			-with siltstone fragments 2'-4'		14		73	41	15	26
6			-light gray and tan 4'-10'							
			-with siltstone fragments 6'-10'		19	107				
			-with fat clay pockets 8'-10'	18	16		76			
12			Very stiff, light gray and tan Fat Clay w/Sand (CH), with ferrous stains		18		78	57	16	41
			Very stiff, light gray and tan Lean Clay w/ Sand (CL), with ferrous stains		20	108				
					20		82	44	13	31
			-with siltstone fragments 16'-18'		20	107				
18			Stiff to very stiff, light gray, tan, and red Lean Clay (CL), with siltstone fragments and calcareous nodules		20		90	38	17	21
			-reddish brown and light gray 20'-24'		17					
					20	106				
24			Stiff to very stiff, light gray and tan Sandy Lean Clay (CL), with ferrous stains	15	15		53	22	13	9
				20	14					
			Medium dense, light gray and tan Clayey Sand (SC), with ferrous stains	32	18		24			
30										
				41	21					
36										
			-with silty sand seams 38'-40'	40	22		19			
			Termination Depth = 40 Feet							

SHEAR STRENGTH, TSF

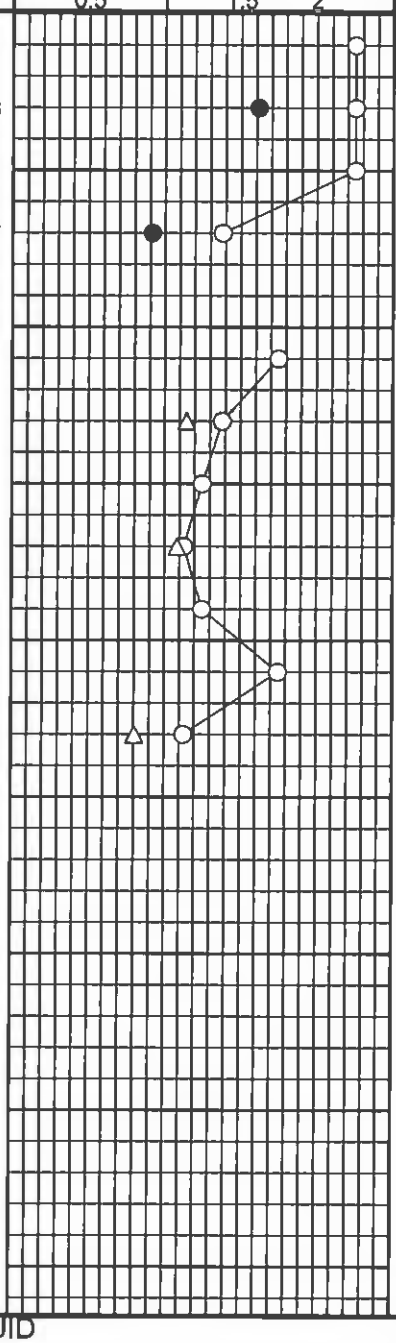

BORING DRILLED TO **28** FEET WITHOUT DRILLING FLUID

WATER ENCOUNTERED AT **28** FEET WHILE DRILLING

WATER LEVEL AT **16.7** FEET AFTER **1/4 HR**

DRILLED BY **V&S** CHECKED BY **WW** LOGGED BY **V&S**

PROJECT NO. G137-10

AVILES ENGINEERING CORP.
GEOTECHNICAL ENGINEERS

PROJECT: **SWTP Contract 74A-1 Waterline** BORING **B-7A**

DATE **9/28/10** TYPE **4" Wet Rotary** LOCATION **See Boring Location Plan**

DEPTH IN FEET	SYMBOL	SAMPLE INTERVAL	DESCRIPTION (Approximate Station: 50+65, Offset: 35 R)	S P T. BLOWS / FT	MOISTURE CONTENT, %	DRY DENSITY, PCF	-200 MESH	LIQUID LIMIT	PLASTIC LIMIT	PLASTICITY INDEX
0			Fill: hard dark gray Lean Clay w/Sand (CL), with calcareous nouldes and ferrous stains -with roots 0'-2' -gray and tan, with vertical sand seams 2'-4'		13		71	45	12	33
					12	111				
6			Stiff to hard, tan Fat Clay (CH), with calcareous nodules and ferrous stains -with siltstone fragments 4'-8' -tan and light gray 6'-12'		21		86	61	15	46
					20	109				
					20		92	51	15	36
12			-reddish brown and light gray 12'-16'		15	113				
					28		94	65	20	45
					30	95				
18			Stiff to very stiff, light gray and tan Lean Clay w/Sand (CL), with ferrous stains		21		79	46	13	33
					20	107				
					20		75	43	13	30
			-reddish brown and light gray, with siltstone fragments and calcareous nodules 22'-24'		26	100				
24			Very stiff, light gray and tan Clayey Silt (ML) with abundant sand seams	19	15		51			
				25	16					
30			Very stiff to hard, light gray and tan Sandy Lean Clay (CL), with calcareous nodules and ferrous stains		14	113				
					12		52	33	12	21
36			Termination Depth = 35 Feet							

SHEAR STRENGTH, TSF

△ Confined Compression
● Unconfined Compression
○ Pocket Penetrometer
□ Torvane

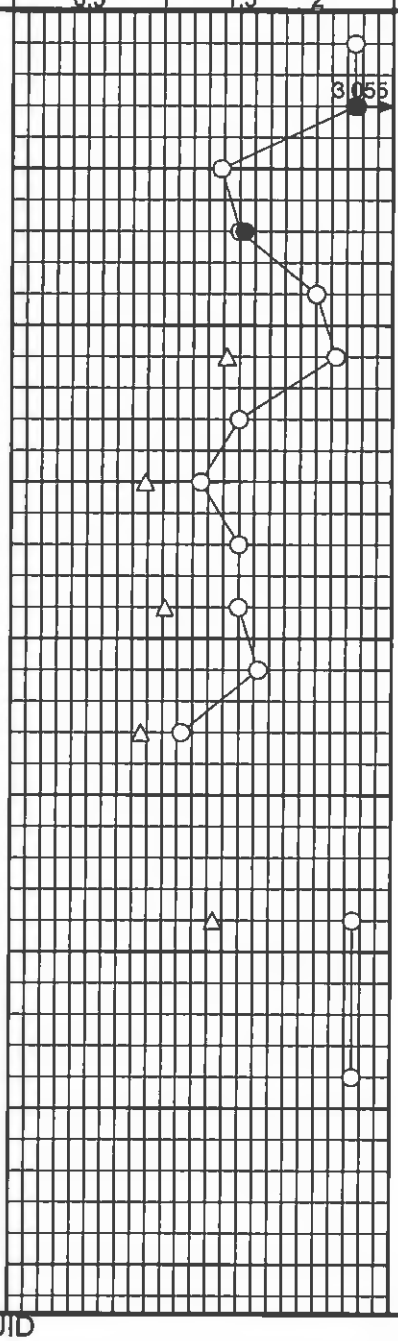

BORING DRILLED TO **25** FEET WITHOUT DRILLING FLUID
WATER ENCOUNTERED AT **25** FEET WHILE DRILLING ▽
WATER LEVEL AT **21.5** FEET AFTER **1/4 HR** ▼
DRILLED BY **V&S** CHECKED BY **WW** LOGGED BY **V&S**

AVILES ENGINEERING CORP.
GEOTECHNICAL ENGINEERS

PROJECT: **SWTP Contract 74A-1 Waterline** BORING **B-7**

DATE **8-19-10** TYPE **4" Dry Auger** LOCATION **See Boring Location Plan**

DEPTH IN FEET	SYMBOL	SAMPLE INTERVAL	DESCRIPTION (*Approximate* Station: 47+62.63 Offset: 105.21 R)	S.P.T. BLOWS / FT.	MOISTURE CONTENT, %	DRY DENSITY, PCF	-200 MESH	LIQUID LIMIT	PLASTIC LIMIT	PLASTICITY INDEX
0			Fill: very stiff, dark gray Fat Clay w/Sand (CH), with calcareous nodules		18		78	58	16	42
			-gray, with siltstone fragments 2'-4'		21	104				
			Very stiff to hard, light gray and tan Sandy Lean Clay (CL), with abundant calcareous nodules and abundant siltstone fragments		19					
6					18		57	47	14	33
			Stiff to very stiff, brown, gray, and tan Lean Clay w/Sand (CL)		23	102				
			-with abundant siltstone fragments 8'-10'							
12			-light gray and tan 13'-15'		18		76	41	11	30
18			Firm to very stiff, light gray and tan Sandy Lean Clay (CL)		20	104				
24			-with silt seams 23'-25'		17	114				
			Termination Depth = 25 Feet							
30										
36										

SHEAR STRENGTH, TSF

△ Confined Compression
● Unconfined Compression
○ Pocket Penetrometer
□ Torvane

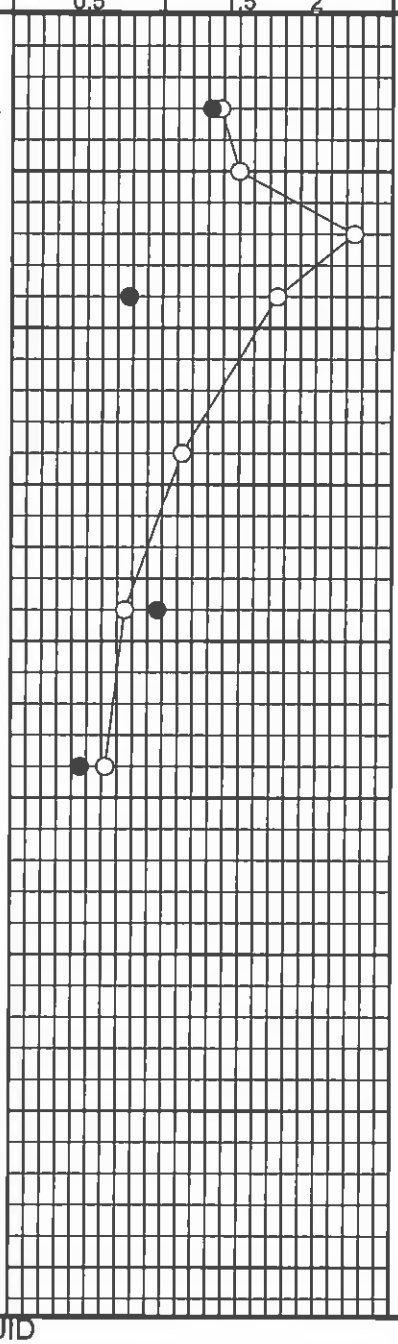

BORING DRILLED TO **25** FEET WITHOUT DRILLING FLUID
WATER ENCOUNTERED AT **25** FEET WHILE DRILLING ▽
WATER LEVEL AT **14.5** FEET AFTER **1/4 HR** ▼
DRILLED BY **V&S** CHECKED BY **WW** LOGGED BY **AEC**

PROJECT NO. G137-10

PLATE A-9a

AVILES ENGINEERING CORP.
GEOTECHNICAL ENGINEERS

PROJECT: **SWTP Contract 74A-1 Waterline** BORING **B-8**

DATE **6/25/10** TYPE **4" Dry Auger** LOCATION **See Boring Location Plan**

DEPTH IN FEET	SYMBOL	SAMPLE INTERVAL	DESCRIPTION (*Approximate* Station: 39+96.08 Offset: 3.06 L)	S.P.T. BLOWS / FT	MOISTURE CONTENT, %	DRY DENSITY, PCF	-200 MESH	LIQUID LIMIT	PLASTIC LIMIT	PLASTICITY INDEX
0			Pavement: 7.5" Concrete							
			Stiff to very stiff, tan and light gray Sandy Lean Clay (CL), with ferrous stains		16		52	44	13	31
			-with siltstone fragments 0'-2', and calcareous nodules 0'-4'		19	109				
					21					
6			-tan, red, and light gray 6'-8'		21	108				
			Loose, tan and light gray Clayey Sand (SC) -with ferrous stains 8'-10'		16		49	29	14	15
12			-tan 13'-15'	4	18		42			
18			Very stiff, reddish brown and light gray Fat Clay (CH), with siltstone fragments and calcareous nodules		33		98	71	25	46
24			Very stiff, tan and light gray Sandy Lean Clay (CL)		19	110				
			Termination Depth = 25 Feet							
30										
36										

SHEAR STRENGTH, TSF

△ Confined Compression
● Unconfined Compression
○ Pocket Penetrometer
□ Torvane

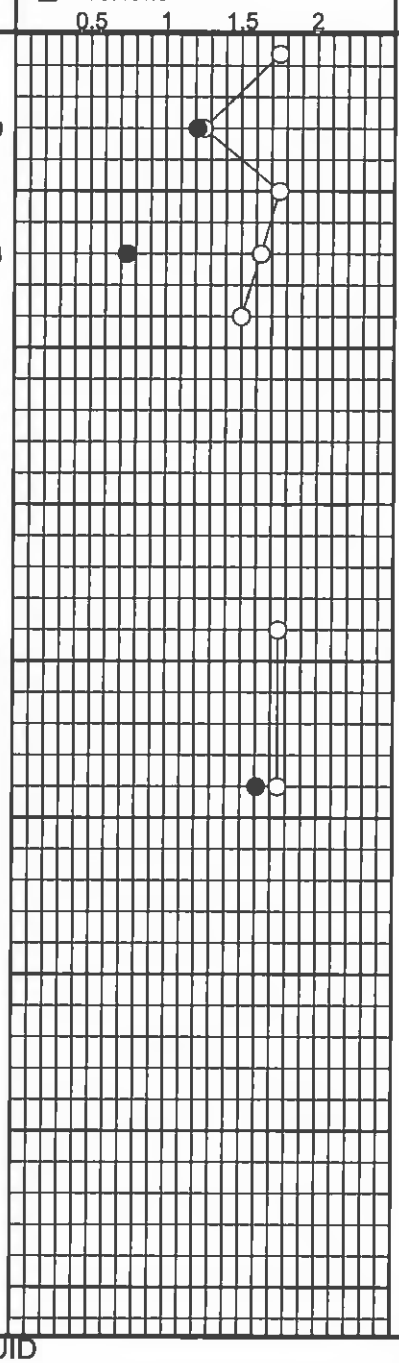

BORING DRILLED TO **25** FEET WITHOUT DRILLING FLUID
WATER ENCOUNTERED AT **n/a** FEET WHILE DRILLING
WATER LEVEL AT **n/a** FEET AFTER **Complete**
DRILLED BY **V&S** CHECKED BY **WW** LOGGED BY **RJM**

PROJECT NO. G137-10

AVILES ENGINEERING CORP.
GEOTECHNICAL ENGINEERS

PROJECT: **SWTP Contract 74A-1 Waterline** BORING **B-9**

DATE **6/25/10** TYPE **4" Dry Auger** LOCATION **See Boring Location Plan**

DEPTH IN FEET	SYMBOL	SAMPLE INTERVAL	DESCRIPTION (Approximate Station: 31+42.85, Offset: 6.97 L)	S.P.T. BLOWS / FT	MOISTURE CONTENT, %	DRY DENSITY, PCF	-200 MESH	LIQUID LIMIT	PLASTIC LIMIT	PLASTICITY INDEX
0			Pavement: 6" Concrete							
			Fill: lime-stabilized dark gray Sandy Lean Clay (CL), with shell		31					
			Very stiff, gray Lean Clay w/Sand (CL), with calcareous nodules and ferrous stains		18		72	48	15	33
6			-tan and light gray, with abundant siltstone fragments 2'-4'		18	108				
			-reddish brown and light gray, with abundant calcareous nodules 6'-8'		18					
			Stiff to very stiff, reddish brown and light gray Fat Clay (CH), with slickensides and calcareous nodules		22	100				
12					28		100	63	23	40
18			Very stiff, tan and light gray Sandy Lean Clay (CL), with calcareous nodules and ferrous stains		17	109				
24			Very stiff, reddish brown and light gray Lean Clay (CL)		24		86	48	14	34
			-light gray and tan 28'-30'		20	107				
30			Termination Depth = 30 Feet							
36										

SHEAR STRENGTH, TSF

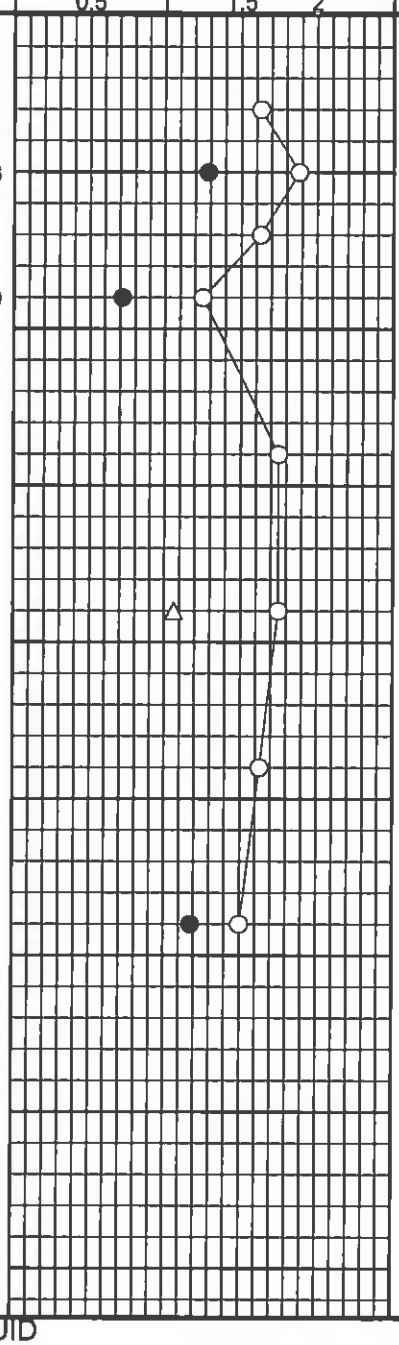

△ Confined Compression
● Unconfined Compression
○ Pocket Penetrometer
□ Torvane

BORING DRILLED TO **30** FEET WITHOUT DRILLING FLUID
WATER ENCOUNTERED AT **n/a** FEET WHILE DRILLING
WATER LEVEL AT **n/a** FEET AFTER **Complete**
DRILLED BY **V&S** CHECKED BY **WW** LOGGED BY **RJM**

PROJECT NO. G137-10

AVILES ENGINEERING CORP.
GEOTECHNICAL ENGINEERS

PROJECT: **SWTP Contract 74A-1 Waterline** BORING **B-10**

DATE **6/30/10** TYPE **4" Dry Auger** LOCATION **See Boring Location Plan**

DEPTH IN FEET	SYMBOL	SAMPLE INTERVAL	DESCRIPTION (*Approximate* Station: 22+42.39 Offset: 11.00 R)	S.P.T. BLOWS / FT.	MOISTURE CONTENT, %	DRY DENSITY, PCF	-200 MESH	LIQUID LIMIT	PLASTIC LIMIT	PLASTICITY INDEX
0			Pavement: 6" Concrete							
			Fill: stiff, dark gray Fat Clay w/Sand (CH), with calcareous nodules and ferrous stains		25		82	64	17	47
			Stiff to very stiff, light gray and tan Lean Clay (CL), with sand seams, abundant calcareous nodules, and abundant siltstone fragments		18	107				
6					19					
			-reddish brown and light gray 6'-8'		21		94	45	14	31
			Stiff to very stiff, reddish brown and light gray Fat Clay (CH), with calcareous nodules		32	91				
12					31		100	70	22	48
18			Stiff to very stiff, light gray and tan Sandy Lean Clay (CL), with calcareous nodules		22	101				
24					21					
			Termination Depth = 25 Feet							
30										
36										

SHEAR STRENGTH, TSF

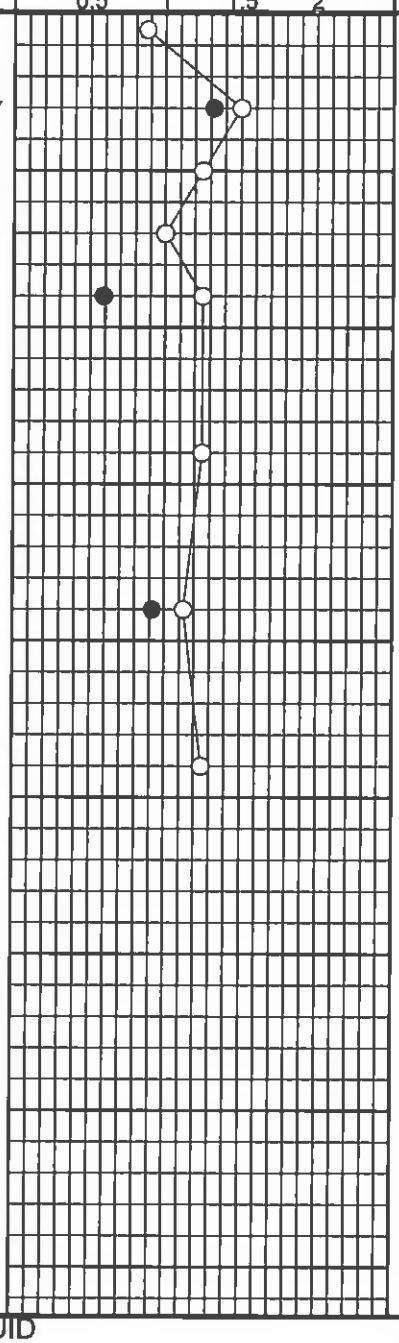

△ Confined Compression
● Unconfined Compression
○ Pocket Penetrometer
□ Torvane

BORING DRILLED TO **30** FEET WITHOUT DRILLING FLUID
WATER ENCOUNTERED AT **n/a** FEET WHILE DRILLING
WATER LEVEL AT **n/a** FEET AFTER **Complete**
DRILLED BY **V&S** CHECKED BY **WW** LOGGED BY **RJM**

PROJECT NO. G137-10

AVILES ENGINEERING CORP.
GEOTECHNICAL ENGINEERS

PROJECT: **SWTP Contract 74A-1 Waterline** BORING **B-11**

DATE **6/25/10** TYPE **4" Dry Auger** LOCATION **See Boring Location Plan**

DEPTH IN FEET	SYMBOL	SAMPLE INTERVAL	DESCRIPTION	S.P.T. BLOWS / FT.	MOISTURE CONTENT, %	DRY DENSITY, PCF	-200 MESH	LIQUID LIMIT	PLASTIC LIMIT	PLASTICITY INDEX
0			Pavement: 5" Concrete							
			Fill: stiff to very stiff Fat Clay (CH)		33		90	67	21	46
			Stiff to very stiff, dark gray Fat Clay (CH), with slickensides, calcareous nodules, and ferrous stains		29	92				
			-gray and tan 4'-6'		26					
6			-with siltstone fragments 6'-8'		22		87	58	15	43
			-reddish brown and light gray 8'-15', with abundant siltstone fragments and calcareous nodules 8'-10'		28	99				
12					21	104				
18			Very stiff to hard, tan and light gray Lean Clay w/Sand (CL), with calcareous nodules -with ferrous stains 18'-20'		20		82	44	14	30
24					20	106				
			Termination Depth = 25 Feet							
30										
36										

Approximate
Station: 12+79.15
Offset: 9.45 R

SHEAR STRENGTH, TSF

△ Confined Compression
● Unconfined Compression
○ Pocket Penetrometer
□ Torvane

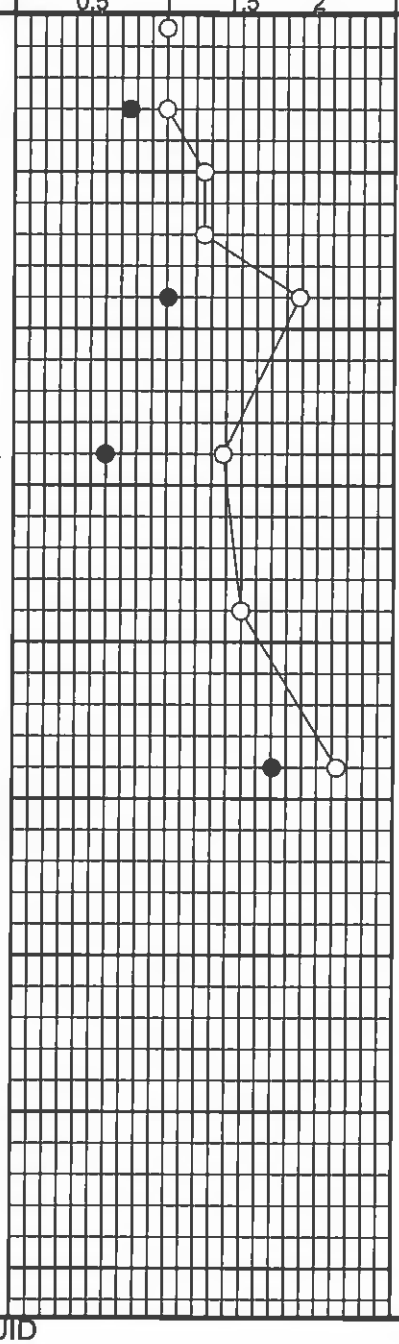

BORING DRILLED TO **25** FEET WITHOUT DRILLING FLUID
WATER ENCOUNTERED AT **n/a** FEET WHILE DRILLING
WATER LEVEL AT **n/a** FEET AFTER **Complete**
DRILLED BY **V&S** CHECKED BY **WW** LOGGED BY **RJM**

AVILES ENGINEERING CORP.
GEOTECHNICAL ENGINEERS

PROJECT: **SWTP Contract 74A-1 Waterline** BORING **B-12**

DATE **6/25/10** TYPE **4" Dry Auger** LOCATION **See Boring Location Plan**

DEPTH IN FEET	SYMBOL	SAMPLE INTERVAL	DESCRIPTION (Approximate Station: 2+54.06, Offset: 5.97 R)	S.P.T. BLOWS / FT.	MOISTURE CONTENT, %	DRY DENSITY, PCF	-200 MESH	LIQUID LIMIT	PLASTIC LIMIT	PLASTICITY INDEX
0			Pavement: 5" Concrete		24		72	60	16	44
			Stiff to very stiff, dark gray Fat Clay w/Sand (CH), with calcareous nodules and ferrous stains		21					
6			Stiff to very stiff, light gray and tan Sandy Lean Clay (CL), with calcareous nodules and ferrous stains -with siltstone fragments 4'-6'		20	109				
					19		58	44	15	29
					21	103	60			
12			Tan and light gray Silty Clayey Sand (SC-SM)		21		23	23	17	6
18			Tan and light gray Clayey Sand (SC)		21	103	49			
24			Very stiff, tan and light gray Sandy Lean Clay (CL)		20					
			Termination Depth = 30 Feet							
30										
36										

SHEAR STRENGTH, TSF

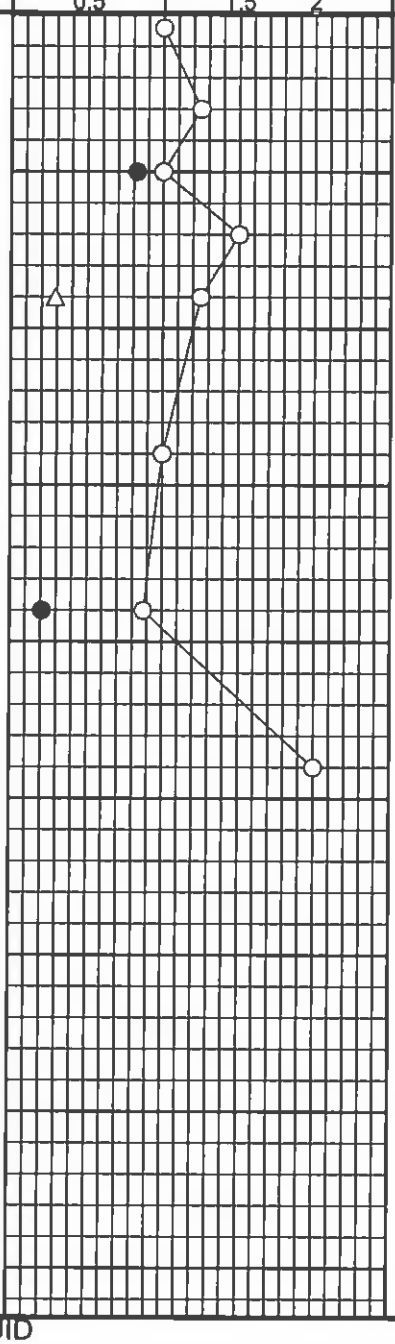

△ Confined Compression
● Unconfined Compression
○ Pocket Penetrometer
□ Torvane

BORING DRILLED TO **25** FEET WITHOUT DRILLING FLUID
WATER ENCOUNTERED AT **n/a** FEET WHILE DRILLING
WATER LEVEL AT **n/a** FEET AFTER **Complete**
DRILLED BY **V&S** CHECKED BY **WW** LOGGED BY **RJM**

PROJECT NO. G137-10

KEY TO SYMBOLS

Symbol	Description
Strata symbols	
	Fill
	High plasticity clay
	Low plasticity clay
	Silty sand
	Clayey sand
	Paving
	Poorly graded silty clayey sand
Soil Samplers	
	Shelby Tube sampler
	Standard penetration test
Misc Symbols	
	Groundwater encountered during drilling
	Groundwater measured after drilling
○	Shear strength; pocket penetrometer
●	Shear strength; unconfined compression
△	Shear strength; confined compression

ENGINEERING CORP.

CLASSIFICATION OF SOILS FOR ENGINEERING PURPOSES

ASTM Designation D-2487

MAJOR DIVISIONS				GROUP SYMBOL	TYPICAL NAMES
COARSE-GRAINED SOILS (Less than 50% passes No. 200 sieve)	GRAVELS (Less than 50% of coarse fraction passes No. 4 sieve)	CLEAN GRAVELS (Less than 5% passes No. 200 sieve)		GW	Well-graded gravel, well-graded gravel with sand
				GP	Poorly-graded gravel, poorly-graded gravel with sand
		GRAVELS WITH FINES (More than 12% passes No. 200 sieve)	Limits plot below "A" line & hatched zone on plasticity chart	GM	Silty gravel, silty gravel with sand
			Limits plot above "A" line & hatched zone on plasticity chart	GC	Clayey gravel, clayey gravel with sand
	SANDS (50% or more of coarse fraction passes No. 4 sieve)	CLEAN SANDS (Less than 5% passes No. 200 sieve)		SW	Well-graded sand, well-graded sand with gravel
				SP	Poorly-graded sand, poorly-graded sand with gravel
		SANDS WITH FINES (More than 12% passes No. 200 sieve)	Limits plot below "A" line & hatched zone on plasticity chart	SM	Silty sand, silty sand with gravel
			Limits plot above "A" line & hatched zone on plasticity chart	SC	Clayey sand, clayey sand with gravel
FINE-GRAINED SOILS (50% or more passes No. 200 sieve)		SILTS AND CLAYS (Liquid Limit Less Than 50%)		ML	Silt, silt with sand, silt with gravel, sandy silt, gravelly silt
				CL	Lean clay, lean clay with sand, lean clay with gravel, sandy lean clay, gravelly lean clay
				OL	Organic clay, organic clay with sand, sandy organic clay, organic silt, sandy organic silt
		SILTS AND CLAYS (Liquid Limit 50% or More)		MH	Elastic silt, elastic silt with sand, sandy elastic silt, gravelly elastic silt
				CH	Fat clay, fat clay with sand, fat clay with gravel, sandy fat clay, gravelly fat clay
				OH	Organic clay, organic clay with sand, sandy organic clay, organic silt, sandy organic silt

NOTE: Coarse soils between 5% and 12% passing the No. 200 sieve and fine-grained soils with limits plotting in the hatched zone of the plasticity chart are to have dual symbols.

PLASTICITY CHART

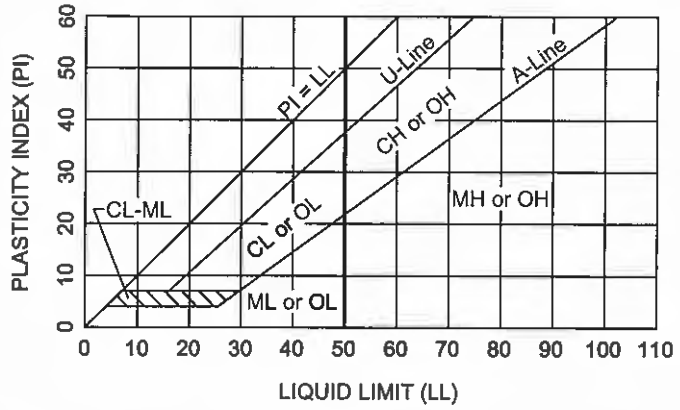

Equation of A-Line: Horizontal at PI=4 to LL=25.5, then PI=0.73(LL-20)

Equation of U-Line: Vertical at LL=16 to PI=7, then PI=0.9(LL-8)

DEGREE OF PLASTICITY OF COHESIVE SOILS

Degree of Plasticity	Plasticity Index
None	0 - 4
Slight	5 - 10
Medium	11 - 20
High	21 - 40
Very High	>40

SOIL SYMBOLS

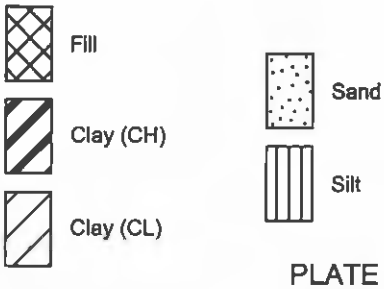

PLATE A-16

AMLES ENGINEERING CORP.

TERMS USED ON BORING LOGS

SOIL GRAIN SIZE

U.S. STANDARD SIEVE

6"	3"	3/4"	#4	#10	#40	#200		
BOULDERS	COBBLES	GRAVEL		SAND			SILT	CLAY
		COARSE	FINE	COARSE	MEDIUM	FINE		
152	76.2	19.1	4.76	2.00	0.420	0.074	0.002	

SOIL GRAIN SIZE IN MILLIMETERS

STRENGTH OF COHESIVE SOILS

Consistency	Undrained Shear Strength, Kips per Sq. ft.
Very Soft	less than 0.25
Soft	0.25 to 0.50
Firm	0.50 to 1.00
Stiff	1.00 to 2.00
Very Stiff	2.00 to 4.00
Hard	greater than 4.00

RELATIVE DENSITY OF COHESIONLESS SOILS FROM STANDARD PENETRATION TEST

Very Loose	<4 bpf
Loose	5-10 bpf
Medium Dense	11-30 bpf
Dense	31-50 bpf
Very Dense	>50 bpf

SPLIT-BARREL SAMPLER DRIVING RECORD

Blows per Foot	Description
25	25 blows driving sampler 12 inches, after initial 6 inches of seating.
50/7"	50 blows driving sampler 7 inches, after initial 6 inches of seating.
Ref/3"	50 blows driving sampler 3 inches, during initial 6-inches seating interval.

NOTE: To avoid change to sampling tools, driving is limited to 50 blows during or after seating interval.

DRY STRENGTH ASTM D2488

None	Dry specimen crumbles into powder with mere pressure of handling
Low	Dry specimen crumbles into powder with some finger pressure
Medium	Dry specimen breaks into pieces or crumbles with considerable pressure
High	Dry specimen cannot be broken with finger pressure, it can be broken between thumb and hard surface
Very High	Dry specimen cannot be broken between thumb and hard surface

MOISTURE CONDITION ASTM D2488

Dry	Absence of moisture, dusty, dry to the touch
Moist	Damp but no visible water
Wet	Visible free water

SOIL STRUCTURE

Slickensided	Having planes of weakness that appear slick and glossy. The degree of slickensidedness depends upon the spacing of slickensides and the easiness of breaking along these planes.
Fissured	Containing shrinkage or relief cracks, often filled with fine sand or silt; usually more or less vertical.
Pocket	Inclusion of material of different texture that is smaller than the diameter of the sample.
Parting	Inclusion less than 1/8 inch thick extending through the sample.
Seam	Inclusion 1/8 inch to 3 inches thick extending through the sample.
Layer	Inclusion greater than 3 inches thick extending through the sample.
Laminated	Soil sample composed of alternating partings or seams of different soil types.
Interlayered	Soil sample composed of alternating layers of different soil types.
Intermixed	Soil sample composed of pockets of different soil types and layered or laminated structure is not evident.
Calcareous	Having appreciable quantities of calcium material.

AVILES ENGINEERING CORP.

ASTM & TXDOT DESIGNATION FOR SOIL LABORATORY TESTS

NAME OF TEST	ASTM TEST DESIGNATION	TXDOT TEST DESIGNATION
Moisture Content	D 2216	Tex-103-E
Specific Gravity	D 854	Tex-108-E
Sieve Analysis	D 421 D 422	Tex-110-E (Part 1)
Hydrometer Analysis	D 422	Tex-110-E (Part 2)
Minus No. 200 Sieve	D 1140	Tex-111-E
Liquid Limit	D 4318	Tex-104-E
Plastic Limit	D 4318	Tex-105-E
Shrinkage Limit	D 427	Tex-107-E
Standard Proctor Compaction	D 698	Tex-114-E
Modified Proctor Compaction	D 1557	Tex-113-E
Permeability (constant head)	D 2434	-
Consolidation	D 2435	-
Direct Shear	D 3080	-
Unconfined Compression	D 2166	-
Unconsolidated-Undrained Triaxial	D 2850	Tex-118-E
Consolidated-Undrained Triaxial	D 4767	Tex-131-E
Pinhole Test	D 4647	-
California Bearing Ratio	D 1883	-
Unified Soil Classification System	D 2487	Tex-142-E

AVILES ENGINEERING CORP.

APPENDIX B

Plates B-1 and B-2	Generalized Soil Profile
Plates B-3 thru B-5	Piezometer Installation Details

GENERALIZED SUBSURFACE SOIL PROFILE

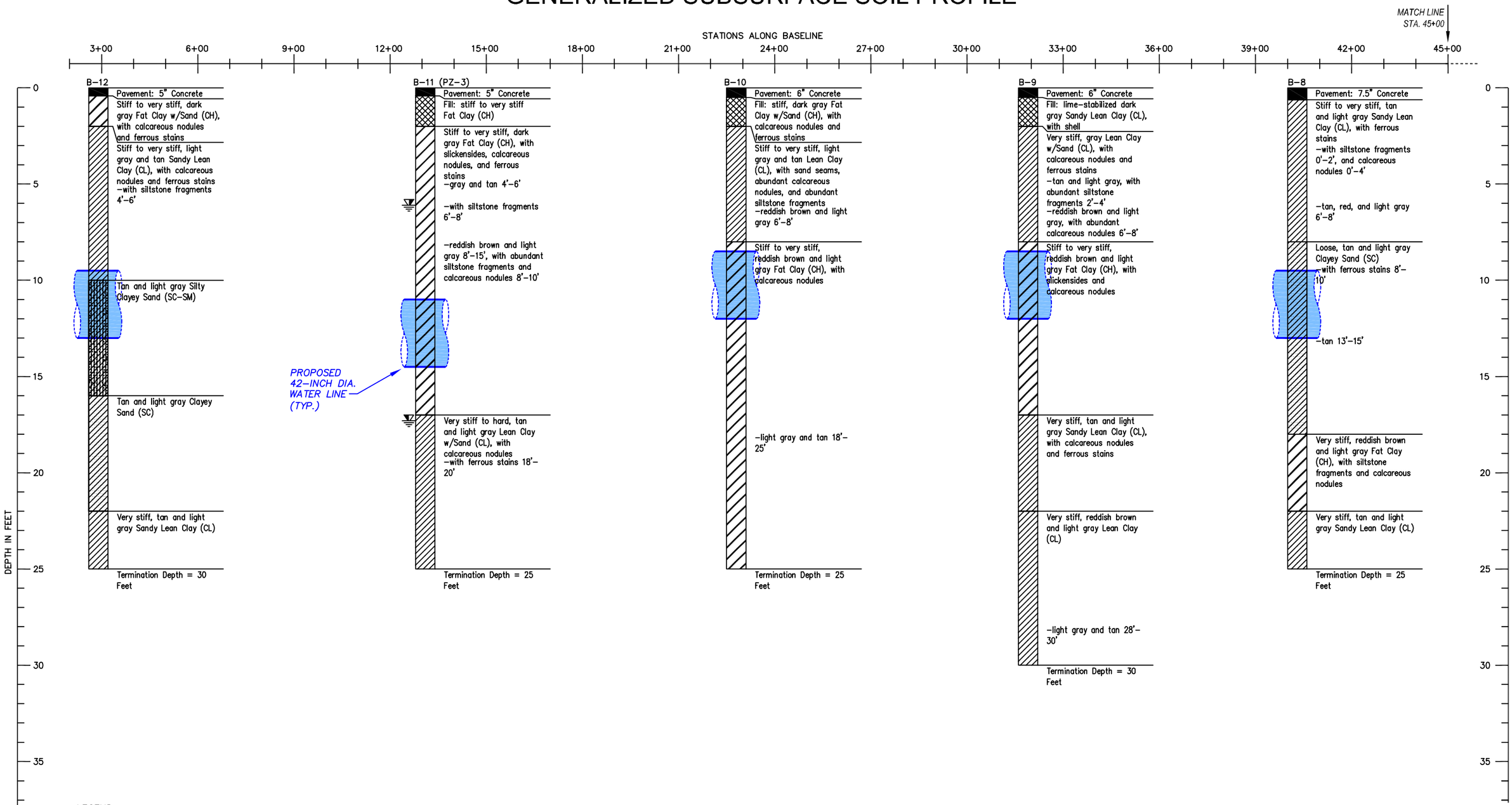

LEGEND:

- Pavement
- Fill
- High plasticity clay
- Low plasticity clay
- Silty sand
- Poorly graded silty clayey sand
- Clayey sand
- Approx proposed water line invert depth and diameter near each boring indicated
- Depth of water encountered during drilling
- Depth of water 15 min. after initial encounter
- Depth of water in piezometer; first reading
- Depth of water in piezometer; second reading

NOTES:

1. SOIL STRATIGRAPHY AND SECONDARY SOIL STRUCTURE (SUCH AS SEAMS, LAYERS, OR POCKETS OF SANDS, SILTS, SLICKENSIDES, AND FISSURES) THAT ARE DIFFERENT FROM WHAT WERE IDENTIFIED IN THE ACTUAL BORINGS MAY EXIST AWAY FROM THESE BORINGS.
2. SURVEY DATA NOT AVAILABLE; BORING STATIONS ARE APPROXIMATE, AND BORING ELEVATIONS ARE ASSUMED TO BE THE SAME.

AVILES ENGINEERING CORPORATION

GENERALIZED SOIL PROFILE

CITY OF HOUSTON S.W.T.P. CONTRACT 74A-1 WATERLINE

WBS NO. S-000900-0109-3

HOUSTON, TEXAS

AEC PROJECT NO.: G137-10	DATE: 12-03-10	SOURCE DRAWING PROVIDED BY: AVILES ENGINEERING CORP.
VERTICAL SCALE: 1" = 5' HORIZONTAL SCALE: 1" = 300'	DRAFTED BY: BpJ	PLATE NO.: PLATE B-1

GENERALIZED SUBSURFACE SOIL PROFILE

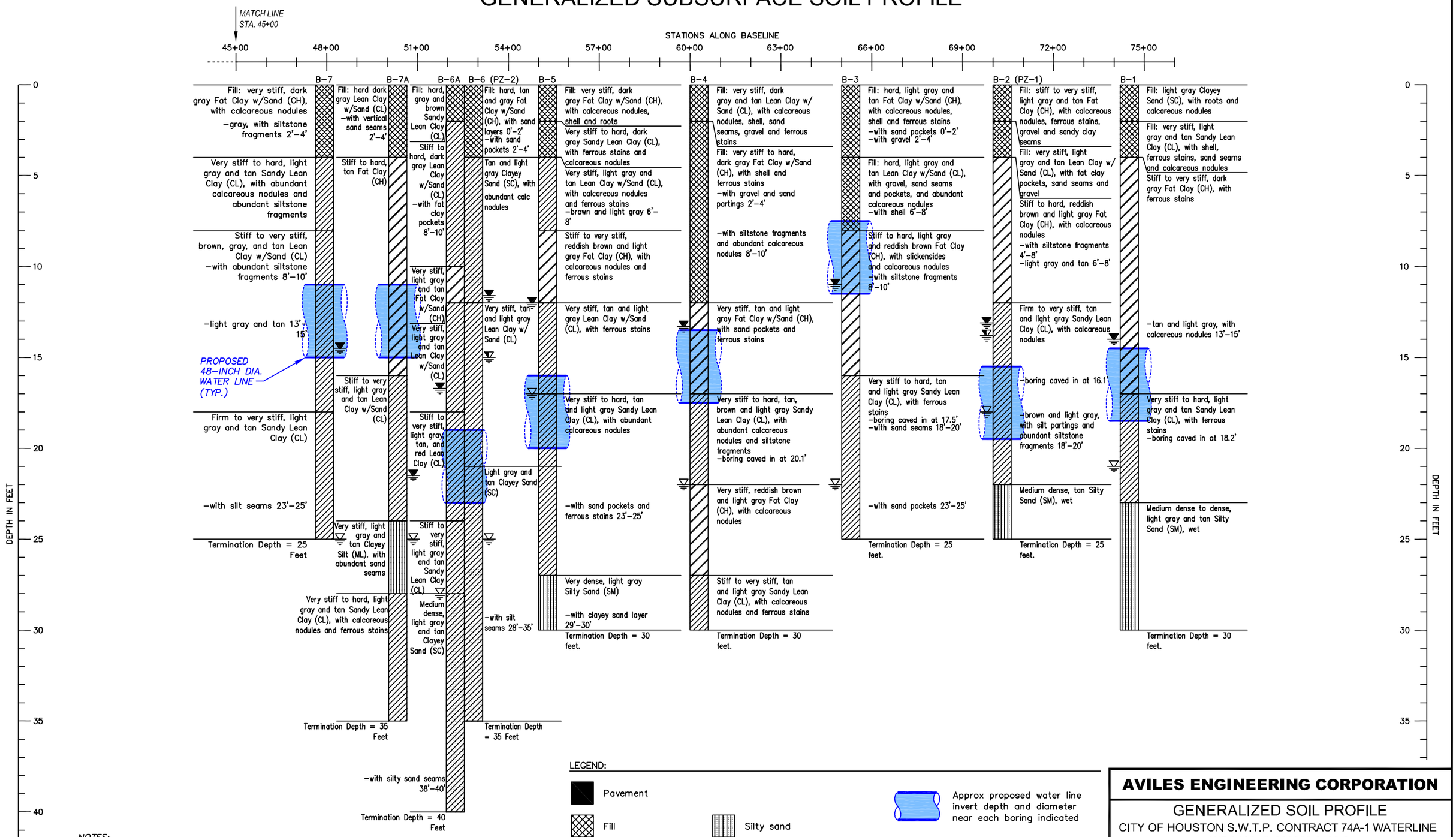

NOTES:

1. SOIL STRATIGRAPHY AND SECONDARY SOIL STRUCTURE (SUCH AS SEAMS, LAYERS, OR POCKETS OF SANDS, SILTS, SLICKENSIDES, AND FISSURES) THAT ARE DIFFERENT FROM WHAT WERE IDENTIFIED IN THE ACTUAL BORINGS MAY EXIST AWAY FROM THESE BORINGS.
2. SURVEY DATA NOT AVAILABLE; BORING STATIONS ARE APPROXIMATE, AND BORING ELEVATIONS ARE ASSUMED TO BE THE SAME.

LEGEND:

- Pavement
- Fill
- High plasticity clay
- Low plasticity clay
- Silty sand
- Poorly graded silty clayey sand
- Clayey sand
- Approx proposed water line invert depth and diameter near each boring indicated
- Depth of water encountered during drilling
- Depth of water 15 min. after initial encounter
- Depth of water in piezometer; first reading
- Depth of water in piezometer; second reading

AVILES ENGINEERING CORPORATION

GENERALIZED SOIL PROFILE
CITY OF HOUSTON S.W.T.P. CONTRACT 74A-1 WATERLINE
WBS NO. S-000900-0109-3
HOUSTON, TEXAS

AEC PROJECT NO.: G137-10	DATE: 12-03-10	SOURCE DRAWING PROVIDED BY: AVILES ENGINEERING CORP.
VERTICAL SCALE: 1" = 5' HORIZONTAL SCALE: 1" = 300'	DRAFTED BY: BpJ	PLATE NO.: PLATE B-2

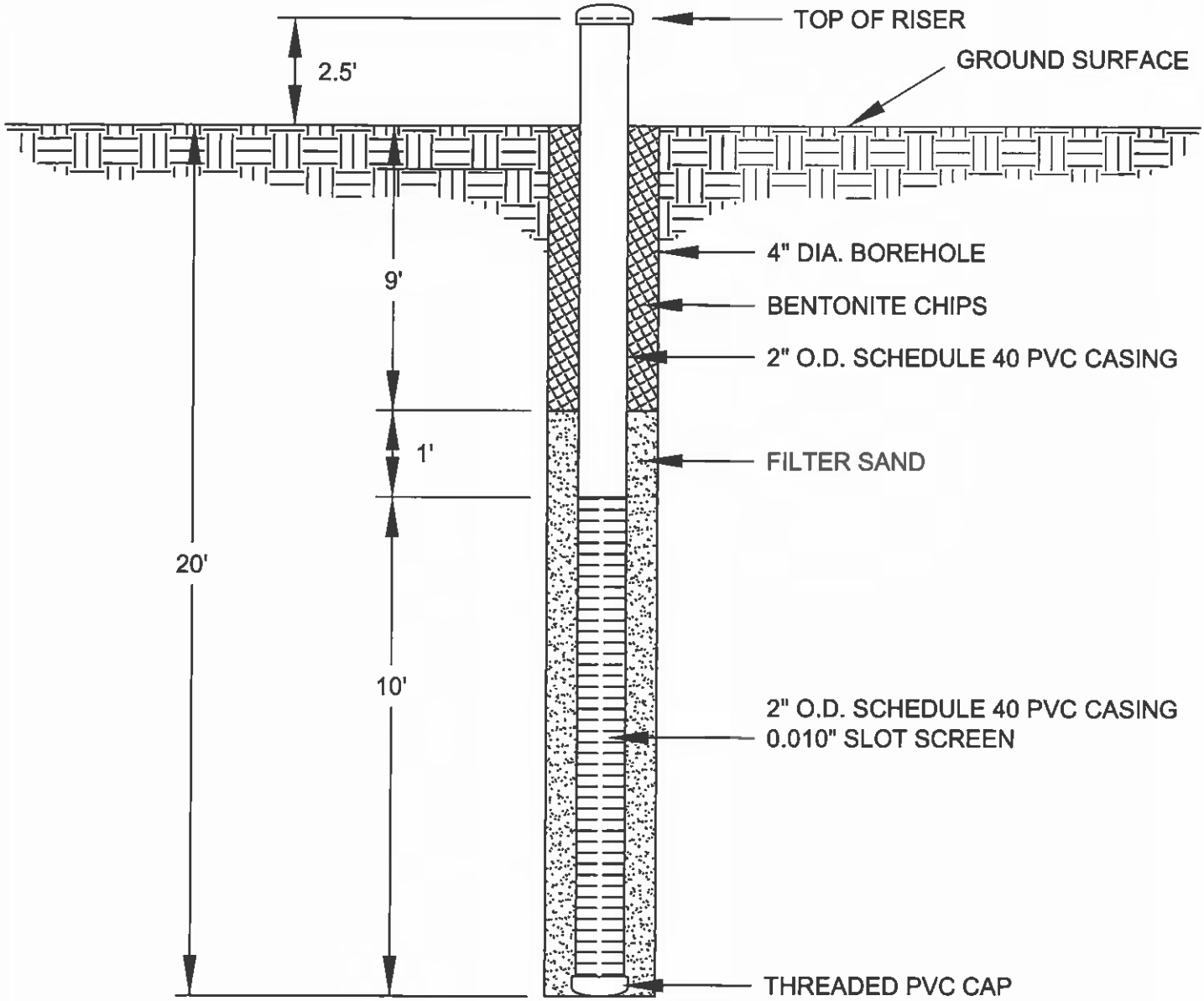

GROUNDWATER DEPTH FROM SURFACE:	DATE MEASURED:
13.8 ft.	7/30/10
16.1 ft.	9/22/10
17.6 ft.	12/1/10

AVILES ENGINEERING CORPORATION

PIEZOMETER INSTALLATION DETAILS
BORING B-2 (PZ-1)
CITY OF HOUSTON S.W.T.P. CONTRACT 74A-1 WATERLINE
WBS NO. S-000900-0109-3
HOUSTON, TEXAS

AEC PROJECT NO :	DATE	SOURCE DWG. BY:
G137-10	12-02-10	AVILES ENGINEERING CORP.
SCALE	DRAWN BY	PLATE NO :
N.T.S.	BpJ	PLATE B-3

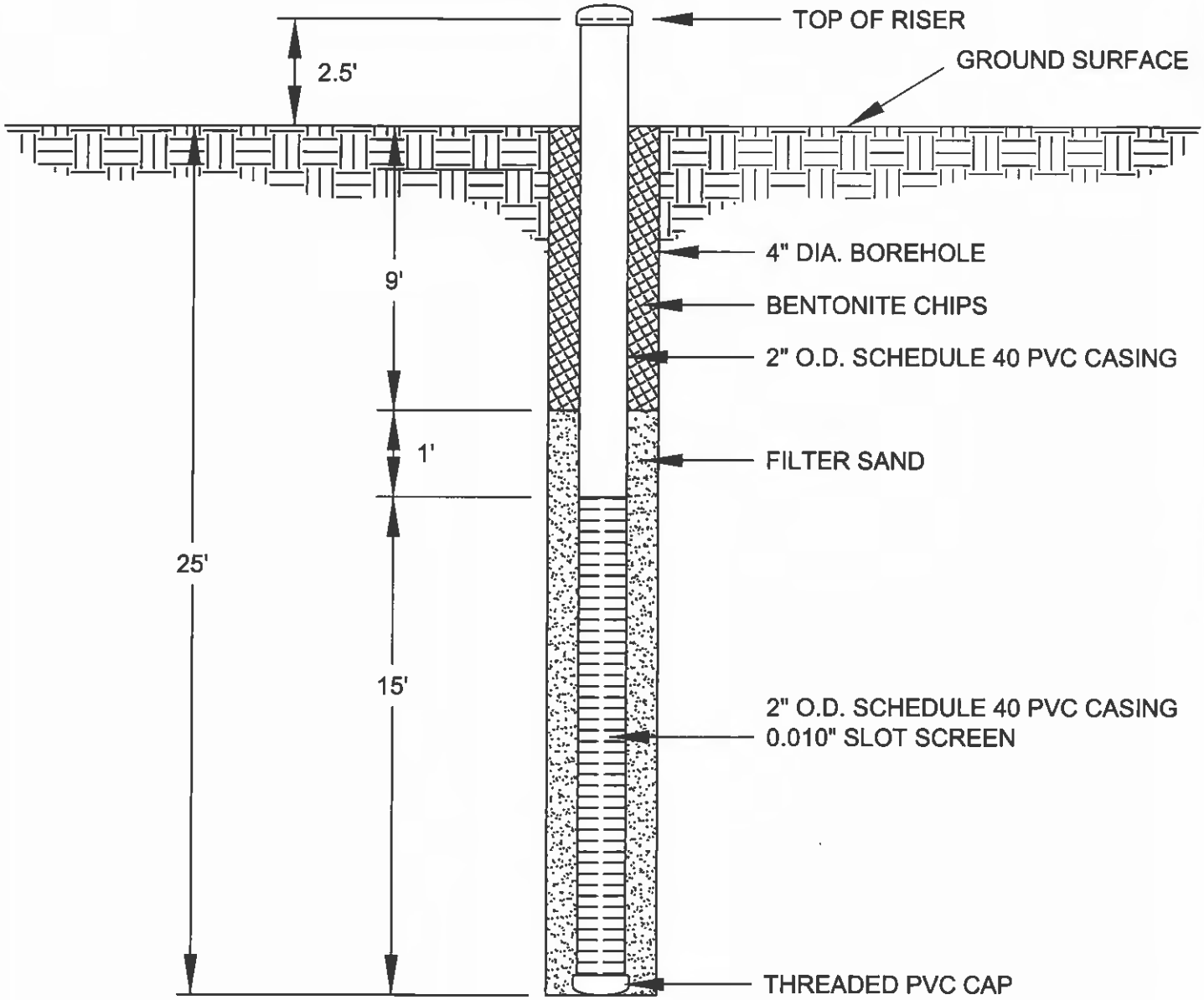

GROUNDWATER DEPTH FROM SURFACE:	DATE MEASURED:
15.0 ft.	8/20/10
13.4 ft.	9/22/10
14.1 ft.	12/1/10

AVILES ENGINEERING CORPORATION

PIEZOMETER INSTALLATION DETAILS
BORING B-6 (PZ-2)
CITY OF HOUSTON S.W.T.P. CONTRACT 74A-1 WATERLINE
WBS NO. S-000900-0109-3
HOUSTON, TEXAS

AEC PROJECT NO	DATE:	SOURCE DWG BY
G137-10	12-02-10	AVILES ENGINEERING CORP.
SCALE: N.T.S.	DRAWN BY: BpJ	PLATE NO.: PLATE B-4

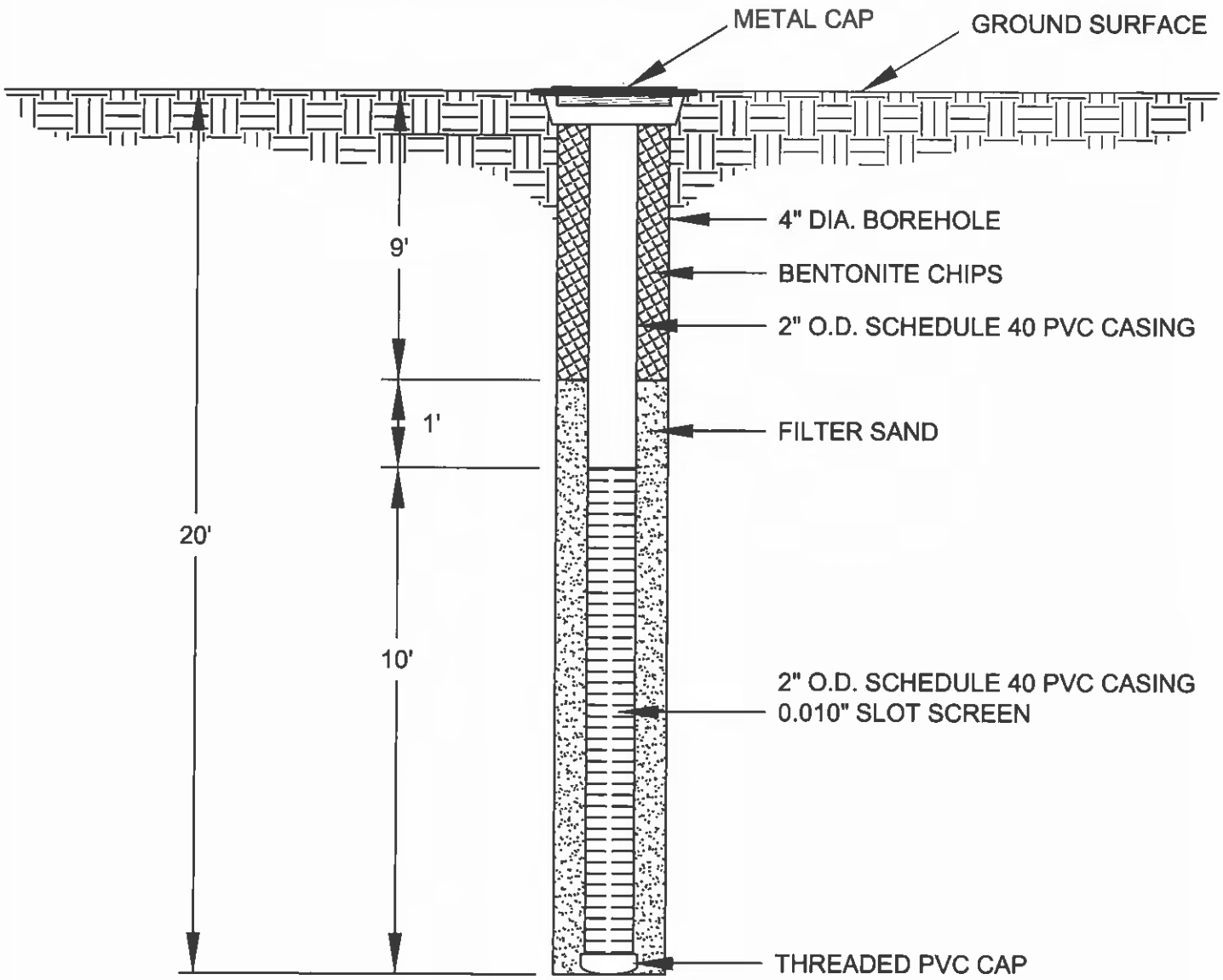

GROUNDWATER DEPTH FROM SURFACE:	DATE MEASURED:
17.3 ft.	6/29/10
6.1 ft.	7/30/10
7.2 ft.	9/22/10
7.3 ft.	12/1/10

AVILES ENGINEERING CORPORATION

PIEZOMETER INSTALLATION DETAILS
BORING B-11 (PZ-3)
CITY OF HOUSTON S.W.T.P. CONTRACT 74A-1 WATERLINE
WBS NO. S-000900-0109-3
HOUSTON, TEXAS

AEC PROJECT NO	DATE	SOURCE DWG BY
G137-10	12-02-10	AVILES ENGINEERING CORP.
SCALE	DRAWN BY	PLATE NO
N.T.S.	BpJ	PLATE B-5

AVILES ENGINEERING CORP.

APPENDIX C

Plates C-1a thru C-1d	Recommended Geotechnical Design Parameters
Plate C-2	Load Coefficients for Pipe Loading
Plate C-3	Live Loads on Pipe Crossing Under Roadway

.

RECOMMENDED GEOTECHNICAL DESIGN PARAMETERS FOR UNDERGROUND UTILITIES
G137-10 COH SWTP Contract 74A-1 Waterline

Location	Depth (ft)	Soil Type	γ (pcf)	γ' (pcf)	E'n (psi)	OSHA Type	Short-Term					Long-Term				
							C (psf)	φ (deg)	K_a	K_0	K_p	C (psf)	φ (deg)	K_a	K_0	K_p
B-1	0-2	Fill: SC	115	53	300	C	0	26	0.39	0.56	2.56	0	26	0.39	0.56	2.56
	2-4	Fill: v.stiff CL	128	66	600	C	1500	0	1.00	1.00	1.00	150	18	0.53	0.69	1.89
	4-12	Stiff to v. stiff CH	119	57	300	B	1000	0	1.00	1.00	1.00	100	16	0.57	0.72	1.76
	12-17	Very stiff CH	119	57	600	C*	1500	0	1.00	1.00	1.00	150	16	0.57	0.72	1.76
	17-23	V.stiff to hard CL	132	70	600	C* (17-20)	2000	0	1.00	1.00	1.00	200	18	0.53	0.69	1.89
	23-30	M.dense to dense SM	120	58	1000	n/a	0	30	0.33	0.50	3.00	0	30	0.33	0.50	3.00
B-2	0-4	Fill: stiff to v.stiff CL/CH	126	64	600	C	1200	0	1.00	1.00	1.00	100	16	0.57	0.72	1.76
	4-12	Stiff to hard CH	130	68	600	B	1800	0	1.00	1.00	1.00	175	16	0.57	0.72	1.76
	12-16	V.stiff CL	127	65	600	C*	2000	0	1.00	1.00	1.00	200	18	0.53	0.69	1.89
	16-22	Firm CL	120	58	300	C* (16-20)	600	0	1.00	1.00	1.00	50	18	0.53	0.69	1.89
	22-25	M.dense SM	120	58	1000	n/a	0	30	0.33	0.50	3.00	0	30	0.33	0.50	3.00
B-3	0-8	Fill: hard CL/CH	130	68	600	C	1500	0	1.00	1.00	1.00	150	16	0.57	0.72	1.76
	8-16	Stiff to hard CH	131	69	600	C*	1800	0	1.00	1.00	1.00	175	16	0.57	0.72	1.76
	16-25	V.stiff to hard CL	127	65	1000	C* (16-20)	2200	0	1.00	1.00	1.00	200	18	0.53	0.69	1.89

(Continued on Next Page)

RECOMMENDED GEOTECHNICAL DESIGN PARAMETERS FOR UNDERGROUND UTILITIES
G137-10 COH SWTP Contract 74A-1 Waterline

Location	Depth (ft)	Soil Type	γ (pcf)	γ' (pcf)	E'n (psi)	OSHA Type	Short-Term					Long-Term				
							C (psf)	φ (deg)	K_a	K_0	K_p	C (psf)	φ (deg)	K_a	K_0	K_p
B-4	0-4	Fill: v.stiff to hard CL/CH	126	64	600	C	1500	0	1.00	1.00	1.00	150	16	0.57	0.72	1.76
	4-12	Fill: v.stiff to hard CH	131	69	1000	C	2000	0	1.00	1.00	1.00	200	16	0.57	0.72	1.76
	12-27	V.stiff to hard CL/CH	131	69	1000	C* (12-20)	2000	0	1.00	1.00	1.00	200	16	0.57	0.72	1.76
	27-30	Stiff to v.stiff CL	131	69	300	n/a	1000	0	1.00	1.00	1.00	100	18	0.53	0.69	1.89
B-5	0-4	Fill: v.stiff CL/CH	121	59	1000	C	2000	0	1.00	1.00	1.00	200	16	0.57	0.72	1.76
	4-12	Stiff to v.stiff CL/CH	123	61	600	B	1900	0	1.00	1.00	1.00	175	16	0.57	0.72	1.76
	12-18	V.stiff CL	125	63	1000	C*	2200	0	1.00	1.00	1.00	200	18	0.53	0.69	1.89
	18-27	V.stiff to hard CL	130	68	1000	C* (18-20)	2500	0	1.00	1.00	1.00	250	18	0.53	0.69	1.89
	27-30	V.dense SM	125	63	1000	n/a	0	34	0.28	0.44	3.53	0	34	0.28	0.44	3.53
B-6	0-4	Fill: hard CH	120	58	1000	C	2000	0	1.00	1.00	1.00	200	16	0.57	0.72	1.76
	4-12	SC	125	63	600	C	1400	0	1.00	1.00	1.00	75	21	0.47	0.64	2.12
	12-21	V.stiff CL	127	65	1000	C* (12-20)	2200	0	1.00	1.00	1.00	200	18	0.53	0.69	1.89
	21-26	SC	125	63	600	n/a	0	28	0.36	0.53	2.77	0	28	0.36	0.53	2.77
	26-35	V.stiff to hard CL	131	69	1000	n/a	2100	0	1.00	1.00	1.00	200	18	0.53	0.69	1.89

(Continued on Next Page)

RECOMMENDED GEOTECHNICAL DESIGN PARAMETERS FOR UNDERGROUND UTILITIES
G137-10 COH SWTP Contract 74A-1 Waterline

Location	Depth (ft)	Soil Type	γ (pcf)	γ' (pcf)	E'n (psi)	OSHA Type	Short-Term					Long-Term				
							C (psf)	φ (deg)	K_a	K_0	K_p	C (psf)	φ (deg)	K_a	K_0	K_p
B-7	0-4	Fill: v.stiff CH	126	64	1000	C	2000	0	1.00	1.00	1.00	200	16	0.57	0.72	1.76
	4-8	V.stiff to hard CL	120	58	1000	B	2000	0	1.00	1.00	1.00	200	18	0.53	0.69	1.89
	8-15	Stiff to v.stiff CL	125	63	600	B	1400	0	1.00	1.00	1.00	125	18	0.53	0.69	1.89
	15-25	Firm to stiff CL	125	63	300	C* (15-20)	900	0	1.00	1.00	1.00	75	18	0.53	0.69	1.89
B-8	0-4	V.stiff CL	130	68	1000	B	2400	0	1.00	1.00	1.00	225	18	0.53	0.69	1.89
	4-8	Stiff to v.stiff CL	131	69	600	B	1400	0	1.00	1.00	1.00	125	18	0.53	0.69	1.89
	8-18	Loose SC	115	53	200	C	0	26	0.39	0.56	2.56	0	26	0.39	0.56	2.56
	18-25	V.stiff CL/CH	131	69	1000	B (18-20)	2500	0	1.00	1.00	1.00	250	16	0.57	0.72	1.76
B-9	0-2	Fill: stabilized CL	120	58	600	C	1000	0	1.00	1.00	1.00	100	18	0.53	0.69	1.89
	2-8	V.stiff CL	127	65	1000	B	2400	0	1.00	1.00	1.00	225	18	0.53	0.69	1.89
	8-17	Stiff to v.stiff CH	122	60	600	B	1400	0	1.00	1.00	1.00	125	16	0.57	0.72	1.76
	17-30	V.stiff CL	128	66	1000	B (17-20)	2000	0	1.00	1.00	1.00	200	18	0.53	0.69	1.89

(Continued on Next Page)

RECOMMENDED GEOTECHNICAL DESIGN PARAMETERS FOR UNDERGROUND UTILITIES
G137-10 COH SWTP Contract 74A-1 Waterline

Location	Depth (ft)	Soil Type	γ (pcf)	γ' (pcf)	E'n (psi)	OSHA Type	Short-Term					Long-Term				
							C (psf)	φ (deg)	K_a	K_0	K_p	C (psf)	φ (deg)	K_a	K_0	K_p
B-10	0-2	Fill: stiff CH	120	58	300	C	1000	0	1.00	1.00	1.00	100	16	0.57	0.72	1.76
	2-8	Stiff to v.stiff CL	126	64	600	B	1800	0	1.00	1.00	1.00	175	18	0.53	0.69	1.89
	8-16	Stiff to v.stiff CH	120	58	600	B	1200	0	1.00	1.00	1.00	100	16	0.57	0.72	1.76
	16-25	Stiff to v.stiff CL	123	61	600	B (16-20)	1800	0	1.00	1.00	1.00	175	18	0.53	0.69	1.89
B-11	0-2	Fill: stiff to v.stiff CH	120	58	300	C	1000	0	1.00	1.00	1.00	100	16	0.57	0.72	1.76
	2-8	Stiff to v.stiff CH	119	57	600	B	1500	0	1.00	1.00	1.00	150	16	0.57	0.72	1.76
	8-12	Stiff to v.stiff CH	127	65	1000	B	2000	0	1.00	1.00	1.00	200	16	0.57	0.72	1.76
	12-17	Stiff to v.stiff CH	126	64	600	B	1200	0	1.00	1.00	1.00	100	16	0.57	0.72	1.76
	17-25	V.stiff to hard CL	127	65	1000	B (17-20)	2500	0	1.00	1.00	1.00	250	18	0.53	0.69	1.89
B-12	0-6	Stiff to v.stiff CL/CH	131	69	600	B	1600	0	1.00	1.00	1.00	150	18	0.53	0.69	1.89
	6-22	SC/SC-SM/CL	124	62	300	C (8-20)	0	28	0.36	0.53	2.77	0	28	0.36	0.53	2.77
	22-25	V.stiff CL	120	58	1000	n/a	2000	0	1.00	1.00	1.00	200	18	0.53	0.69	1.89

Notes: (1) γ = Unit weight for soil above water level, γ' = Buoyant unit weight for soil below water level.
(2) C = Soil ultimate cohesion, φ = Soil friction angle.
(3) K_a = Coefficient of active earth pressure, K_0 = Coefficient of at-rest earth pressure, K_p = Coefficient of passive earth pressure, for level backfill.
(4) CL = Lean Clay, CH = Fat Clay, SC = Clayey Sand; SM = Silty Sand; SC-SM = Silty Clayey Sand.
(5) OSHA Soil Types for soils less than 20 feet below grade:
A: cohesive soils with qu = 1.5 tsf or greater (qu = Unconfined Compressive Strength of the Soil)
B: cohesive soils with qu = 0.5 tsf or greater
C: cohesive soils with qu = less than 0.5 tsf, fill materials, or granular soil
C*: submerged cohesive soils can be classified as OSHA Type B if dewatered first.

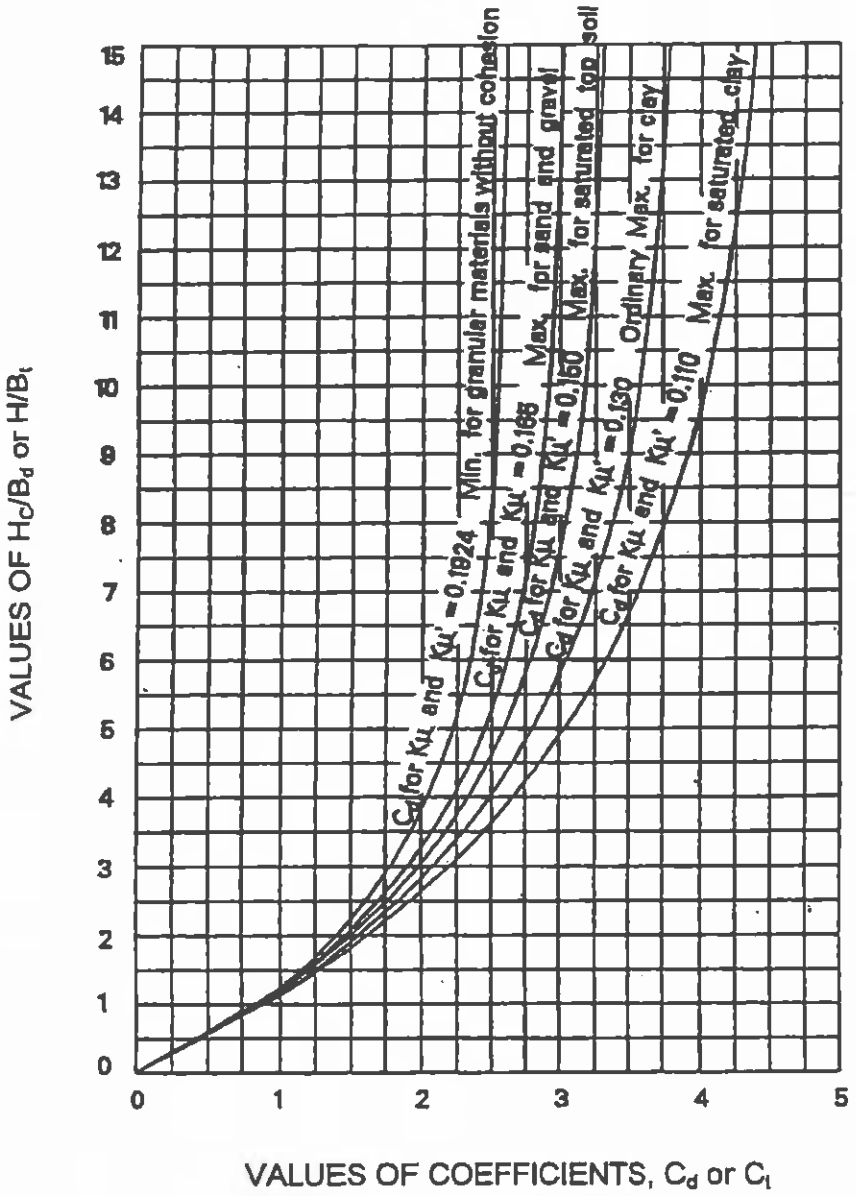

Reference: US Army Corps of Engineers Engineering Manual, EM 1110-2-2909, Oct. 31, 1997, Figure 2-5.

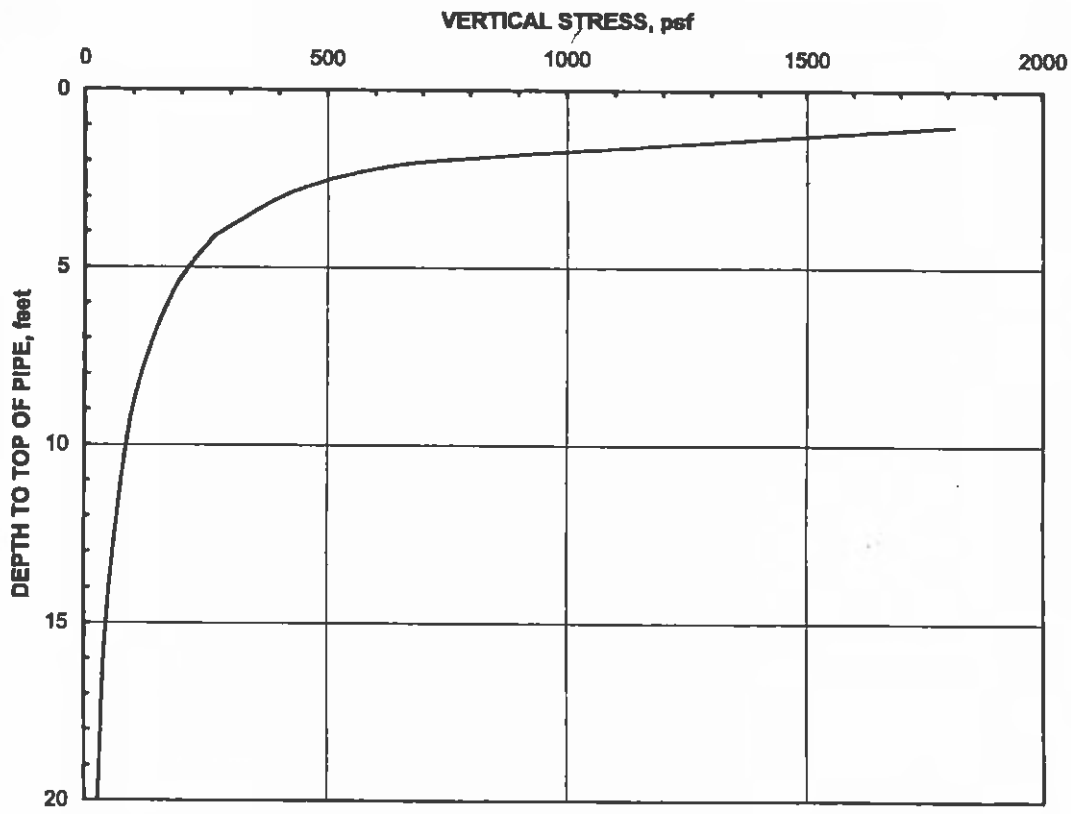

LIVE LOADS ON PIPE CROSSING UNDER ROADWAY

Note: 1. The vertical stress was estimated using AASHTO HS20 truck axle loadings on paved surfaces (Reference: ASCE 15-98, "Standard Practice for Direct Design of Buried Precast Concrete Pipe Using Standandard Installations").
2. Single truck passing.

AVILES ENGINEERING CORP.

APPENDIX D

AYLES ENGINEERING CORP.

Critical Heights of Cut Slopes in Nonfissured Clays

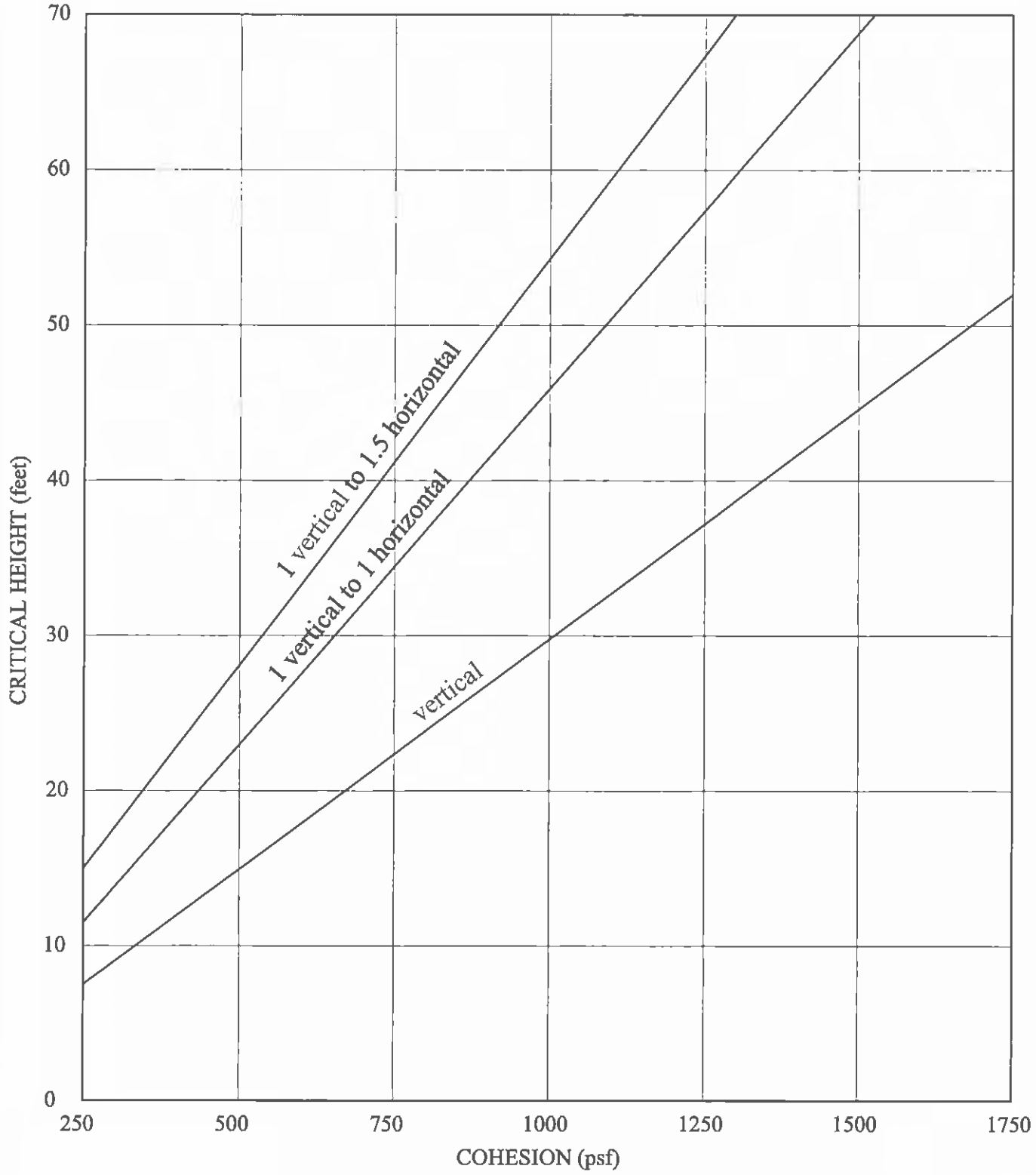

Note: The charts are calculated based on NAVFAC DM7.1, Page 7.1-319, assuming the critical circles are toe circles, and wet unit weight of soils = 125pcf.

AYLES ENGINEERING CORP.

MAXIMUM ALLOWABLE SLOPES

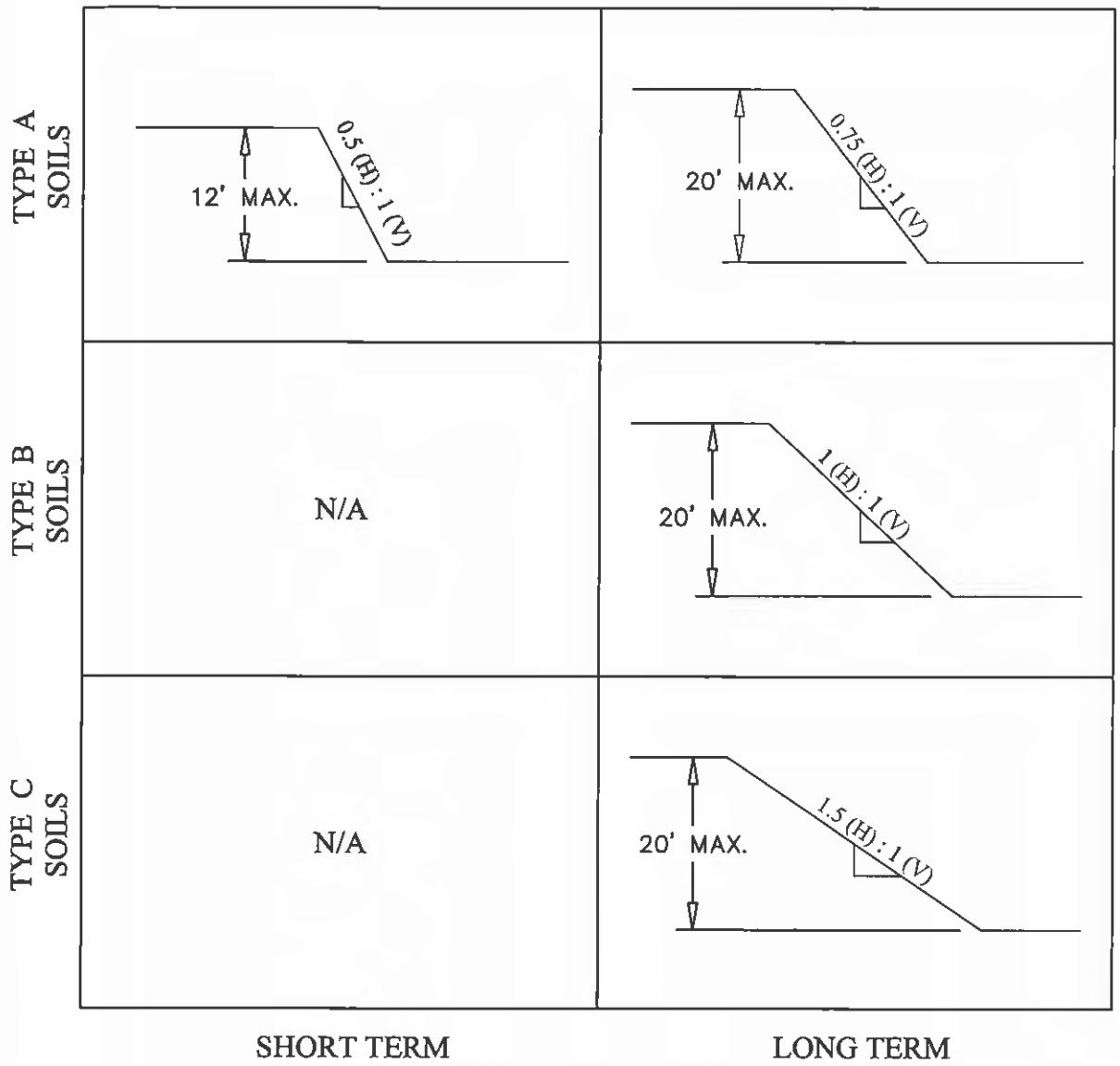

NOTES:

(1) For Type A soils, a short term maximum allowable slope of 0.5 (H) : 1 (V) is allowed in excavations that are 12 feet or less in depth; short term (24 hours or less) maximum allowable slopes for excavations greater than 12 feet in depth shall be 0.75 (H) : 1 (V).

(2) Maximum depth for above slopes is 20 feet. For slopes deeper than 20 feet, trench protection should be designed by the Contractor's professional engineer.

Reference: OSHA, Safety and Health Regulations for Construction, 1926 Subpart P.

AYLES ENGINEERING CORP.

A COMBINATION OF BRACING AND OPEN CUTS

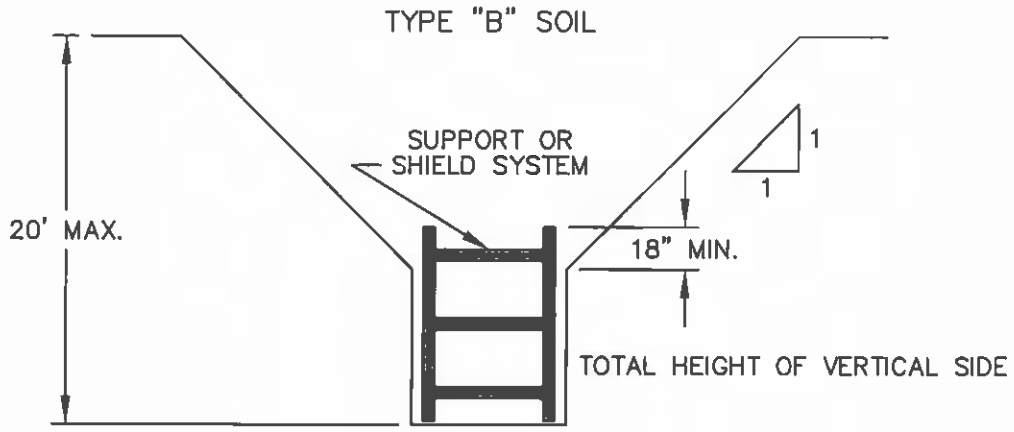

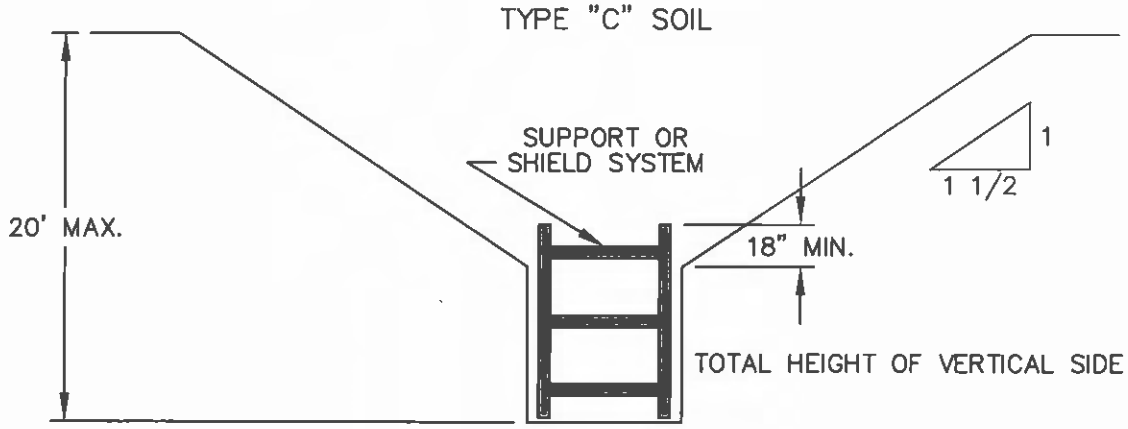

Reference: OSHA, Safety and Health Regulations for Construction, 1926 Subpart P.

AYLES ENGINEERING CORP.

LATERAL PRESSURE DIAGRAMS
FOR OPEN CUTS IN COHESIVE SOIL - LONG TERM CONDITIONS

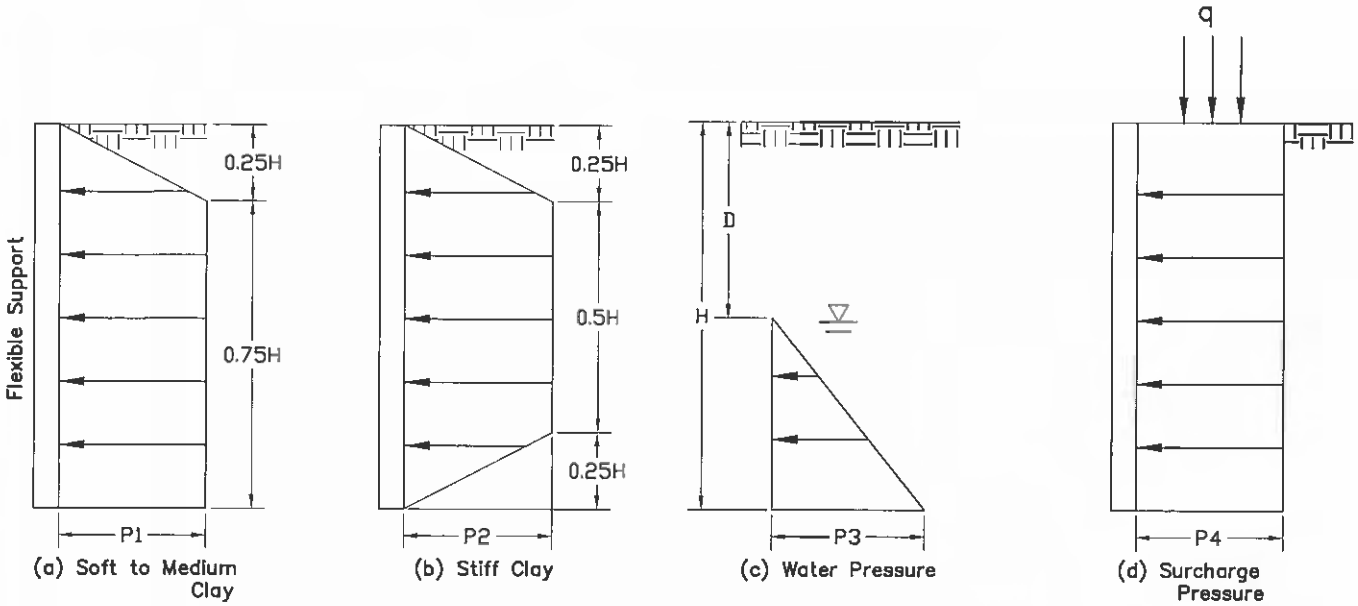

Empirical Pressure Distributions

Where:
H = Total excavation depth, feet
D = Depth to water table, feet
P1 = Lateral earth pressure = γH-4C, psf
P2 = Lateral earth pressure = 0.4γH, psf
P3 = Water pressure = γ_w (H-D), psf
P4 = Lateral earth pressure caused by surcharge = qK_a, psf
γ = Effective unit weight of soil, pcf
γ_w = Unit weight of water, pcf
C = Drained shear strength or cohesion, psf
K_a = Coefficient of active earth pressure

Notes:
1. All pressures are additive.
2. No safety factors are included.
3. For use only during long term construction.
4. If $\gamma H/C < 4$, use section (b),
   If $4 < \gamma H/C < 6$, use larger of section (a) or (b),
   If $\gamma H/C > 6$, use section (a).

Reference: Peck, R.B. (1969), "Deep Excavation and Tunneling in soft Ground", 7th ICSMFE, State of art volume, pp. 225-290.

AYLES ENGINEERING CORP.

LATERAL PRESSURE DIAGRAMS
FOR OPEN CUTS IN COHESIVE SOIL - SHORT TERM CONDITIONS

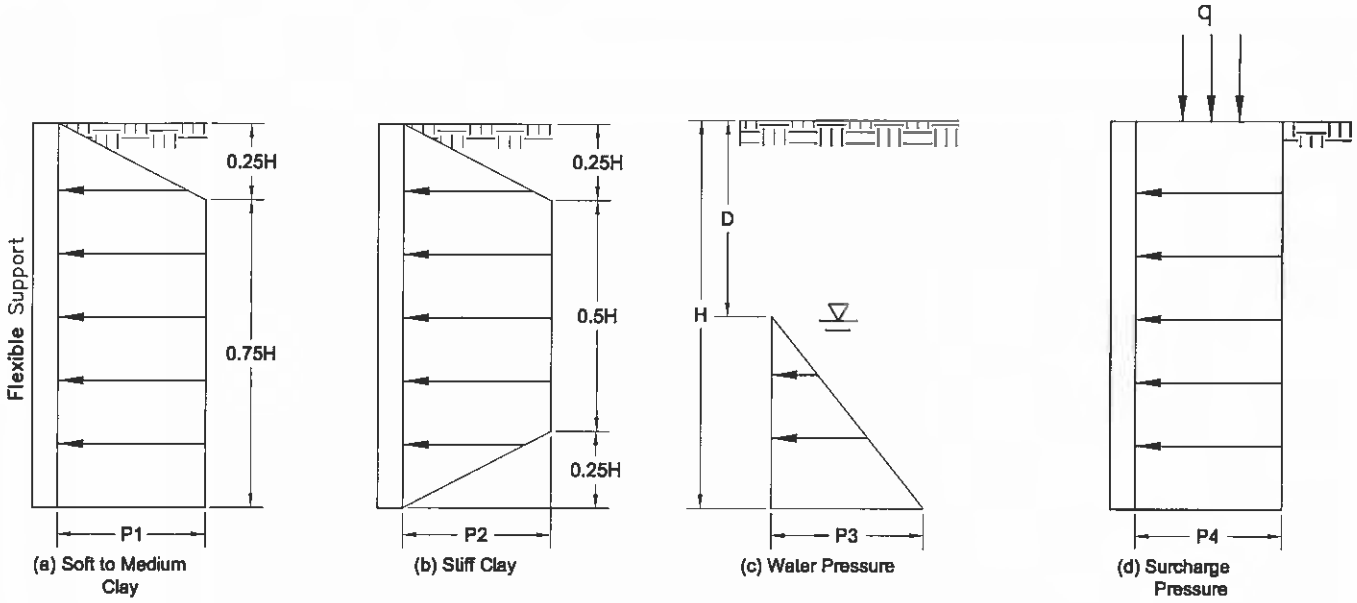

Empirical Pressure Distributions

Where:
H = Total excavation depth, feet
D = Depth to water table, feet
P1 = Lateral earth pressure = $\gamma H - 4S_u$, psf
P2 = Lateral earth pressure = $0.2\gamma H$, psf
P3 = Water pressure = $\gamma_w (H-D)$, psf
P4 = Lateral earth pressure caused by surcharge = qK_a, psf
γ = Effective unit weight of soil, pcf
γ_w = Unit weight of water, pcf
S_u = Undrained shear strength = $q_u/2$, psf
q_u = Unconfined compressive strength, psf
K_a = Coefficient of active earth pressure

Notes:
1. All pressures are additive.
2. No safety factors are included.
3. For use only during short term construction.
4. If $\gamma H/S_u < 4$, use section (b),
   If $4 < \gamma H/S_u < 6$, use larger of section (a) or (b),
   If $\gamma H/S_u > 6$, use section (a).

Reference: Peck, R.B. (1969), "Deep Excavation and Tunneling in soft Ground", 7th ICSMFE, State of art volume, pp. 225-290.

AYLES ENGINEERING CORP.

LATERAL PRESSURE DIAGRAMS
FOR OPEN CUTS IN SAND

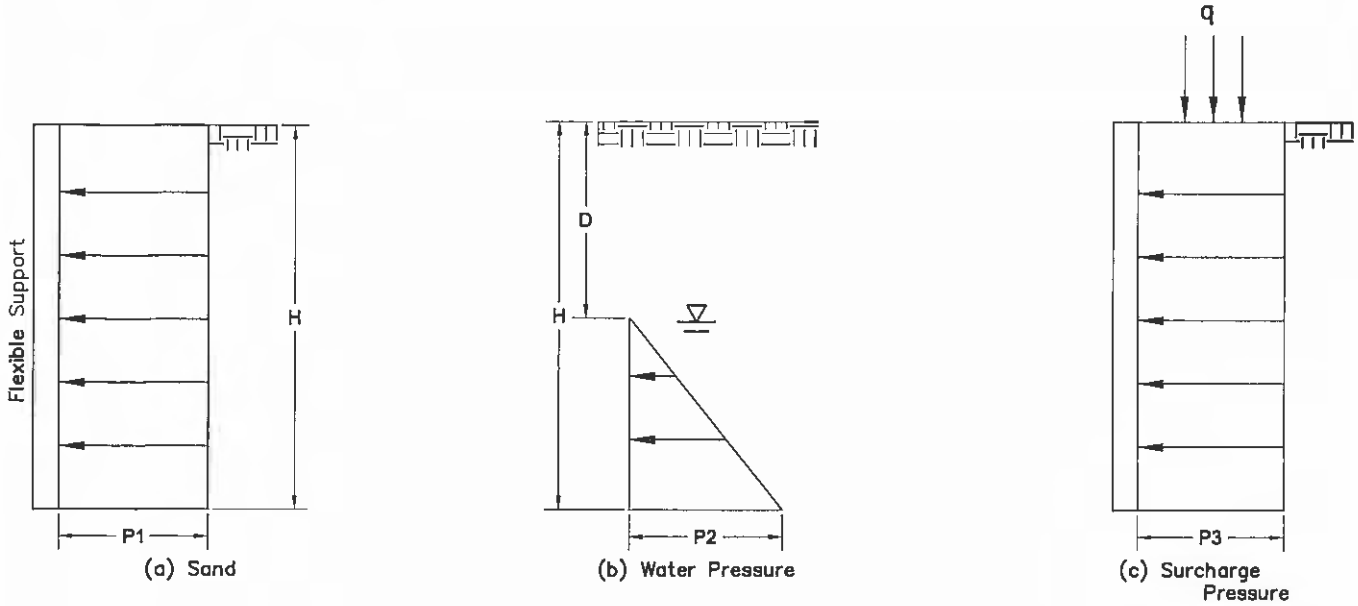

Empirical Pressure Distributions

Where:
H = Total excavation depth, feet
D = Depth to water table, feet
P1 = Lateral earth pressure = $0.65^{*}\gamma HK_a$, psf
P2 = Water pressure = γ_w (H-D), psf
P3 = Lateral earth pressure caused by surcharge = qK_a, psf
γ = Effective unit weight of soil, pcf
γ_w = Unit weight of water, pcf
K_a = Coefficient of active earth pressure = $(1-\sin\varphi)/(1+\sin\varphi)$
φ = Drained friction angle

Notes:
1. All pressures are additive.
2. No safety factors are included.

Reference: Peck, R.B. (1969), "Deep Excavation and Tunneling in soft Ground", 7th ICSMFE, State of art volume, pp. 225-290.

BOTTOM STABILITY FOR BRACED EXCAVATION IN CLAY

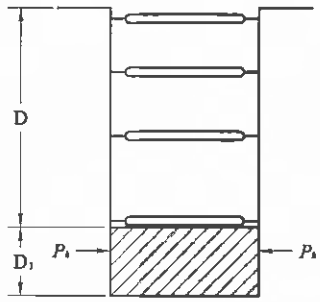

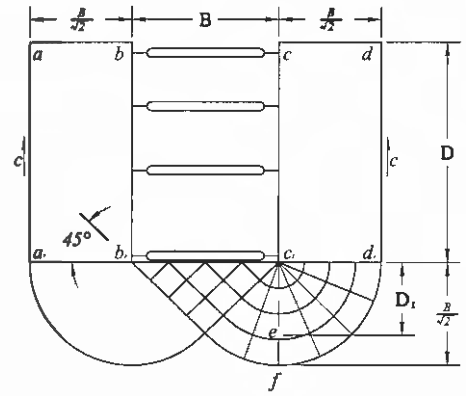

Factor of Safety against bottom of heave,

$$F.S = \frac{NcC}{(\gamma D+q)}$$

where, Nc = Coefficient depending on the dimension of the excavation (see Figure at the bottom)
C = Undrained shear strength of soil in zone immediately around the bottom of the excavation,
γ = Unit weight of soil,
D = Depth of excavation,
q = Surface surcharge.

If F.S < 1.5, sheeting should be extended further down to achieve stability

$$\textit{Depth of Buried Length, } (D_1) = \frac{1.5(\gamma D+q)-NcC}{(C/B)-0.5\gamma} \; ; D_1 \geq 5\,ft.$$

Pressure on buried length, P_b:

For $D_1 < 0.47B$; $P_b = 1.5\, D_1(\gamma D - 1.4\, CD/B - 3.14C)$

For $D_1 > 0.47B$; $P_b = 0.7\, (\gamma DB - 1.4\, CD - 3.14CB)$

where; B = width of excavation

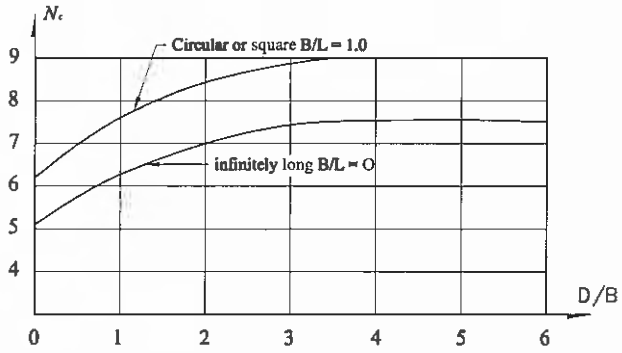

N_c rectangular = $(0.84 + 0.16B/L)N_c$ square

Reference: Bjerrum, L. and Eide, O., Stability of Strutted Excavations in Clay, Geotechnique, 6, 32-47 (1956).

AYLES ENGINEERING CORP.

BUOYANT UPLIFT RESISTANCE FOR BURIED STRUCTURES

(a) WALL / SOIL FRICTION PLUS STRUCTURAL WEIGHT

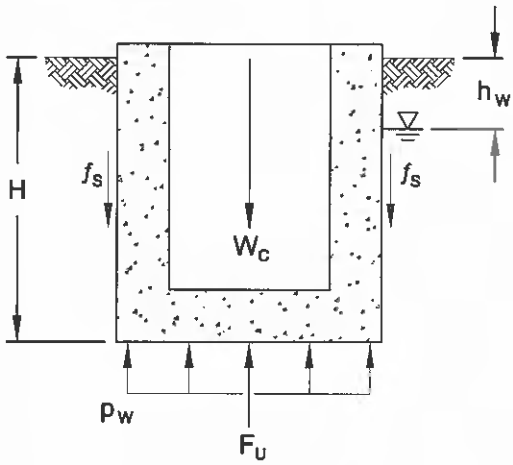

SOIL LAYER 1

SOIL LAYER 2

SOIL LAYER " j "

(b) SOIL WEIGHT ABOVE BASE EXTENSION

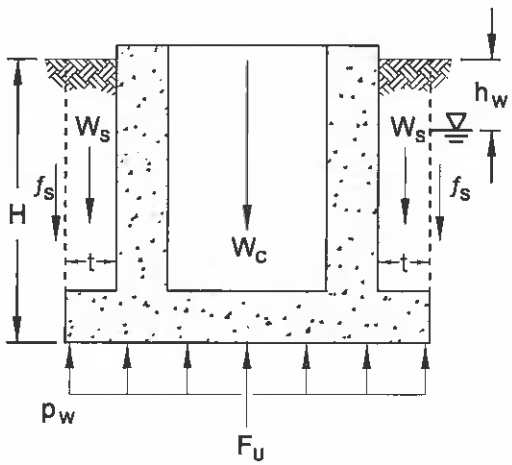

cohesive soils: $f_{s_j} = \alpha\ c_j \leq 3{,}000$ psf

cohesionless soils: $f_{s_j} = 0.75\ K_s\ \sigma_{v_j} \tan\delta_j$

$$Q_s = P_s \sum f_{s_j} h_j$$

$$\frac{W_c}{S_{f_a}} + \frac{Q_s}{S_{f_b}} \geq F_U$$

cohesive soils: $f_{s_j} = c_j \leq 3{,}000$ psf

cohesionless soils: $f_{s_j} = 0.75\ K_s\ \sigma_{v_j} \tan\Phi_j$

$$Q_s = P_s \sum f_{s_j} h_j$$

$$\frac{W_c}{S_{f_a}} + \frac{Q_s}{S_{f_b}} + \frac{W_s}{S_{f_c}} \geq F_U$$

Where:

A_B = area of base, sq. ft.
H = buried height of structure, ft.
h_w = depth to water table, ft.
p_w = $\gamma_w (H - h_w)$, unit hydrostatic uplift, psf.
γ_w = 62.4 pcf, unit weight of water
F_U = $p_w A_B$, hydrostatic uplift force, lbs.
f_{s_j} = unit frictional resistance of soil layer " j ", psf.
c_j = undrained cohesion of soil layer " j ", psf.
α = 0.55, cohesion factor between soil and structure wall
σ_{v_j} = effective overburden pressure at midpoint of soil layer " j ", psf.
δ_j = 0.75 Φ_j, friction angle between soil layer " j " and concrete wall, degrees
Φ_j = internal angle of friction of soil layer " j ", degrees
K_s = 0.4, coefficient of lateral pressure
h_j = thickness of soil layer " j ", ft.
j = 1, 2, ...
P_s = perimeter of structure base, ft.
Q_s = ultimate skin friction, lbs.
W_c = weight of structure, lbs.
W_s = weight of backfill above base extension, lbs.
S_{f_a} = 1.1, factor of safety for dead weight of structure
S_{f_b} = 3.0, factor of safety for soil / structure friction
S_{f_c} = 1.5, factor of safety for soil weight above base extension
t = width of base extension, ft.

NOTE: neglect f_s in upper 5 feet for expansive clay with a plasticity index > 20.

Reference:

1) *American Concrete Pipe Association, (1996), Manhole Floatation*
2) *O'Neill, M.W., and Reese, L.C., (1999), "Drilled Shafts: Construction Procedures and Design Methods", FHWA-IF-99-025*

THRUST FORCE CALCULATION

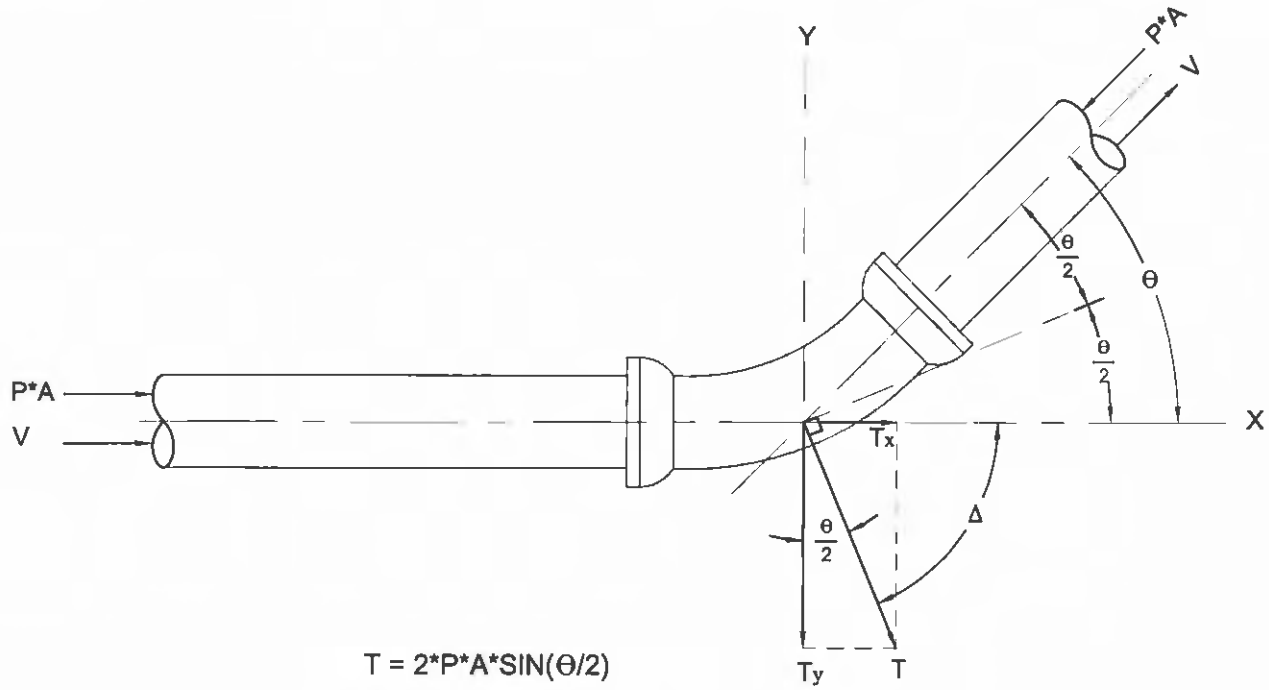

$T = 2*P*A*SIN(\Theta/2)$

$T_x = P*A*(1-COS\Theta)$

$T_y = P*A*SIN\Theta$

$\Delta = (90-\Theta/2)$

Where:

T = resultant thrust force

T_x= thrust force component along the X axis

T_y= thrust force component along the Y axis

P = maximum sustained pressure

A = cross-sectional area of pipe = $(\pi/4)*(D)^2$

D = inside diameter conduit

Θ = angle of bend

Δ = angle between X axis and T

V = fluid velocity

Reference: American Water Works Association, Manual MA, "Concrete Pressure Pipe".

THRUST FORCE EXAMPLE CALCULATION

Trust Force Example Calculation

$T = 2*P*A*SIN(\Theta/2)$

$T_x = P*A*SIN(1-COS\Theta)$

$T_y = P*A*SIN\ \Theta$

Where:

T = resultant thrust force

T_x = thrust force component along the X axis

T_y = thrust force component along the Y axis

P = maximum sustained pressure

A = cross-section area of pipe = $(\pi/4)*(D)^2$

D = inside diameter of conduit

U = angle of bend

Given: D = 24", P = 200 psi, $\Theta = 60°$

Find: T, T_x and T_y

$A = (\pi/4)*(24)^2 = 452.39\ in^2$

$T = 2*200*452.39*SIN(60/2) = 90{,}478$ lb

$T_x = 200*452.39*(1-COS60) = 45{,}239$ lb

$T_y = 200*452.39*SIN60 = 78{,}356$ lb

AYLES ENGINEERING CORP.

Relation between the Width of the Surface Depression (i/a) and the Depth of the Cavity (z/a) for Tunnels

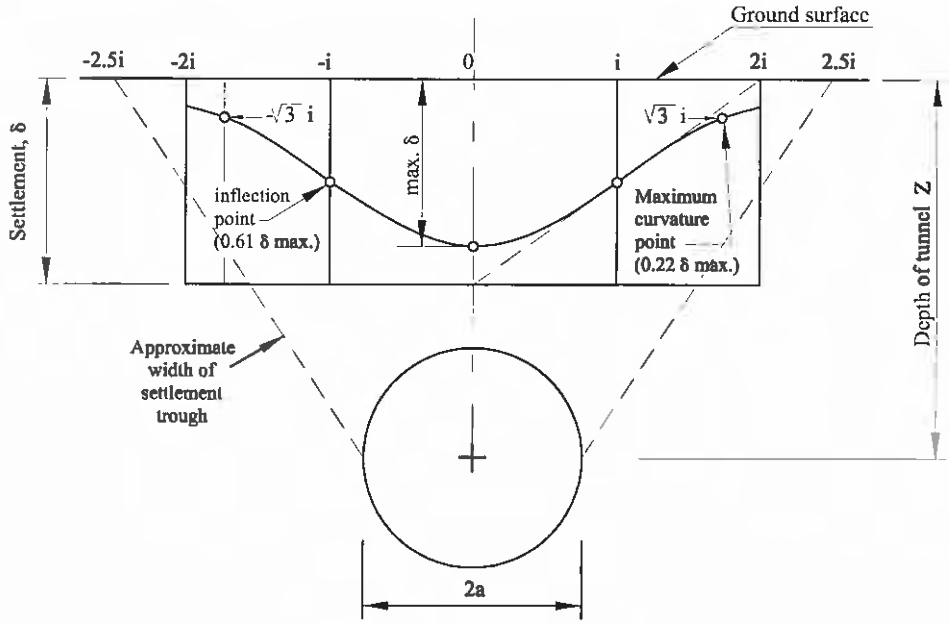

Volume of depression = 2.5i δ max.

(a)

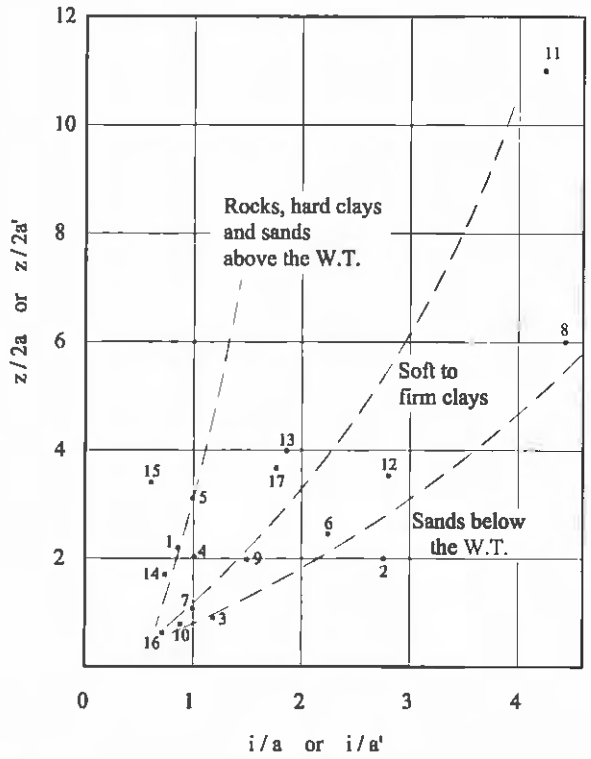

(b)

Reference: Peck, R. B. (1969) "Deep Excavations and Tunneling in Soft Ground," Proceedings, Seventh International Conference on Soil Mechanics and Foundation Engineering, Mexico City, State of the Art Volume, pp. 225-290.

AVILES ENGINEERING CORP.

Tunnel Behavior: Sands and Gravels
(Terzaghi, 1977)

Designation	Degree of Compactness	Tunnel Behavior	
		Above Water Table	Below Water Table
Very Fine Clean Sand	Loose, N ≤ 10	Cohesive Running	Flowing
	Dense, N > 30	Fast Raveling	Flowing
Fine Sand with Clay Binder	Loose, N ≤ 10	Rapid Raveling	Flowing
	Dense, N > 30	Firm or Slowly Raveling	Slowly Raveling
Sand or Sandy Gravel with Clay Binder	Loose, N < 10	Rapid Raveling	Rapidly Raveling or Flowing
	Dense, N > 30	Firm	Firm/slow Raveling
Sandy Gravel and Medium to Coarse Sand		Running Ground. Uniform (C_u< 3) and loose (N < 10) materials with round grains run much more freely than well graded (C_u > 6) and dense (N > 30) ones with angular grains.	Flowing Conditions combined with extremely heavy discharge of water.

TBM FAMILY OF MACHINES
(From Kessler & Moore,)

Machine Type	Typical Machine Diameters	Ground Condition TBM is Best Suited For
Pipe Jacking Machines	Up to approx. 10 – 13 ft (3 - 4m)	Any ground
Small Bore Unit (SBU)	Up to 6.6 ft (2m)	Any ground
Shielded TBMs	6.6 – 46 ft (2 to 14m) plus	Soft ground above the water table
Mix Face TBMs	6.6 – 46 ft (2 to 14m) plus	Mixed ground above the water table
Slurry TBMs	6.6 – 46 ft (2 to 14m) plus	Coarse-grained soft ground below the water table
EPB TBMs	6.6 – 46 ft (2 to 14m) plus	Fine-grained soft ground below the water table
Hard Rock TBMs	6.6 – 46 ft (2 to 14m) plus	Hard rock
Reamer TBMs	Various	Hard rock
Multi-head TBMs	Various	Various

Reference: Dots Oyenuga (2004), "FHWA Road Tunnel Design Guidelines", Pages 8 and 10, published by U.S. Department of Transportation Federal Highway Administration, Report No. FHWA-IF-05-023, Washington DC.

AVILES ENGINEERING CORP.

Methods of Controlling Groundwater
(after Karol, 1990)

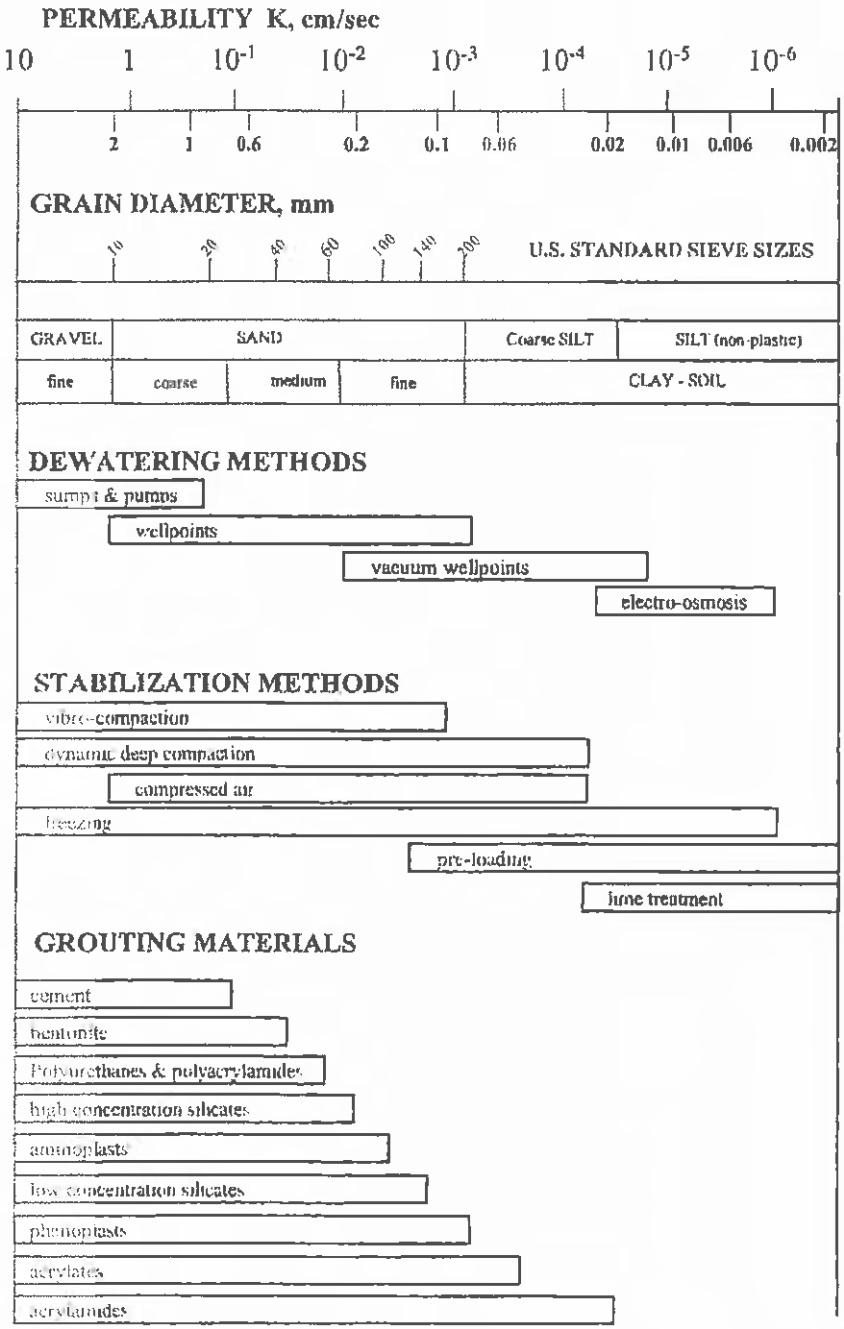

Note: 1 cm/sec = 0.4 in/sec; 1 mm = 0.04 in.

Reference: Dots Oyenuga (2004), "FHWA Road Tunnel Design Guidelines", Page 9, published by U.S. Department of Transportation Federal Highway Administration, Report No. FHWA-IF-05-023, Washington DC.