CERTIFICATE OF APPROPRIATENESS
APPLICATION FORM

PLANNING & DEVELOPMENT DEPARTMENT

PROPERTY

Address 506 Main ST. HOUSTON TX 77002

Historic District / Landmark HCAD #

Subdivision Lot Block

DESIGNATION TYPE

- ☐ Landmark
- ☐ Protected Landmark
- ☐ Archaeological Site
- ☐ Contributing
- ☐ Noncontributing
- ☐ Vacant

PROPOSED ACTION

- ☑ Alteration or Addition
- ☐ Restoration
- ☐ New Construction
- ☐ Relocation
- ☐ Demolition
- ☐ Excavation

DOCUMENTS

☑ Application checklist for each proposed action and all applicable documentation listed within are attached

OWNER

Name BLINI HOXHA

Company

Mailing Address 2450 LOUISIANA ST.
STE 400-935 HOUSTON TX 77002

Phone 281-460-4961

Email [redacted]

Signature

Date 1/18/16

APPLICANT (if other than owner)

Name

Company

Mailing Address

Phone

Email

Signature

Date

ACKNOWLEDGEMENT OF RESPONSIBILITY

Requirements: A complete application includes all applicable information requested on checklists to provide a complete and accurate description of existing and proposed conditions. Preliminary review meeting or site visit with staff may be necessary to process the application. Owner contact information and signature is required. Late or incomplete applications will not be considered.

Deed Restrictions: You have verified that the work does not violate applicable deed restrictions.

Public Records: If attached materials are protected by copyright law, you grant the City of Houston, its officers, agencies, departments, and employees, non-exclusive rights to reproduce, distribute and publish copyrighted materials before the Houston Archaeological and Historical Commission, the Planning Commission, City Council, and other City of Houston commissions, agencies, and departments, on a City of Houston website, or other public forum for the purposes of application for a Certificate of Appropriateness or building permit, and other educational and not for profit purposes. You hereby represent that you possess the requisite permission or rights being conveyed here to the City.

Compliance: If granted, you agree to comply with all conditions of the COA. Revisions to approved work require staff review and may require a new application and HAHC approval. Failure to comply with the COA may result in project delays, fines or other penalties.

Planner: _____ *Application received:* ___/___/___ *Application complete:* ___/___/___

CERTIFICATE OF APPROPRIATENESS
ALTERATION & ADDITON CHECKLIST

PLANNING & DEVELOPMENT DEPARTMENT

Well in advance of the COA application deadline contact staff to discuss your project and, if necessary, to make an appointment to meet with staff for a project consultation.

Complete all applicable items and submit with the COA application form. Staff can assist you in determining what items are required for your scope of work. An incomplete application may cause delays in processing or may be deferred to the next agenda. Application materials must clearly represent current and proposed conditions. Refer to Houston Code of Ordinances, Ch. 33 VII, Sec. 33-241 for approval criteria for alteration, rehabilitation, restoration and additions.

PROPERTY ADDRESS: 506 Main st. Houston TX 77002

BUILDING TYPE

- ☐ single-family residence
- ☐ multi-family residence
- ☐ commercial building
- ☐ mixed use building
- ☐ institutional building
- ☐ garage
- ☐ carport
- ☐ accessory structure
- ☐ other

ALTERATION TYPE

- ☐ addition
- ☐ foundation
- ☐ wall siding or cladding
- ☐ windows or doors
- ☐ porch or balcony
- ☐ roof
- ☑ awning or canopy
- ☑ commercial sign
- ☐ ramp or lift
- ☐ other

WRITTEN DESCRIPTION

- ☑ property description, current conditions and any prior alterations or additions CANOPY / SIGN
- ☑ proposed work; plans to change any exterior features, and/or addition description CANOPY / SIGN
- ☑ current building material conditions and originality of any materials proposed to be repaired or replaced CANOPY / SIGN
- ☑ proposed new materials description; attach specification sheets if necessary CANOPY / SIGN

PHOTOGRAPHS label photos with description and location

- ☐ elevations of all sides
- ☑ detail photos of exterior elements subject to proposed work
- ☐ historical photos as evidence for restoration work

DRAWINGS scale like drawings the same; include all dimensions and drawing scale; label with cardinal directions

- ☐ current site plan
- ☐ proposed site plan
- ☐ current floor plans Proposed CANOPY
- ☑ proposed floor plans Proposed SIGN
- ☐ current window and door schedule
- ☐ proposed window and door schedule
- ☐ demolition plan
- ☐ current roof plan
- ☐ proposed roof plan
- ☐ current elevations (all sides)
- ☐ proposed elevations (all sides)
- ☐ perspective and/or line of sight

If the Applicant does not own the property, the below Owner Consent Form must be completed by the property Owner and submitted with the Application.

OWNER CONSENT FORM

The undersigned owner of the existing building located at: 506 MAIN ST. (Address) certifies that BLINI HOXHA (Applicant) operates or intends to operate a business at the above location. The undersigned agrees to permit the Applicant and his contractors or agents to implement the improvements listed on the Façade Improvement Grant Program Application ("the Application") dated 11/11/15.

The undersigned hereby waives any claim against the Houston Downtown Management District ("HDMD") arising out of the use of said grant funds for the purposes set forth in the Application. The undersigned agrees to hold the HDMD harmless for any charges, damages, claims or liens arising out of the Applicant's participation in the Storefront and Streetscape Improvement Grant Program.

In witness whereof, the owner has hereunto set his hand and seal, or if a corporation, has caused this instrument to be signed in its corporate name by its duly authorized officers and its seal to be hereunto affixed by authority of its Board of Directors, if a Partnership by its Partners, if a LLC or LLP, by its Members/Managers, etc. the day and year first above written.

15/21 Japhet Realty Ltd
(Company Name) leave blank if Owner is an Individual

By: _____ (Seal)
Ilan Melnik
Name
Landlord
Title

By: _____ (Seal)
Name
Title

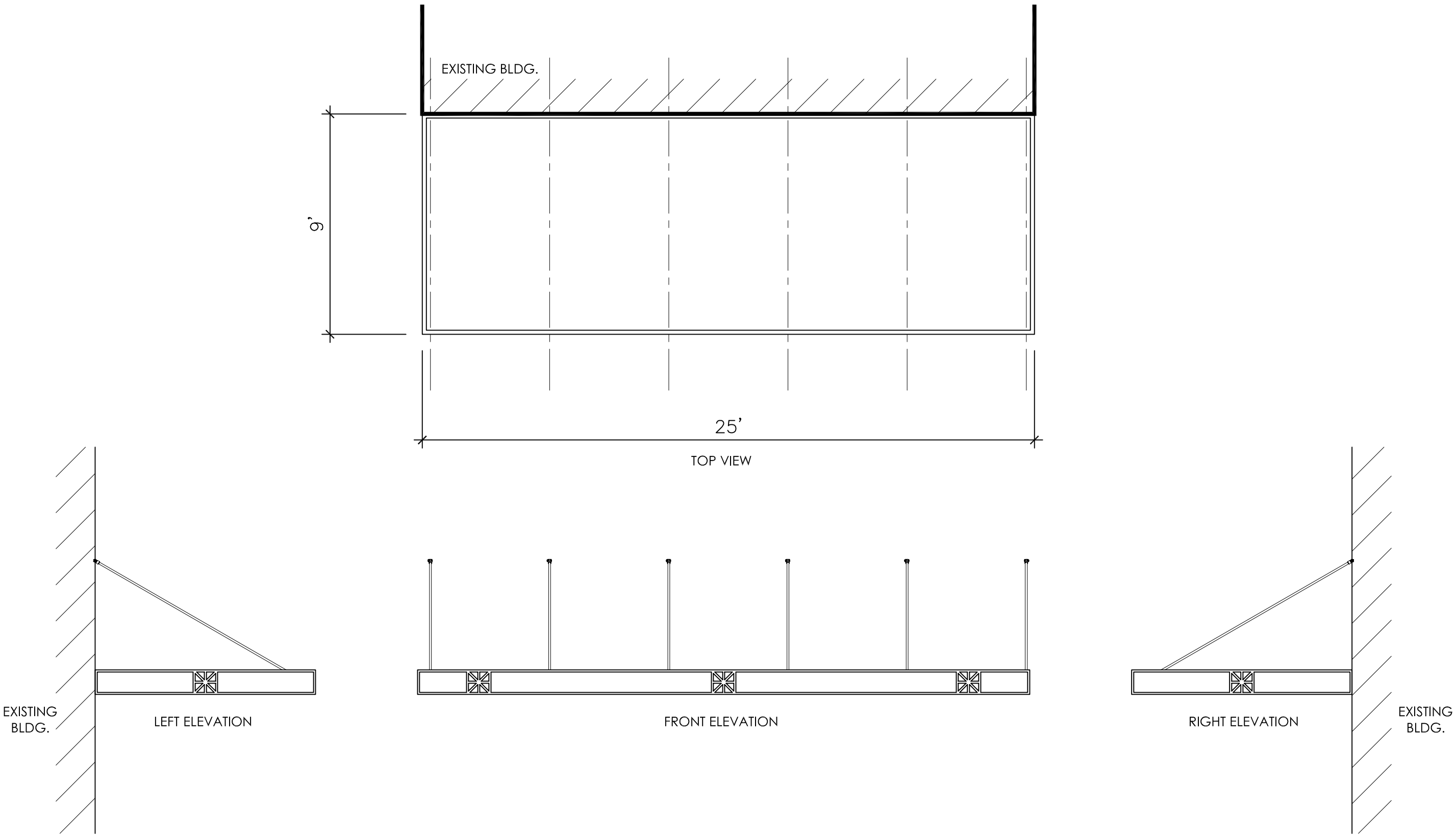

CANOPY PLAN VIEW AND ELEVATIONS

1/4"= 1'-0"

01

REVISIONS

No.	DATE	DESCRIPTION
1	–	–
2	–	–

Copyright REAL Designs, All Rights Reserved, The Duplication, Reproduction, Copying, Sale, Rental, Licensing, or any other distribution or use of these drawing, any portion thereof, or the plans depicted hereon is Strictly Prohibited unless expressly authorized in writing by REAL Designs. REAL Designs is not be held responsible for the architectural and structural design in any way or matter.

REAL
P.O. BOX
23398
Houston, Texas 77228
Ph: 832-654-7862
real_designs@live.com
www.real-designs-inc.com

OWNER:
ibar

PROPOSED METAL CANOPY
AT AN EXISTING
RESTAURANT/BAR LOUNGE
LOCATED AT
506 MAIN STREET
HOUSTON, TEXAS 77002

DRAWING TITLE:
CANOPY PLANS

DATE: 11/20/2015

DESIGN: 8613

DRAWN: 8613

SCALE: 1/4"= 1'-0"

JOB No: 15114060

FILE: F:\REAL\2015\15114060\506 MAIN ST\STRUCT

DRAWING
A1.0

NOTES:

FINISH SHALL BE BRONZE BAKED ENAMEL, WHITE BAKED ENAMEL OR CLEAR ANODIZED

VERIFY ALL DIMENSIONS

FLASHING & SEALANT, CONT. BY OTHERS

ALL FASTENER HOLES NOT OTHERWISE NOTED TO BE FIELD DRILLED

ALL FASTENERS NOT OTHERWISE NOTED ARE CADMIUM PLATED FERROUS OR ALUMINUM

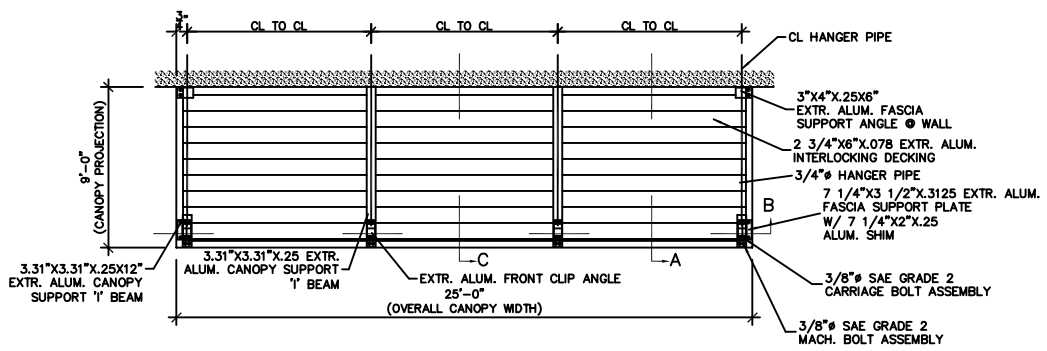

CANOPY PLAN

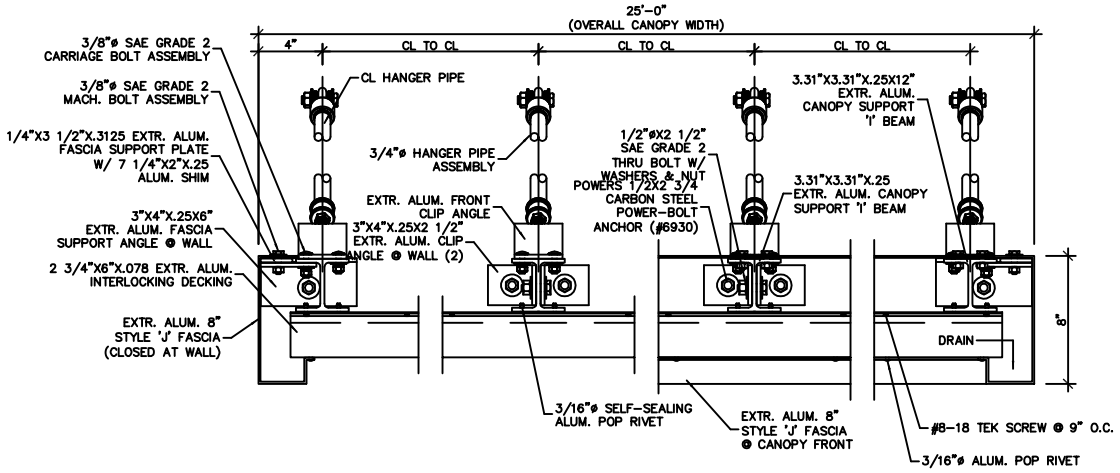

SECTION B

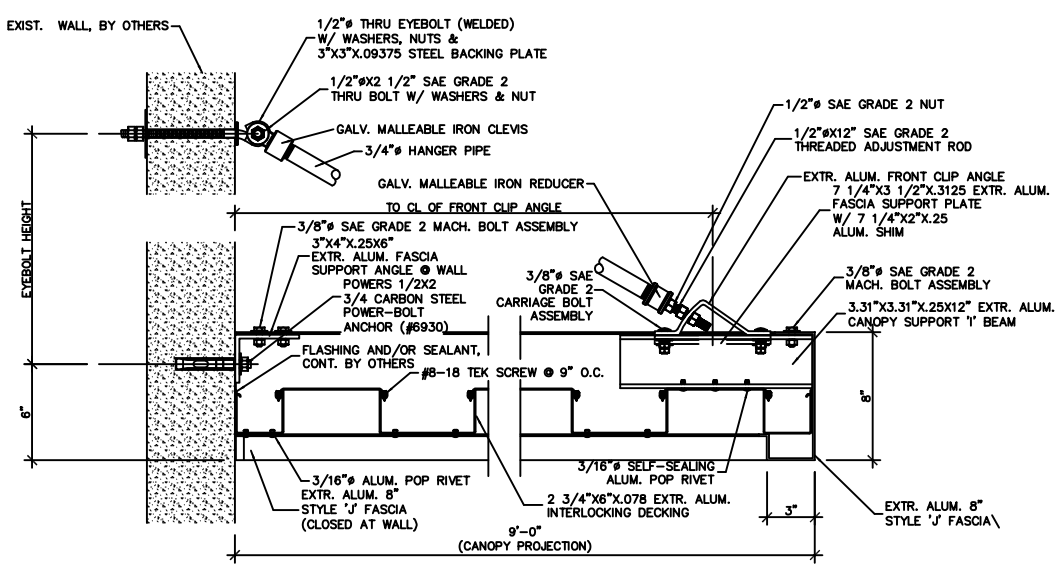

SECTION A

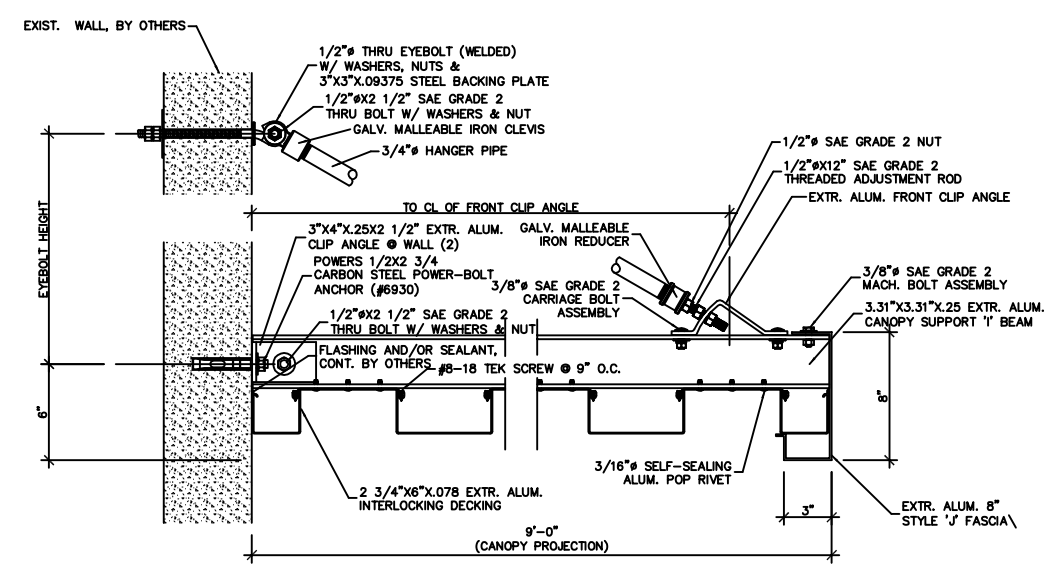

SECTION C

REVISIONS		
No.	DATE	DESCRIPTION
1	–	–
2	–	–

Copyright REAL Designs, All Rights Reserved. The Duplication, Reproduction, Copying, Sale, Rental, Licensing, or any other distribution or use of these drawing, or any portion thereof, or the plans depicted herein, without Prior Written Consent is not authorized in writing by REAL Designs. REAL Designs is not be held responsible for the architectural and structural design in any way or matter.

P.O. BOX
23398
Houston, Texas 77228
Ph: 832-654-7862
[redacted]
www.real-designs-inc.com

OWNER:
ibar

PROPOSED METAL CANOPY AT AN EXISTING RESTAURANT/BAR LOUNGE LOCATED AT 506 MAIN STREET HOUSTON, TEXAS 77002

DRAWING TITLE:
CANOPY PLANS

DATE: 11/20/2015
DESIGN: 8613
DRAWN: 8613
SCALE: 1"= 1'-0"
JOB No: 15114060
FILE: F:\REAL\2015\15114060\506 MAIN ST\STRUCT
DRAWING: S1.0

CANOPY NOTES & DETAILS | 1"= 1'-0" | 01

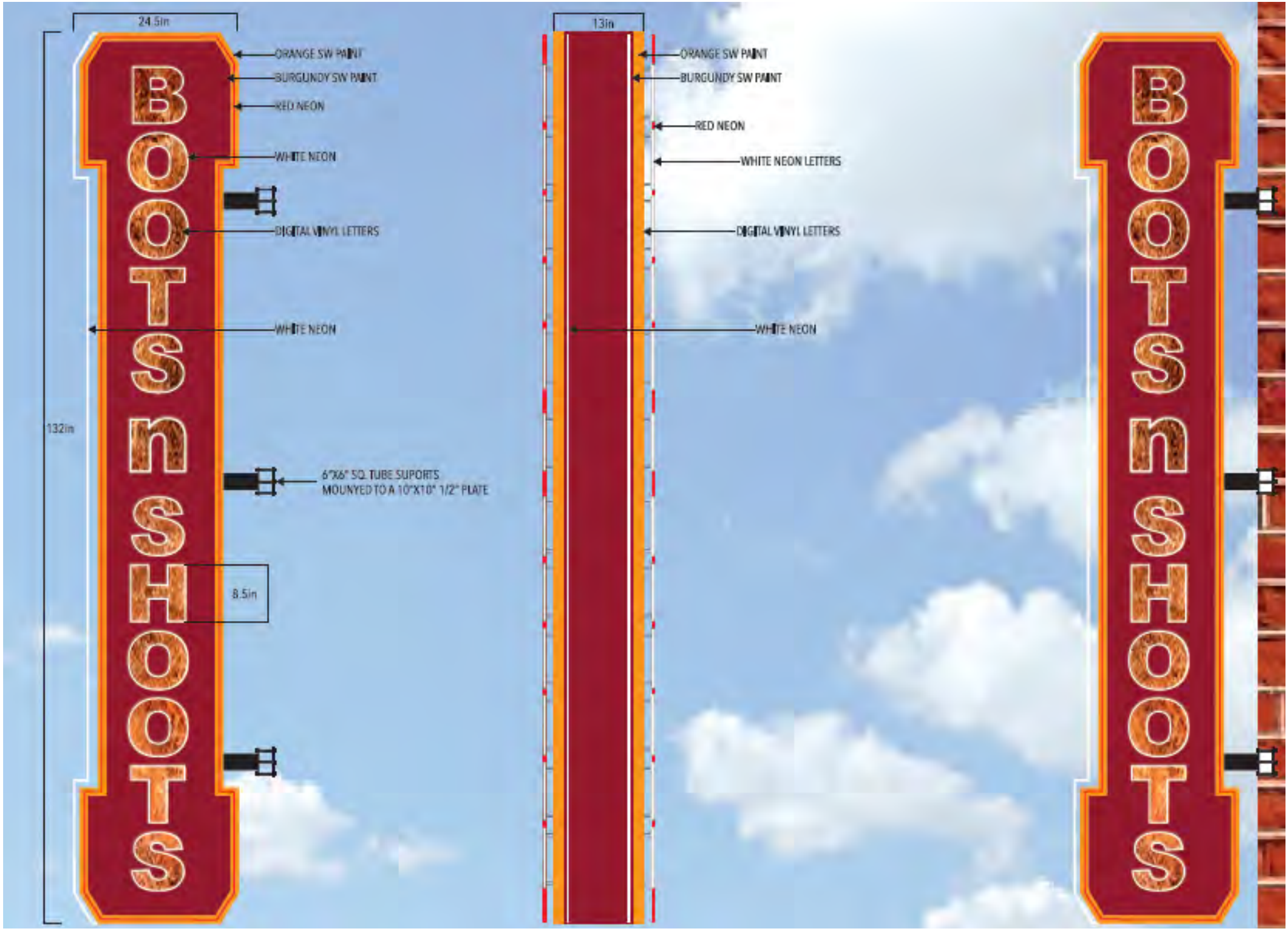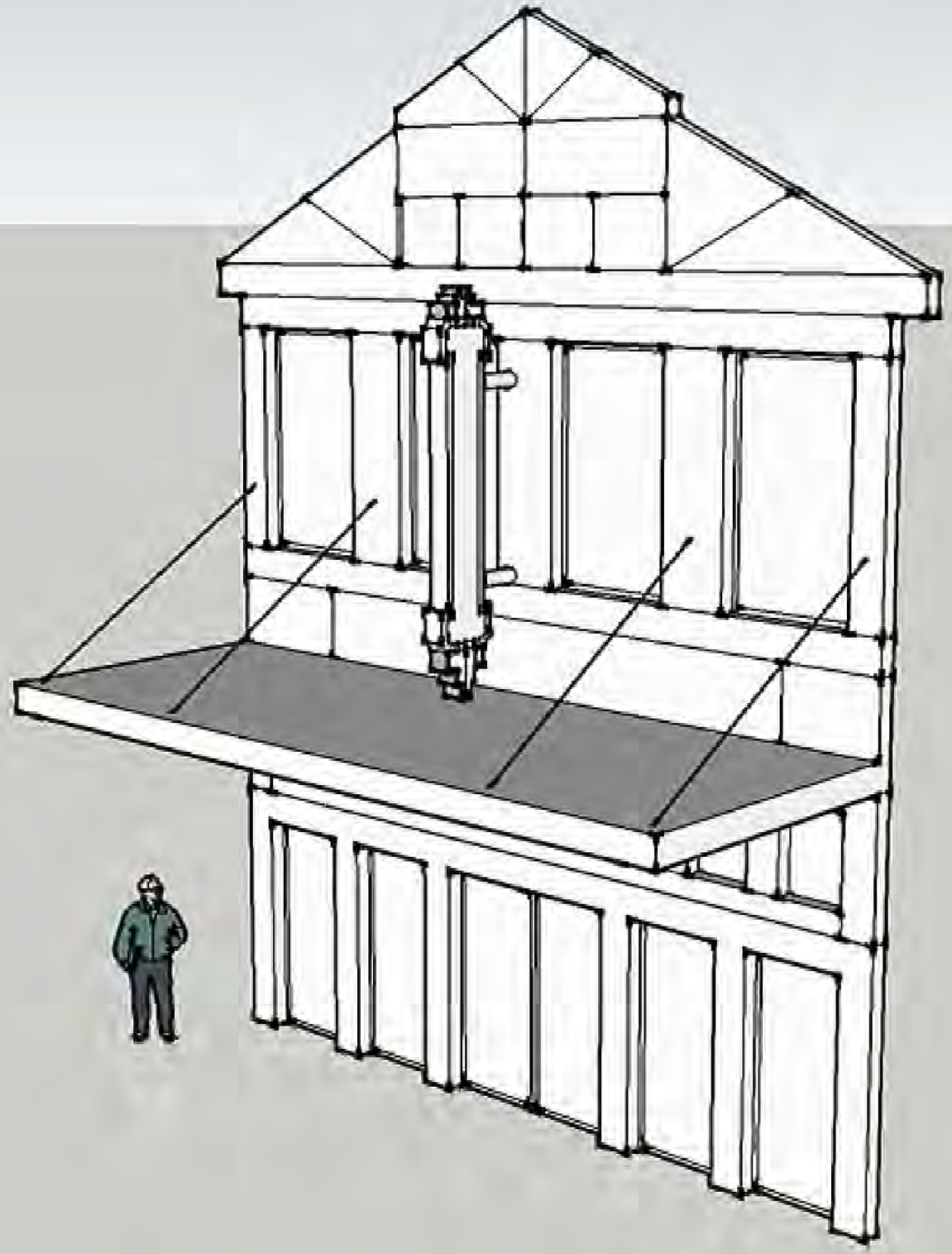
24.5in
13in
132in
8.5in
ORANGE SW PAINT
BURGUNDY SW PAINT
RED NEON
WHITE NEON
DIGITAL VINYL LETTERS
WHITE NEON
6"X6" SQ. TUBE SUPORTS
MOUNYED TO A 10"X10" 1/2" PLATE
ORANGE SW PAINT
BURGUNDY SW PAINT
RED NEON
WHITE NEON LETTERS
DIGITAL VINYL LETTERS
WHITE NEON
BOOTS n SHOOTS
BOOTS n SHOOTS