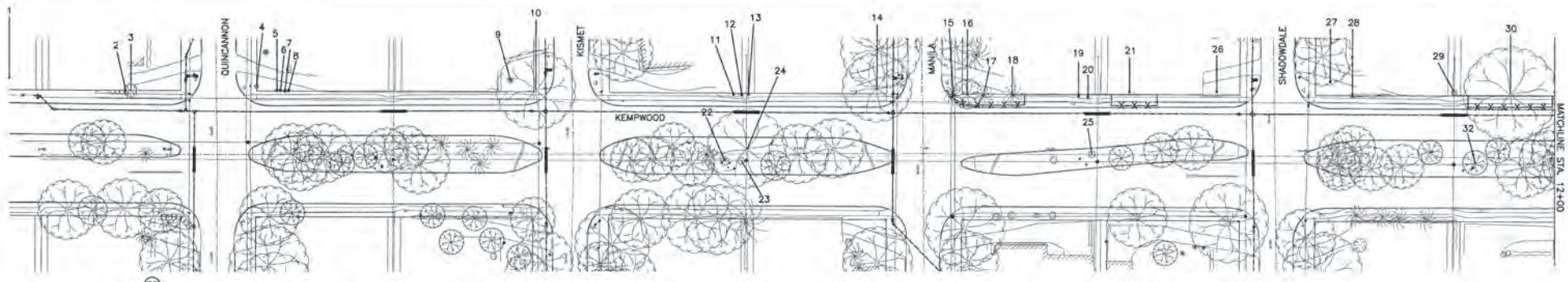

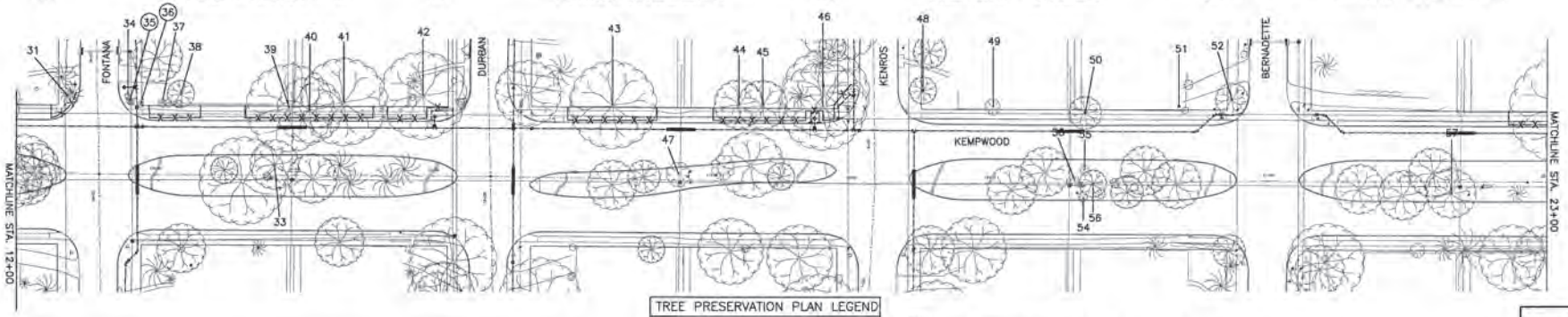

TREE PRESERVATION PLAN LEGEND	
1	TREE NUMBER/LOCATION
①	TREE TO BE REMOVED
-X-X-	TREE PROTECTION FENCE
⊢------⊣	ROOT PRUNING TRENCH
⊙	REPLACEMENT PLANTING SPECIES AND SIZE/TYPE

NOTE:
THIS TREE PROTECTION PLAN WAS DEVELOPED WITH INFORMATION PROVIDED BY DESIGN ENGINEER IN DRAWINGS DATED JANUARY 2013. THE PLAN CONSIDERS ALL FITTINGS, VERTICAL OFFSETS AND AREAS OF NECESSARY EXCAVATION. CHANGES MADE TO DESIGN MAY COMPROMISE THE TREE PROTECTION PLAN. REFER TO SPECIFICATIONS 01562 AND 02915. CONDITION OF EACH TREE IS BASED ON VISUAL EVALUATION AT TIME OF DESIGN. CONDITION AND STRUCTURAL INTEGRITY OF EACH TREE IS NOT GUARANTEED BY DESIGNER AT ANY POINT IN THE FUTURE, AS ENVIRONMENTAL AND MAINTENANCE INFLUENCES ON EACH TREE CAN NOT BE DETERMINED BY DESIGNER.

Tree No.	Location	Description	Comments	Treatment
Trees on Kempwood				
1	2803 Quincannon	10" Live Oak	Private tree, will not be impacted	
2	2803 Quincannon	2" Oleander	Private tree, will not be impacted	
3	2803 Quincannon	12" Crepe Myrtle	Not ordinance tree	
4	2802 Quincannon	3" Arizona Ash	Private tree, will not be impacted	
5	2802 Quincannon	7" Crepe Myrtle	Private tree, will not be impacted	
6	2802 Quincannon	5" Crepe Myrtle	Private tree, will not be impacted	
7	2802 Quincannon	4" Crepe Myrtle	Private tree, will not be impacted	
8	2802 Quincannon	5" Crepe Myrtle	Private tree, will not be impacted	
9	2803 Kismet	10' Palm	Private tree, will not be impacted	
10	2803 Kismet	18" Arizona Ash	Not ordinance tree	
11	2802 Kismet	8" Ligustrum	60% dieback, Not ordinance tree	
12	2802 Kismet	6" Ligustrum	60% dieback, Not ordinance tree	
13	2802 Kismet	6" Ligustrum	60% dieback, Not ordinance tree	
14	2803 Manila	18" Pear	Topped, Private tree, will not be impacted	
15	2802 Manila	12" Pine	Ordinance tree	Fence, Bore waterline
16	2802 Manila	10" Baldcypress	Ordinance tree	Fence, Bore waterline
17	2802 Manila	14" Pine	Ordinance tree	Fence, Bore waterline
18	2802 Manila	14" Pine	Ordinance tree	Fence, Bore waterline
19	2802 Manila	2" Hibiscus	Not ordinance tree	
20	2802 Manila	5" Crepe Myrtle	Not ordinance tree	
21	2803 Shadowdale	18" Willow Oak	Private tree	Fence, Bore waterline
22	Esplanade	4" Crepe Myrtle	Not ordinance tree	
23	Esplanade	4" Crepe Myrtle	Not ordinance tree	
24	Esplanade	25" Chinaberry	30% dieback, Ordinance tree	Hand dig lead
25	Esplanade	5" Crepe Myrtle	Not ordinance tree	
26	2803 Shadowdale	3" Boxwood	Private tree, will not be impacted	
27	2802 Shadowdale	24" Arizona Ash	Dieback, Private, will not be impacted	
28	2802 Shadowdale	8" Photinia	Not ordinance tree	
29	2802 Shadowdale	8" Photinia	Private tree, will not be impacted	
30	2803 Fontana	36" Live Oak	Private tree	Fence, Bore waterline
31	2803 Fontana	12" Pine	Ordinance tree	Remove fire hydrant bonnet, cut stem and barrel 6" below grade. Remove valve box and backfill. Do not excavate to remove entire fire hydrant. Do not cut roots greater than 1" in diameter. Fence, Bore waterline
32	Esplanade	14" Yaupon	Not ordinance tree	
33	Esplanade	10" Savannah Holly	Ordinance tree	Hand dig lead
34	2802 Fontana	6" Crepe Myrtle	Not ordinance tree	
35	2802 Fontana	4" Crepe Myrtle	Not ordinance tree, remove for bends	Remove tree, no replacement required
36	2802 Fontana	2" Crepe Myrtle	Not ordinance tree, remove for bends	Remove tree, no replacement required
37	2802 Fontana	5" Pomegranate	Private tree, will not be impacted	
38	2802 Fontana	18" Water Oak	Private tree	Fence, Bore waterline
39	2802 Fontana	25" Arizona Ash	Ordinance tree	Fence, Bore waterline
40	2803 Durban	15" Arizona Ash	60% dieback, Not ordinance tree	
41	2803 Durban	28" Water Oak	Private tree	Fence, Bore waterline
42	2803 Durban	22" Water Oak	Private tree	Root prune for fire hydrant, Fence, Bore waterline
43	2802 Durban	25" Live Oak	Private tree	Fence, Bore waterline
44	2803 Kenross	14" Water Oak	Private tree	Fence, Bore waterline
45	2803 Kenross	14" Water Oak	Private tree	Fence, Bore waterline
46	2803 Kenross	24" Arizona Ash	Private tree	Root prune for bend, Fence, Bore waterline
47	Esplanade	20" Pomegranate	Ordinance tree	Hand dig lead
48	2802 Kenross	7" Willow Oak	Private tree, will not be impacted	
49	2802 Kenross	6" Crepe Myrtle	Private tree, will not be impacted	
50	2803 Bernadette	14" Mulberry	Not ordinance tree	
51	2803 Bernadette	6" Crepe Myrtle	Private tree, will not be impacted	
52	2803 Bernadette	12" Magnolia	Ordinance tree	Fence
53	Esplanade	4" Crepe Myrtle	Not ordinance tree	
54	Esplanade	3" Crepe Myrtle	Not ordinance tree	
55	Esplanade	6" Crepe Myrtle	Not ordinance tree	
56	Esplanade	5" Yaupon	Not ordinance tree	
57	Esplanade	10" Savannah Holly	Ordinance tree	Keep excavation for lead at least 10' from trunk

S&R INFRASTRUCTURE, LTD.
Texas PE Firm Registration Number F-1582

DESIGN ENGINEER NAME:
ADDRESS:
TELEPHONE: 713-845-5401
TX FIRM NUMBER: F-1582
SURVEYED BY: AMANI ENG., INC.
FB. No. P-5648

C.N. Koehl
Urban Forestry, Inc.
210 Stone Bush Ct. • Katy, Texas 77493
281-391-6022 ckoehl@koehlurbanforestry.com
APPROVED: Craig A Koehl 01-31-2013

CITY OF HOUSTON
DEPARTMENT OF PUBLIC WORKS AND ENGINEERING

WATER LINE REPLACEMENT
IN SPRING SHADOWS WEST AREA

TREE PROTECTION PLAN
SHEET 1 OF 20

WBS NUMBER
S-000035-0129-3

DRAWING SCALE
1"=40'

CITY OF HOUSTON PM
ADEIN MSIGWA, P.E.

SHEET NO. 128 OF 155

50308

DATE: Jan 21, 2013-3:24pm USERNAME: mall FILENAME: 129-SB Spring Shadows West Th-1.dwg

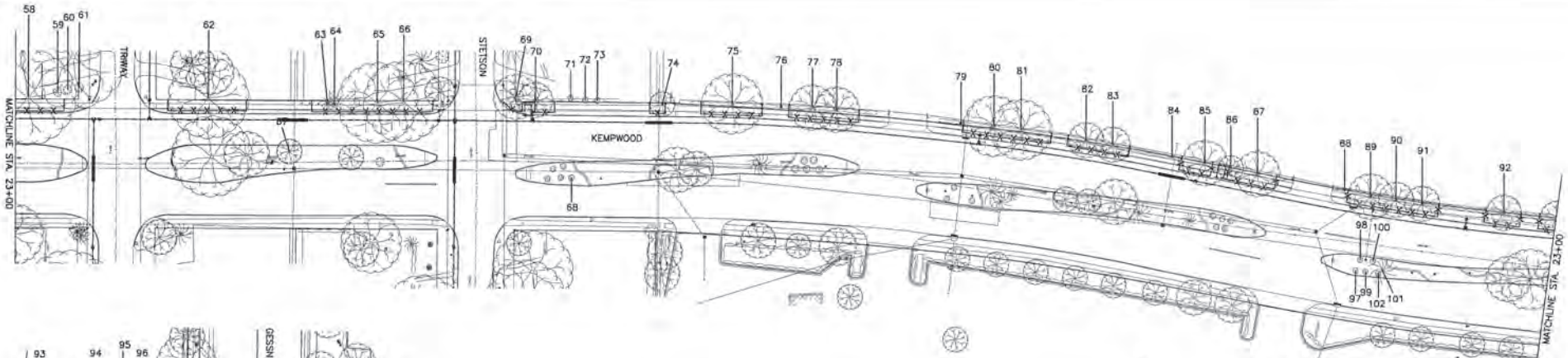

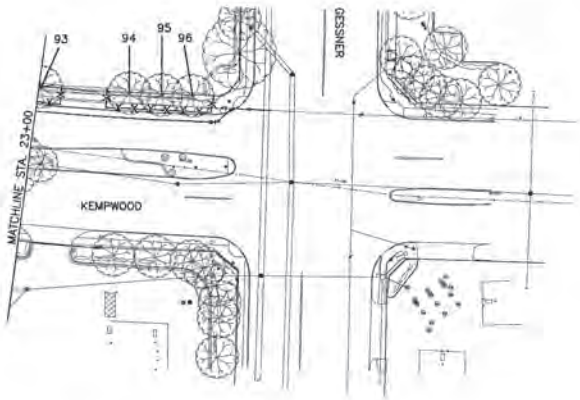

Tree No.	Location	Description	Comments	Treatment
Trees on Kempwood				
58	2803 Triway	26" Arizona Ash	Private tree	Fence, Bore waterline
59	2803 Triway	4" Crepe Myrtle	Private tree, will not be impacted	
60	2803 Triway	9" Crepe Myrtle	Private tree, will not be impacted	
61	2803 Triway	10" Crepe Myrtle	Private tree, will not be impacted	
62	2802 Triway	22" Arizona Ash	Private tree	Fence, Bore waterline
63	2803 Stetson	12" Pine	Ordinance tree	Fence, Bore waterline
64	2803 Stetson	13" Pine	Ordinance tree	Fence, Bore waterline
65	2803 Stetson	26" Arizona Ash	Ordinance tree	Fence, Bore waterline
66	2803 Stetson	20" Arizona Ash	Ordinance tree	Fence, Bore waterline
67	Esplanade	4" Savannah Holly	Ordinance tree	Keep excavation for load at least 3' from trunk
68	Esplanade	4" Crepe Myrtle	Not ordinance tree	
69	2802 Stetson	13" Magnolia	Ordinance tree	Fence, Bore waterline
70	2802 Stetson	18" Pecan	Private tree	Root prune for fire hydrant, Fence, Bore waterline
71	2802 Stetson	4" Bottlebrush	Not ordinance tree	
72	2802 Stetson	2" Japanese Magnolia	Private tree	
73	2802 Stetson	4" Crepe Myrtle	Private tree, will not be impacted	
74	2801 Gessner	8" Green Ash	Ordinance tree	Fence, Bore waterline
75	2801 Gessner	18" Shumard Oak	Private tree	Fence, Bore waterline
76	2801 Gessner	4" Ligustrum	Private tree, will not be impacted	
77	2801 Gessner	14" Shumard Oak	Private tree	Fence, Bore waterline
78	2801 Gessner	16" Shumard Oak	Private tree	Fence, Bore waterline
79	2801 Gessner	4" Ligustrum	Private tree, will not be impacted	
80	2801 Gessner	16" Shumard Oak	Private tree	Fence, Bore waterline
81	2801 Gessner	12" Shumard Oak	Private tree	Fence, Bore waterline
82	2801 Gessner	10" Shumard Oak	Private tree	Fence, Bore waterline
83	2801 Gessner	12" Shumard Oak	Private tree	Fence, Bore waterline
84	2801 Gessner	4" Ligustrum	Not ordinance tree	
85	2801 Gessner	16" Shumard Oak	Ordinance tree	Root prune for fire hydrant, Fence, Bore waterline
86	2801 Gessner	8" Shumard Oak	Ordinance tree	Root prune for fire hydrant, Fence, Bore waterline
87	2801 Gessner	16" Shumard Oak	Ordinance tree	Fence, Bore waterline
88	2801 Gessner	2" Pittosporum	Not ordinance tree	
89	2801 Gessner	16" Shumard Oak	20% dieback, Ordinance tree	Fence, Bore waterline
90	2801 Gessner	12" Shumard Oak	Ordinance tree	Fence, Bore waterline
91	2801 Gessner	11" Shumard Oak	Ordinance tree	Fence, Bore waterline
92	2801 Gessner	12" Shumard Oak	Ordinance tree	Fence, Bore waterline
93	2801 Gessner	14" Shumard Oak	30% dieback, Ordinance tree	Fence, Bore waterline
94	2801 Gessner	14" Shumard Oak	Ordinance tree	Fence, Bore waterline
95	2801 Gessner	12" Shumard Oak	20% dieback, Ordinance tree	Fence, Bore waterline
96	2801 Gessner	12" Shumard Oak	30% dieback, Ordinance tree	Fence, Bore waterline
97	Esplanade	4" Crepe Myrtle	Not ordinance tree	
98	Esplanade	4" Crepe Myrtle	Not ordinance tree	
99	Esplanade	4" Crepe Myrtle	Not ordinance tree	
100	Esplanade	4" Crepe Myrtle	Not ordinance tree	
101	Esplanade	4" Crepe Myrtle	Not ordinance tree	
102	Esplanade	4" Crepe Myrtle	Not ordinance tree	

TREE PRESERVATION PLAN LEGEND

- TREE NUMBER/LOCATION
- TREE TO BE REMOVED
- TREE PROTECTION FENCE
- ROOT PRUNING TRENCH
- REPLACEMENT PLANTING SPECIES AND SIZE/TYPE

NOTE:
THIS TREE PROTECTION PLAN WAS DEVELOPED WITH INFORMATION PROVIDED BY DESIGN ENGINEER IN DRAWINGS DATED JANUARY 2013. THE PLAN CONSIDERS ALL FITTINGS, VERTICAL OFFSETS AND AREAS OF NECESSARY EXCAVATION. CHANGES MADE TO DESIGN MAY COMPROMISE THE TREE PROTECTION PLAN. REFER TO SPECIFICATIONS 01562 AND 02915. CONDITION OF EACH TREE IS BASED ON VISUAL EVALUATION AT TIME OF DESIGN. CONDITION AND STRUCTURAL INTEGRITY OF EACH TREE IS NOT GUARANTEED BY DESIGNER AT ANY POINT IN THE FUTURE, AS ENVIRONMENTAL AND MAINTENANCE INFLUENCES ON EACH TREE CAN NOT BE DETERMINED BY DESIGNER.

S&B INFRASTRUCTURE, LTD.

DESIGN ENGINEER NAME:
ADDRESS:
TELEPHONE: 713-845-5401
TX FIRM NUMBER: F-1582
SURVEYED BY: AMANI ENG. INC.
FB No. P-5648

C.N. Koehl
Urban Forestry, Inc.
210 Stone Bush Ct. • Katy, Texas 77493
281-391-0022 ckoehl@koehlurbanforestry.com
APPROVED: Craig N Koehl 01-24-2013

CITY OF HOUSTON
DEPARTMENT OF PUBLIC WORKS AND ENGINEERING

WATER LINE REPLACEMENT
IN SPRING SHADOWS WEST AREA

TREE PROTECTION PLAN
SHEET 2 OF 20

WBS NUMBER
S-000035-0129-3

DRAWING SCALE
1"=40'

CITY OF HOUSTON PM
JOHN MSIGWA, P.E.

50308
HOUSTON, TEXAS

SHEET NO. 127 OF 155

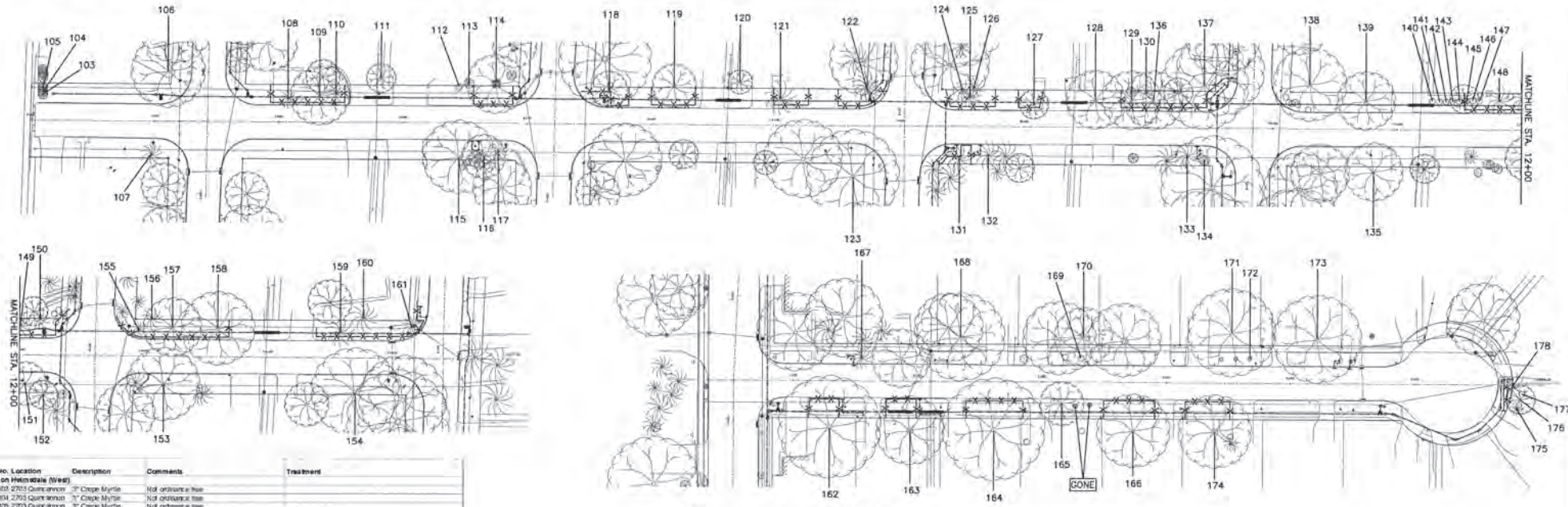

Tree No. Location	Description	Comments	Treatment
Trees on Helmsdale (West)			
103 2703 Quincannon	3" Crape Myrtle	Not ordinance tree	
104 2703 Quincannon	3" Crape Myrtle	Not ordinance tree	
105 2703 Quincannon	3" Crape Myrtle	Not ordinance tree	
106 2703 Quincannon	26" Willow Oak	Private tree	Fence, Bore waterline
107 2631 Quincannon	20" Pine	Ordinance tree	Remove fire hydrant bonnet, cut stem and barrel 6" below grade. Remove valve box and backfill. Do not excavate to remove entire fire hydrant. Do not cut roots greater than 1" in diameter.
108 2702 Quincannon	10" Pine	Ordinance tree	Fence, Bore waterline
109 2702 Quincannon	12" Shumard Oak	Ordinance tree	Fence, Bore waterline
110 2702 Quincannon	13" Pine	Ordinance tree	Fence, Bore waterline
111 2703 Quincannon	12" Yaupon	Private tree, will not be impacted	
112 2703 Kismet	2" Hibiscus	Not ordinance tree	
113 2703 Kismet	4" Crape Myrtle	Private tree, will not be impacted	
114 2703 Kismet	15" Arizona Ash	Private tree	Fence, Bore waterline
115 2631 Kismet	26" Water Oak	Ordinance tree	Root prune for lead
116 2631 Kismet	14" Live Oak	Ordinance tree	Root prune for lead
117 2631 Kismet	14" Pine	Ordinance tree	Remove fire hydrant bonnet, cut stem and barrel 6" below grade. Remove valve box and backfill. Do not excavate to remove entire fire hydrant. Do not cut roots greater than 1" in diameter.
118 2702 Kismet	12" Water Oak	Ordinance tree	Root prune for fire hydrant, Fence, Bore waterline
119 2702 Kismet	14" Live Oak	Topped. Private tree	Fence, Bore waterline
120 2703 Manila	12" Waterline	Private tree, will not be impacted	
121 2703 Manila	28" Pine	Ordinance tree	Fence, Bore waterline
122 2703 Manila	14" Pine	Cavity at base. Ordinance tree	Hand dig for bend, Fence, Bore waterline
123 2631 Manila	40" Willow Oak	Private tree, will not be impacted	
124 2702 Manila	10" Pine	Private tree	Fence, Bore waterline
125 2702 Manila	14" Pine	Ordinance tree	Fence, Bore waterline
126 2702 Manila	12" Pine	Private tree	Fence, Bore waterline
127 2702 Manila	10" Magnolia	Ordinance tree	Fence, Bore waterline
128 2703 Shadowdale	12" Tallow	Not ordinance tree	
129 2703 Shadowdale	12" Tallow	Not ordinance tree	
130 2703 Shadowdale	8" Palm	Not ordinance tree	
131 2630 Manila	14" Pine	Ordinance tree	Root prune for waterline, Fence
132 2630 Manila	16" Pine	Ordinance tree	Root prune for lead
133 2631 Manila	14" Pine	Ordinance tree	Root prune for lead
134 2631 Manila	2" Water Oak	Ordinance tree	Keep excavation for lead at least 5' from trunk
135 2630 Shadowdale	25" Silver Maple	30% dieback. Private, will not be impacted	
136 2703 Shadowdale	18" Water Oak	Ordinance tree	Fence, Bore waterline
137 2703 Shadowdale	20" Water Oak	Private tree	Root prune for bend, Fence, Bore waterline
138 2702 Shadowdale	22" Willow Oak	Private tree	Fence, Bore waterline
139 2702 Shadowdale	20" Water Oak	Ordinance tree	Fence, Bore waterline
140 2703 Fontana	2" Pampas	Not ordinance tree	
141 2703 Fontana	2" Pampas	Not ordinance tree	
142 2703 Fontana	2" Pampas	Not ordinance tree	
143 2703 Fontana	2" Pampas	Not ordinance tree	
144 2703 Fontana	2" Pampas	Not ordinance tree	
145 2703 Fontana	6" Arizona Ash	Not ordinance tree	
146 2703 Fontana	2" Pampas	Not ordinance tree	
147 2703 Fontana	2" Pampas	Not ordinance tree	
148 2703 Fontana	24" Pine	Ordinance tree	Fence, Bore waterline
149 2703 Fontana	10" Pine	Ordinance tree	Fence, Bore waterline
150 2703 Fontana	18" Pine	Ordinance tree	Hand dig for hydrant, Fence, Bore waterline
151 2631 Fontana	12" Camphor	Not ordinance tree	
152 2631 Fontana	6" Magnolia	70% dieback. Private, will not be impacted	

Tree No. Location	Description	Comments	Treatment
Trees on Helmsdale (West)			
153 2630 Fontana	20" Water Oak	Ordinance tree	Hand dig lead, Root prune for fire hydrant
154 2631 Durban	28" Arizona Ash	70% dieback. No protection warranted	
155 2702 Fontana	9" Pine	Ordinance tree	Fence, Bore waterline
156 2702 Fontana	14" Pine	Private tree	Fence, Bore waterline
157 2702 Fontana	18" Water Oak	Ordinance tree	Fence, Bore waterline
158 2702 Fontana	26" Water Oak	Ordinance tree	Fence, Bore waterline
159 2703 Fontana	15" Pine	Ordinance tree	Fence, Bore waterline
160 2703 Fontana	21" Pine	Private tree	Fence, Bore waterline
161 2703 Fontana	18" Pine	Ordinance tree	Root prune for fire hydrant, Fence, Bore waterline
Helmsdale (East)			
162 10311 Helmsdale	40" Live Oak	Private tree	Root prune for tap & lead, Fence, Bore waterline
163 10307 Helmsdale	25" Live Oak	Private tree	Root prune for tap & lead, Fence, Bore waterline
164 10300 Helmsdale	34" Water Oak	Private tree	Fence, Bore waterline
165 10251 Helmsdale	15" Arizona Ash	Not ordinance tree	
166 10247 Helmsdale	22" Water Oak	Private tree	Fence, Bore waterline
167 10306 Helmsdale	12" Pine	Ordinance tree	Root prune for lead
168 10302 Helmsdale	24" Tallow	Private tree, will not be impacted	
169 10250 Helmsdale	1" Crape Myrtle	Not ordinance tree	
170 10250 Helmsdale	15" Water Oak	Private tree, will not be impacted	
171 10246 Helmsdale	36" Water Oak	Private tree, will not be impacted	
172 10246 Helmsdale	2" Crape Myrtle	Not ordinance tree	
173 10238 Helmsdale	45" Live Oak	Private tree	Root prune for lead
174 10243 Helmsdale	25" Live Oak	Private tree	Fence, Bore waterline
175 10227 Helmsdale	3" Sago	Private tree, will not be impacted	
176 10227 Helmsdale	10" Pecan	Private tree	Root prune for waterline, Fence
177 10227 Helmsdale	1" Sago	Private tree, will not be impacted	
178 10227 Helmsdale	26" Pine	Private tree	Root prune for waterline, Fence

TREE PRESERVATION PLAN LEGEND

- TREE NUMBER/LOCATION
- TREE TO BE REMOVED
- TREE PROTECTION FENCE
- ROOT PRUNING TRENCH
- REPLACEMENT PLANTING SPECIES AND SIZE/TYPE

NOTE:
THIS TREE PROTECTION PLAN WAS DEVELOPED WITH INFORMATION PROVIDED BY DESIGN ENGINEER IN DRAWINGS DATED JANUARY 2013. THE PLAN CONSIDERS ALL FITTINGS, VERTICAL OFFSETS AND AREAS OF NECESSARY EXCAVATION. CHANGES MADE TO DESIGN MAY COMPROMISE THE TREE PROTECTION PLAN. REFER TO SPECIFICATIONS 01562 AND 02915. CONDITION OF EACH TREE IS BASED ON VISUAL EVALUATION AT TIME OF DESIGN. CONDITION AND STRUCTURAL INTEGRITY OF EACH TREE IS NOT GUARANTEED BY DESIGNER AT ANY POINT IN THE FUTURE, AS ENVIRONMENTAL AND MAINTENANCE INFLUENCES ON EACH TREE CAN NOT BE DETERMINED BY DESIGNER.

S&B INFRASTRUCTURE, LTD.
Texas PE Firm Registration Number F-1582

DESIGN ENGINEER NAME:
ADDRESS:
TELEPHONE: 713-845-5401
TX FIRM NUMBER: F-1582
SURVEYED BY: AMANI ENG. INC.
FB No. P-5648

C.N. Koehl
Urban Forestry, Inc.
210 Stone Bush Ct. • Katy, Texas 77493
281-391-0822 cnkoehl@koehlurbanforestry.com
APPROVED: Craig A. Koehl 01-23-2013

CITY OF HOUSTON
DEPARTMENT OF PUBLIC WORKS AND ENGINEERING

WATER LINE REPLACEMENT
IN SPRING SHADOWS WEST AREA

TREE PROTECTION PLAN
SHEET 3 OF 20

WBS NUMBER
S-000035-0129-3

DRAWING SCALE
1"=40'

CITY OF HOUSTON PM
JOHN MSIGWA, P.E.

SHEET NO. 128 OF 155

50308
HOUSTON, TEXAS

DATE: Jan 21, 2013-3:34pm USERNAME: mab FILENAME: 129-50 Spring Shadows Reg 3F-1.dwg

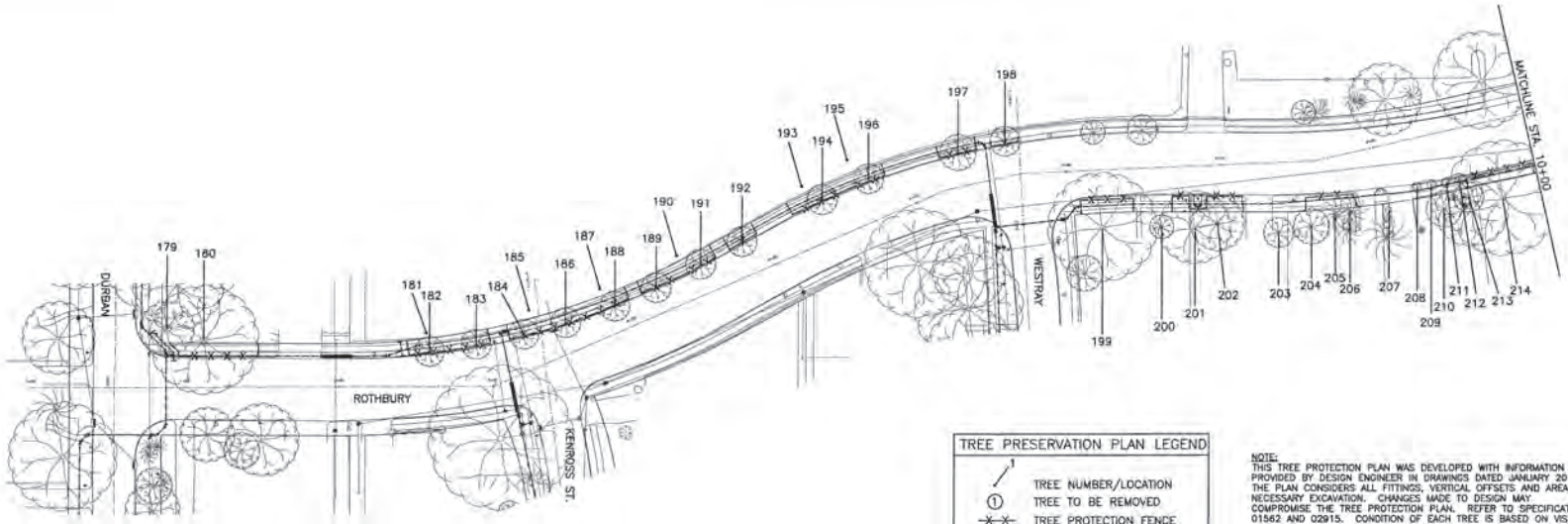

TREE PRESERVATION PLAN LEGEND	
1	TREE NUMBER/LOCATION
①	TREE TO BE REMOVED
-X-X-	TREE PROTECTION FENCE
⊢-----⊣	ROOT PRUNING TRENCH
⊙	REPLACEMENT PLANTING SPECIES AND SIZE/TYPE

NOTE:
THIS TREE PROTECTION PLAN WAS DEVELOPED WITH INFORMATION PROVIDED BY DESIGN ENGINEER IN DRAWINGS DATED JANUARY 2013. THE PLAN CONSIDERS ALL FITTINGS, VERTICAL OFFSETS AND AREAS OF NECESSARY EXCAVATION. CHANGES MADE TO DESIGN MAY COMPROMISE THE TREE PROTECTION PLAN. REFER TO SPECIFICATIONS 01562 AND 02915. CONDITION OF EACH TREE IS BASED ON VISUAL EVALUATION AT TIME OF DESIGN. CONDITION AND STRUCTURAL INTEGRITY OF EACH TREE IS NOT GUARANTEED BY DESIGNER AT ANY POINT IN THE FUTURE, AS ENVIRONMENTAL AND MAINTENANCE INFLUENCES ON EACH TREE CAN NOT BE DETERMINED BY DESIGNER.

Tree No. Location	Description	Comments	Treatment
Trees on Rothbury			
179 2818 Durban	8" Magnolia	Private tree	Root prune for waterline, Fence, Clearance prune
180 2818 Durban	36" Water Oak	Private tree	Fence, Bore waterline
181 2601 Stetson	18" Live Oak	Private tree	Root prune for tap & lead, Fence, Bore waterline
182 2601 Stetson	4" Live Oak	Ordinance tree	Fence, Bore waterline
183 2601 Stetson	5" Live Oak	Ordinance tree	Fence, Bore waterline
184 2601 Stetson	5" Live Oak	Ordinance tree	Fence, Bore waterline
185 2601 Stetson	16" Live Oak	Private tree	Fence, Bore waterline
186 2601 Stetson	15" Live Oak	Ordinance tree	Fence, Bore waterline
187 2601 Stetson	14" Live Oak	Private tree	Fence, Bore waterline
188 2601 Stetson	5" Live Oak	Ordinance tree	Fence, Bore waterline
189 2601 Stetson	4" Live Oak	Ordinance tree	Fence, Bore waterline
190 2601 Stetson	14" Live Oak	Private tree	Fence, Bore waterline
191 2601 Stetson	5" Live Oak	Ordinance tree	Fence, Bore waterline
192 2601 Stetson	5" Live Oak	Ordinance tree	Fence, Bore waterline
193 2601 Stetson	14" Live Oak	Private tree	Fence, Bore waterline
194 2601 Stetson	4" Live Oak	Ordinance tree	Fence, Bore waterline
195 2601 Stetson	20" Arizona Ash	Private tree	Fence, Bore waterline
196 2601 Stetson	4" Live Oak	Ordinance tree	Fence, Bore waterline
197 2601 Stetson	7" Live Oak	Ordinance tree	Fence, Bore waterline
198 2601 Stetson	6" Live Oak	Ordinance tree	Fence
199 10411 Rothbury	30" Live Oak	Private tree	Fence, Bore waterline
200 10411 Rothbury	5" Live Oak	Private tree, will not be impacted	
201 10411 Rothbury	14" Magnolia	40% dieback, Private tree	Root prune for tap & lead, Fence, Bore waterline
202 10407 Rothbury	10" Pecan	Private tree	Fence, Bore waterline
203 10407 Rothbury	10" Pomegranate	Private tree, will not be impacted	
204 10403 Rothbury	5" Japanese Magnolia	Private tree, will not be impacted	
205 10403 Rothbury	18" Pine	Private tree	Fence, Bore waterline
206 10403 Rothbury	24" Pine	Private tree	Fence, Bore waterline
207 10327 Rothbury	2" Crepe Myrtle	Private tree, will not be impacted	
208 10327 Rothbury	8" Crepe Myrtle	Not ordinance tree	
209 10327 Rothbury	6" Crepe Myrtle	Not ordinance tree	
210 10327 Rothbury	12" Magnolia	Private tree, will not be impacted	
211 10327 Rothbury	4" Crepe Myrtle	Not ordinance tree	
212 10327 Rothbury	5" Crepe Myrtle	Not ordinance tree	
213 10327 Rothbury	5" Live Oak	Private tree, will not be impacted	
214 10323 Rothbury	28" Arizona Ash	Private tree	Fence, Bore waterline

S&B INFRASTRUCTURE, LTD.
Texas PE Firm Registration Number: F-1582

DESIGN ENGINEER NAME:
ADDRESS:
TELEPHONE: 713-845-5401
TX FIRM NUMBER: F-1582
SURVEYED BY: AMANI ENG. INC.
FS No. F-5646

C.N. Koehl
Urban Forestry, Inc
210 Stone Brush Ct. • Katy, Texas 77493
281-391-0022 ckoehl@koehlurbanforestry.com
APPROVED: Craig A. Koehl 01-21-2013

CITY OF HOUSTON
DEPARTMENT OF PUBLIC WORKS AND ENGINEERING

WATER LINE REPLACEMENT
IN SPRING SHADOWS WEST AREA

TREE PROTECTION PLAN
SHEET 4 OF 20

WBS NUMBER
S-000035-0129-3

DRAWING SCALE
1"=40'

CITY OF HOUSTON PM
JOHN MSIGWA, P.E.

SHEET NO. 129 OF 155

50308
HOUSTON, TEXAS

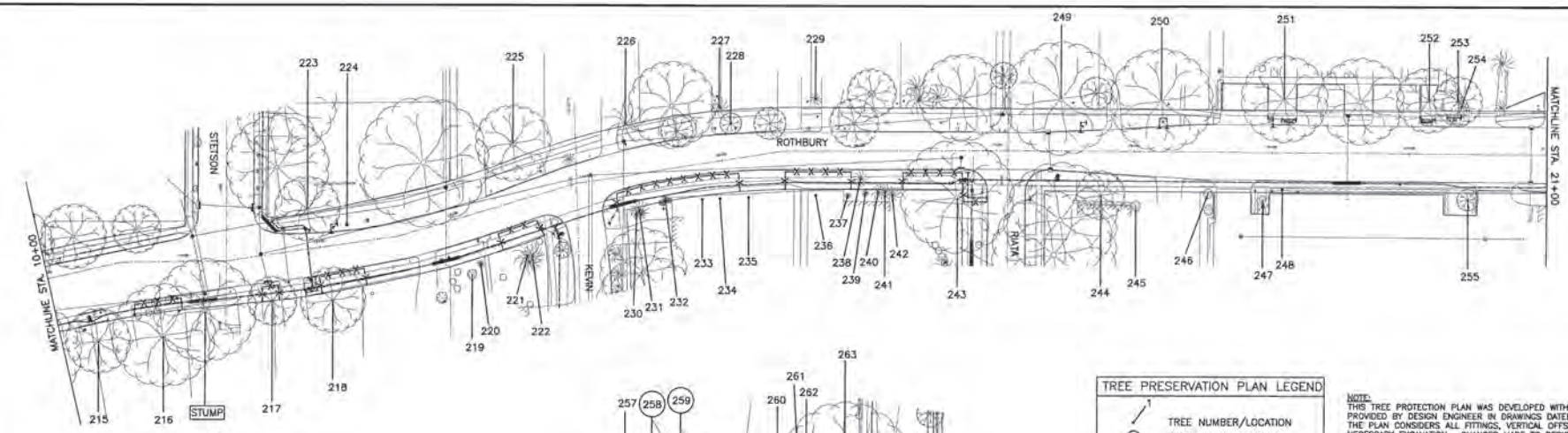

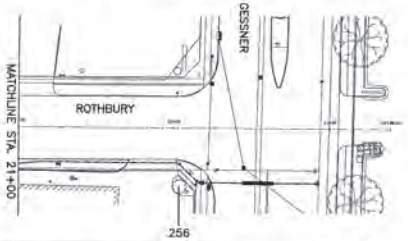

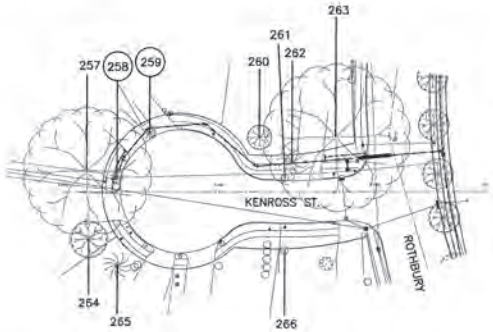

TREE PRESERVATION PLAN LEGEND

- TREE NUMBER/LOCATION
- TREE TO BE REMOVED
- TREE PROTECTION FENCE
- ROOT PRUNING TRENCH
- REPLACEMENT PLANTING SPECIES AND SIZE/TYPE

NOTE:
THIS TREE PROTECTION PLAN WAS DEVELOPED WITH INFORMATION PROVIDED BY DESIGN ENGINEER IN DRAWINGS DATED JANUARY 2013. THE PLAN CONSIDERS ALL FITTINGS, VERTICAL OFFSETS AND AREAS OF NECESSARY EXCAVATION. CHANGES MADE TO DESIGN MAY COMPROMISE THE TREE PROTECTION PLAN. REFER TO SPECIFICATIONS 01582 AND 02915. CONDITION OF EACH TREE IS BASED ON VISUAL EVALUATION AT TIME OF DESIGN. CONDITION AND STRUCTURAL INTEGRITY OF EACH TREE IS NOT GUARANTEED BY DESIGNER AT ANY POINT IN THE FUTURE, AS ENVIRONMENTAL AND MAINTENANCE INFLUENCES ON EACH TREE CAN NOT BE DETERMINED BY DESIGNER.

Tree No.	Location	Description	Comments	Treatment
Trees on Rothbury				
215	10319 Rothbury	16" Pecan	Private tree, will not be impacted	
216	10319 Rothbury	25" Arizona Ash	Private tree	Fence, Bore waterline
217	10315 Rothbury	15" Water Oak	Ordinance tree	Fence, Bore waterline
218	10311 Rothbury	22" Arizona Ash	Private tree	Fence, Bore waterline
219	10303 Rothbury	2" Crepe Myrtle	Private tree, will not be impacted	
220	10303 Rothbury	1" Sago	Private tree, will not be impacted	
221	10303 Rothbury	16" Pine	Private tree	Fence, Bore waterline
222	10303 Rothbury	12" Pine	Private tree	Fence, Bore waterline
223	2603 Stetson	20" Arizona Ash	Ordinance tree	Root prune for lead and bench
224	2602 Stetson	3" Crepe Myrtle	Not ordinance tree	
225	10302 Rothbury	30" Live Oak	Private tree, will not be impacted	
226	10250 Rothbury	15" Palm	Private tree, will not be impacted	
227	10248 Rothbury	15" Arborvitae	Private tree, will not be impacted	
228	10242 Rothbury	5" Pine	Not ordinance tree	
229	10238 Rothbury	12" Arborvitae	Private tree, will not be impacted	
230	2574 Kewn	8" Pine	Private tree	Fence, Bore waterline
231	2574 Kewn	14" Pine	Private tree	Fence, Bore waterline
232	2574 Kewn	3" Japanese Magnolia	Not ordinance tree	
233	2574 Kewn	12" Pine	Ordinance tree	Fence, Bore waterline
234	2574 Kewn	10" Pine	Private tree	Fence, Bore waterline
235	2574 Kewn	14" Ligustrum	Private tree, will not be impacted	Fence, Bore waterline
236	2567 Ruta	18" Water Oak	Ordinance tree	Fence, Bore waterline
237	2567 Ruta	2" Juniper	Not ordinance tree	
238	2567 Ruta	6" Bald cypress	Ordinance tree	Fence, Bore waterline
239	2567 Ruta	2" Juniper	Private tree, will not be impacted	
240	2567 Ruta	2" Juniper	Not ordinance tree	
241	2567 Ruta	1" Juniper	Dead, Not ordinance tree	
242	2567 Ruta	4" Juniper	Not ordinance tree	
243	2567 Ruta	19" Live Oak	Private tree	Root prune for bend, Fence, Bore waterline
244	2566 Ruta	12" Pear	Private tree, will not be impacted	
245	2566 Ruta	12" Crepe Myrtle	Private tree, will not be impacted	
246	2565 Gessner	5" Crepe Myrtle	Private tree, will not be impacted	
247	2565 Gessner	2" Crepe Myrtle	Private tree, will not be impacted	
248	2565 Gessner	4" Ligustrum	Not ordinance tree	
249	10230 Rothbury	36" Arizona Ash	Private tree	Root prune for lead
250	10226 Rothbury	32" Arizona Ash	Private tree	Root prune for lead
251	Not available	30" Live Oak	Private tree	Root prune for lead
252	Not available	26" Live Oak	Private tree	Root prune for lead
253	Not available	14" Live Oak	Private tree	Root prune for lead
254	Not available	10" Palm	Private tree, will not be impacted	
255	2565 Gessner	4" Ligustrum	Private tree, will not be impacted	
256	2565 Gessner	8" Photosposum	Private tree, will not be impacted	

Tree No.	Location	Description	Comments	Treatment
Trees on Kenross				
257	2503 Kenross	28" Live Oak	Private tree	Root prune for waterline
258	2503 Kenross	1" Sago	Not ordinance tree, remove for bench	Remove tree, no replacement required
259	2503 Kenross	2" Sago	Not ordinance tree, remove for bench	Remove tree, no replacement required
260	2511 Kenross	10" Pear	Private tree, will not be impacted	
261	2511 Kenross	1" Boxwood	Not ordinance tree	
262	2511 Kenross	2" Sago	Not ordinance tree	
263	2511 Kenross	28" Live Oak	Private tree	Root prune for waterline
264	2502 Kenross	3" Cherry laurel	Private tree, will not be impacted	
265	2502 Kenross	30" Palm	Private tree, will not be impacted	
266	2514 Kenross	1" Esperanza	Private tree, will not be impacted	

S&B INFRASTRUCTURE, LTD.
Texas PE Firm Registration Number F-1582

DESIGN ENGINEER NAME:
ADDRESS:
TELEPHONE: 713-845-5401
TX FIRM NUMBER: F-1582
SURVEYED BY: AMANI ENG. INC.,
FB No. P-5848

C.N. Koehl
Urban Forestry, Inc.
210 Stone Bush Ct. • Katy, Texas 77493
281-391-0022 ckoehl@koehlurbanforestry.com
APPROVED: Craig A. Koehl 01-31-2013

CITY OF HOUSTON
DEPARTMENT OF PUBLIC WORKS AND ENGINEERING

WATER LINE REPLACEMENT
IN SPRING SHADOWS WEST AREA

TREE PROTECTION PLAN
SHEET 5 OF 20

WBS NUMBER
S-000035-0129-3

DRAWING SCALE
1"=40'

CITY OF HOUSTON PM
JOHN MSIGWA, P.E.

SHEET NO. 130 OF 155

50308

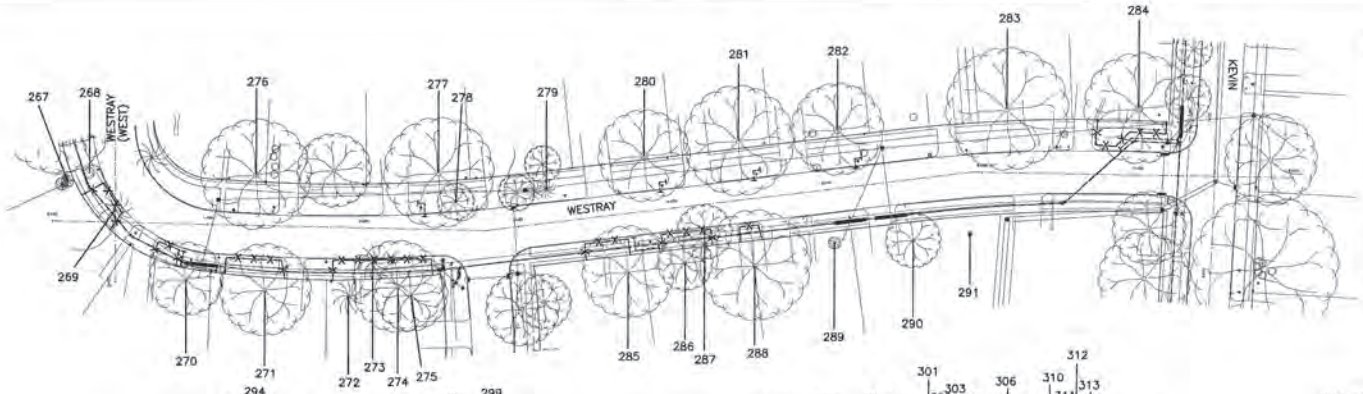

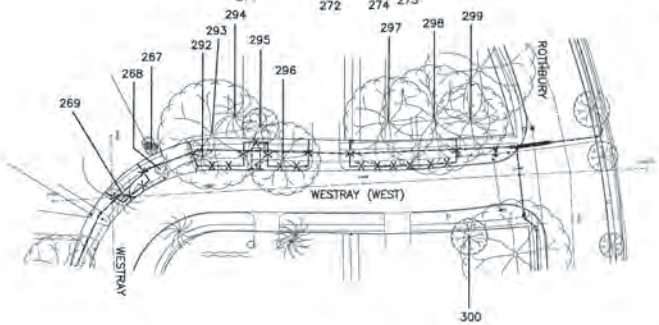

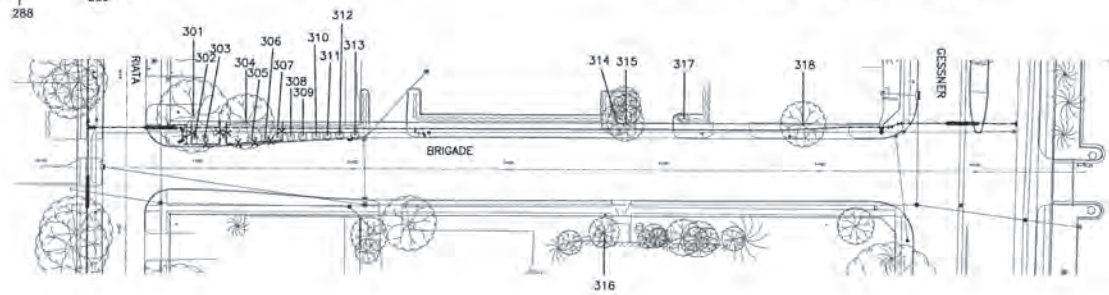

TREE PRESERVATION PLAN LEGEND

- TREE NUMBER/LOCATION
- TREE TO BE REMOVED
- TREE PROTECTION FENCE
- ROOT PRUNING TRENCH
- REPLACEMENT PLANTING SPECIES AND SIZE/TYPE

NOTE:
THIS TREE PROTECTION PLAN WAS DEVELOPED WITH INFORMATION PROVIDED BY DESIGN ENGINEER IN DRAWINGS DATED JANUARY 2013. THE PLAN CONSIDERS ALL FITTINGS, VERTICAL OFFSETS AND AREAS OF NECESSARY EXCAVATION. CHANGES MADE TO DESIGN MAY COMPROMISE THE TREE PROTECTION PLAN. REFER TO SPECIFICATIONS 01562 AND 02915. CONDITION OF EACH TREE IS BASED ON VISUAL EVALUATION AT TIME OF DESIGN. CONDITION AND STRUCTURAL INTEGRITY OF EACH TREE IS NOT GUARANTEED BY DESIGNER AT ANY POINT IN THE FUTURE, AS ENVIRONMENTAL AND MAINTENANCE INFLUENCES ON EACH TREE CAN NOT BE DETERMINED BY DESIGNER.

Tree No. Location	Description	Comments	Treatment
Trees on Westray			
267 10415 Westray	4" Water Oak	Private tree, will not be impacted	
268 10415 Westray	4" Crepe Myrtle	Not ordinance tree	
269 10415 Westray	18" Pine	Ordinance tree	Fence, Bore waterline
270 10411 Westray	20" Water Oak	Private tree	Root prune for tap & lead, Fence, Bore waterline
271 10407 Westray	30" Arizona Ash	Private tree	Fence, Bore waterline
272 10403 Westray	22" Pine	Private tree	Fence, Bore waterline
273 10403 Westray	17" Pine	Ordinance tree	Fence, Bore waterline
274 10403 Westray	16" Water Oak	Private tree	Fence, Bore waterline
275 10403 Westray	13" Water Oak	Private tree	Fence, Bore waterline
276 10410 Westray	26" Water Oak	Private tree, will not be impacted	
277 10402 Westray	38" Live Oak	Private tree	Root prune for lead
278 10402 Westray	5" Magnolia	Ordinance tree	Root prune for lead
279 10326 Westray	1' Sago	Not ordinance tree	
280 10322 Westray	25" Live Oak	Private tree	Root prune for lead
281 10318 Westray	32" Live Oak	Private tree	Root prune for lead
282 10314 Westray	25" Live Oak	Private tree	Root prune for lead
283 10306 Westray	35" Live Oak	Private tree, will not be impacted	
284 10302 Westray	38" Live Oak	Private tree	Root prune for waterline, Fence
285 10323 Westray	23" Water Oak	Private tree	Root prune for tap & lead, Fence, Bore waterline
286 10319 Westray	13" Magnolia	Private tree	Fence, Bore waterline
287 10319 Westray	13" Pecan	Ordinance tree	Fence, Bore waterline
288 10315 Westray	28" Water Oak	Private tree	Fence, Bore waterline
289 10315 Westray	4" Bur Oak	Private tree, will not be impacted	
290 10311 Westray	10" Magnolia	Private tree, will not be impacted	
291 10311 Westray	4" Bur Oak	Private tree, will not be impacted	
Trees on Westray (West)			
292 10423 Westray	15" Pine	Ordinance tree	Hand dig for bend, Fence, Bore waterline
293 10423 Westray	45" Water Oak	Private tree	Root prune for tap & lead, Fence, Bore waterline
294 10423 Westray	28" Pine	Private tree	Fence, Bore waterline
295 10423 Westray	6" Magnolia	Private tree	Fence, Bore waterline
296 10423 Westray	18" Sweetgum	Ordinance tree	Fence, Bore waterline
297 10427 Westray	30" Arizona Ash	Private tree	Fence, Bore waterline
298 10427 Westray	28" Water Oak	Private tree	Fence, Bore waterline
299 10427 Westray	16" Water Oak	Private tree, will not be impacted	
300 10411 Westray	14" Tallow	Private tree, will not be impacted	

Tree No. Location	Description	Comments	Treatment
Trees on Brigade			
301 2534 Riata	15" Live Oak	Private tree	Root prune for fire hydrant, Fence, Bore waterline
302 2534 Riata	1' Sago	Not ordinance tree	
303 2534 Riata	1' Sago	Not ordinance tree	
304 2534 Riata	24" Live Oak	Private tree	Fence, Bore waterline
305 2534 Riata	4" Crepe Myrtle	Not ordinance tree	
306 2534 Riata	5" Crepe Myrtle	Not ordinance tree	
307 2534 Riata	4" Crepe Myrtle	Not ordinance tree	
308 2534 Riata	6" Crepe Myrtle	Not ordinance tree	
309 2534 Riata	6" Crepe Myrtle	Not ordinance tree	
310 2534 Riata	5" Crepe Myrtle	Not ordinance tree	
311 2534 Riata	5" Crepe Myrtle	Not ordinance tree	
312 2534 Riata	6" Crepe Myrtle	Not ordinance tree	
313 2534 Riata	13" Crepe Myrtle	Not ordinance tree	
314 Not available	6" Loquat	Not ordinance tree	
315 Not available	12" Loquat	Not ordinance tree	
316 Not available	8" Magnolia	Private tree, will not be impacted	
317 Not available	9" Crepe Myrtle	Private tree, will not be impacted	
318 Not available	15" Catalpa	Not ordinance tree	

S&B INFRASTRUCTURE, LTD.

DESIGN ENGINEER NAME:
ADDRESS:
TELEPHONE: 713-845-5401
TX FIRM NUMBER: F-13582
SURVEYED BY: AMANI ENG. INC.
FB No. P-5648

C.N. Koehl
Urban Forestry, Inc.
210 Stone Bush Ct. • Katy, Texas 77493
281-391-0022 cl.koehl@koehlurbanforestry.com
APPROVED: Cindy N. Koehl 01-21-2013

CITY OF HOUSTON
DEPARTMENT OF PUBLIC WORKS AND ENGINEERING

WATER LINE REPLACEMENT
IN SPRING SHADOWS WEST AREA

TREE PROTECTION PLAN
SHEET 6 OF 20

WBS NUMBER
S-000035-0129-3

DRAWING SCALE
1"=40'

CITY OF HOUSTON PM
JOHN MSIGWA, P.E.

SHEET NO. 131 OF 155

50308

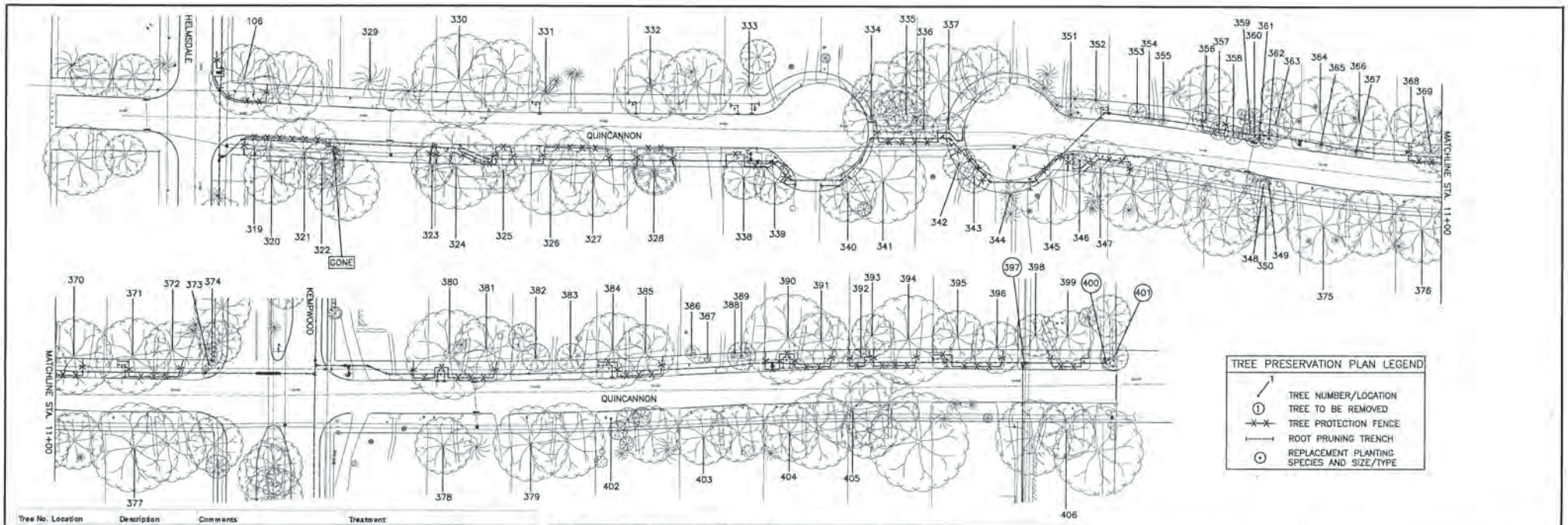

TREE PRESERVATION PLAN LEGEND

- TREE NUMBER/LOCATION
- TREE TO BE REMOVED
- TREE PROTECTION FENCE
- ROOT PRUNING TRENCH
- REPLACEMENT PLANTING SPECIES AND SIZE/TYPE

Tree No. Location	Description	Comments	Treatment
Trees on Quincannon			
319 2702 Quincannon	5" Water Oak	Ordinance tree	Fence, Bore waterline
320 2702 Quincannon	20" Shumard Oak	Private tree, will not be impacted	
321 2702 Quincannon	24" Live Oak	20% dieback, Ordinance tree	Fence, Bore waterline
322 2702 Quincannon	15" Live Oak	Private tree	Fence, Bore waterline
323 2706 Quincannon	13" Lacebark Elm	Private tree	Fence, Bore waterline
324 2710 Quincannon	25" Water Oak	Private tree	Root prune for bend, Fence, Bore waterline
325 2710 Quincannon	20" Water Oak	30% dieback, Private	Fence, Bore waterline
326 2714 Quincannon	25" Willow Oak	Private tree	Root prune for tap & lead, Fence, Bore waterline
327 2714 Quincannon	28" Willow Oak	Private tree	Fence, Bore waterline
328 2718 Quincannon	31" Water Oak	Private tree	Fence, Bore waterline
329 2707 Quincannon	24" Pine	Private tree, will not be impacted	
330 2711 Quincannon	27" Arizona Ash	Private tree, will not be impacted	
331 2715 Quincannon	25" Pine	Private tree	Root prune for lead
332 2719 Quincannon	30" Water Oak	Private tree	Root prune for lead
333 2723 Quincannon	20" Pine	Private tree	Root prune for lead
334 2727 Quincannon	22" Live Oak	Private tree	Fence, Bore waterline
335 2727 Quincannon	24" Live Oak	Private tree	Fence, Bore waterline
336 2731 Quincannon	4" Crepe Myrtle	Not ordinance tree	
337 2731 Quincannon	10" Water Oak	Ordinance tree	Root prune for waterline, Fence
338 2722 Quincannon	29" Water Oak	Private tree	Root prune for fire hydrant, Fence, Bore waterline
339 2722 Quincannon	22" Water Oak	Private tree	Root prune for bend, Fence, Bore waterline
340 2726 Quincannon	24" Water Oak	Private tree	Root prune for waterline
341 2726 Quincannon	30" Water Oak	Private tree, will not be impacted	
342 2730 Quincannon	12" Water Oak	Ordinance tree	Fence, Bore waterline
343 2730 Quincannon	12" Red Maple	Ordinance tree	Fence, Bore waterline
344 2730 Quincannon	10" Pine	Private tree	Fence, Bore waterline
345 2734 Quincannon	32" Arizona Ash	Private tree	Root prune for bend, Hand dig bend, Fence, Bore with pneumatic bullet
346 2734 Quincannon	6" Redbud	Not ordinance tree, remove for bends	Remove tree, no replacement required
347 2734 Quincannon	14" Water Oak	Ordinance tree	Root prune for waterline, Fence, Clearance prune
348 2742 Quincannon	12" Crepe Myrtle	Not ordinance tree	
349 2742 Quincannon	8" Crepe Myrtle	Not ordinance tree	
350 2742 Quincannon	20" Live Oak	Private tree, will not be impacted	
351 2735 Quincannon	2" Sago	Not ordinance tree	
352 2735 Quincannon	19" Pine	Ordinance tree	Root prune for lead
353 2739 Quincannon	4" Citrus	Not ordinance tree	
354 2739 Quincannon	2" Sago	Not ordinance tree	
355 2739 Quincannon	2" Sago	Not ordinance tree	
356 2743 Quincannon	10" Shumard Oak	Ordinance tree	Hand dig tap & lead, Fence, Bore waterline
357 2743 Quincannon	8" Cottonwood	Not ordinance tree	
358 2743 Quincannon	5" Redbud	Not ordinance tree	
359 2743 Quincannon	5" Redbud	Not ordinance tree	
360 2743 Quincannon	4" Yaupon	Not ordinance tree	
361 2743 Quincannon	2" Crepe Myrtle	Not ordinance tree	
362 2743 Quincannon	10" Cottonwood	Private tree, will not be impacted	
363 2743 Quincannon	4" Cottonwood	Not ordinance tree	

Tree No. Location	Description	Comments	Treatment
Trees on Quincannon			
364 2747 Quincannon	29" Willow Oak	Private tree, will not be impacted	
365 2747 Quincannon	2" Palm	Not ordinance tree	
366 2747 Quincannon	18" Willow Oak	Private tree, will not be impacted	
367 2747 Quincannon	2" Palm	Not ordinance tree	
368 2751 Quincannon	18" Willow Oak	Private tree, will not be impacted	
369 2751 Quincannon	14" Live Oak	Ordinance tree	Fence, Bore waterline
370 2751 Quincannon	24" Water Oak	Private tree	Fence, Bore waterline
371 2755 Quincannon	30" Willow Oak	Private tree	Root prune for tap & lead, Fence, Bore waterline
372 2755 Quincannon	16" Willow Oak	Private tree	Fence, Bore waterline
373 2755 Quincannon	1" Sago	Not ordinance tree	
374 2755 Quincannon	1" Arborvitae	Not ordinance tree	
375 2749 Quincannon	26" Willow Oak	Private tree, will not be impacted	
376 2750 Quincannon	22" Willow Oak	Private tree, will not be impacted	
377 2754 Quincannon	24" Willow Oak	Private tree, will not be impacted	
378 2806 Quincannon	24" Willow Oak	Private tree, will not be impacted	
379 2810 Quincannon	35" Willow Oak	Private tree, will not be impacted	
380 2807 Quincannon	40" Willow Oak	Private tree	Root prune for tap & lead, Fence, Bore waterline
381 2807 Quincannon	26" Water Oak	Private tree	Fence, Bore waterline
382 2811 Quincannon	10" Live Oak	Private tree, will not be impacted	
383 2811 Quincannon	4" Shumard Oak	Private tree, will not be impacted	
384 2815 Quincannon	22" Willow Oak	Private tree	Root prune for tap & lead, Fence, Bore waterline
385 2815 Quincannon	22" Willow Oak	Private tree	Fence, Bore waterline
386 2819 Quincannon	4" Crape Myrtle	Private tree, will not be impacted	
387 2819 Quincannon	4" Crape Myrtle	Not ordinance tree	
388 2819 Quincannon	5" Pear	Topped, Private tree	
389 2819 Quincannon	8" Pear	Not ordinance tree	
390 2823 Quincannon	28" Water Oak	Private tree	Root prune for tap & lead, Fence, Bore waterline
391 2823 Quincannon	20" Willow Oak	Private tree	Fence, Bore waterline
392 2827 Quincannon	5" Live Oak	Ordinance tree	Fence, Bore waterline
393 2827 Quincannon	20" Willow Oak	70% dieback, Private, will not be impacted	
394 2827 Quincannon	32" Willow Oak	Private tree	Fence, Bore waterline
395 2831 Quincannon	30" Willow Oak	Private tree	Root prune for tap & lead, Fence, Bore waterline
396 2831 Quincannon	26" Willow Oak	Private tree	Fence, Bore waterline
397 2835 Quincannon	5" Crape Myrtle	Not ordinance tree, remove for bends	Remove tree, no replacement required
398 2835 Quincannon	26" Willow Oak	Private tree, will not be impacted	
399 2835 Quincannon	28" Willow Oak	Private tree	Fence, Bore waterline
400 2835 Quincannon	7" Crape Myrtle	Not ordinance tree, remove for bends	Remove tree, no replacement required
401 2835 Quincannon	12" Tallow	Not ordinance tree, remove for bends	Remove tree, no replacement required
402 2814 Quincannon	3' Spanish Bayonet	Not ordinance tree	
403 2818 Quincannon	25" Willow Oak	Private tree, will not be impacted	
404 2822 Quincannon	26" Willow Oak	Private tree, will not be impacted	
405 2826 Quincannon	21" Live Oak	Ordinance tree	Hand dig lead
406 2834 Quincannon	22" Willow Oak	Private tree, will not be impacted	

NOTE:
THIS TREE PROTECTION PLAN WAS DEVELOPED WITH INFORMATION PROVIDED BY DESIGN ENGINEER IN DRAWINGS DATED JANUARY 2013. THE PLAN CONSIDERS ALL FITTINGS, VERTICAL OFFSETS AND AREAS OF NECESSARY EXCAVATION. CHANGES MADE TO DESIGN MAY COMPROMISE THE TREE PROTECTION PLAN. REFER TO SPECIFICATIONS 01562 AND 02915. CONDITION OF EACH TREE IS BASED ON VISUAL EVALUATION AT TIME OF DESIGN. CONDITION AND STRUCTURAL INTEGRITY OF EACH TREE IS NOT GUARANTEED BY DESIGNER AT ANY POINT IN THE FUTURE, AS ENVIRONMENTAL AND MAINTENANCE INFLUENCES ON EACH TREE CAN NOT BE DETERMINED BY DESIGNER.

S&B INFRASTRUCTURE, LTD.
Texas PE Firm Registration Number F-1582

DESIGN ENGINEER NAME:
ADDRESS:
TELEPHONE: 713-845-5401
TX FIRM NUMBER: F-1582

SURVEYED BY: AMANI ENG. INC.
FE No: F-5648

C.N. Koehl
Urban Forestry, Inc.
210 Stone Bush Ct. • Katy, Texas 77493
281-391-8022 cnkoehl@coehlurbanforestry.com
APPROVED: Craig A. Koehl 01-21-2013

CITY OF HOUSTON
DEPARTMENT OF PUBLIC WORKS AND ENGINEERING

WATER LINE REPLACEMENT
IN SPRING SHADOWS WEST AREA

TREE PROTECTION PLAN
SHEET 7 OF 20

WBS NUMBER
S-000035-0129-3

DRAWING SCALE
1"=40'

CITY OF HOUSTON PM
JOHN MSIGWA, P.E.

SHEET NO. 132 OF 155

50308
HOUSTON, TEXAS

DATE: Jan 25, 2013-3:30pm USERNAME: sa05 FILENAME: 129-38 Spring Shadows West 7P-7.dwg

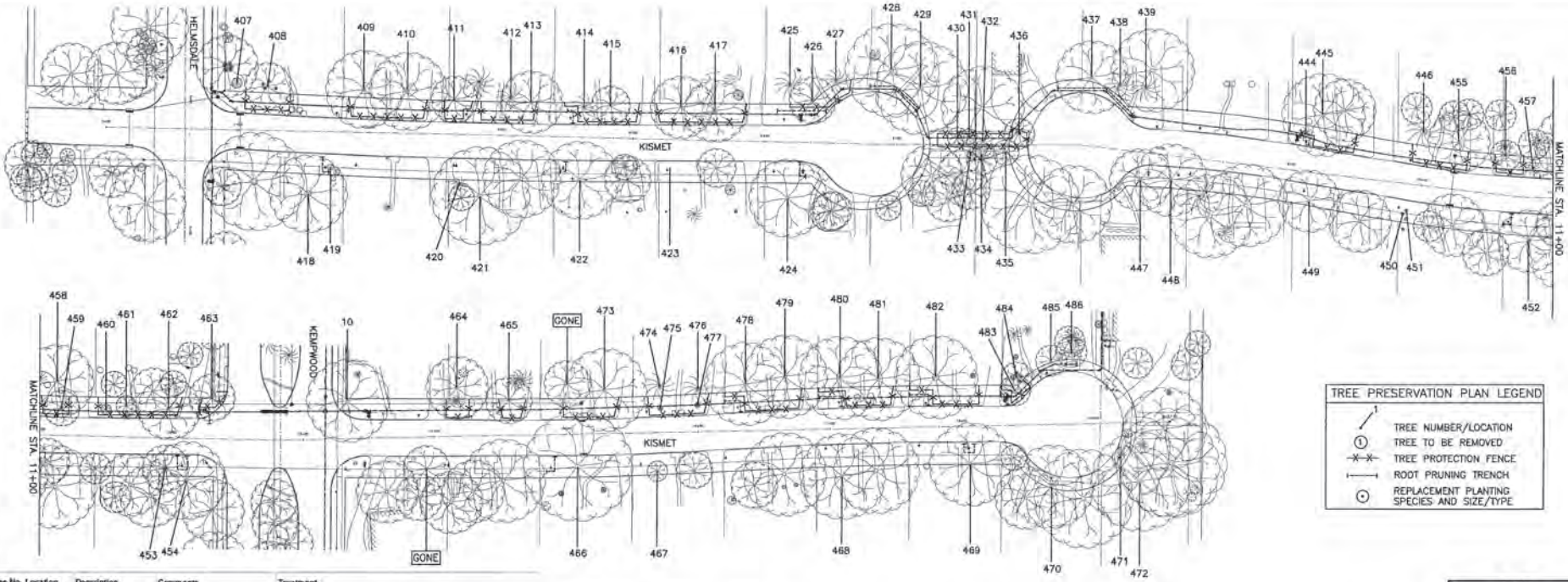

TREE PRESERVATION PLAN LEGEND

- TREE NUMBER/LOCATION
- TREE TO BE REMOVED
- TREE PROTECTION FENCE
- ROOT PRUNING TRENCH
- REPLACEMENT PLANTING SPECIES AND SIZE/TYPE

Tree No.	Location	Description	Comments	Treatment
Trees on Kismet				
407	2703 Kismet	4" Crepe Myrtle	Private tree, will not be impacted	
408	2703 Kismet	15" Willow Oak	Private tree	Fence, Bore waterline
409	2707 Kismet	28" Water Oak	Private tree	Fence, Bore waterline
410	2707 Kismet	24" Water Oak	Private tree	Fence, Bore waterline
411	2711 Kismet	18" Arizona Ash	Private tree	Fence, Bore waterline
412	2711 Kismet	22" Pine	Private tree	Fence, Bore waterline
413	2711 Kismet	20" Arizona Ash	Private tree	Fence, Bore waterline
414	2715 Kismet	24" Pine	Ordinance tree	Root prune for tap & lead, Fence, Bore waterline
415	2715 Kismet	16" Live Oak	Ordinance tree	Fence, Bore waterline
416	2719 Kismet	25" Live Oak	Ordinance tree	Hand dig tap & lead, Fence, Bore waterline
417	2719 Kismet	24" Water Oak	Ordinance tree	Fence, Bore waterline
418	2702 Kismet	28" Willow Oak	Private tree	Root prune for lead
419	2702 Kismet	5" Crepe Myrtle	Not ordinance tree	
420	2710 Kismet	1" Sago	Private tree, will not be impacted	
421	2710 Kismet	30" Willow Oak	Private tree, will not be impacted	
422	2714 Kismet	25" Willow Oak	Ordinance tree	Root prune for lead
423	2718 Kismet	2" Crepe Myrtle	Not ordinance tree	
424	2722 Kismet	38" Water Oak	Private tree	Root prune for fire hydrant salvage
425	2723 Kismet	22" Pine	Private tree	Root prune for waterline
426	2723 Kismet	20" Tallow	Private tree	Root prune for waterline
427	2723 Kismet	19" Pine	Private tree	Fence, Hand dig for bend, Bore with pneumatic bullet
428	2327 Kismet	31" Willow Oak	Private tree	Root prune for waterline
429	2327 Kismet	22" Willow Oak	Private tree	Root prune for waterline
430	2327 Kismet	4" Savannah Holly	Private tree	Fence, Bore waterline
431	2327 Kismet	5" Savannah Holly	Private tree	Fence, Bore waterline
432	2327 Kismet	12" Pine	Private tree	Fence, Bore waterline
433	2730 Kismet	10" Pine	Private tree	Fence, Bore waterline
434	2730 Kismet	15" Pine	Private tree	Fence, Bore waterline
435	2730 Kismet	7" Savannah Holly	Private tree	Fence, Bore waterline
436	2731 Kismet	8" Southern Red Oak	Ordinance tree	Hand dig for bend, Fence, Bore waterline
437	2735 Kismet	24" Southern Red Oak	Private tree	Root prune for waterline
438	2735 Kismet	18" Pine	Private tree	Root prune for waterline
439	2735 Kismet	20" Pine	Private tree	Root prune for waterline
440	Not used			
441	Not used			
442	Not used			
443	Not used			
444	2743 Kismet	2" Juniper	Not ordinance tree	
445	2743 Kismet	26" Live Oak	Private tree	Root prune for tap & lead, Fence, Bore waterline
446	2747 Kismet	28" Pine	Private tree	Fence, Bore waterline
447	2734 Kismet	22" Water Oak	Ordinance tree	Remove fire hydrant bonnet, cut stem and bend 6" below grade. Remove valve box and backfill. Do not excavate to remove entire fire hydrant. Do not cut roots greater than 1" in diameter
448	2734 Kismet	18" Water Oak	Ordinance tree	Hand dig lead
449	2742 Kismet	21" Live Oak	Ordinance tree	Hand dig lead

Tree No.	Location	Description	Comments	Treatment
Trees on Kismet				
450	2746 Kismet	2" Crepe Myrtle	Not ordinance tree	
451	2746 Kismet	3" Crepe Myrtle	Not ordinance tree	
452	2750 Kismet	36" Willow Oak	Private tree	Root prune for lead
453	2754 Kismet	13" Water Oak	Ordinance tree	Root prune for lead
454	2754 Kismet	28" Live Oak	Private tree	Root prune for lead
455	2747 Kismet	30" Live Oak	Private tree	Fence, Bore waterline
456	2751 Kismet	14" Magnolia	Ordinance tree	Hand dig tap & lead, Fence, Bore waterline
457	2751 Kismet	3" Sago	Not ordinance tree	
458	2751 Kismet	26" Water Oak	Private tree	Fence, Bore waterline
459	2751 Kismet	10" Magnolia	Ordinance tree	Fence, Bore waterline
460	2755 Kismet	2" Magnolia	Ordinance tree	Fence, Bore waterline
461	2755 Kismet	8" Magnolia	Ordinance tree	Fence, Bore waterline
462	2755 Kismet	24" Live Oak	Ordinance tree	Fence, Bore waterline
463	2755 Kismet	12" Live Oak	Private tree	Root prune for waterline, Fence
464	2807 Kismet	28" Live Oak	Private tree	Fence, Bore waterline
465	2807 Kismet	12" Magnolia	Ordinance tree	Fence, Bore waterline
466	2810 Kismet	35" Live Oak	Ordinance tree	Root prune for lead
467	2814 Kismet	4" Water Oak	Ordinance tree	Keep excavation for lead at least 5' from trunk
468	2822 Kismet	24" Willow Oak	Private tree, will not be impacted	
469	2826 Kismet	25" Willow Oak	Private tree	Root prune for lead
470	2830 Kismet	24" Water Oak	Ordinance tree	Hand dig lead
471	2834 Kismet	2" Crepe Myrtle	Not ordinance tree	
472	2834 Kismet	32" Water Oak	Private tree, will not be impacted	
473	2811 Kismet	33" Willow Oak	Private tree	Fence, Bore waterline
474	2813 Kismet	26" Pine	Private tree	Fence, Bore waterline
475	2815 Kismet	2" Baldcypress	Ordinance tree	Fence, Bore waterline
476	2815 Kismet	28" Pine	Private tree	Fence, Bore waterline
477	2815 Kismet	7" Crape Myrtle	Not ordinance tree	
478	2819 Kismet	35" Willow Oak	Private tree	Root prune for tap & lead, Fence, Bore waterline
479	2819 Kismet	15" Willow Oak	Private tree	Fence, Bore waterline
480	2823 Kismet	24" Water Oak	Private tree	Root prune for tap & lead, Fence, Bore waterline
481	2823 Kismet	28" Willow Oak	Private tree	Fence, Bore waterline
482	2827 Kismet	28" Willow Oak	Private tree	Root prune for tap & lead, Fence, Bore waterline
483	2831 Kismet	10" Live Oak	Ordinance tree	Root prune for fire hydrant, Fence, Bore waterline
484	2831 Kismet	11" Tallow	Private tree, will not be impacted	
485	2831 Kismet	7" Live Oak	Private tree	Root prune for waterline
486	2831 Kismet	8" Live Oak	Private tree	Root prune for waterline

NOTE:
THIS TREE PROTECTION PLAN WAS DEVELOPED WITH INFORMATION PROVIDED BY DESIGN ENGINEER IN DRAWINGS DATED JANUARY 2013. THE PLAN CONSIDERS ALL FITTINGS, VERTICAL OFFSETS AND AREAS OF NECESSARY EXCAVATION. CHANGES MADE TO DESIGN MAY COMPROMISE THE TREE PROTECTION PLAN. REFER TO SPECIFICATIONS 01562 AND 02915. CONDITION OF EACH TREE IS BASED ON VISUAL EVALUATION AT TIME OF DESIGN. CONDITION AND STRUCTURAL INTEGRITY OF EACH TREE IS NOT GUARANTEED BY DESIGNER AT ANY POINT IN THE FUTURE, AS ENVIRONMENTAL AND MAINTENANCE INFLUENCES ON EACH TREE CAN NOT BE DETERMINED BY DESIGNER.

S&B INFRASTRUCTURE, LTD.
Texas PE Firm Registration Number F-1582

DESIGN ENGINEER NAME:
ADDRESS:
TELEPHONE: 713-845-5401
TX FIRM NUMBER: F-1582
SURVEYED BY: AMANI ENG. INC.
FB No. P-5648

C.N. Koehl
Urban Forestry, Inc
210 Stone Bush Ct. • Katy, Texas 77493
281-391-0022 cknoehl@koehlurbanforestry.com
APPROVED: Craig N Koehl 01-21-2015

CITY OF HOUSTON
DEPARTMENT OF PUBLIC WORKS AND ENGINEERING

WATER LINE REPLACEMENT
IN SPRING SHADOWS WEST AREA

TREE PROTECTION PLAN
SHEET 8 OF 20

WBS NUMBER
S-000035-0129-3

DRAWING SCALE
1"=40'

CITY OF HOUSTON PM
CHIOMA MSIGWA, P.E.

SHEET NO. 133 OF 155

50308

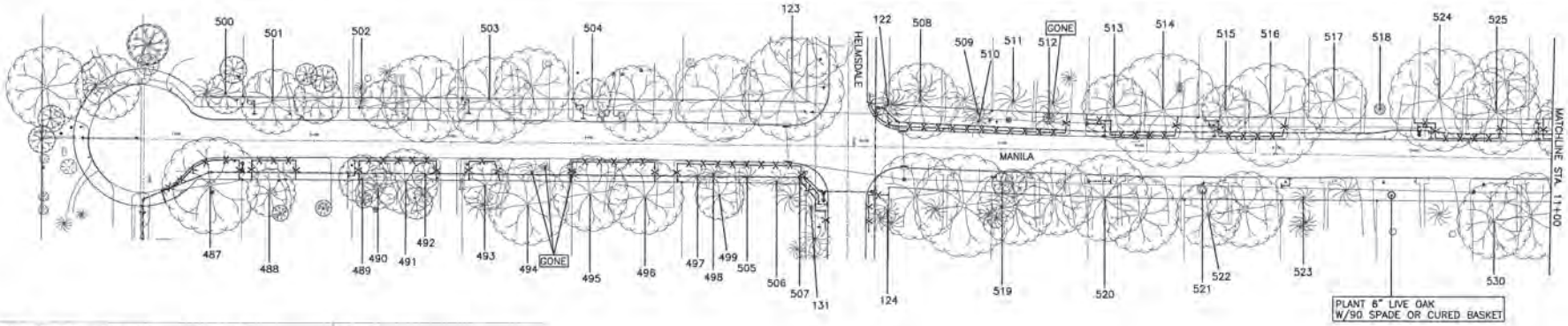

Tree No.	Location	Description	Comments	Treatment
Trees on Manila				
487	2606 Manila	26" Arizona Ash	Private tree	Hand dig for bend, Fence, Bore waterline
488	2610 Manila	18" Live Oak	Private tree	Fence, Bore waterline
489	2614 Manila	15" Water Oak	Ordinance tree	Root prune for tap & lead, Fence, Bore waterline
490	2614 Manila	17" Live Oak	Private tree	Fence, Bore waterline
491	2614 Manila	25" Live Oak	Private tree	Fence, Bore waterline
492	2614 Manila	8" Magnolia	Ordinance tree	Fence, Bore waterline
493	2618 Manila	16" Water Oak	Private tree	Fence, Bore waterline
494	2618 Manila	28" Water Oak	Private tree, will not be impacted	
495	2622 Manila	26" Shumard Oak	Private tree	Fence, Bore waterline
496	2622 Manila	28" Water Oak	Private tree	Fence, Bore waterline
497	2630 Manila	18" Pine	Ordinance tree	Fence, Bore waterline
498	2630 Manila	18" Overcup Oak	Ordinance tree	Fence, Bore waterline
499	2630 Manila	20" Pine	Private tree	Fence, Bore waterline
500	2607 Manila	12" Water Oak	Private tree, will not be impacted	
501	2611 Manila	22" Live Oak	Ordinance tree	Root prune for lead
502	2615 Manila	10" Pine	Ordinance tree	Hand dig lead
503	2619 Manila	20" Live Oak	Ordinance tree	Root prune for lead
504	2623 Manila	14" Water Oak	Private tree	Root prune for lead
505	2630 Manila	10" Pine	Ordinance tree	Fence, Bore waterline
506	2630 Manila	7" Pine	Ordinance tree	Fence, Bore waterline
507	2630 Manila	12" Pine	Ordinance tree	Root prune for bends, Fence, Bore waterline
508	2703 Manila	18" Water Oak	Private tree	Fence, Bore waterline
509	2703 Manila	22" Pine	Ordinance tree	Fence, Bore waterline
510	2703 Manila	10" Pine	Ordinance tree	Hand dig tap & lead, Fence, Bore waterline
511	2707 Manila	27" Pine	Private tree	Fence, Bore waterline
512	2707 Manila	2" Water Oak	Ordinance tree	Fence, Bore waterline
513	2711 Manila	34" Willow Oak	Private tree	Root prune for tap & lead, Fence, Bore waterline
514	2711 Manila	36" Willow Oak	Private tree	Fence, Bore waterline
515	2715 Manila	18" Willow Oak	Private tree	Root prune for tap & lead, Fence, Bore waterline
516	2715 Manila	30" Willow Oak	Private tree	Fence, Bore waterline
517	2719 Manila	28" Southern Red Oak	Private tree, will not be impacted	
518	2719 Manila	2" Magnolia	Private tree, will not be impacted	
519	2706 Manila	4" Magnolia	Ordinance tree	Keep excavation for lead at least 5' from trunk
520	2710 Manila	28" Willow Oak	Private tree	Root prune for lead
521	2714 Manila	1" Mexican Sage	Not ordinance tree	
522	2714 Manila	24" Willow Oak	Private tree, will not be impacted	
523	2718 Manila	18" Pine	Ordinance tree	Root prune for lead
524	2723 Manila	29" Willow Oak	Private tree	Root prune for tap & lead, Fence, Bore waterline
525	2723 Manila	35" Willow Oak	Private tree	Fence, Bore waterline
530	2726 Manila	28" Live Oak	Private tree, will not be impacted	

TREE PRESERVATION PLAN LEGEND

- TREE NUMBER/LOCATION
- TREE TO BE REMOVED
- TREE PROTECTION FENCE
- ROOT PRUNING TRENCH
- REPLACEMENT PLANTING SPECIES AND SIZE/TYPE

NOTE:
THIS TREE PROTECTION PLAN WAS DEVELOPED WITH INFORMATION PROVIDED BY DESIGN ENGINEER IN DRAWINGS DATED JANUARY 2013. THE PLAN CONSIDERS ALL FITTINGS, VERTICAL OFFSETS AND AREAS OF NECESSARY EXCAVATION. CHANGES MADE TO DESIGN MAY COMPROMISE THE TREE PROTECTION PLAN. REFER TO SPECIFICATIONS 01562 AND 02915. CONDITION OF EACH TREE IS BASED ON VISUAL EVALUATION AT TIME OF DESIGN. CONDITION AND STRUCTURAL INTEGRITY OF EACH TREE IS NOT GUARANTEED BY DESIGNER AT ANY POINT IN THE FUTURE, AS ENVIRONMENTAL AND MAINTENANCE INFLUENCES ON EACH TREE CAN NOT BE DETERMINED BY DESIGNER.

S&B INFRASTRUCTURE, LTD.

DESIGN ENGINEER NAME:
ADDRESS:
TELEPHONE: 713-845-5401
TX FIRM NUMBER: F-1582
SURVEYED BY: AMANI ENG. INC.
FB No. P-5648

C.N. Koehl
Urban Forestry, Inc.
210 Stone Bush Ct. - Katy, Texas 77493
281-391-0022 ckoehl@koehlurbanforestry.com

APPROVED: C.N. Koehl 01-21-2013

CITY OF HOUSTON
DEPARTMENT OF PUBLIC WORKS AND ENGINEERING

WATER LINE REPLACEMENT
IN SPRING SHADOWS WEST AREA

TREE PROTECTION PLAN
SHEET 9 OF 20

WBS NUMBER
S-000035-0129-3

DRAWING SCALE
1"=40'

CITY OF HOUSTON PM
JOHN MSIGWA, P.E.

SHEET NO. 134 OF 155

50308

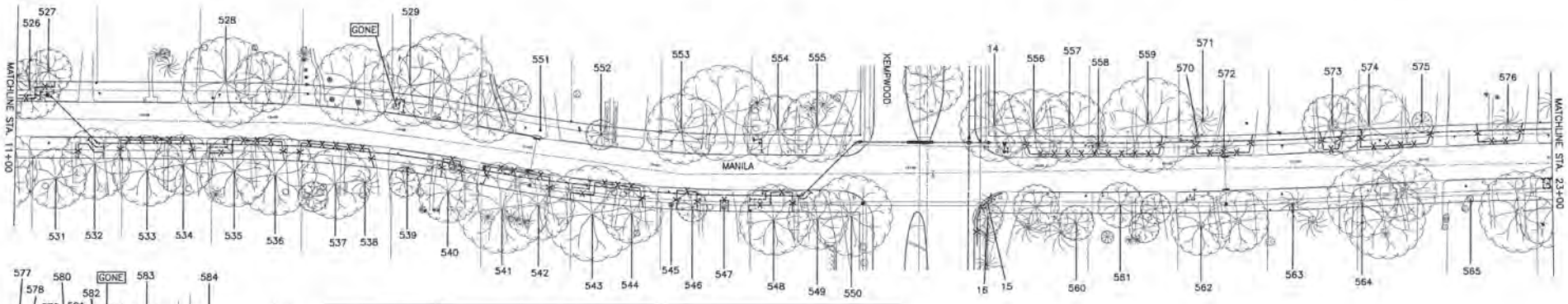

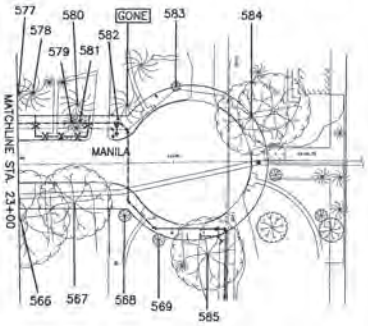

Tree No.	Location	Description	Comments	Treatment
Trees on Manila				
526	2727 Manila	22" Live Oak	Ordinance tree	Root prune for tap & lead, Fence, Bore waterline
527	2727 Manila	13" Water Oak	Private tree	Root prune for waterline
528	2735 Manila	40" Willow Oak	Private tree	Remove fire hydrant bonnet, cut stem and barrel 6" below grade. Remove valve box and backfill. Do not excavate to remove entire fire hydrant. Do not cut roots greater than 1" in diameter. Hand dig lead
529	2743 Manila	25" Water Oak	Private tree	Root prune for lead
530	2726 Manila	28" Live Oak	Private tree, will not be impacted	
531	2730 Manila	24" Willow Oak	Private tree, will not be impacted	
532	2730 Manila	18" Willow Oak	Private tree	Root prune for waterline, Fence
533	2734 Manila	33" Willow Oak	Private tree	Fence, Bore waterline
534	2734 Manila	26" Water Oak	Private tree	Fence, Bore waterline
535	2738 Manila	32" Willow Oak	Private tree	Root prune for tap & lead, Fence, Bore waterline
536	2738 Manila	26" Willow Oak	Private tree	Fence, Bore waterline
537	2742 Manila	27" Shumard Oak	Private tree	Fence, Bore waterline
538	2742 Manila	27" Pine	Private tree	Fence, Bore waterline
539	2746 Manila	1" Sago	Not ordinance tree	
540	2746 Manila	25" Willow Oak	Private tree	Fence, Bore waterline
541	2750 Manila	40" Willow Oak	Private tree	Fence, Bore waterline
542	2750 Manila	38" Willow Oak	Private tree	Fence, Bore waterline
543	2754 Manila	38" Willow Oak	30% dieback, Private	Root prune for tap & lead, Fence, Bore waterline
544	2754 Manila	26" Willow Oak	Private tree	Fence, Bore waterline
545	2758 Manila	4" Pear	Not ordinance tree	
546	2758 Manila	16" Live Oak	Ordinance tree	Fence, Bore waterline
547	2758 Manila	2" Live Oak	Ordinance tree	Fence
548	2762 Manila	34" Willow Oak	Private tree	Root prune for tap & lead, Fence, Bore waterline
549	2762 Manila	29" Willow Oak	Private tree	Root prune for waterline
550	2762 Manila	20" Live Oak	Private tree, will not be impacted	
551	2747 Manila	22" Live Oak	Ordinance tree	Root prune for lead
552	2751 Manila	8" Riverbirch	40% dieback, Not ordinance tree	
553	2755 Manila	34" Willow Oak	Private tree	Hand dig lead
554	2759 Manila	21" Willow Oak	Private tree	Root prune for lead
555	2759 Manila	26" Willow Oak	Private tree, will not be impacted	
556	2803 Manila	25" Willow Oak	Private tree	Fence, Bore waterline
557	2803 Manila	20" Willow Oak	30% dieback, Private	Fence, Bore waterline
558	2807 Manila	6" Pine	Ordinance tree	Fence, Bore waterline
559	2807 Manila	38" Willow Oak	Private tree	Fence, Bore waterline
560	2802 Manila	12" Magnolia	Private tree, will not be impacted	
561	2806 Manila	16" Live Oak	Ordinance tree	Keep excavation for lead at least 15' from trunk
562	2810 Manila	28" Willow Oak	Private tree	Root prune for lead
563	2814 Manila	28" Pine	Ordinance tree	Hand dig lead
564	2818 Manila	25" Water Oak	Ordinance tree	Hand dig lead
565	2822 Manila	2" Crape Myrtle	Not ordinance tree	
566	2826 Manila	35" Willow Oak	Private tree	Root prune for lead
567	2826 Manila	31" Willow Oak	Ordinance tree, will not be impacted	
568	2826 Manila	3" Red Maple	Private tree, will not be impacted	
569	2826 Manila	3" Live Oak	Private tree, will not be impacted	
570	2811 Manila	2" Sago	Not ordinance tree	
571	2811 Manila	24" Pine	Private tree	Root prune for tap & lead, Fence, Bore waterline
572	2811 Manila	18" Pine	Ordinance tree	Fence, Bore waterline
573	2815 Manila	18" Live Oak	Private tree	Fence, Bore waterline
574	2819 Manila	28" Willow Oak	Private tree	Hand dig tap & lead, Fence, Bore waterline
575	2819 Manila	5" Live Oak	Private tree, will not be impacted	
576	2823 Manila	24" Pine	Private tree	Fence, Bore waterline
577	2827 Manila	26" Pine	Private tree, will not be impacted	
578	2827 Manila	28" Pine	Private tree, will not be impacted	
579	2827 Manila	14" Pine	Ordinance tree	Fence, Bore waterline
580	2827 Manila	14" Pine	Private tree	Root prune for waterline
581	2827 Manila	12" Pine	Ordinance tree	Fence, Bore waterline
582	2831 Manila	1" Pear	Not ordinance tree	
583	2831 Manila	3" Live Oak	Private tree, will not be impacted	
584	2835 Manila	16" Water Oak	Ordinance tree	Root prune for lead
585	2830 Manila	18" Water Oak	Private tree	Root prune for waterline

TREE PRESERVATION PLAN LEGEND

- TREE NUMBER/LOCATION
- TREE TO BE REMOVED
- TREE PROTECTION FENCE
- ROOT PRUNING TRENCH
- REPLACEMENT PLANTING SPECIES AND SIZE/TYPE

NOTE:
THIS TREE PROTECTION PLAN WAS DEVELOPED WITH INFORMATION PROVIDED BY DESIGN ENGINEER IN DRAWINGS DATED JANUARY 2013. THE PLAN CONSIDERS ALL FITTINGS, VERTICAL OFFSETS AND AREAS OF NECESSARY EXCAVATION. CHANGES MADE TO DESIGN MAY COMPROMISE THE TREE PROTECTION PLAN. REFER TO SPECIFICATIONS 01562 AND 02915. CONDITION OF EACH TREE IS BASED ON VISUAL EVALUATION AT TIME OF DESIGN. CONDITION AND STRUCTURAL INTEGRITY OF EACH TREE IS NOT GUARANTEED BY DESIGNER AT ANY POINT IN THE FUTURE, AS ENVIRONMENTAL AND MAINTENANCE INFLUENCES ON EACH TREE CAN NOT BE DETERMINED BY DESIGNER.

S&B INFRASTRUCTURE, LTD.
Texas PE Firm Registration Number: F-1582

DESIGN ENGINEER NAME:
ADDRESS:
TELEPHONE: 713-845-5401
TX FIRM NUMBER: F-1582
SURVEYED BY: AMANI ENG. INC.
FB No. F-5648

C.N. Koehl
Urban Forestry, Inc.
210 Stone Bush Ct. • Katy, Texas 77493
281-391-8622 cnkoehl@koehlurbanforestry.com
APPROVED: Craig A. Koehl 01-21-2013

CITY OF HOUSTON
DEPARTMENT OF PUBLIC WORKS AND ENGINEERING

WATER LINE REPLACEMENT
IN SPRING SHADOWS WEST AREA

TREE PROTECTION PLAN
SHEET 10 OF 20

WBS NUMBER
S-000035-0129-3

DRAWING SCALE
1"=40'

CITY OF HOUSTON PM
JOHN MSIGWA, P.E.

SHEET NO. 135 OF 155

50908
HOUSTON, TEXAS

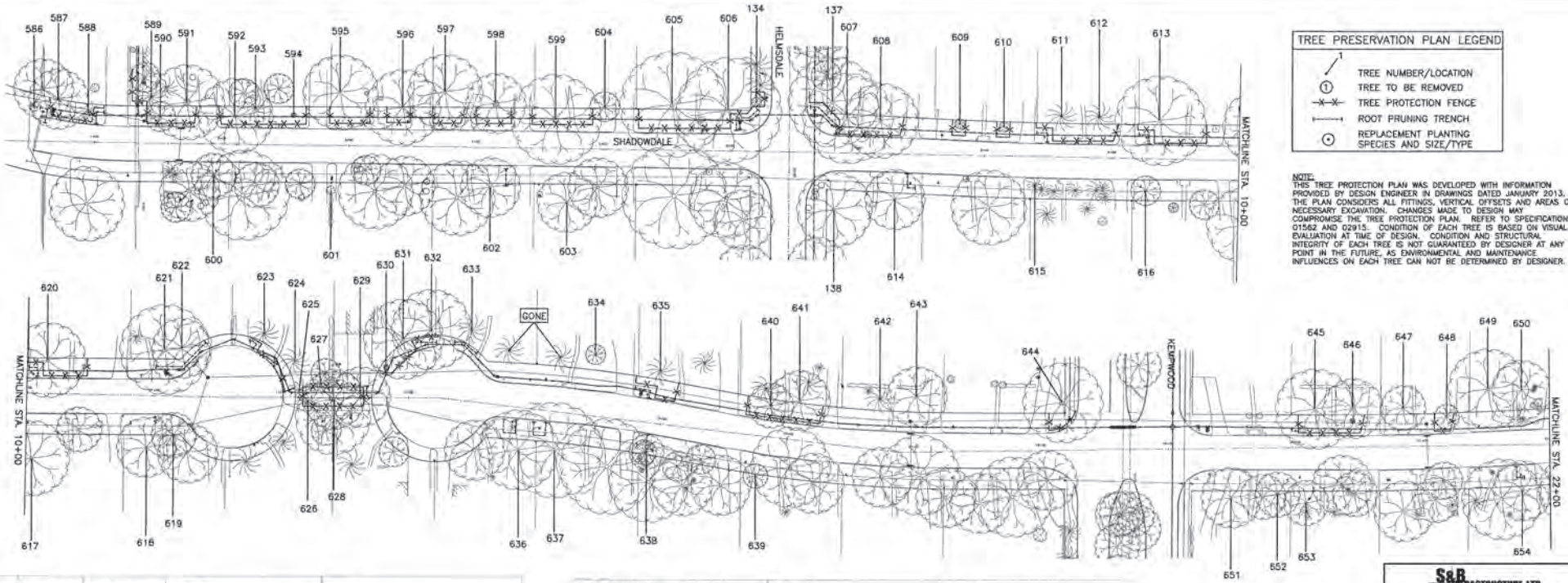

TREE PRESERVATION PLAN LEGEND

- TREE NUMBER/LOCATION
- TREE TO BE REMOVED
- TREE PROTECTION FENCE
- ROOT PRUNING TRENCH
- REPLACEMENT PLANTING SPECIES AND SIZE/TYPE

NOTE:
THIS TREE PROTECTION PLAN WAS DEVELOPED WITH INFORMATION PROVIDED BY DESIGN ENGINEER IN DRAWINGS DATED JANUARY 2013. THE PLAN CONSIDERS ALL FITTINGS, VERTICAL OFFSETS AND AREAS OF NECESSARY EXCAVATION. CHANGES MADE TO DESIGN MAY COMPROMISE THE TREE PROTECTION PLAN. REFER TO SPECIFICATIONS 01562 AND 02915. CONDITION OF EACH TREE IS BASED ON VISUAL EVALUATION AT TIME OF DESIGN. CONDITION AND STRUCTURAL INTEGRITY OF EACH TREE IS NOT GUARANTEED BY DESIGNER AT ANY POINT IN THE FUTURE, AS ENVIRONMENTAL AND MAINTENANCE INFLUENCES ON EACH TREE CAN NOT BE DETERMINED BY DESIGNER.

Tree No. Location	Description	Comments	Treatment
Trees on Shadowdale			
586 2603 Shadowdale	3" American Elm	Not ordinance tree	
587 2603 Shadowdale	24" Water Oak	Private tree	Root prune for lead, Fence
588 2603 Shadowdale	18" Pine	Ordinance tree	Root prune for fire hydrant, Fence, Hand dig lead
589 2607 Shadowdale	20" Pine	Private tree	Fence, Bore waterline
590 2607 Shadowdale	1" Shumard Oak	Ordinance tree	Fence, Bore waterline
591 2607 Shadowdale	28" American Elm	Private tree	Fence, Bore waterline
592 2611 Shadowdale	26" Live Oak	Ordinance tree	Hand dig tap & lead, Fence, Bore waterline
593 2611 Shadowdale	18" Pine	Ordinance tree	Fence, Bore waterline
594 2611 Shadowdale	2" Live Oak	Ordinance tree	Fence, Bore waterline
595 2615 Shadowdale	30" Water oak	Private tree	Fence, Bore waterline
596 2615 Shadowdale	20" Shumard Oak	Ordinance tree	Hand dig tap & lead, Fence, Bore waterline
597 2619 Shadowdale	24" Water Oak	Private tree	Fence, Bore waterline
598 2619 Shadowdale	15" Live Oak	Private tree	Fence, Bore waterline
599 2623 Shadowdale	25" Live Oak	Ordinance tree	Fence, Bore waterline
600 2606 Shadowdale	16" Water Oak	Ordinance tree	Hand dig lead
601 2610 Shadowdale	8" Crape Myrtle	Private tree, will not be impacted	
602 2619 Shadowdale	27" Water Oak	Private tree	Root prune for lead
603 2622 Shadowdale	25" Live Oak	Private tree, will not be impacted	
604 2623 Shadowdale	10" Huisache	Private tree, will not be impacted	
605 2631 Shadowdale	34" Willow Oak	Private tree	Fence, Bore waterline
606 2631 Shadowdale	25" Willow Oak	Ordinance tree	Root prune for fire hydrant, Fence, Bore waterline
607 2700 Shadowdale	35" Live Oak	Ordinance tree	Root prune for bends, Fence, Bore waterline
608 2703 Shadowdale	22" Live Oak	Ordinance tree	Fence, Bore waterline
609 2707 Shadowdale	5" Live Oak	Ordinance tree	Fence, Bore waterline
610 2707 Shadowdale	5" Live Oak	Ordinance tree	Fence, Bore waterline
611 2707 Shadowdale	21" Pine	Private tree	Root prune for tap & lead, Fence, Bore waterline
612 2711 Shadowdale	25" Pine	Private tree	Fence, Bore waterline
613 2715 Shadowdale	40" Willow Oak	Private tree	Root prune for tap & lead, Fence, Bore waterline
614 2702 Shadowdale	24" Willow Oak	Private tree	Root pune for lead
615 2710 Shadowdale	10" Pine	Ordinance tree	Hand dig lead
616 2714 Shadowdale	12" Pecan	Ordinance tree	Hand dig lead
617 2718 Shadowdale	30" Live Oak	Private tree, will not be impacted	
618 2722 Shadowdale	24" Willow Oak	Private tree, will not be impacted	
619 2722 Shadowdale	12" Willow Oak	Private tree, will not be impacted	
620 2719 Shadowdale	20" Water Oak	Ordinance tree	Root prune for tap & lead, Fence, Bore waterline
621 2723 Shadowdale	25" Arizona Ash	Private tree	Root prune for waterline
622 2723 Shadowdale	15" Red Maple	Private tree	Root prune for waterline
623 2727 Shadowdale	24" Pine	Private tree	Root prune for bends, Fence, Bore waterline
624 2727 Shadowdale	20" Pine	Private tree	Hand dig bends, Fence, Bore waterline with pneumatic bulkhead

Tree No. Location	Description	Comments	Treatment
Trees on Shadowdale			
625 2727 Shadowdale	14" Pine	Easement tree. Cavity at base, Remove for bend	Remove tree, no replacement required.
626 2726 Shadowdale	16" Pine	Easement tree	Fence, Bore waterline
627 2727 Shadowdale	16" Pine	Easement tree	Fence, Bore waterline
628 2730 Shadowdale	22" Live Oak	Easement tree	Fence, Bore waterline
629 2731 Shadowdale	12" Water Oak	Easement tree	Root prune for bend, Fence, Bore waterline
630 2731 Shadowdale	2" Cherry laurel	Not ordinance tree	
631 2731 Shadowdale	30" Live Oak	Private tree	Fence, Bore waterline
632 2731 Shadowdale	26" Water Oak	Private tree	Root prune for waterline
633 2735 Shadowdale	26" Pine	Private tree	Root prune for waterline
634 2739 Shadowdale	4" Magnolia	Private tree, will not be impacted	
635 Not available	25" Pine	Private tree	Root prune for tap & lead, Fence, Bore waterline
636 2734 Shadowdale	25" Live Oak	Private tree	Root prune for lead
637 Not available	31" Willow Oak	Private tree	Root prune for lead
638 2738 Shadowdale	6" Live Oak	Ordinance tree	Root prune for lead
639 2742 Shadowdale	24" Live Oak	Private tree	Root prune for lead
640 2747 Shadowdale	22" Live Oak	Ordinance tree	Fence, Bore waterline
641 2747 Shadowdale	20" Live Oak	Private tree	Fence, Bore waterline
642 2747 Shadowdale	24" Pine	Private tree, will not be impacted	
643 2751 Shadowdale	21" Willow Oak	Private tree, will not be impacted	
644 2755 Shadowdale	25" Live Oak	Private tree	Fence, Bore waterline
645 2807 Shadowdale	20" Willow Oak	Private tree	Fence, Bore waterline
646 2807 Shadowdale	20" Willow Oak	Private tree	Fence, Bore waterline
647 2811 Shadowdale	13" Mulberry	Private tree, will not be impacted	
648 2811 Shadowdale	5" Water Oak	Ordinance tree	Fence, Bore waterline
649 2815 Shadowdale	30" Willow Oak	Private tree, will not be impacted	
650 2815 Shadowdale	25" Willow Oak	Private tree, will not be impacted	
651 2802 Shadowdale	15" Arizona Ash	Private tree, will not be impacted	
652 2802 Shadowdale	12" Arizona Ash	Private tree, will not be impacted	
653 2806 Shadowdale	14" Arizona Ash	Private tree, will not be impacted	
654 2814 Shadowdale	21" Water Oak	Private tree	Root prune for lead

S&B INFRASTRUCTURE, LTD.
Texas PE Firm Registration Number: F-1582

DESIGN ENGINEER NAME:
ADDRESS:
TELEPHONE: 713-845-5401
TX FIRM NUMBER: F-1582
SURVEYED BY: AMAMI ENG. INC.
FB No. P-5648

C.N. Koehl
Urban Forestry, Inc.
210 Stone Bush Ct. • Katy, Texas 77493
281-391-0822 ckoehl@koehlurbanforestry.com
APPROVED: Craig A Koehl 01-23-2015

CITY OF HOUSTON
DEPARTMENT OF PUBLIC WORKS AND ENGINEERING

WATER LINE REPLACEMENT
IN SPRING SHADOWS WEST AREA

TREE PROTECTION PLAN
SHEET 11 OF 20

WBS NUMBER
S-000035-0129-3

DRAWING SCALE
1"=40'

CITY OF HOUSTON PM
O.JOHN MSIGWA, P.E.

SHEET NO. 136 OF 155

50308

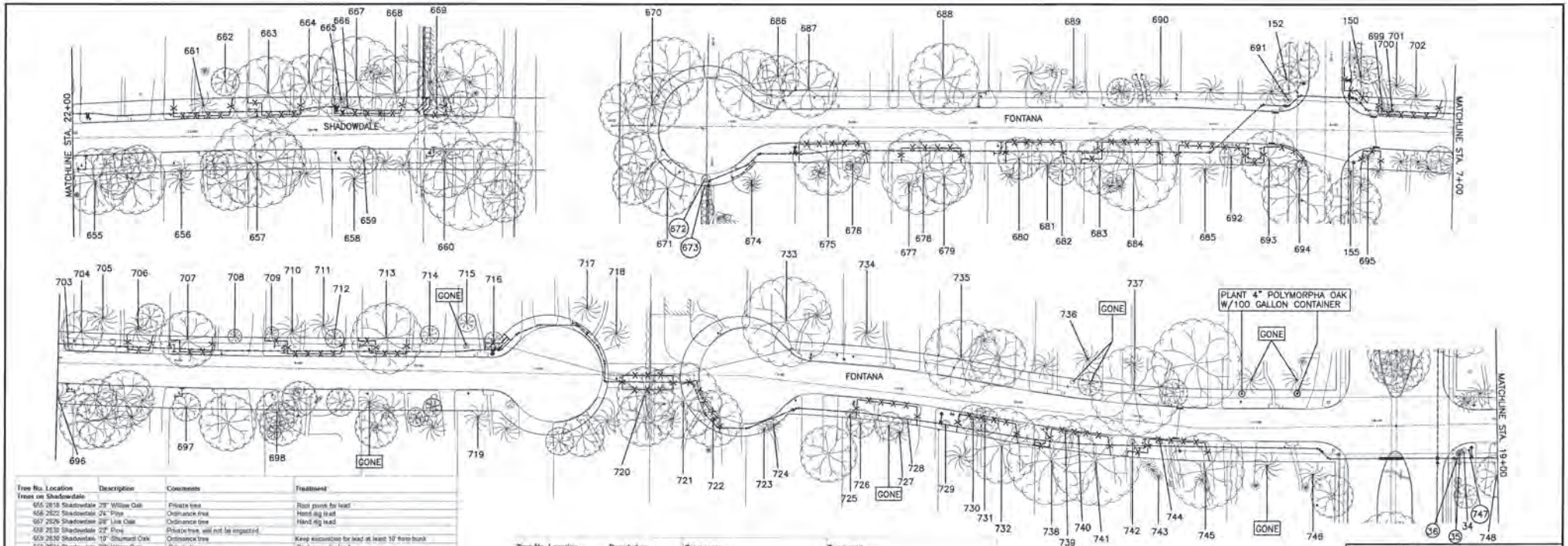

Tree No. Location	Description	Comments	Treatment
Trees on Shadowdale			
655 2818 Shadowdale	23" Willow Oak	Private tree	Root prune for lead
656 2820 Shadowdale	24" Pine	Ordinance tree	Hand dig lead
657 2826 Shadowdale	24" Live Oak	Ordinance tree	Hand dig lead
658 2830 Shadowdale	22" Pine	Private tree, will not be impacted	
659 2830 Shadowdale	10" Shumard Oak	Ordinance tree	Keep excavation for lead at least 10' from trunk
660 2834 Shadowdale	20" Water Oak	Private tree	Root prune for lead
661 2823 Shadowdale	16" Pine	Ordinance tree	Fence, Bore waterline
662 2823 Shadowdale	12" Magnolia	50% dieback, Private, will not be impacted	
663 2827 Shadowdale	20" Willow Oak	Private tree	Root prune for tap & lead, Fence, Bore waterline
664 2827 Shadowdale	18" Willow Oak	Private tree, will not be impacted	
665 2831 Shadowdale	2" Sago	Not ordinance tree	
666 2831 Shadowdale	2" Sago	Not ordinance tree	
667 2831 Shadowdale	36" Willow Oak	Private tree	Fence, Bore waterline
668 2831 Shadowdale	32" Willow Oak	Private tree	Fence, Bore waterline
669 2839 Shadowdale	17" Pine	Ordinance tree	Root prune for waterline, Fence
Trees on Fontana			
670 2603 Fontana	22" Live Oak	Ordinance tree	Hand dig lead
671 2602 Fontana	20" Live Oak	Private tree, will not be impacted	
672 2602 Fontana	4" Ligustrum	Not ordinance tree, remove for bends	Remove tree, no replacement required
673 2602 Fontana	4" Ligustrum	Not ordinance tree, remove for bends	Remove tree, no replacement required
674 2606 Fontana	15" Pine	Private tree	Root prune for waterline
675 2610 Fontana	30" Live Oak	Ordinance tree	Fence, Bore waterline
676 2610 Fontana	15" Pine	Private tree	Fence, Bore waterline
677 2614 Fontana	20" Pine	Private tree, will not be impacted	
678 2614 Fontana	20" Arizona Ash	Private tree	Fence, Bore waterline
679 2614 Fontana	20" Sugarberry	Private tree	Fence, Bore waterline
680 2618 Fontana	20" Live Oak	Ordinance tree	Root prune for tap & lead, Fence, Bore waterline
681 2618 Fontana	13" Pine	Private tree	Fence, Bore waterline
682 2618 Fontana	7" Water Oak	Private tree, will not be impacted	
683 2622 Fontana	20" Live Oak	Private tree	Root prune for tap & lead, Fence, Bore waterline
684 2622 Fontana	26" Live Oak	Private tree	Fence, Bore waterline
685 2630 Fontana	28" Pine	Private tree	Fence, Bore waterline
686 2607 Fontana	14" Water Oak	Private tree, will not be impacted	
687 2611 Fontana	12" Water Oak	Private tree	Hand dig lead
688 2615 Fontana	32" Live Oak	Private tree	Root prune for lead
689 2615 Fontana	2" Purple Leaf Plum	Private tree, will not be impacted	
690 2623 Fontana	16" Pine	Private tree, will not be impacted	
691 2631 Fontana	5" Pomegranate	Not ordinance tree	
692 2630 Fontana	4" Ligustrum	Not ordinance tree	
693 2630 Fontana	31" Water Oak	Ordinance tree	Root prune for waterline, Fence
694 2630 Fontana	20" Pine	Ordinance tree	Fence
695 2702 Fontana	6" Pine	Ordinance tree	Fence
696 2702 Fontana	18" Pine	Ordinance tree	Root prune for lead
697 2710 Fontana	12" Magnolia	Ordinance tree	Root prune for lead
698 2714 Fontana	16" Water Oak	Private tree, will not be impacted	
699 2703 Fontana	2" Sago	Not ordinance tree	
700 2703 Fontana	2" Sago	Not ordinance tree	
701 2703 Fontana	23" Pine	Private tree	Fence, Bore waterline
702 2703 Fontana	21" Pine	Private tree	Fence, Bore waterline
703 2703 Fontana	5" Crape Myrtle	Not ordinance tree	
704 2707 Fontana	12" Pecan	Private tree, will not be impacted	
705 2707 Fontana	20" Pine	Private tree, will not be impacted	
706 2707 Fontana	24" Pine	Private tree	Fence, Bore waterline
707 2711 Fontana	22" Magnolia	Ordinance tree	Root prune for tap & lead, Fence, Bore waterline
708 2711 Fontana	7" Crape Myrtle	Private tree, will not be impacted	
709 2715 Fontana	3" Crape Myrtle	Private tree, will not be impacted	
710 2715 Fontana	30" Pine	Private tree	Root prune for tap & lead, Fence, Bore waterline
711 2715 Fontana	20" Pine	Private tree	Fence, Bore waterline
712 2715 Fontana	4" Magnolia	Ordinance tree	Fence, Bore waterline
713 2719 Fontana	35" Willow Oak	Ordinance tree	Root prune for tap & lead, Fence, Bore waterline

Tree No. Location	Description	Comments	Treatment
Trees on Fontana			
714 2719 Fontana	4" Shumard Oak	Private tree, will not be impacted	
715 2723 Fontana	5" Shumard Oak	Private tree, will not be impacted	
716 2723 Fontana	6" Shumard Oak	Ordinance tree	Root prune for waterline, Fence, Clearance prune
717 2727 Fontana	22" Pine	Private tree	root prune for waterline
718 2727 Fontana	22" Pine	Private tree, will not be impacted	
719 2722 Fontana	18" Pine	Private tree, will not be impacted	
720 2726 Fontana	18" Pecan	Private tree, will not be impacted	Fence, Bore waterline
721 2730 Fontana	28" Willow Oak	40% dieback, Private tree	Fence, Bore waterline
722 2730 Fontana	20" Water Oak	Ordinance tree	Hand dig tap & lead, Fence, Bore waterline
723 2734 Fontana	3" Sago	Not ordinance tree	
724 2734 Fontana	3" Sago	Not ordinance tree, remove for bends	Remove tree, no replacement required
725 2738 Fontana	8" Crepe Myrtle	Not ordinance tree	
726 2738 Fontana	12" Live Oak	Private tree	Fence, Bore waterline
727 2738 Fontana	28" Pine	Private tree	Fence, Bore waterline
728 2738 Fontana	8" Crape Myrtle	Not ordinance tree	
729 2742 Fontana	3" Crape Myrtle	Not ordinance tree	
730 2742 Fontana	4" Yaupon	Not ordinance tree	
731 2742 Fontana	3" Yaupon	Not ordinance tree	
732 2742 Fontana	38" Willow Oak	Private tree	Fence, Bore waterline
733 2735 Fontana	40" Willow Oak	Private tree, will not be impacted	
734 2739 Fontana	2" Live Oak	Private tree, will not be impacted	
735 2743 Fontana	36" Live Oak	Private tree	Hand dig lead
736 2747 Fontana	22" Pine	Private tree, will not be impacted	
737 2751 Fontana	25" Willow Oak	Ordinance tree	Hand dig lead
738 2746 Fontana	33" Willow Oak	Private tree	Root prune for tap & lead, Fence, Bore waterline
739 2746 Fontana	2" Crepe Myrtle	Not ordinance tree	
740 2746 Fontana	2" Crepe Myrtle	Not ordinance tree	
741 2746 Fontana	32" Willow Oak	Private tree	Fence, Bore waterline
742 2746 Fontana	3" Crepe Myrtle	Not ordinance tree	
743 2750 Fontana	24" Pine	Private tree	Root prune for tap & lead, Fence, Bore waterline
744 2750 Fontana	4" Crepe Myrtle	Not ordinance tree	
745 2750 Fontana	28" Willow Oak	Private tree	Fence, Bore waterline
746 2754 Fontana	18" Pine	Private tree, will not be impacted	
747 2802 Fontana	3" Sago	Not ordinance tree, remove for bends	Remove tree, no replacement required
748 2802 Fontana	14" Water Oak	Private tree, will not be impacted	

TREE PRESERVATION PLAN LEGEND

- TREE NUMBER/LOCATION
- TREE TO BE REMOVED
- TREE PROTECTION FENCE
- ROOT PRUNING TRENCH
- REPLACEMENT PLANTING SPECIES AND SIZE/TYPE

NOTE:
THIS TREE PROTECTION PLAN WAS DEVELOPED WITH INFORMATION PROVIDED BY DESIGN ENGINEER IN DRAWINGS DATED JANUARY 2013. THE PLAN CONSIDERS ALL FITTINGS, VERTICAL OFFSETS AND AREAS OF NECESSARY EXCAVATION. CHANGES MADE TO DESIGN MAY COMPROMISE THE TREE PROTECTION PLAN. REFER TO SPECIFICATIONS 01562 AND 02915. CONDITION OF EACH TREE IS BASED ON VISUAL EVALUATION AT TIME OF DESIGN. CONDITION AND STRUCTURAL INTEGRITY OF EACH TREE IS NOT GUARANTEED BY DESIGNER AT ANY POINT IN THE FUTURE, AS ENVIRONMENTAL AND MAINTENANCE INFLUENCES ON EACH TREE CAN NOT BE DETERMINED BY DESIGNER.

S&B INFRASTRUCTURE, LTD.
Texas PE Firm Registration Number F-1582

DESIGN ENGINEER NAME:
ADDRESS:
TELEPHONE: 713-845-5401
TX FIRM NUMBER: F-1582
SURVEYED BY: AMANI ENG. INC.
FB No. P-5646

C.N. Koehl
Urban Forestry, Inc.
210 Stone Bush Ct. • Katy, Texas 77493
281-391-0022 ckoehl@cnkoehlurbanforestry.com
APPROVED: Craig A Koehl 01-21-2013

CITY OF HOUSTON
DEPARTMENT OF PUBLIC WORKS AND ENGINEERING

WATER LINE REPLACEMENT
IN SPRING SHADOWS WEST AREA

TREE PROTECTION PLAN
SHEET 12 OF 20

WBS NUMBER
S-000035-0129-3

DRAWING SCALE
1"=40'

CITY OF HOUSTON PM
JOHN MSIGWA, P.E.

SHEET NO. 137 OF 155

50308

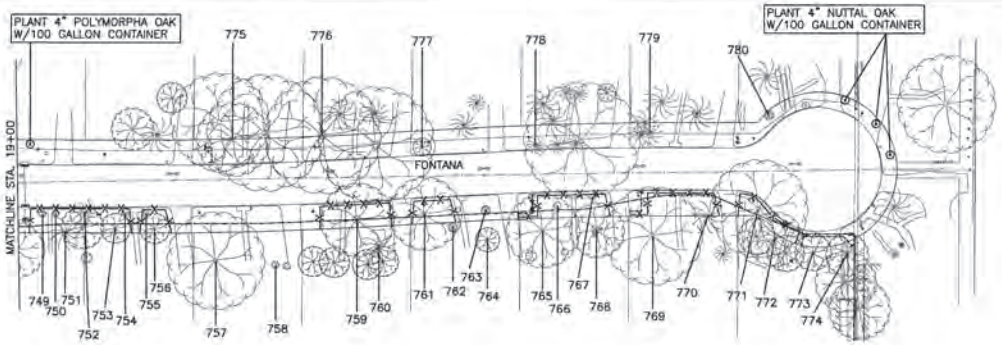

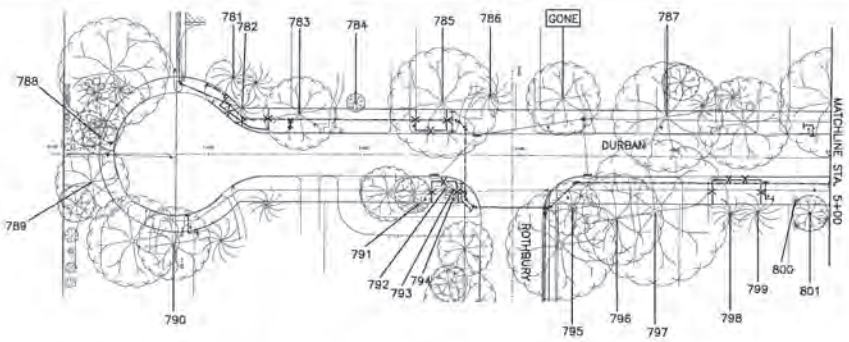

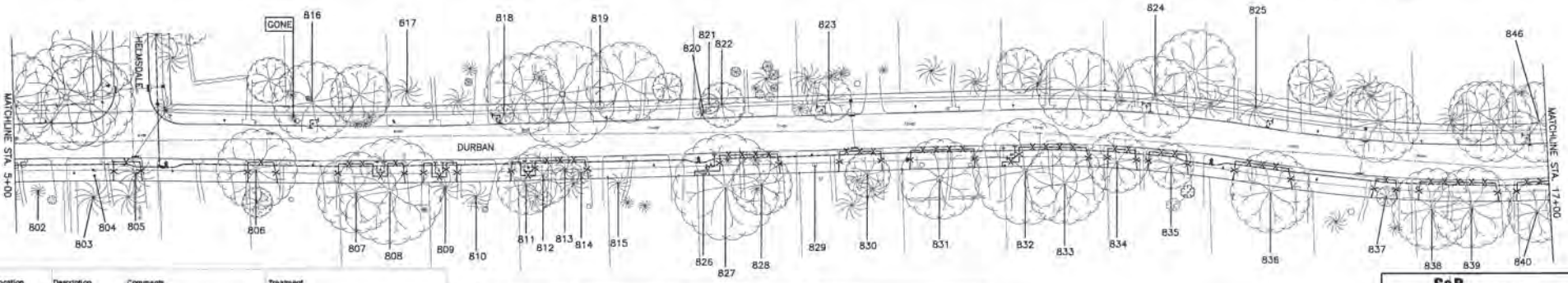

Tree No. Location	Description	Comments	Treatment
Trees on Fontana			
749 2802 Fontana	2" Crape Myrtle	Not ordinance tree	
750 2802 Fontana	3" Crape Myrtle	Not ordinance tree	
751 2802 Fontana	18" Pine	Ordinance tree	Fence, Bore waterline
752 2804 Fontana	12" Pine	Ordinance tree	Hand dig tap & lead, Fence, Bore waterline
753 2806 Fontana	8" Live Oak	Ordinance tree	Fence, Bore waterline
754 2806 Fontana	1" Sago	Not ordinance tree	
755 2806 Fontana	1" Sago	Not ordinance tree	
756 2806 Fontana	8" Live Oak	Ordinance tree	Fence, Bore waterline
757 2810 Fontana	28" Water Oak	Private tree, will not be impacted	
758 2810 Fontana	20" Willow Oak	Private tree, will not be impacted	
759 2814 Fontana	16" Water Oak	Ordinance tree	Fence, Bore waterline
760 2814 Fontana	25" Pine	Private tree, will not be impacted	
761 2818 Fontana	17" Water Oak	50% deadwood, Ordinance tree	Hand dig tap & lead, Fence, Bore waterline
762 2818 Fontana	2" Redbud	Private tree, will not be impacted	
763 2818 Fontana	3" Pear	Not ordinance tree	
764 2818 Fontana	4" Magnolia	Private tree, will not be impacted	
765 2822 Fontana	16" Live Oak	Private tree	Root prune for tap & lead, Fence, Bore waterline
766 2822 Fontana	16" Crepe Myrtle	Not ordinance tree	
767 2822 Fontana	3" Crepe Myrtle	Not ordinance tree	
768 2822 Fontana	10" Live Oak	Private tree	Fence, Bore waterline
769 2826 Fontana	30" Willow Oak	Private tree	Root prune for tap & lead, Fence, Bore waterline
770 2826 Fontana	18" Pine	Private tree	Fence, Bore waterline
771 2830 Fontana	27" Shumard Oak	Ordinance tree	Hand dig tap & lead, Fence, Bore waterline
772 2830 Fontana	12" Shumard Oak	Private tree	Root prune for bend, Fence, Bore waterline
773 2830 Fontana	10" Shumard Oak	Private tree	Root prune for waterline
774 2830 Fontana	19" Water Oak	Private tree	Root prune for waterline
775 2811 Fontana	27" Live Oak	Ordinance tree	Root prune for lead
776 2815 Fontana	34" Live Oak	Ordinance tree	Hand dig lead
777 2819 Fontana	4" Magnolia	Ordinance tree	Hand dig lead
778 2823 Fontana	1" Palm	Not ordinance tree	
779 2827 Fontana	31" Pine	Ordinance tree	Hand dig lead
780 2831 Fontana	2" Wisteria	Not ordinance tree	
Trees on Durban			
781 2607 Durban	22" Pine	Private tree	Root prune for waterline
782 2607 Durban	19" Pine	Ordinance tree	Hand dig bend, Fence, Bore waterline
783 2611 Durban	16" Arizona Ash	Not ordinance tree	
784 2611 Durban	3" Live Oak	Private tree, will not be impacted	
785 2615 Durban	16" Water Oak	Private tree	Root prune for bend, Fence, Bore waterline
786 2615 Durban	22" Pine	Private tree, will not be impacted	
787 2623 Durban	39" Live Oak	Ordinance tree	Hand dig lead
788 2623 Durban	14" Pear	Private tree, will not be impacted	
789 2602 Durban	22" Live Oak	Private tree, will not be impacted	
790 2602 Durban	24" Sycamore	Private tree	Root prune for lead
791 2610 Durban	16" Pine	Private tree	Hand dig lead
792 2610 Durban	12" Pine	Ordinance tree	Root prune for waterline, Fence
793 2610 Durban	12" Pine	Ordinance tree	Root prune for waterline, Fence
794 2610 Durban	8" Pine	Ordinance tree	Root prune for waterline, Fence
795 2618 Durban	6" Magnolia	Private tree, will not be impacted	
796 2618 Durban	34" Shumard Oak	Private tree	Fence, Bore waterline
797 2618 Durban	40" Shumard Oak	Private tree	Fence, Bore waterline

Tree No. Location	Description	Comments	Treatment
Trees on Durban			
798 2620 Durban	16" Pine	Private tree	Fence, Bore waterline
799 2620 Durban	25" Pine	Private tree	Root prune for tap & lead, Fence, Bore waterline
800 2622 Durban	4" Cedar	Not ordinance tree	
801 2622 Durban	12" Water Oak	Private tree, will not be impacted	
802 2622 Durban	2" Sago	Private tree, will not be impacted	
803 2626 Durban	22" Pine	Private tree, will not be impacted	
804 2626 Durban	2" Crepe Myrtle	Not ordinance tree	
805 2626 Durban	16" Pine	Ordinance tree	Fence, Bore waterline
806 2702 Durban	18" Water Oak	Ordinance tree	Fence, Bore waterline
807 2706 Durban	38" Willow Oak	Private tree	Fence, Bore waterline
808 2706 Durban	35" Water Oak	Private tree	Root prune for tap & lead, Fence, Bore waterline
809 2710 Durban	21" Pine	Private tree	Root prune for tap & lead, Fence, Bore waterline
810 2710 Durban	24" Pine	Private tree, will not be impacted	
811 2714 Durban	18" Sweetgum	Private tree	Root prune for tap & lead, Fence, Bore waterline
812 2714 Durban	12" Southern Red Oak	Ordinance tree	Root prune for tap & lead, Fence, Bore waterline
813 2714 Durban	12" Pine	Ordinance tree	Fence, Bore waterline
814 2714 Durban	14" Pine	Ordinance tree	Fence, Bore waterline
815 2718 Durban	15" Pine	Private tree, will not be impacted	
816 2707 Durban	31" Willow Oak	Private tree	Root prune for lead
817 2711 Durban	28" Pine	Private tree, will not be impacted	
818 2715 Durban	8" Pecan	Ordinance tree	Root prune for lead
819 2719 Durban	7" Crepe Myrtle	Not ordinance tree	
820 2723 Durban	9" Arborvitae	Not ordinance tree	
821 2723 Durban	4" Pecan	Ordinance tree	Keep excavation for lead at least 6' from trunk
822 2723 Durban	12" Magnolia	Ordinance tree	Keep excavation for lead at least 18' from trunk
823 2727 Durban	13" Magnolia	Ordinance tree	Root prune for lead
824 2738 Durban	15" Water Oak	Ordinance tree	Root prune for lead
825 2743 Durban	25" Pine	Ordinance tree	Root prune for lead
826 2722 Durban	11" Crepe Myrtle	Not ordinance tree	
827 2722 Durban	30" Willow Oak	Private tree	Root prune for tap & lead, Fence, Bore waterline
828 2722 Durban	20" Willow Oak	Private tree	Fence, Bore waterline
829 2726 Durban	1" Palm	Not ordinance tree	
830 2726 Durban	18" Water Oak	Private tree	Fence, Bore waterline
831 2730 Durban	26" Willow Oak	Private tree	Fence, Bore waterline
832 2734 Durban	45" Water Oak	Private tree	Root prune for tap & lead, Fence, Bore waterline
833 2734 Durban	38" Willow Oak	Private tree	Fence, Bore waterline
834 2738 Durban	14" Magnolia	Ordinance tree	Fence, Bore waterline
835 2738 Durban	12" Water Oak	Ordinance tree	Fence, Bore waterline
836 2742 Durban	35" Water Oak	Private tree	Fence, Bore waterline
837 2746 Durban	7" Water Oak	Ordinance tree	Fence, Bore waterline
838 2750 Durban	24" Willow Oak	Private tree	Fence, Bore waterline
839 2750 Durban	32" Willow Oak	Private tree	Fence, Bore waterline
840 2754 Durban	22" Willow Oak	Private tree	Fence, Bore waterline
846 2758 Durban	22" Live Oak	Private tree	Root prune for lead

TREE PRESERVATION PLAN LEGEND

- TREE NUMBER/LOCATION
- TREE TO BE REMOVED
- TREE PROTECTION FENCE
- ROOT PRUNING TRENCH
- REPLACEMENT PLANTING SPECIES AND SIZE/TYPE

NOTE:
THIS TREE PROTECTION PLAN WAS DEVELOPED WITH INFORMATION PROVIDED BY DESIGN ENGINEER IN DRAWINGS DATED JANUARY 2013. THE PLAN CONSIDERS ALL FITTINGS, VERTICAL OFFSETS AND AREAS OF NECESSARY EXCAVATION. CHANGES MADE TO DESIGN MAY COMPROMISE THE TREE PROTECTION PLAN. REFER TO SPECIFICATIONS 01562 AND 02915. CONDITION OF EACH TREE IS BASED ON VISUAL EVALUATION AT TIME OF DESIGN. CONDITION AND STRUCTURAL INTEGRITY OF EACH TREE IS NOT GUARANTEED BY DESIGNER AT ANY POINT IN THE FUTURE. AS ENVIRONMENTAL AND MAINTENANCE INFLUENCES ON EACH TREE CAN NOT BE DETERMINED BY DESIGNER.

S&B INFRASTRUCTURE, LTD.
Texas PE Firm Registration Number F-1582

DESIGN ENGINEER NAME:
ADDRESS:
TELEPHONE: 713-845-5401
TX FIRM NUMBER: F-1582
SURVEYED BY: AMANI ENG. INC.
FB No. F-5848

C.N. Koehl
Urban Forestry, Inc
210 Stone Bush Ct. • Katy, Texas 77493
281-391-8022 chuck@koehlurbanforestry.com
APPROVED: Chuck N. Koehl 01-21-2013

CITY OF HOUSTON
DEPARTMENT OF PUBLIC WORKS AND ENGINEERING

WATER LINE REPLACEMENT
IN SPRING SHADOWS WEST AREA

TREE PROTECTION PLAN
SHEET 13 OF 20

WBS NUMBER
S-000035-0129-3

DRAWING SCALE
1"=40'

CITY OF HOUSTON PM
JOHN MSIGWA, P.E.

SHEET NO. 138 OF 155

50308
HOUSTON, TEXAS

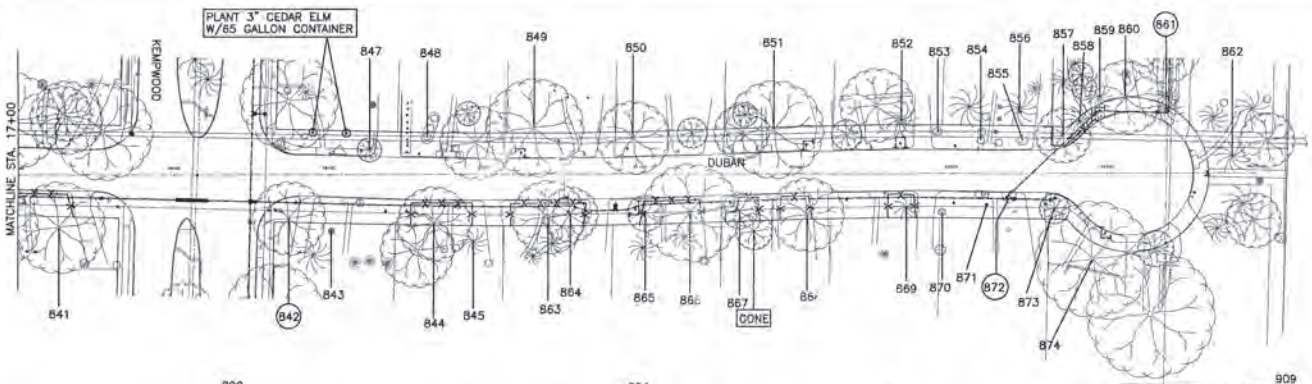

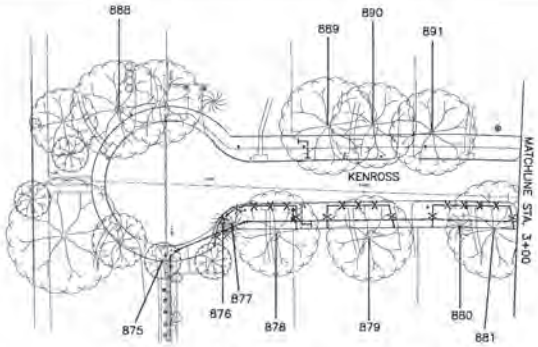

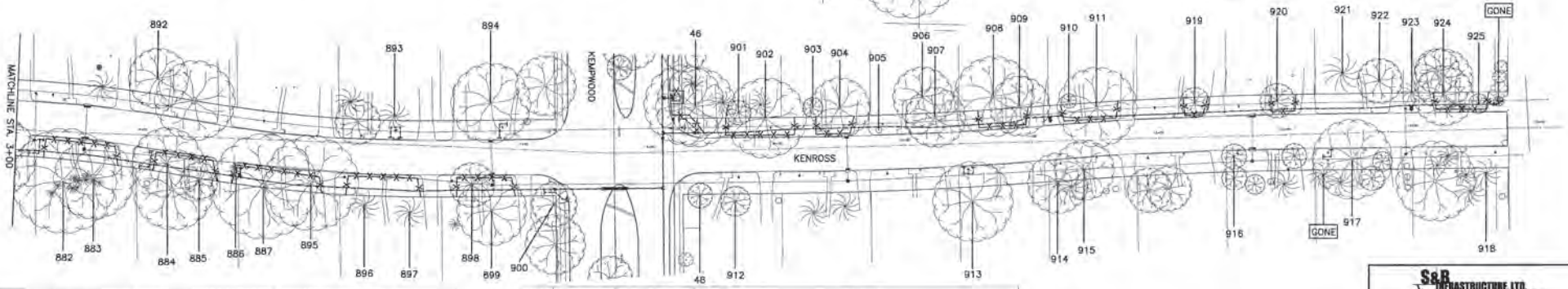

Tree No.	Location	Description	Comments	Treatment
Trees on Durban				
841	2754 Durban	26" Willow Oak	Private tree	Fence, Bore waterline
842	2802 Durban	15" Water Oak	Ordinance tree, remove for bends	Remove tree, Provide 15" replacement
843	2802 Durban	1" Shumard Oak	Private tree, will not be impacted	
844	2806 Durban	18" Water Oak	Ordinance tree	Fence, Bore waterline
845	2806 Durban	14" Pine	Private tree, will not be impacted	
846	2755 Durban	22" Live Oak	Private tree	Root prune for lead
847	2803 Durban	2" Redbud	Not ordinance tree	
848	2807 Durban	2" Purple Leaf Plum	Not ordinance tree	
849	2811 Durban	26" Water Oak	Private tree	Root prune for lead
850	2815 Durban	20" Southern Red Oak	Ordinance tree	Hand dig lead
851	2819 Durban	36" Willow Oak	Ordinance tree	Root prune for lead
852	2823 Durban	24" Pine	Private tree	Root prune for lead
853	2825 Durban	2" Crepe Myrtle	Not ordinance tree	
854	2827 Durban	8" Crepe Myrtle	Not ordinance tree	
855	2827 Durban	7" Crepe Myrtle	Not ordinance tree	
856	2827 Durban	18" Pine	Private tree, will not be impacted	
857	2831 Durban	15" Post Oak	Ordinance tree	Fence, Bore waterline
858	2831 Durban	17" Pine	Ordinance tree	Root prune for bend, Fence, Bore waterline
859	2831 Durban	12" Pine	Private tree	Root prune for bend, Fence, Bore waterline
860	2831 Durban	18" Silver Maple	30% dieback, Private	
861	2835 Durban	15" Pine	Easement tree, Remove for bend	Remove tree, no replacement required
862	2835 Durban	10" Pine	Private tree, will not be impacted	
863	2840 Durban	25" Live Oak	Ordinance tree	Fence, Bore waterline
864	2840 Durban	12" Shumard Oak	Ordinance tree	Hand dig tap & lead, Fence, Bore waterline
865	2844 Durban	10" Magnolia	Ordinance tree	Root prune for tap & lead, Fence, Bore waterline
866	2844 Durban	20" Live Oak	Ordinance tree	Fence, Bore waterline
867	2848 Durban	5" Magnolia	20% dieback, Ordinance tree	Root prune for tap & lead, Fence, Bore waterline
868	2848 Durban	22" Water Oak	Ordinance tree	Fence, Bore waterline
869	2822 Durban	10" Pine	Ordinance tree	Fence, Bore waterline
870	2826 Durban	2" Crepe Myrtle	Not ordinance tree	
871	2826 Durban	10" Redbud	Not ordinance tree	
872	2826 Durban	2" Mexican Sage	Not ordinance tree, remove for bends	Remove tree, no replacement required
873	2830 Durban	7" Redbud	Not ordinance tree	
874	2830 Durban	34" Water Oak	Private tree	Root prune for lead
Trees on Kenross				
875	2706 Kenross	7" Sweetgum	Easement tree, Remove for bend	Remove tree, no replacement required
876	2706 Kenross	22" Pine	Ordinance tree	Fence, Bore waterline
877	2706 Kenross	21" Pine	Ordinance tree	Hand dig bend & lead, Fence, Bore waterline
878	2706 Kenross	28" Live Oak	Private tree	Root prune for tap & lead, Fence, Bore waterline
879	2710 Kenross	42" Water Oak	Private tree	Fence, Bore waterline
880	2714 Kenross	15" Pine	Ordinance tree	Fence, Bore waterline
881	2714 Kenross	28" Live Oak	Private tree	Fence, Bore waterline
882	2718 Kenross	42" Water Oak	Private tree	Root prune for tap & lead, Fence, Bore waterline

Tree No.	Location	Description	Comments	Treatment
Trees on Kenross				
883	2719 Kenross	35" Live Oak	Private tree	Fence, Bore waterline
884	2722 Kenross	20" Green Ash	Ordinance tree	Root prune for tap & lead, Fence, Bore waterline
885	2722 Kenross	16" Magnolia	Private tree	Fence, Bore waterline
886	2726 Kenross	30" Palm	Not ordinance tree	
887	2726 Kenross	40" Water Oak	Ordinance tree	Hand dig tap & lead, Fence, Bore waterline
888	2703 Kenross	40" Live Oak	Private tree	Hand dig lead
889	2711 Kenross	36" Live Oak	Private tree	Root prune for lead
890	2711 Kenross	28" Cedar Elm	Private tree	Hand dig lead
891	2715 Kenross	20" Live Oak	Private tree	Hand dig lead
892	2723 Kenross	18" Sweetgum	Private tree, will not be impacted	
893	2731 Kenross	25" Pine	Private tree	Root prune for lead
894	2735 Kenross	34" Water Oak	Private tree	Root prune for lead
895	2726 Kenross	34" Water Oak	Ordinance tree	Fence, Bore waterline
896	2730 Kenross	28" Pine	Private tree	Fence, Bore waterline
897	2730 Kenross	30" Pine	Private tree	Fence, Bore waterline
898	2734 Kenross	12" Water Oak	Ordinance tree	Fence, Bore waterline
899	2734 Kenross	30" Live Oak	Private tree	Fence, Bore waterline
900	2734 Kenross	14" Pecan	Private tree	Root prune for waterline
901	2803 Kenross	4" Redbud	Private tree, will not be impacted	
902	2803 Kenross	22" Arizona Ash	Ordinance tree	Hand dig tap & lead, Fence, Bore waterline
903	2807 Kenross	4" Magnolia	30% dieback, Private	
904	2807 Kenross	28" Live Oak	Private tree	Fence, Bore waterline
905	2811 Kenross	6" Burfed Holly	Not ordinance tree	
906	2811 Kenross	20" Water Oak	Private tree, will not be impacted	
907	2811 Kenross	15" Arizona Ash	Not ordinance tree	
908	2815 Kenross	28" Arizona Ash	40% dieback, Private tree	Fence, Bore waterline
909	2815 Kenross	20" Arizona Ash	Private tree	Fence, Bore waterline
910	2819 Kenross	4" Red Maple	Private tree, will not be impacted	
911	2819 Kenross	24" Live Oak	Ordinance tree	Fence, Bore waterline
912	2812 Kenross	12" Water Oak	Private tree, will not be impacted	
913	2814 Kenross	40" Live Oak	Private tree	Root prune for lead
914	2819 Kenross	22" Arizona Ash	Private tree, will not be impacted	
915	2818 Kenross	15" Arizona Ash	Not ordinance tree	
916	2826 Kenross	8" Live Oak	Ordinance tree	Hand dig lead
917	2830 Kenross	20" Water Oak	Ordinance tree	Root prune for lead
918	2834 Kenross	18" Pine	Private tree, will not be impacted	
919	2823 Kenross	10" Pecan	Ordinance tree	Fence, Bore waterline
920	2827 Kenross	10" Magnolia	20% dieback, Ordinance tree	Fence, Bore waterline
921	2831 Kenross	25" Pine	Private tree, will not be impacted	
922	2831 Kenross	12" Willow Oak	Private tree, will not be impacted	
923	2835 Kenross	13" Pine	Private tree	Root prune for waterline
924	2835 Kenross	22" Arizona Ash	Ordinance tree	Fence, Bore waterline
925	2835 Kenross	5" Magnolia	Ordinance tree	Fence, Bore waterline

TREE PRESERVATION PLAN LEGEND

- TREE NUMBER/LOCATION
- TREE TO BE REMOVED
- TREE PROTECTION FENCE
- ROOT PRUNING TRENCH
- REPLACEMENT PLANTING SPECIES AND SIZE/TYPE

NOTE:
THIS TREE PROTECTION PLAN WAS DEVELOPED WITH INFORMATION PROVIDED BY DESIGN ENGINEER IN DRAWINGS DATED JANUARY 2013. THE PLAN CONSIDERS ALL FITTINGS, VERTICAL OFFSETS AND AREAS OF NECESSARY EXCAVATION. CHANGES MADE TO DESIGN MAY COMPROMISE THE TREE PROTECTION PLAN. REFER TO SPECIFICATIONS 01562 AND 02915. CONDITION OF EACH TREE IS BASED ON VISUAL EVALUATION AT TIME OF DESIGN. CONDITION AND STRUCTURAL INTEGRITY OF EACH TREE IS NOT GUARANTEED BY DESIGNER AT ANY POINT IN THE FUTURE, AS ENVIRONMENTAL AND MAINTENANCE INFLUENCES ON EACH TREE CAN NOT BE DETERMINED BY DESIGNER.

S&B INFRASTRUCTURE, LTD.
Texas PE Firm Registration Number: F-1582

DESIGN ENGINEER NAME:
ADDRESS:
TELEPHONE: 713-845-5401
TX FIRM NUMBER: F-1582
SURVEYED BY: AMANI ENG. INC.
FB No. P-5648

C.N. Koehl
Urban Forestry, Inc.
210 Stone Bush Ct - Katy, Texas 77493
281-391-0022 cnkoehl@koehlurbanforestry.com
APPROVED: Craig A Koehl 01-31-2013

CITY OF HOUSTON
DEPARTMENT OF PUBLIC WORKS AND ENGINEERING

WATER LINE REPLACEMENT
IN SPRING SHADOWS WEST AREA

TREE PROTECTION PLAN
SHEET 14 OF 20

WBS NUMBER
S-000035-0129-3

DRAWING SCALE
1"=40'

CITY OF HOUSTON PM
JOHN MSIGWA, P.E.

50308
HOUSTON, TEXAS

SHEET NO. 139 OF 155

DATE: Jan 23, 2013-3:27pm USERNAME: hub FILENAME: 139-06 Spring Shadows Reel 19-14.dwg

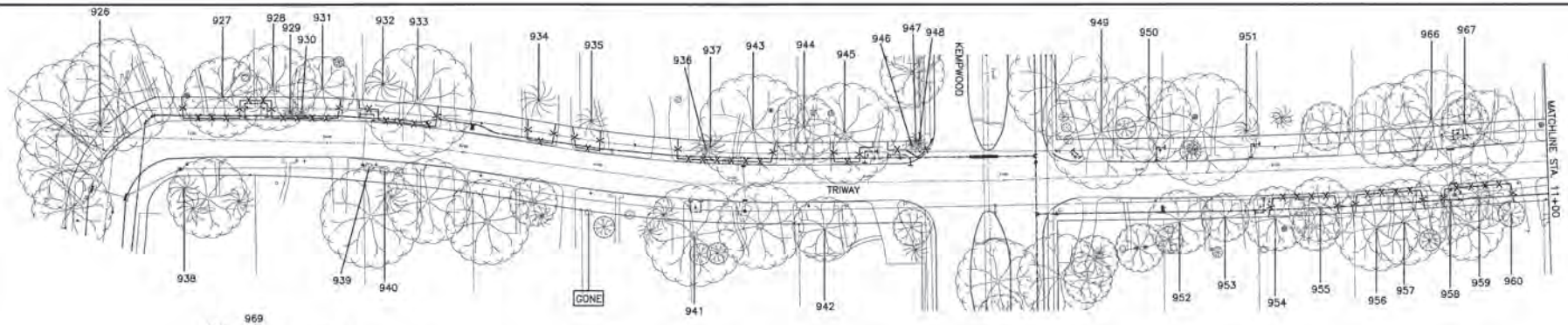

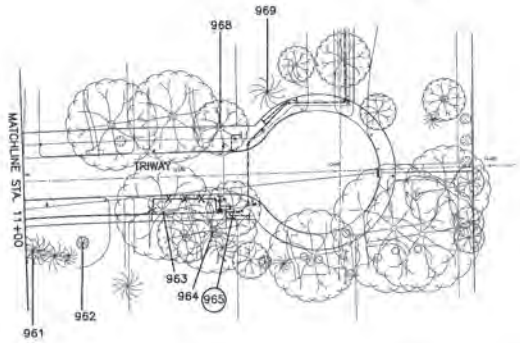

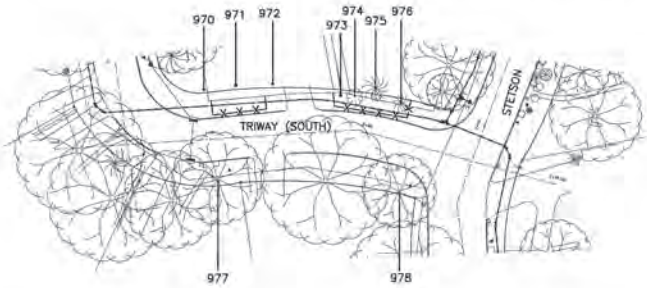

TREE PRESERVATION PLAN LEGEND

- TREE NUMBER/LOCATION
- TREE TO BE REMOVED
- TREE PROTECTION FENCE
- ROOT PRUNING TRENCH
- REPLACEMENT PLANTING SPECIES AND SIZE/TYPE

NOTE:
THIS TREE PROTECTION PLAN WAS DEVELOPED WITH INFORMATION PROVIDED BY DESIGN ENGINEER IN DRAWINGS DATED JANUARY 2013. THE PLAN CONSIDERS ALL FITTINGS, VERTICAL OFFSETS AND AREAS OF NECESSARY EXCAVATION. CHANGES MADE TO DESIGN MAY COMPROMISE THE TREE PROTECTION PLAN. REFER TO SPECIFICATIONS 01562 AND 02915. CONDITION OF EACH TREE IS BASED ON VISUAL EVALUATION AT TIME OF DESIGN. CONDITION AND STRUCTURAL INTEGRITY OF EACH TREE IS NOT GUARANTEED BY DESIGNER AT ANY POINT IN THE FUTURE, AS ENVIRONMENTAL AND MAINTENANCE INFLUENCES ON EACH TREE CAN NOT BE DETERMINED BY DESIGNER.

Tree No. Location	Description	Comments	Treatment
Trees on Triway			
926 2715 Triway	18" Pine	Private tree, will not be impacted	
927 2719 Triway	28" Live Oak	Ordinance tree	Root prune for tap & lead, Fence, Bore waterline
928 2723 Triway	30" Live Oak	Private tree	Root prune for tap & lead, Fence, Bore waterline
929 2723 Triway	6" Arborvitae	Not ordinance tree	
930 2723 Triway	8" Arborvitae	Not ordinance tree	
931 2723 Triway	22" Live Oak	Private tree	Fence, Bore waterline
932 2727 Triway	24" Pine	Private tree	Root prune for tap, Fence, Bore waterline
933 2727 Triway	50" Live Oak	Ordinance tree	Hand dig tap & lead, Fence, Bore waterline
934 2731 Triway	28" Pine	Private tree	Fence, Bore waterline
935 2735 Triway	20" Pine	Private tree	Fence, Bore waterline
936 2739 Triway	15" Pine	Ordinance tree	Hand dig tap & lead, Fence, Bore waterline
937 2739 Triway	22" Pine	Ordinance tree	Fence, Bore waterline
938 2715 Triway	22" Pine	Private tree, will not be impacted	
939 2726 Triway	3" Crape Myrtle	Not ordinance tree	
940 2726 Triway	6" Crape Myrtle	Not ordinance tree	
941 2738 Triway	32" Live Oak	Private tree	Root prune for lead
942 2742 Triway	24" Live Oak	Private tree, will not be impacted	
943 2739 Triway	30" Water oak	Private tree	Fence, Bore waterline
944 2743 Triway	15" Water Oak	Private tree, will not be impacted	
945 2743 Triway	38" Live Oak	Private tree	Root prune for tap & lead, Fence, Bore waterline
946 2743 Triway	14" Pine	Ordinance tree	Root prune for waterline, Fence
947 2743 Triway	13" Pine	Private tree	Root prune for waterline, Fence
948 2743 Triway	12" Pine	Ordinance tree	Root prune for waterline, Fence
949 2803 Triway	22" Live Oak	Private tree	Root prune for fire hydrant salvage
950 2803 Triway	30" Live Oak	Private tree	Root prune for lead
951 2807 Triway	17" Cedar	Private tree	Root prune for lead
952 2808 Triway	16" Shumard Oak	Private tree	Fence, Bore waterline
953 2808 Triway	14" Shumard Oak	Ordinance tree	Fence, Bore waterline
954 2810 Triway	14" Water Oak	Private tree	Root prune for tap & lead, Fence, Bore waterline
955 2810 Triway	18" Shumard Oak	Ordinance tree	Fence, Bore waterline
956 2814 Triway	30" Water oak	Private tree	Fence, Bore waterline
957 2814 Triway	36" Live Oak	Private tree	Fence, Bore waterline
958 2818 Triway	16" Water Oak	Ordinance tree	Hand dig tap & lead, Fence, Bore waterline
959 2818 Triway	20" Shumard Oak	Ordinance tree	Fence, Bore waterline

Tree No. Location	Description	Comments	Treatment
Trees on Triway			
960 2818 Triway	5" Water Oak	Private tree, will not be impacted	
961 2822 Triway	12' Palm	Private tree, will not be impacted	
962 2822 Triway	3" Live Oak	Private tree, will not be impacted	
963 2826 Triway	22" Live Oak	Ordinance tree	Fence, Bore waterline
964 2826 Triway	26" Live Oak	Private tree	Root prune for fire hydrant, Fence, Bore waterline
965 2826 Triway	15" Water Oak	Ordinance tree, remove for bends	Remove tree. Provide 15" replacement
966 2815 Triway	30" Shumard Oak	Private tree	Hand dig lead
967 2819 Triway	12" Shumard Oak	Private tree	Root prune for lead
968 2827 Triway	16" Live Oak	Ordinance tree	Root prune for lead
969 2831 Triway	21" Pine	Private tree	Root prune for waterline
970 2718 Triway	10' Palm	Private tree, will not be impacted	
971 2718 Triway	14" Pine	Private tree	Fence, Bore waterline
972 2718 Triway	10" Crape Myrtle	Private tree, will not be impacted	
973 2715 Triway	2' Yucca	Not ordinance tree	
974 2715 Triway	15" Oleander	Not ordinance tree	
975 2715 Triway	13" Pine	Private tree	Fence, Bore waterline
976 2715 Triway	10" Baldcypress	Ordinance tree	Fence, Bore waterline
977 2711 Triway	23" Water Oak	Ordinance tree	Hand dig lead
978 2707 Triway	16" Water Oak	Ordinance tree	Hand dig lead

S&B INFRASTRUCTURE, LTD.

DESIGN ENGINEER NAME:
ADDRESS:
TELEPHONE: 713-845-5401
TX. FIRM NUMBER: F-1582
SURVEYED BY: AMANI ENG. INC.
FB No. P-5648

C.N. Koehl
Urban Forestry, Inc
210 Stone Bush Ct. • Katy, Texas 77493
281-391-8022 ckoehl@koehlurbanforestry.com
APPROVED: Craig N Koehl 01-21-2013

CITY OF HOUSTON
DEPARTMENT OF PUBLIC WORKS AND ENGINEERING

WATER LINE REPLACEMENT
IN SPRING SHADOWS WEST AREA

TREE PROTECTION PLAN
SHEET 15 OF 20

WBS NUMBER
S-000035-0129-3

DRAWING SCALE
1"=40'

CITY OF HOUSTON PM
JOHN MSIGWA, P.E.

SHEET NO. 140 OF 155

30308

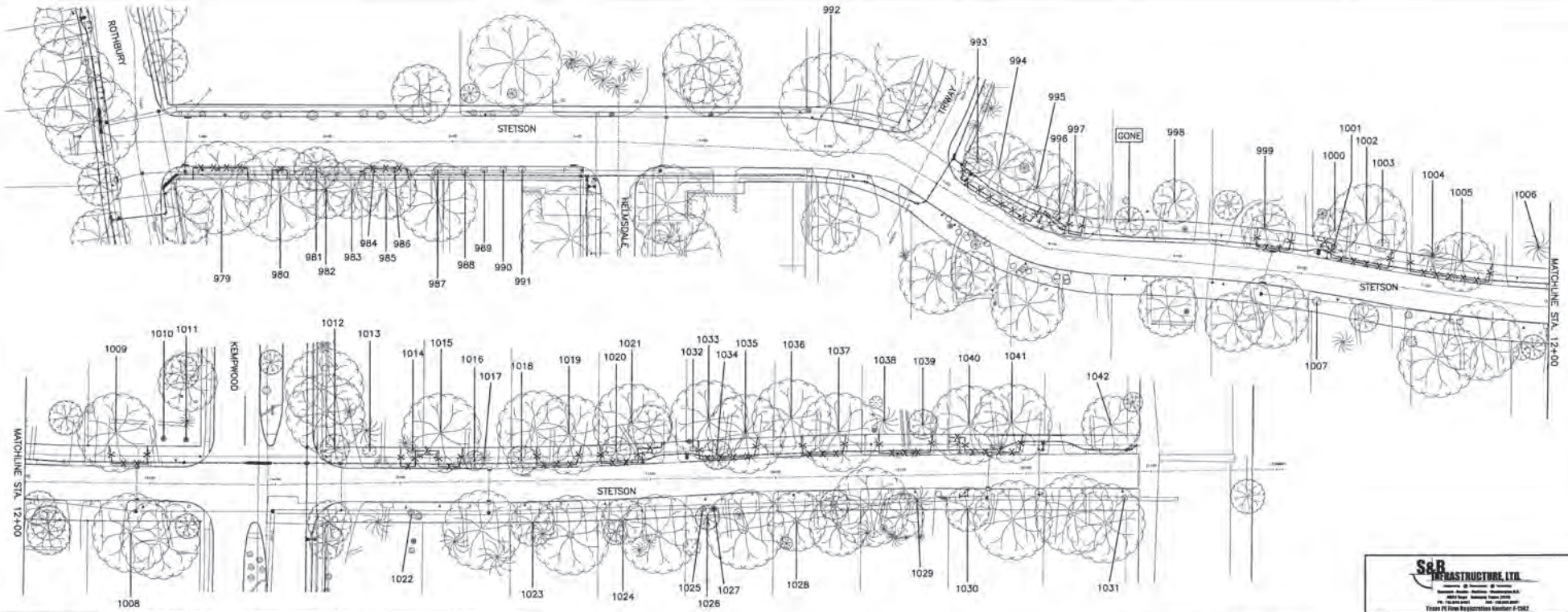

Tree No. Location	Description	Comments	Treatment
Trees on Stetson			
979 2602 Stetson	28" Water Oak	Private tree	Fence, Bore waterline
980 2602 Stetson	28" Live Oak	Private tree	Fence, Bore waterline
981 2606 Stetson	13" Sweetgum	Not ordinance tree	
982 2606 Stetson	18" Sweetgum	30% dieback, Private, will not be impacted	
983 2608 Stetson	18" Tallow	Private tree, will not be impacted	
984 2610 Stetson	11" Crepe Myrtle	Not ordinance tree	
985 2610 Stetson	20" Sweetgum	Private tree	Fence, Bore waterline
986 2610 Stetson	13" Crepe Myrtle	Not ordinance tree	
987 2610 Stetson	12" Crepe Myrtle	Not ordinance tree	
988 10311 Helmsdale	17" Crepe Myrtle	Not ordinance tree	
989 10311 Helmsdale	4" Crepe Myrtle	Not ordinance tree	
990 10311 Helmsdale	18" Crepe Myrtle	Not ordinance tree	
991 10311 Helmsdale	19" Crepe Myrtle	Not ordinance tree	
992 2707 Stetson	45" Live Oak	Private tree	Hand dig lead
993 2715 Stetson	10" Magnolia	40% dieback, Private tree	Fence, Bore waterline
994 2715 Stetson	24" Live Oak	Private tree	Fence, Bore waterline
995 2715 Stetson	32" Water Oak	Private tree	Fence, Bore waterline
996 2715 Stetson	1" Crepe Myrtle	Not ordinance tree	
997 2715 Stetson	18" Water Oak	Private tree	Root prune for bend, Fence, Bore waterline
998 2719 Stetson	18" Magnolia	Private tree, will not be impacted	
999 2723 Stetson	14" Magnolia	Private tree	Fence, Bore waterline
1000 2727 Stetson	20" Water Oak	Private tree	Root prune for tap & lead, Fence, Bore waterline
1001 2727 Stetson	3" Redbud	Not ordinance tree	
1002 2727 Stetson	34" Live Oak	Private tree	Fence, Bore waterline
1003 2727 Stetson	18" Crepe Myrtle	Private tree	Fence, Bore waterline
1004 2731 Stetson	20" Pine	Private tree	Hand dig tap & lead, Fence, Bore waterline
1005 2731 Stetson	20" Water Oak	Ordinance tree	Fence, Bore waterline
1006 2735 Stetson	25" Pine	Private tree, will not be impacted	
1007 2726 Stetson	15" Crepe Myrtle	Not ordinance tree	
1008 2738 Stetson	36" Live Oak	Private tree, will not be impacted	
1009 2739 Stetson	30" Sweetgum	Private tree	Fence, Bore waterline
1010 2739 Stetson	3" Pear	Private tree, will not be impacted	
1011 2739 Stetson	3" Pear	Private tree, will not be impacted	
1012 2803 Stetson	10" Yaupon	Not ordinance tree	
1013 2803 Stetson	14" Crepe Myrtle	Not ordinance tree	
1014 2803 Stetson	6" Pine	Ordinance tree	Root prune for tap & lead, Fence, Bore waterline
1015 2807 Stetson	28" Pine	Private tree	Root prune for tap & lead, Fence, Bore waterline
1016 2807 Stetson	1" Sago	Not ordinance tree	

Tree No. Location	Description	Comments	Treatment
Trees on Stetson			
1017 2807 Stetson	4" Ligustrum	Not ordinance tree	
1018 2811 Stetson	9" Camphor	Not ordinance tree	
1019 2811 Stetson	30" Water oak	Private tree	Fence, Bore waterline
1020 2815 Stetson	8" Live Oak	Ordinance tree	Fence, Bore waterline
1021 2815 Stetson	32" Water Oak	Private tree	Root prune for tap & lead, Fence, Bore waterline
1022 2802 Stetson	7" Crepe Myrtle	Not ordinance tree	
1023 2810 Stetson	12" Water Oak	Private tree, will not be impacted	
1024 2814 Stetson	15" Water Oak	Private tree, will not be impacted	
1025 2818 Stetson	6" Crepe Myrtle	Not ordinance tree	
1026 2818 Stetson	10" Water Oak	Private tree, will not be impacted	
1027 2818 Stetson	1" Pear	Not ordinance tree	
1028 2822 Stetson	20" Water Oak	Private tree, will not be impacted	
1029 2826 Stetson	4" Yucca	Not ordinance tree	
1030 2830 Stetson	16" Water Oak	Private tree	Root prune for lead
1031 2834 Stetson	2" Crepe Myrtle	Not ordinance tree	
1032 2819 Stetson	2" Crepe Myrtle	Not ordinance tree	
1033 2819 Stetson	13" Live Oak	Private tree	Fence, Bore waterline
1034 2819 Stetson	4" Sweetgum	Not ordinance tree	
1035 2819 Stetson	34" Live Oak	Private tree	Fence, Bore waterline
1036 2823 Stetson	30" Water Oak	30% dieback, Private, will not be impacted	
1037 2823 Stetson	24" Water Oak	Private tree	Fence, Bore waterline
1038 2827 Stetson	28" Pine	Private tree	Fence, Bore waterline
1039 2827 Stetson	30" Arizona Ash	Private tree	Fence, Bore waterline
1040 2831 Stetson	26" Live Oak	Private tree	Root prune for tap & lead, Fence, Bore waterline
1041 2831 Stetson	40" Live Oak	Private tree	Fence, Bore waterline
1042 2835 Stetson	16" Water Oak	Private tree, will not be impacted	

TREE PRESERVATION PLAN LEGEND

- TREE NUMBER/LOCATION
- TREE TO BE REMOVED
- TREE PROTECTION FENCE
- ROOT PRUNING TRENCH
- REPLACEMENT PLANTING SPECIES AND SIZE/TYPE

NOTE:
THIS TREE PROTECTION PLAN WAS DEVELOPED WITH INFORMATION PROVIDED BY DESIGN ENGINEER IN DRAWINGS DATED JANUARY 2013. THE PLAN CONSIDERS ALL FITTINGS, VERTICAL OFFSETS AND AREAS OF NECESSARY EXCAVATION. CHANGES MADE TO DESIGN MAY COMPROMISE THE TREE PROTECTION PLAN. REFER TO SPECIFICATIONS 01562 AND 02915. CONDITION OF EACH TREE IS BASED ON VISUAL EVALUATION AT TIME OF DESIGN. CONDITION AND STRUCTURAL INTEGRITY OF EACH TREE IS NOT GUARANTEED BY DESIGNER AT ANY POINT IN THE FUTURE, AS ENVIRONMENTAL AND MAINTENANCE INFLUENCES ON EACH TREE CAN NOT BE DETERMINED BY DESIGNER.

S&B INFRASTRUCTURE, LTD.
Texas PE Firm Registration Number F-1582

DESIGN ENGINEER NAME:
ADDRESS:
TELEPHONE: 713-845-5401
TX FIRM NUMBER: F-1582
SURVEYED BY: AMANI ENG. INC.
FB No. P-5648

C.N. Koehl
Urban Forestry, Inc
210 Stone Bush Ct. • Katy, Texas 77493
(281) 391-0022 ck.koehl@koehlurbanforestry.com
APPROVED: Craig A. Koehl 01-21-2013

CITY OF HOUSTON
DEPARTMENT OF PUBLIC WORKS AND ENGINEERING

WATER LINE REPLACEMENT
IN SPRING SHADOWS WEST AREA

TREE PROTECTION PLAN
SHEET 16 OF 20

WBS NUMBER
S-000035-0129-3

DRAWING SCALE
1"=40'

CITY OF HOUSTON PM
JOHN MSIGWA, P.E.

SHEET NO. 141 OF 155

50308
HOUSTON, TEXAS

DATE: Jan 21, 2013-3:39pm USERNAME: mcib FILENAME: 141-SB Spring Shadows West 16-16.dwg

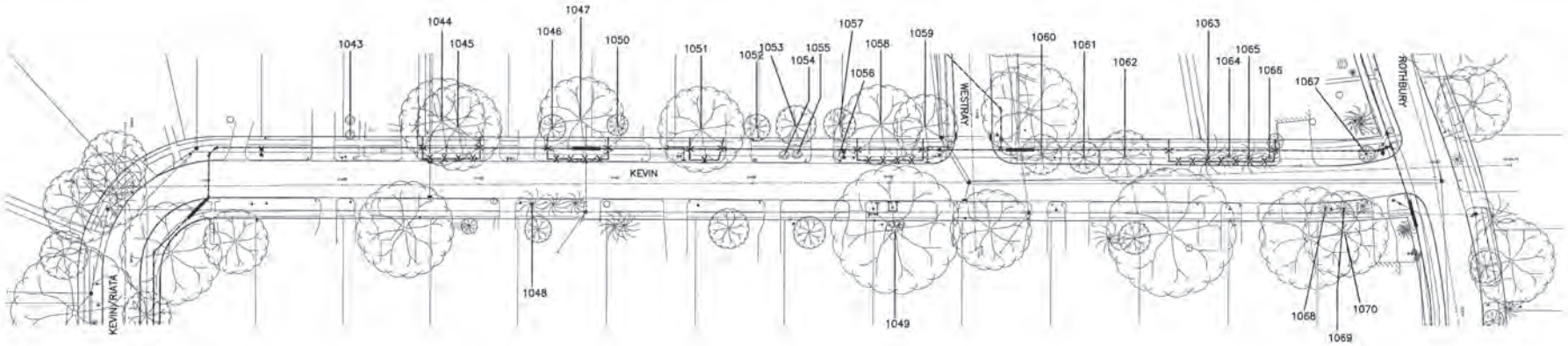

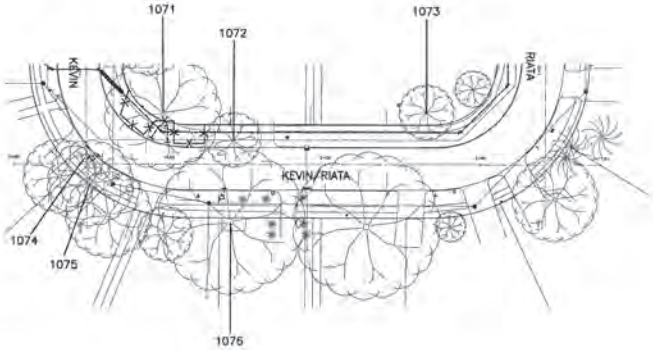

Tree No.	Location	Description	Comments	Treatment
Trees on Kevin				
1043	2527 Kevin	5" Crepe Myrtle	Topped, Private, will not be impacted	
1044	2531 Kevin	28" Water Oak	Private tree	Fence, Bore waterline
1045	2531 Kevin	24" Live Oak	Private tree	Fence, Bore waterline
1046	2535 Kevin	8" Water Oak	Private tree, will not be impacted	
1047	2535 Kevin	32" Water Oak	Private tree	Fence, Bore waterline
1048	2538 Kevin	16" Pine	Private tree	Hand dig lead
1049	2554 Kevin	30" Live Oak	Private tree	Root prune for lead
1050	2539 Kevin	5" Bur Oak	Private tree, will not be impacted	
1051	2543 Kevin	30" Live Oak	Private tree	Root prune for tap & lead, Fence, Bore waterline
1052	2543 Kevin	8" Bur Oak	Private tree, will not be impacted	
1053	2547 Kevin	12" Pecan	Private tree, will not be impacted	
1054	2547 Kevin	6" Crepe Myrtle	Not ordinance tree	
1055	2547 Kevin	6" Crepe Myrtle	Not ordinance tree	
1056	2547 Kevin	6" Crepe Myrtle	Not ordinance tree	
1057	2547 Kevin	8" Pecan	Private tree, will not be impacted	
1058	2551 Kevin	36" Live Oak	Private tree	Fence, Bore waterline
1059	2551 Kevin	14" Live Oak	Private tree	Root prune for fire hydrant, Fence, Bore waterline
1060	10302 Westray	18" Tallow	Not ordinance tree	
1061	10302 Westray	10" Tallow	Not ordinance tree	
1062	10302 Westray	18" Tallow	Not ordinance tree	
1063	10303 Westray	29" Pin	Ordinance tree	Fence, Bore waterline
1064	10303 Westray	18" Pine	Ordinance tree	Fence, Bore waterline
1065	10303 Westray	18" Pine	Ordinance tree	Fence, Bore waterline
1066	10303 Westray	17" Pine	Ordinance tree	Fence, Bore waterline
1067	10303 Westray	2" Loquat	Not ordinance tree	
1068	2574 Kevin	8" Arborvitae	Not ordinance tree	
1069	2574 Kevin	8" Arborvitae	Not ordinance tree	
1070	2574 Kevin	25" Water Oak	Private tree, will not be impacted	
1071	2522 Kevin	20" Arizona Ash	Private tree	Root prune for bend, Fence, Bore waterline
1072	2522 Kevin	15" Silver Maple	90% dieback, Not ordinance tree	
1073	2515 Riata	13" Tallow	Private tree, will not be impacted	
1074	2511 Kevin	2" Crepe Myrtle	Not ordinance tree	
1075	2511 Kevin	22" Shumard Oak	Ordinance tree	Root prune for lead
1076	2503 Kevin	35" Live Oak	Private tree	Root prune for lead

TREE PRESERVATION PLAN LEGEND

- 1 — TREE NUMBER/LOCATION
- (1) — TREE TO BE REMOVED
- -X-X- — TREE PROTECTION FENCE
- ---- — ROOT PRUNING TRENCH
- (⊙) — REPLACEMENT PLANTING SPECIES AND SIZE/TYPE

NOTE:
THIS TREE PROTECTION PLAN WAS DEVELOPED WITH INFORMATION PROVIDED BY DESIGN ENGINEER IN DRAWINGS DATED JANUARY 2013. THE PLAN CONSIDERS ALL FITTINGS, VERTICAL OFFSETS AND AREAS OF NECESSARY EXCAVATION. CHANGES MADE TO DESIGN MAY COMPROMISE THE TREE PROTECTION PLAN. REFER TO SPECIFICATIONS 01562 AND 02915. CONDITION OF EACH TREE IS BASED ON VISUAL EVALUATION AT TIME OF DESIGN. CONDITION AND STRUCTURAL INTEGRITY OF EACH TREE IS NOT GUARANTEED BY DESIGNER AT ANY POINT IN THE FUTURE, AS ENVIRONMENTAL AND MAINTENANCE INFLUENCES ON EACH TREE CAN NOT BE DETERMINED BY DESIGNER.

S&B INFRASTRUCTURE, LTD.

DESIGN ENGINEER NAME:
ADDRESS:
TELEPHONE: 713-845-5401
TX FIRM NUMBER: F-1582
SURVEYED BY: AMANI ENG. INC.
FB No. P-5648

C.N. Koehl
Urban Forestry, Inc.
210 Stone Bush Ct. • Katy, Texas 77493
281-391-0022 cknoehl@koehlurbanforestry.com
APPROVED: Craig N Koehl 01-21-2013

CITY OF HOUSTON
DEPARTMENT OF PUBLIC WORKS AND ENGINEERING

WATER LINE REPLACEMENT
IN SPRING SHADOWS WEST AREA

TREE PROTECTION PLAN
SHEET 17 OF 20

WBS NUMBER
S-000035-0129-3

DRAWING SCALE
1"=40'

CITY OF HOUSTON PM
JOHN MSIGWA, P.E.

SHEET NO. 142 OF 155

50308

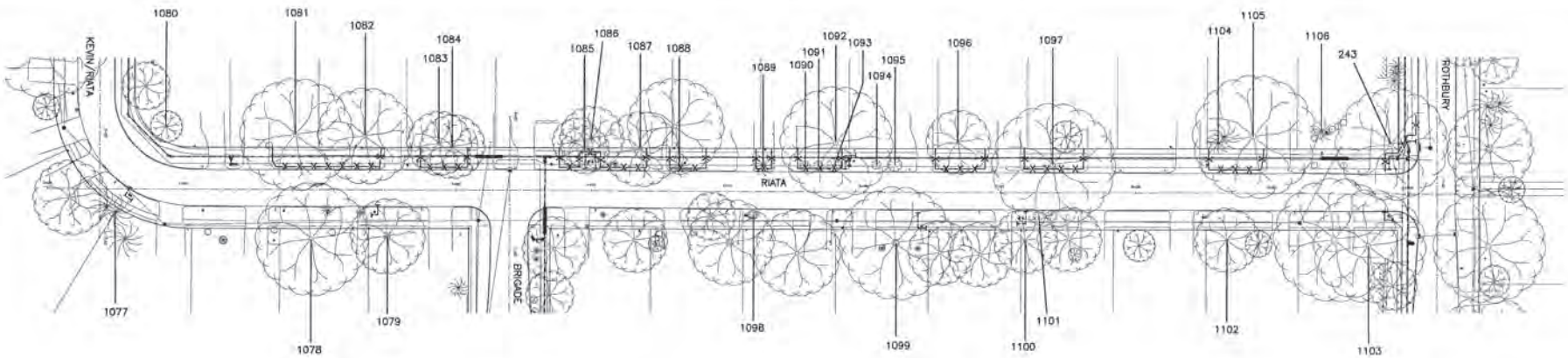

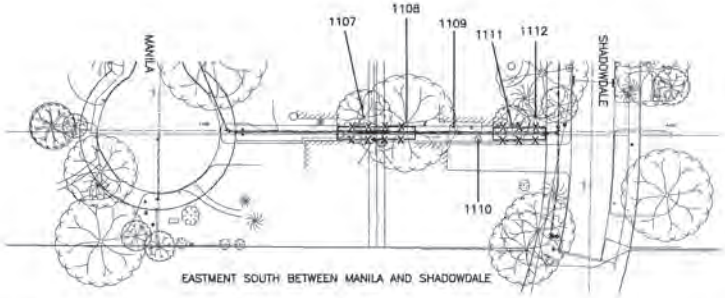

EASTMENT SOUTH BETWEEN MANILA AND SHADOWDALE

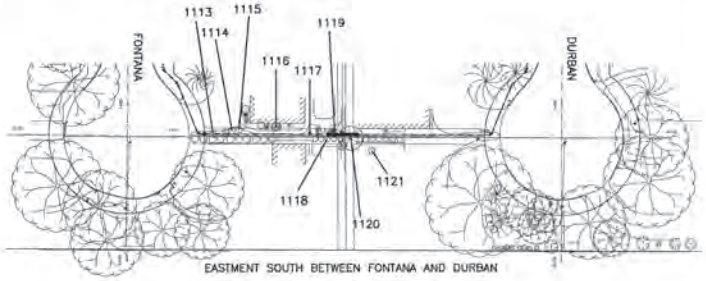

EASTMENT SOUTH BETWEEN FONTANA AND DURBAN

TREE PRESERVATION PLAN LEGEND

- TREE NUMBER/LOCATION
- TREE TO BE REMOVED
- TREE PROTECTION FENCE
- ROOT PRUNING TRENCH
- REPLACEMENT PLANTING SPECIES AND SIZE/TYPE

Tree No. Location	Description	Comments	Treatment
Trees on Riata			
1077 2514 Riata	18" Pine	Private tree	Root prune for lead
1078 2522 Riata	31" Sweetgum	Private tree, will not be impacted	
1079 2526 Riata	28" Sweetgum	Private tree	Root prune for lead
1080 2515 Riata	10" Magnolia	Private tree, will not be impacted	
1081 2519 Riata	28" Live Oak	Private tree	Fence, Bore waterline
1082 2523 Riata	30" Arizona Ash	Private tree	Fence, Bore waterline
1083 2527 Riata	18" Cedar Elm	Private tree	Fence, Bore waterline
1084 2527 Riata	20" Cedar Elm	Private tree	Fence, Bore waterline
1085 2535 Riata	15" Lacebark Elm	Ordinance tree	Root prune for tap & lead, Fence, Bore waterline
1086 2535 Riata	22" Lacebark Elm	Private tree	Root prune for tap & lead, Fence, Bore waterline
1087 2535 Riata	21" Lacebark Elm	Ordinance tree	Fence, Bore waterline
1088 2539 Riata	15" Pine	Ordinance tree	Hand dig tap & lead, Fence, Bore waterline
1089 2547 Riata	14" Pine	Ordinance tree	Fence, Bore waterline
1090 2547 Riata	5" Crepe Myrtle	Not ordinance tree	
1091 2547 Riata	4" Crepe Myrtle	Not ordinance tree	
1092 2547 Riata	8" Crepe Myrtle	Not ordinance tree	
1093 2547 Riata	26" Arizona Ash	Private tree	Root prune for tap & lead, Fence, Bore waterline
1094 2551 Riata	5" Crepe Myrtle	Not ordinance tree	
1095 2551 Riata	10" Crepe Myrtle	Not ordinance tree	
1096 2555 Riata	15" Shumard Oak	Private tree	Fence, Bore waterline
1097 2555 Riata	32" Water Oak	Private tree	Fence, Bore waterline
1098 2542 Riata	10" Crepe Myrtle	Not ordinance tree	
1099 2546 Riata	35" Live Oak	Private tree	Root prune for lead
1100 2554 Riata	20" Live Oak	Private tree	Root prune for lead
1101 2554 Riata	10" Crepe Myrtle	Not ordinance tree	
1102 2562 Riata	24" Willow Oak	Private tree, will not be impacted	
1103 2566 Riata	33" Live Oak	Private tree	Root prune for fire hydrant salvage
1104 2563 Riata	12" Pine	Private tree	Fence, Bore waterline
1105 2563 Riata	28" Live Oak	Private tree	Fence, Bore waterline
1106 2567 Riata	8' Palm	Private tree, will not be impacted	

Tree No. Location	Description	Comments	Treatment
Trees in Manila/Shadowdale Easement			
1107 2606 Manila	29" Green Ash	Private tree	Fence, Bore waterline
1108 2607 Shadowdale	30" Water oak	Private tree	Fence, Bore waterline
1109 2607 Shadowdale	6" Crepe Myrtle	Private tree, will not be impacted	
1110 2603 Shadowdale	4" Crepe Myrtle	Easement tree	
1111 2607 Shadowdale	12" Photinia	Private tree, will not be impacted	
1112 2607 Shadowdale	19" Pine	Private tree	Fence, Bore waterline
Trees in Fontana/Durban Easement			
1113 2606 Fontana	9" Crepe Myrtle	Easement tree	
1114 2606 Fontana	5" Crepe Myrtle	Easement tree	
1115 2606 Fontana	5" Crepe Myrtle	Easement tree	
1116 2606 Fontana	1' Palm	Easement tree	
1117 2606 Fontana	6" Yaupon	Easement tree	
1118 2602 Fontana	4" Crepe Myrtle	Easement tree	
1119 2606 Fontana	4" Oleander	Easement tree	
1120 2603 Durban	5" Citrus	Easement tree	
1121 2603 Durban	4" Crepe Myrtle	Private tree, will not be impacted	

NOTE:
THIS TREE PROTECTION PLAN WAS DEVELOPED WITH INFORMATION PROVIDED BY DESIGN ENGINEER IN DRAWINGS DATED JANUARY 2013. THE PLAN CONSIDERS ALL FITTINGS, VERTICAL OFFSETS AND AREAS OF NECESSARY EXCAVATION. CHANGES MADE TO DESIGN MAY COMPROMISE THE TREE PROTECTION PLAN. REFER TO SPECIFICATIONS 01562 AND 02915. CONDITION OF EACH TREE IS BASED ON VISUAL EVALUATION AT TIME OF DESIGN. CONDITION AND STRUCTURAL INTEGRITY OF EACH TREE IS NOT GUARANTEED BY DESIGNER AT ANY POINT IN THE FUTURE, AS ENVIRONMENTAL AND MAINTENANCE INFLUENCES ON EACH TREE CAN NOT BE DETERMINED BY DESIGNER.

S&B INFRASTRUCTURE, LTD.
Texas PE Firm Registration Number F-1582

DESIGN ENGINEER NAME:
ADDRESS:
TELEPHONE: 713-845-5401
TX FIRM NUMBER: F-1582
SURVEYED BY: ANANI ENG. INC.
PE No. P-5646

C.N. Koehl
Urban Forestry, Inc.
210 Stone Bush Ct. • Katy, Texas 77493
281-391-0022 cknoehl@koehlurbanforestry.com
APPROVED: Craig N. Koehl 01-21-2013

CITY OF HOUSTON
DEPARTMENT OF PUBLIC WORKS AND ENGINEERING

WATER LINE REPLACEMENT
IN SPRING SHADOWS WEST AREA

TREE PROTECTION PLAN
SHEET 18 OF 20

WBS NUMBER
S-000035-0129-3

DRAWING SCALE
1"=40'

CITY OF HOUSTON PM
JOHN MSIGWA, P.E.

SHEET NO. 143 OF 155

DATE: Jan 21, 2013-3:36pm USERNAME: web PLOTNAME: 142-SB Spring Shadows Reel 17-18.dwg

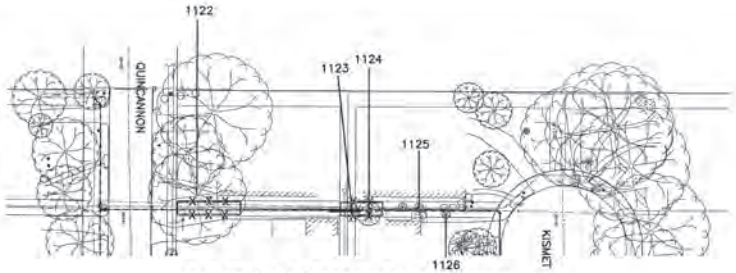

EASEMENT NORTH BETWEEN QUINCANNON AND KISMET

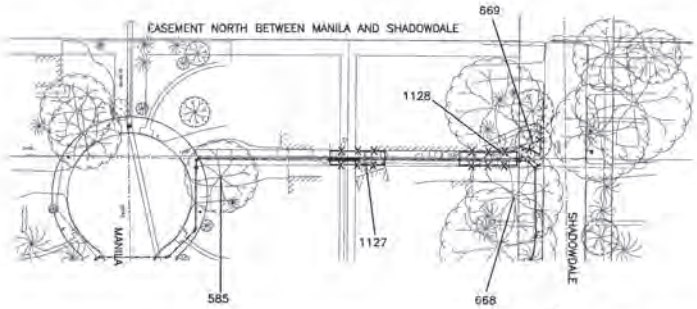

EASEMENT NORTH BETWEEN MANILA AND SHADOWDALE

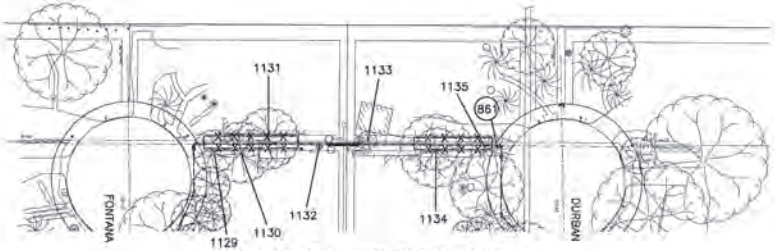

EASEMENT NORTH BETWEEN FONTANA AND DURBAN

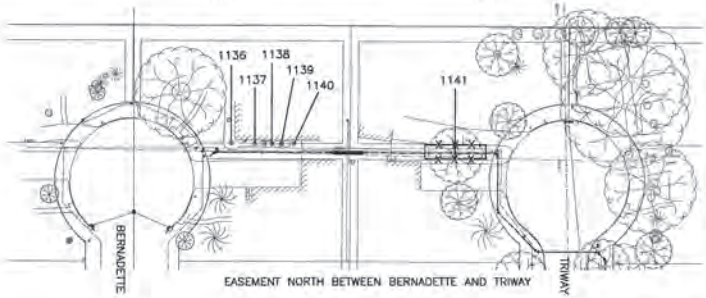

EASEMENT NORTH BETWEEN BERNADETTE AND TRIWAY

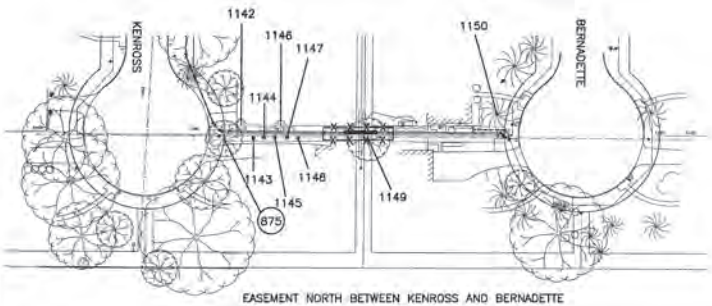

EASEMENT NORTH BETWEEN KENROSS AND BERNADETTE

Tree No. Location	Description	Comments	Treatment
Trees in Quincannon/Kismet Easement			
1122 2834 Quincannon	27" Willow Oak	Private tree	Fence, Bore waterline
1123 2831 Kismet	12" Crepe Myrtle	Easement tree	
1124 2831 Kismet	12" Live Oak	Private tree	Fence, Bore waterline
1125 2835 Kismet	2" Citrus	Easement tree	
1126 2831 Kismet	3" Crepe Myrtle	Easement tree	
Trees in Manila/Shadowdale North Easement			
1127 2831 Shadowdale	18" Cedar	Private tree	Fence, Bore waterline
1128 2831 Shadowdale	20" Pine	Private tree	Fence, Bore waterline
Trees in Fontana/Durban North Easement			
1129 2830 Fontana	16" Water Oak	Private tree	Fence, Bore waterline
1130 2830 Fontana	18" Willow Oak	Private tree	Fence, Bore waterline
1131 2830 Fontana	16" Sugarberry	Private tree	Fence, Bore waterline
1132 2830 Fontana	2" Magnolia	Easement tree	
1133 2835 Durban	4" Sugarberry	Easement tree	
1134 2831 Durban	14" Sycamore	Private tree	Fence, Bore waterline
1135 2835 Durban	18" Cedar	Private tree	Fence, Bore waterline
Trees in Bernadette/Triway North Easement			
1138 2834 Bernadette	4" Crepe Myrtle	Private tree, will not be impacted	
1137 2834 Bernadette	5" Crepe Myrtle	Private tree, will not be impacted	
1138 2834 Bernadette	5" Crepe Myrtle	Private tree, will not be impacted	
1139 2834 Bernadette	4" Crepe Myrtle	Private tree, will not be impacted	
1140 2834 Bernadette	3" Crepe Myrtle	Private tree, will not be impacted	
1141 2831 Triway	27" Pear	Private tree	Fence, Bore waterline
Trees in Kenross/Bernadette North Easement			
1142 2706 Kenross	14" Redbud	Easement tree	
1143 2702 Kenross	1" Crepe Myrtle	Easement tree	
1144 2702 Kenross	2" Crepe Myrtle	Easement tree	
1145 2702 Kenross	3" Kenross	Easement tree	
1146 2702 Kenross	3" Crepe Myrtle	Easement tree	
1147 2702 Kenross	2" Crepe Myrtle	Easement tree	
1148 2706 Kenross	2" Crepe Myrtle	Easement tree	
1149 2703 Kenross	15" Water Oak	Private tree	Fence, Bore waterline
1150 2707 Bernadette	20" Pine	Private tree	Root prune for waterline

TREE PRESERVATION PLAN LEGEND

- TREE NUMBER/LOCATION
- TREE TO BE REMOVED
- TREE PROTECTION FENCE
- ROOT PRUNING TRENCH
- REPLACEMENT PLANTING SPECIES AND SIZE/TYPE

NOTE:
THIS TREE PROTECTION PLAN WAS DEVELOPED WITH INFORMATION PROVIDED BY DESIGN ENGINEER IN DRAWINGS DATED JANUARY 2013. THE PLAN CONSIDERS ALL FITTINGS, VERTICAL OFFSETS AND AREAS OF NECESSARY EXCAVATION. CHANGES MADE TO DESIGN MAY COMPROMISE THE TREE PROTECTION PLAN. REFER TO SPECIFICATIONS 01562 AND 02915. CONDITION OF EACH TREE IS BASED ON VISUAL EVALUATION AT TIME OF DESIGN. CONDITION AND STRUCTURAL INTEGRITY OF EACH TREE IS NOT GUARANTEED BY DESIGNER AT ANY POINT IN THE FUTURE, AS ENVIRONMENTAL AND MAINTENANCE INFLUENCES ON EACH TREE CAN NOT BE DETERMINED BY DESIGNER.

S&B INFRASTRUCTURE, LTD.
Texas PE Firm Registration Number: F-1582

DESIGN ENGINEER NAME:
ADDRESS:
TELEPHONE: 713-845-5401
TX FIRM NUMBER: F-1582
SURVEYED BY: AMANI ENG. INC.
FB No. F-3648

C.N. Koehl
Urban Forestry, Inc.
210 Stone Bush Ct. • Katy, Texas 77493
281-391-6027 ckoehl@urbanforestry.com
APPROVED: Craig A. Koehl 01-21-2013

CITY OF HOUSTON
DEPARTMENT OF PUBLIC WORKS AND ENGINEERING

WATER LINE REPLACEMENT
IN SPRING SHADOWS WEST AREA

TREE PROTECTION PLAN
SHEET 19 OF 20

WBS NUMBER
S-000035-0129-3

DRAWING SCALE
1"=40'

CITY OF HOUSTON PM
JOHN MSIGWA, P.E.

SHEET NO. 144 OF 155

50908
HOUSTON, TEXAS

Tree Removal List

Tree No.	Location	Description	Replacement requirement
35	2802 Fontana	4" Crepe Myrtle	0
36	2802 Fontana	2" Crepe Myrtle	0
258	2503 Rothbury	1' Sago	0
259	2503 Rothbury	2' Sago	0
346	2734 Quincannon	6" Redbud	0
397	2835 Quincannon	5" Crepe Myrtle	0
400	2835 Quincannon	7" Crepe Myrtle	0
401	2835 Quincannon	12" Tallow	0
625	2727 Shadowdale	14" Pine	0
672	2802 Fontana	4" Ligustrum	0
673	2802 Fontana	4" Ligustrum	0
724	2734 Fontana	3' Sago	0
747	2802 Fontana	3' Sago	0
842	2802 Durban	15" Water Oak	15
861	2835 Durban	15" Pine	0
872	2826 Durban	2" Mexican Sage	0
875	2706 Kenross	7" Sweetgum	0
965	2826 Triway	15" Water Oak	15
		TOTAL REPLACEMENT INCHES REQUIRE	**30**

Tree Replacement List

Quantity	Caliper Size	Species	Container/Tree Spade size
3	4	Polymorpha Oak (*Quercus polymorpha*)	100 gallon container
3	4	Nuttal Oak (*Quercus nuttallii*)	100 gallon container
2	3	Cedar Elm (*Ulmus crassifolia*)	65 gallon

NOTE: Tree replacement locations shown on plans must be coordinated with adjacent property owner and City of Houston Urban Forestry prior to excavation for planting. Coordination shall be completed by construction contractor's Certified Arborist. Trees to be maintained and watered for 2 years following planting per standard spec 02915. Timing of planting may be delayed in periods of drought with mandatory water restrictions in place–timing to be coordinated with City of Houston Urban Forestry. Trees in esplande groupings to be planted in common bed with 4" of hardwood mulch between trees.

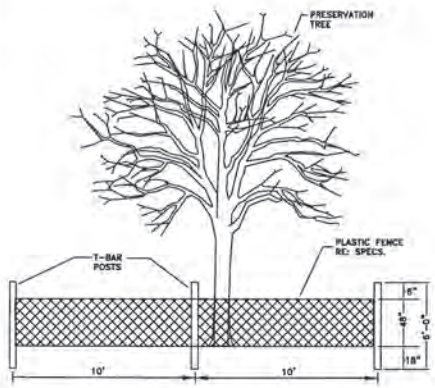

TREE PROTECTION FENCING DETAIL A
NOT TO SCALE

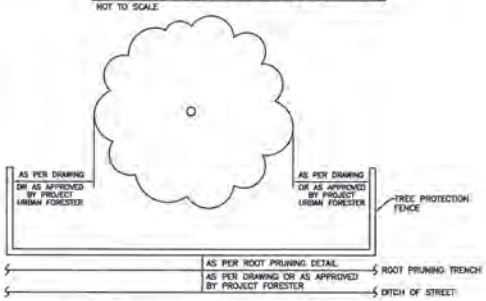

TREE PROTECTION FENCING DETAIL B
NOT TO SCALE

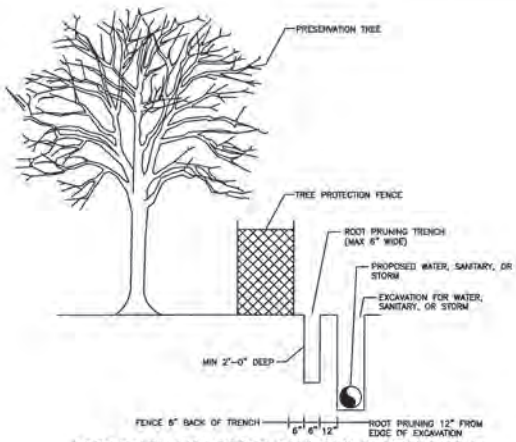

ROOT PRUNE FOR WATER, SANITARY, OR STORM LINE
NOT TO SCALE

S&B INFRASTRUCTURE, LTD.
Texas PE Firm Registration Number F-1582

DESIGN ENGINEER NAME:
ADDRESS:
TELEPHONE: 713-845-5401
TX FIRM NUMBER: F-1582
SURVEYED BY: AMANI ENG. INC.
FB No. P-5648

C.N. Koehl
Urban Forestry, Inc.
210 Stone Bush Ct. • Katy, Texas 77493
281-391-0022 ckoehl@koehlurbanforestry.com
APPROVED: Craig N. Koehl 01-21-2013

CITY OF HOUSTON
DEPARTMENT OF PUBLIC WORKS AND ENGINEERING

WATER LINE REPLACEMENT
IN SPRING SHADOWS WEST AREA

TREE PROTECTION PLAN
SHEET 20 OF 20

WBS NUMBER
S-000035-0129-3

DRAWING SCALE
1"=40'

CITY OF HOUSTON PM
JOHN MSIGWA, P.E.

SHEET NO. 145 OF 155

50308
HOUSTON, TEXAS