CITY OF HOUSTON
DEPARTMENT OF PUBLIC WORKS AND ENGINEERING
ENGINEERING AND CONSTRUCTION

PROJECT MANUAL

Proposed 42-inch Water Line Along Sandpiper Dr., Ludington Dr., Pembridge Dr. and W. Bellfort, From W. Airport Blvd to Braes Forest Dr.

WBS No. S-000900-0111-4

VOLUME 1 of 1

Divisions 00 through 16

March 2013

4/8/13
STATE OF TEXAS
ALISA GRUBER
95685
LICENSED PROFESSIONAL ENGINEER

Lockwood, Andrews and Newnam, Inc.
2925 Briarpark Drive, Suite 400
Houston, Texas 77042
(713) 266-6900
Texas Firm Registration No. F-2614

Document 00010

TABLE OF CONTENTS

NOTE: Bold capitalized Specification Sections are included in the City of Houston Department of Public Works and Engineering Standard Construction Specifications for Wastewater Collection Systems, Water Lines, Storm Drainage, Street Paving, and Traffic located here: **http://documents.publicworks.houstontx.gov/document-center/cat_view/88-engineering-and-construction/92-specifications/208-division-02-16-standard-specifications.html**; and are incorporated in Project Manuals by reference as if copied verbatim. Documents listed "for filing" are to be provided by Bidder and are not included in this Project Manual unless indicated for example only. The Document numbers and titles hold places for actual documents to be submitted by Contractor during Bid, post-bid, or construction phase of the Project. Specification Sections marked with an asterisk (*) are amended by a supplemental specification, printed on blue paper and placed in front of the Specification it amends. Documents in the 200, 300 and 400 series of Division 00, except for Document 00410B – Bid Form, Part B, are not part of the Contract.

Doc. No.	Document Title	Doc. Date
	INTRODUCTORY INFORMATION	
00010	Table of Contents	03-18-2013
00015	List of Drawings	03-18-2013
	BIDDING REQUIREMENTS	
	INSTRUCTIONS TO BIDDERS	
00200	Instructions to Bidders	08-18-2006
00210	Supplementary Instructions to Bidders	09-20-2012
00220	Request for Bid Information	06-11-2004
00251	Prebid Meeting Agenda	07-23-2012
	INFORMATION AVAILABLE TO BIDDERS	
00320	Geotechnical Information	09-02-2005
00340	Environmental Information	09-14-2005
	BID FORMS AND SUPPLEMENTS	
00410	Bid Form, Parts A & B	04-05-2013
00430	Bidder's Bond (For filing; Example Form)	02-01-2004

Doc. No.	Document Title	Doc. Date
00450	Bidder's Statement of MWBE/PDBE/DBE/SBE Status	03-09-2007
00452	Contractor Submission List - Fair Campaign Ordinance	04-30-2004
00453	Bidder's Statement of Residency	02-01-2004
00454	Affidavit of Non-interest	02-01-2004
00455	Affidavit of Ownership or Control	09-04-2007
00457	Conflict of Interest Questionnaire……	02-28-2006
00459	Contractor's Statement Regarding Previous Contracts Subject to EEO	02-01-2004
00460	(POP-1) Pay or Play Acknowledgement Form	07-03-2012
POST-BID PROCEDURES		
00495	Post-bid Procedures	05-01-2012

CONTRACTING REQUIREMENTS

AGREEMENT		
00501	Resolution of Contractor	02-01-2010
00520	Agreement	02-01-2013
BONDS AND CERTIFICATES		
00600	List of Proposed Subcontractors and Suppliers, Parts A & B	03-09-2007
00601	Drug Policy Compliance Agreement	02-01-2004
00602	Contractor's Drug Free Workplace Policy (For filing)	
00603	Checklist for Drug Policy Submittal	02-09-2012
00604	History of OSHA Actions and List of On-the-job Injuries	02-01-2004
00605	List of Safety Impact Positions	02-01-2004
00606	Contractor's Certification of No Safety Impact Positions	02-01-2004
00610	Performance Bond	05-17-2005
00611	Statutory Payment Bond	05-17-2005
00612	One-year Maintenance Bond	05-17-2005
00613	One-year Surface Correction Bond	05-17-2005
00620	Affidavit of Insurance (with attached Certificates of Insurance)	02-01-2004
00622	Name and Qualifications of Proposed Superintendent (For filing)	
00624	Affidavit of Compliance with Affirmative Action Program	02-01-2004
00630	(POP-2) Certification of Compliance with Pay or Play Program	07-03-2012
00631	(POP-3) City of Houston Pay or Play Program – List of Subcontractors ……..	07-03-2012
00633	Certification by Proposed material Suppliers, Lessors, and Professional Service Providers Regarding Equal Employment Opportunity	02-01-2010
00642	Monthly Subcontractor Payment Reporting Form	02-01-2010

Doc. No.	Document Title	Doc. Date
00646	Payment Notification Explanation of Withholding	02-01-2010
GENERAL CONDITIONS		
00700	General Conditions	11-01-2011
SUPPLEMENTARY CONDITIONS		
00800	Supplementary Conditions	11-01-2011
00805	Equal Employment Opportunity Requirements	05-01-2012
00808	Minority and Women-owned Business Enterprise (MWBE), Persons with Disabilities Business Enterprise (PDBE) Program or Small Business Enterprise (SBE)	05-01-2012
00820	Wage Scale for Engineering Construction	02-01-2013
00830	Trench Safety Geotechnical Information	02-01-2004
00840	Pay or Play Program Requirements	07-03-2012
ADDENDA AND MODIFICATIONS		
00931	Request for Information (Example only)	02-01-2004

SPECIFICATIONS

DIVISION 1 - GENERAL REQUIREMENTS

01110	Summary of Work	04-05-2013
01145	Use of Premises	01-01-2011
01255	Change Order Procedures	08-01-2003
01270S	*Measurement and Payment*	*04-05-2013*
*01270	Measurement and Payment	08-01-2003
01292	Schedule of Values	08-01-2003
01312	Coordination and Meetings	08-01-2003
01321	Construction Photographs	08-01-2003
01326	Construction Schedule (Bar Chart)	08-01-2003
01330	Submittal Procedures	08-01-2003
01340	Shop Drawings, Product Data, and Samples	08-01-2003
01410	TPDES Requirements (with Attachments)	02-01-2011
01422	Reference Standards	08-01-2003
01450	Contractor's Quality Control	08-01-2003
01452(LD)	Inspection Services	07-31-1999
01454S	*Testing Laboratory Services*	*10-27-2004*
*01454	Testing Laboratory Services	08-01-2003
01502	Mobilization	08-01-2008
01504	Temporary Facilities and Controls	01-01-2011
01506	Diversion Pumping	08-01-2003

Doc. No.	Document Title	Doc. Date
01520	Temporary Field Office	02-08-2012
01554	Traffic Control and Street Signs	07-01-2012
01555	Traffic Control and Regulation	01-01-2011
01562	Tree and Plant Protection	01-01-2011
01570	Storm Water Pollution Control	01-26-2012
01575	Stabilized Construction Access	02-01-2011
01576	Waste Material Disposal	08-01-2003
01578	Control of Ground and Surface Water	01-01-2011
01580	Project Identification Signs	08-01-2003
01581	Excavation in Public Way Permit Signs	08-01-2003
01610	Basic Product Requirements	01-01-2011
01630	Product Substitution Procedures	08-01-2003
01725	Field Surveying	01-01-2011
01731	Cutting and Patching	01-01-2011
01732	Procedure for Water Valve Assistance (with Attachments)	08-01-2003
01740	Site Restoration	08-01-2003
01755	Starting Systems	08-01-2003
01770	Closeout Procedures	08-01-2003
01782(LD)	Operations and Maintenance Personnel Instruction	08-01-1995
01785	Project Record Documents	08-01-2003

DIVISION 2 - SITE WORK

02081	**CAST-IN-PLACE CONCRETE MANHOLES**	**01-01-2011**
02082	**PRECAST CONCRETE MANHOLES**	**01-01-2011**
02083	**FIBERGLASS MANHOLES**	**01-01-2011**
02084	**FRAMES, GRATES, RINGS, AND COVERS**	**08-01-2008**
02085	**VALVE BOXES, METER BOXES, AND METER VAULTS**	**01-01-2011**
02086	**ADJUSTING MANHOLES, INLETS, AND VALVE BOXES TO GRADE**	**01-01-2011**
02087	**BRICK MANHOLE FOR STORM SEWERS**	**10-01-2002**
02221S	*Removing Existing Pavements, Structures, Wood And Demolition Debris*	*10-24-2012*
***02221**	**REMOVING EXISTING PAVEMENTS,STRUCTURES, WOOD AND DEMOLITION DEBRIS**	**07-01-2009**
02222	**ABANDONMENT OF SEWERS**	**01-01-2011**
02233	**CLEARING AND GRUBBING**	**01-01-2011**
02260	**TRENCH SAFETY SYSTEM**	**02-01-2011**
02315	**ROADWAY EXCAVATION**	**07-01-2009**
02316	**EXCAVATION AND BACKFILL FOR STRUCTURES**	**01-01-2011**
02317	**EXCAVATION AND BACKFILL FOR UTILITIES**	**01-01-2011**
02318	**EXTRA UNIT PRICE WORK FOR EXCAVATION**	

Doc. No.	Document Title	Doc. Date
	AND BACKFILL	**01-01-2011**
02319	**BORROW**	**01-01-2011**
02320	**UTILITY BACKFILL MATERIALS**	**01-01-2011**
02321	**CEMENT STABILIZED SAND**	**01-01-2011**
02330	**EMBANKMENT**	**10-01-2002**
02336	**LIME-STABILIZED SUBGRADE**	**10-01-2002**
02337	**LIME/FLY-ASH STABILIZED SUBGRADE**	**10-01-2002**
02338	**PORTLAND CEMENT STABILIZED SUBGRADE**	**10-01-2002**
02371(LD)	*Erosion Control and Vegetation Mat*	*10-15-1995*
02400	**TUNNEL SHAFTS**	**01-01-2011**
02425(LD)	*Tunnel Excavation and Primary Liner*	*07-01-2002*
02426	**SEWER LINE IN TUNNELS**	**10-01-2002**
02427	**PLASTIC LINER FOR LARGE-DIAMETER CONCRETE SEWERS AND STRUCTURES**	**10-01-2002**
02431	**TUNNEL GROUT**	**10-01-2002**
02441	**MICROTUNNELING AND PIPE-JACKED TUNNELS**	**01-01-2011**
02447	**AUGERING PIPE AND CONDUIT**	**10-01-2002**
02448	**PIPE AND CASING AUGERING FOR SEWERS**	**10-01-2002**
02465	**DRILLED SHAFT FOUNDATIONS**	**10-01-2002**
02476	**CAISSON FOR LIFT STATION**	**01-01-2011**
02501	**DUCTILE IRON PIPE AND FITTINGS**	**02-01-2011**
02502	**STEEL PIPE AND FITTINGS**	**01-01-2011**
02503	**COPPER TUBING**	**10-01-2002**
02504	**FIBERGLASS REINFORCED PIPE**	**02-01-2011**
02505	**HIGH DENSITY POLYETHYLENE (HDPE) SOLID AND PROFILE WALL PIPE**	**02-01-2011**
02506	**POLYVINYL CHLORIDE PIPE**	**01-01-2011**
02507	**PRESTRESSED CONCRETE CYLINDER PIPE**	**01-01-2011**
02508	**EXTRA STRENGTH CLAY PIPE**	**02-01-2011**
02509	**FIBERGLASS REINFORCED PIPE FOR PRESSURE MAINS**	**01-01-2011**
02511S	*Water Lines*	*10-24-2012*
***02511**	**WATER LINES**	**01-01-2011**
02512	**WATER TAP AND SERVICE LINE INSTALLATION**	**04-27-2012**
02513S	*Wet Connections*	*10-24-2012*
***02513**	**WET CONNECTIONS**	**10-01-2002**
02514S	*Disinfection of Water Lines*	*04-05-2013*
***02514**	**DISINFECTION OF WATER LINES**	**01-01-2011**
02515S	*Hydrostatic Testing of Pipelines*	*04-05-2013*
***02515**	**HYDROSTATIC TESTING OF PIPELINES**	**01-01-2011**
02516	**CUT, PLUG, AND ABANDONMENT OF WATER LINES**	**01-01-2011**
02517	**WATER LINE IN TUNNELS**	**10-01-2002**

Doc. No.	Document Title	Doc. Date
02518S	*Steel Pipe and Fittings for Large Diameter Water Lines*	*04-05-2013*
***02518**	**STEEL PIPE AND FITTINGS FOR LARGE-DIAMETER WATER LINES**	**01-01-2011**
02520	**FIRE HYDRANTS**	**05-05-2011**
02521	**GATE VALVES**	**01-01-2011**
02522	**BUTTERFLY VALVES**	**01-01-2011**
02523	**PRESSURE REDUCING VALVES**	**10-01-2002**
02524	**AIR RELEASE AND VACUUM RELIEF VALVES**	**01-01-2011**
02525S	*Tapping Sleeves and Valves*	*10-24-2012*
***02525**	**TAPPING SLEEVES AND VALVES**	**01-01-2011**
02526	**WATER METERS**	**01-01-2011**
02527	**POLYURETHANE COATINGS ON STEEL OR DUCTILE IRON PIPE**	**10-01-2002**
02528	**POLYETHYLENE WRAP**	**01-01-2011**
02531	**GRAVITY SANITARY SEWERS**	**01-01-2011**
02532	**SANITARY SEWER FORCE MAINS**	**01-01-2011**
02533	**ACCEPTANCE TESTING FOR SANITARY SEWERS**	**01-01-2011**
02534	**SANITARY SEWER SERVICE STUBS OR RECONNECTIONS**	**01-01-2011**
02553	**POINT REPAIR AND OBSTRUCTION REMOVALS**	**01-01-2011**
02555	**MANHOLE REHABILITATION**	**01-01-2011**
02581	**STREET LIGHTING CONDUIT**	**10-01-2002**
02582	**TRAFFIC SIGNAL POLE ASSEMBLIES**	**07-01-2009**
02611	**REINFORCED CONCRETE PIPE**	**02-01-2011**
02612	**PRECAST REINFORCED CONCRETE BOX SEWERS**	**10-01-2002**
02613	**BAR WRAPPED STEEL CYLINDER PIPE**	**01-01-2011**
02621	**GEOTEXTILE**	**10-01-2002**
02631	**STORM SEWERS**	**01-26-2012**
02632	**CAST-IN-PLACE INLETS, HEADWALLS, AND WINGWALLS**	**10-01-2002**
02633	**PRECAST CONCRETE INLETS, HEADWALLS, AND WINGWALLS**	**10-01-2002**
02642	**CORRUGATED METAL PIPE**	**10-01-2002**
02643	**PLATE CULVERT STRUCTURES**	**10-01-2002**
02711	**HOT MIX ASPHALT BASE COURSE**	**07-01-2009**
02712	**CEMENT STABILIZED BASE COURSE**	**10-01-2002**
02713S	*Recycled Crushed Concrete Base Course*	*10-08-2009*
***02713**	**RECYCLED CRUSHED CONCRETE BASE COURSE**	**07-01-2009**
02714	**FLEXIBLE BASE COURSE FOR TEMPORARY DRIVEWAYS**	**07-01-2009**
02716(LD)	*Cement Stabilized Sand*	*10-06-1997*
***02741**	**ASPHALTIC CONCRETE PAVEMENT**	**07-01-2009**
02742	**PRIME COAT**	**10-01-2002**

Doc. No.	Document Title	Doc. Date
02743	**TACK COAT**	**10-01-2002**
02751S	*Concrete Paving*	*04-05-2013*
***02751**	**CONCRETE PAVING**	**07-01-2009**
02752S	*Concrete Pavement Joints*	*04-05-2013*
***02752**	**CONCRETE PAVEMENT JOINTS**	**10-01-2002**
02753	**CONCRETE PAVEMENT CURING**	**10-01-2002**
02754	**CONCRETE DRIVEWAYS**	**09-01-2002**
02761	**COLORED CONCRETE FOR MEDIANS AND SIDEWALKS**	**09-01-2002**
02762S	*Blast Cleaning of Pavement*	*10-27-2004*
***02762**	**BLAST CLEANING OF PAVEMENT**	**10-01-2002**
02764	**RAISED PAVEMENT MARKERS**	**07-01-2012**
02765	**TEMPORARY AND REMOVABLE REFLECTORIZED PAVEMENT MARKINGS**	**07-01-2012**
02767	**THERMOPLASTIC PAVEMENT MARKINGS**	**07-01-2012**
02771	**CURB, CURB AND GUTTER, AND HEADERS**	**10-01-2002**
02772	**CONCRETE MEDIANS AND DIRECTIONAL ISLANDS**	**10-01-2002**
02775	**CONCRETE SIDEWALKS**	**10-01-2002**
02811	**LANDSCAPE IRRIGATION**	**10-01-2002**
02893	**TRAFFIC SIGNAL CONSTRUCTION**	**07-01-2009**
02911	**TOPSOIL**	**10-01-2002**
02912	**TREE, PLANT, AND HARDSCAPE PROTECTION**	**07-01-2009**
02915	**TREE PLANTING**	**01-01-2011**
02921	**HYDROMULCH SEEDING**	**01-01-2011**
02922	**SODDING**	**07-01-2009**
02951S	*Pavement Repair and Restoration*	*04-05-2013*
***02951**	**PAVEMENT REPAIR AND RESTORATION**	**07-01-2009**
02960	**MILLING PAVEMENT**	**07-01-2009**
DIVISION 3 - CONCRETE		
03315	**CONCRETE FOR UTILITY CONSTRUCTION**	**10-01-2002**
DIVISION 4 - MORTAR		
04061	**MORTAR**	**10-01-2002**
04210	**BRICK MASONRY FOR UTILITY CONSTRUCTION**	**10-01-2002**
DIVISION 5 - METALS		
05501	**METAL FABRICATIONS**	**01-01-2011**

Doc. No.	Document Title	Doc. Date
DIVISION 15 – MECHANICAL		
15640	**JOINT BONDING AND ELECTRICAL ISOLATION**	**01-01-2011**
15641	**CORROSION CONTROL TEST STATIONS**	**01-01-2011**
DIVISION 16 – ELECTRICAL		
16010	**BASIC ELECTRICAL REQUIREMENTS**	**01-01-2011**
16640	**CATHODIC PROTECTION FOR PIPELINES**	**01-01-2011**

APPENDIX A – STORM WATER POLLUTION PREVENTION PROGRAM……10-2012

END OF DOCUMENT

Document 00015

LIST OF DRAWINGS

Sheet No.	Drawing Title
1	COVER SHEET AND VICINITY MAP
2	INDEX AND LEGEND
3	GENERAL AND CONSTRUCTION NOTES
4	SHEET LAYOUT (SHEET 1 OF 2)
5	SHEET LAYOUT (SHEET 2 OF 2)
6	SURVEY CONTROL MAP (SHEET 1 OF 3)
7	SURVEY CONTROL MAP (SHEET 2 OF 3)
8	SURVEY CONTROL MAP (SHEET 3 OF 3)
9	SWING TIES (SHEET 1 OF 2)
10	SWING TIES (SHEET 2 OF 2)
11	PLAN & PROFILE - WATER LINE - STA BEGIN TO STA 4+00
12	PLAN & PROFILE - WATER LINE - STA 4+00 TO STA 9+00
13	PLAN & PROFILE - WATER LINE - STA 9+00 TO PEMBRIDGE DR.
14	PLAN & PROFILE - WATER LINE - W. BELLFORT TO STA 16+00
15	PLAN & PROFILE - WATER LINE - STA 16+00 TO STA 21+00
16	PLAN & PROFILE - WATER LINE - STA 21+00 TO STA 25+00
17	PLAN & PROFILE - WATER LINE - STA 25+00 TO LUDINGTON DR.
18	PLAN & PROFILE - WATER LINE - PEMBRIDGE DR. TO STA 32+00
19	PLAN & PROFILE - WATER LINE - STA 32+00 TO STA 37+00
20	PLAN & PROFILE - WATER LINE - STA 37+00 TO STA 42+00
21	PLAN & PROFILE - WATER LINE - STA 42+00 TO STA 47+00
22	PLAN & PROFILE - WATER LINE - STA 47+00 TO STA 51+50
23	PLAN & PROFILE - WATER LINE - STA 51+50 TO STA 56+00
24	PLAN & PROFILE - WATER LINE - STA 56+00 TO STA 61+00
25	PLAN - WATER LINE - STA 61+00 TO STA 66+00
26	PROFILE - WATER LINE - STA 61+00 TO STA 66+00
27	PLAN & PROFILE - WATER LINE - STA 66+00 TO SANDPIPER DR.
28	PLAN & PROFILE - WATER LINE - LUDINGTON DR. TO STA 75+00
29	PLAN & PROFILE - WATER LINE - STA 75+00 TO STA 79+40
30	PLAN & PROFILE - WATER LINE - STA 79+40 TO STA 84+40
31	PLAN & PROFILE - WATER LINE - STA 84+40 TO STA 89+00
32	PLAN & PROFILE - WATER LINE - STA 89+00 TO STA 93+50
33	PLAN & PROFILE - WATER LINE - STA 93+50 TO STA AIRPORT BLVD.
34	PRESTRESSED CONCRETE CYLINDER PIPE DETAILS
35	STEEL PIPE DETAILS
36	GATE VALVE DETAIL
37	VALVE AND SERVICE MANHOLE DETAILS

Sheet No.	Drawing Title
38	AIR VALVE AND MANHOLE DETAILS
39	MISCELLANEOUS WATER LINE DETAILS
40	EXTRA DEPTH MANHOLE DETAIL
41	TUNNEL AND CASING DETAILS
42	SMALL DIAMETER WATER LINE DETAILS
43	EXCAVATION, BEDDING, BACKFILL & PAVEMENT REPAIR DETAILS
44	CATHODIC PROTECTION DETAILS FOR TEST STATIONS
45	CATHODIC PROTECTION DETAILS FOR TEST STATIONS AND ANODES (SHEET 1 OF 2)
46	CATHODIC PROTECTION DETAILS FOR TEST STATIONS AND ANODES (SHEET 2 OF 2)
47	CATHODIC PROTECTION DETAILS FOR JOINT BONDING (SHEET 1 OF 2)
48	CATHODIC PROTECTION DETAILS FOR JOINT BONDING (SHEET 2 OF 2)
49	CATHODIC PROTECTION RECTIFIER AND DEEP ANODE GROUND BED
50	STANDARD SANITARY OR STORM SEWER CONSTRUCTION DETAILS
51	SANITARY SEWER PRECAST CONCRETE MANHOLE
52	STANDARD DRAINAGE DETAILS SHEET 1 OF 2
53	STANDARD DRAINAGE DETAILS SHEET 2 OF 2
54	STORM SEWER TYPE "BB" INLET DETAILS
55	TYPE C-1, C-2 AND C-2A INLETS
56	STORM SEWER TYPE "E" INLET DETAILS
57	MISCELLANEOUS STORM DETAILS
58	DRIVEWAY AND DITCH DETAILS
59	PAVEMENT AND DRIVEWAY SCHEDULE
60	PAVEMENT DETAILS SHEET 1 OF 3
61	PAVEMENT DETAILS SHEET 2 OF 3
62	PAVEMENT DETAILS SHEET 3 OF 3
63	PAVEMENT REPAIR DETAILS
64	STREET CUT DETAILS
65	STANDARD PAVEMENT MARKING
66	SIDEWALK AND WHEELCHAIR RAMP DETAILS 1 OF 2
67	SIDEWALK AND WHEELCHAIR RAMP DETAILS 2 OF 2
68	CONCRETE SIDEWALK DETAIL FOR STREETS WITH CURB
69	EXTRA DEPTH MANHOLE DETAIL FOUNDATION DETAILS
70	TCP - GENERAL NOTES
71	OVERALL TCP LAYOUT
72	W. BELLFORT AVE. - PHASE I
73	PEMBRIDGE DRIVE - PHASE II – STEP 1 & 2
74	LUDINGTON DRIVE - PHASE III, - STEP1, SHEET 1 OF 3
75	LUDINGTON DRIVE - PHASE III – STEP2, SHEET 2 OF 3
76	LUDINGTON DRIVE - PHASE III – STEP2, SHEET 3 OF 3
77	LUDINGTON DRIVE - PHASE IV
78	LUDINGTON DRIVE - PHASE V
79	SANDPIPER DRIVE - PHASE IV - STEP I

Sheet No.	Drawing Title
80	SANDPIPER DRIVE - PHASE IV - STEP 2
81	DETOUR PLAN PHASE II
82	DETOUR PLAN PHASE III
83	DETOUR PLAN PHASE V
84	DETOUR PLAN PHASE VI - STEP I
85	W. BELLFORT AVE. AT PEMBRIDGE DR. - INTERSECTION DETAILS PHASE II – STEP 1
86	TYPICAL INTERSECTION DETAIL - SHEET 1 0F 2
87	TYPICAL INTERSECTION DETAIL -SHEET 2 0F 2
88	BARRICADE STANDARDS
89	SIDEWALK DETOUR AND CLOSURE DETAILS
90	TREE PROTECTION PLAN SHEET 1 OF 6
91	TREE PROTECTION PLAN SHEET 2 OF 6
92	TREE PROTECTION PLAN SHEET 3 OF 6
93	TREE PROTECTION PLAN SHEET 4 OF 6
94	TREE PROTECTION PLAN SHEET 5 OF 6
95	TREE PROTECTION PLAN SHEET 6 OF 6

END OF DOCUMENT

Document 00200

TABLE OF CONTENTS

INSTRUCTIONS TO BIDDERS

PARA	TITLE	PAGE
1.0	*RELATED DOCUMENTS*	1
2.0	*DEFINITIONS*	1
3.0	*NOTICE TO BIDDERS*	2
4.0	*BID DOCUMENTS*	2
5.0	*EXAMINATION OF DOCUMENTS, SITE, AND LOCAL CONDITIONS*	2
6.0	*INTERPRETATIONS DURING BIDDING*	2
7.0	*ADDENDA*	3
8.0	*SUBSTITUTION OF PRODUCTS*	3
9.0	*PREPARATION OF BIDS*	3
10.0	*BID SUBMISSION*	3
11.0	*BID SECURITY*	4
12.0	*SUBCONTRACTORS AND SUPPLIERS*	4
13.0	*MODIFICATION OR WITHDRAWAL OF BID*	4
14.0	*BID DISQUALIFICATION*	4
15.0	*PREBID MEETING*	5
16.0	*OPENING OF BIDS*	5
17.0	*EVALUATION AND CONSIDERATION OF BIDS*	5
18.0	*ACCEPTANCE OF THE BID*	5

Document 00200

INSTRUCTIONS TO BIDDERS

1.0 *RELATED DOCUMENTS*

A. Document 00210 - Supplementary Instructions to Bidders.

B. Document 00320 - Geotechnical Information.

C. Document 00330 - Existing Conditions.

D. Document 00410 - Bid Form, Parts A & B.

E. Document 00495 - Post-Bid Procedures.

F. Document 00520 - Agreement.

G. Document 00700 - General Conditions.

H. Document 00800 - Supplementary Conditions.

2.0 *DEFINITIONS*

A. Definitions set forth in Document 00700 - General Conditions and in other documents of Project Manual, are applicable to Bid Documents.

B. *Addendum:* Written or graphic instrument issued prior to Bid opening, which clarifies, modifies, corrects, or changes Bid Documents.

C. *Alternate:* The total amount bid for additions to work, as described in Section 01110 - Summary of Work. Each Alternate includes cost of effects on adjacent or related components, and Bidder's overhead and profit.

D. *Bid:* A complete and properly signed offer to perform the Work in accordance with this Document and Document 00210 - Supplementary Instructions to Bidders.

E. *Bid Date:* Date and time set for receipt of Bids as stated in Document 00210 - Supplementary Instructions to Bidders, or as modified by Addenda.

F. *Bid Documents:* Project Manual, Drawings, and Addenda.

G. *Bid Supplement:* A Bid submittal that is required in Document 00410 - Bid Form.

H. *Bidder:* Person or firm, identified in Document 00410B - Bid Form – Part B, including its successors, and its authorized representative.

I. *Code:* Code of Ordinances, Houston, Texas.

J. *Low Bidder:* Apparent successful Bidder that qualifies as a responsible Bidder and that submits Bid with lowest Total Bid Price.

K. *Project Manager:* Person designated in Document 00100 - Advertisement for Bids and Document 00220 - Request for Bid Information to represent the City during bidding and post-bid periods.

L. *Project Manual*: Volume assembled for the Work that includes the bidding requirements, sample forms, Conditions of the Contract, and Specifications.

M. *Security Deposit:* A certified check, cashier's check, or bid bond in the amount of 10 percent of the Total Bid Price.

N. *Total Bid Price:* Total amount bid for performing the Work as identified by Bidder in Document 00410B – Bid Form – Part B, which amount includes:
   1. Stipulated Price;
   2. Total Base Unit Prices;
   3. Total Extra Unit Prices;
   4. Total Cash Allowances; and
   5. Total Alternates.

3.0 *NOTICE TO BIDDERS*

A. The City of Houston Fair Campaign Ordinance makes it unlawful for a Contractor to offer any contribution to a candidate for City elective office (including elected officers and officers-elect) during a certain period of time prior to and following the award of the Contract by the City Council. The term "Contractor" includes proprietors of proprietorships, all partners of partnerships, and all officers, directors, and holders of 10 percent or more of the outstanding shares of corporations. A statement disclosing the names and business addresses of each of those persons will be required to be submitted with each bid or proposal for a City Contract. Bidder shall complete and submit Document 00452 – Form A, Contractor Submission List, City of Houston Fair Campaign Ordinance, with its Bid to comply with this requirement. See Chapter 18 of the Code for further information.

B. Chapter 15, Article VIII, of the City's Code provides that no contract shall be let, nor any other business transaction entered into, by the City with any person indebted to the City or a qualifying entity, if the contractor or transaction comes within the provisions of Section 15-1(c) of the Code. Exceptions are provided in Section 15-126 of the Code. Bidder shall complete and submit Document 00455 – Affidavit of Ownership or Control, with its Bid to comply with this requirement.

4.0 *BID DOCUMENTS*

A. The Bid Documents may be obtained at location specified in Document 00210 - Supplementary Instructions to Bidders.

B. The Bid Documents are made available only for the purpose of bidding on the Work. Receipt of Bid Documents does not grant a license for other purposes.

C. On receipt of Bid Documents, Bidder shall verify that documents are legible and complete, compare contents of Project Manual with Document 00010 - Table of Contents, and compare Index of Drawings with Document 00015 - List of Drawings. Bidder shall notify Project Manager if Bid Documents are incomplete.

D. If City of Houston Standard Specifications or Standard Details are required by the Project Manual, Bidder shall refer to Document 00210 - Supplementary Instructions to Bidders for purchase information.

5.0 *EXAMINATION OF DOCUMENTS, SITE, AND LOCAL CONDITIONS*

A. Bidder shall examine Project site, become familiar with local conditions under which the Work shall be performed, conduct appropriate investigations, and correlate personal observations with requirements of the Bid Documents before submitting a Bid.

B. Bidder shall make site investigations to the extent Bidder deems necessary to ascertain extent of subsurface conditions.

C. Failure of Bidder to perform the investigations prior to submitting a Bid does not relieve Bidder of responsibility for investigations, interpretations and proper use of available information in the preparation of its Bid.

D. Bidder shall observe limitations of access to occupied or restricted site as stated in Document 00210 - Supplementary Instructions to Bidders.

6.0 *INTERPRETATIONS DURING BIDDING*

A. Bidder shall immediately submit Document 00220 - Request for Bid Information to Project Manager upon finding errors, discrepancies, or omissions in Bid Documents. Confirmation of receipt of questions by the City is the responsibility of Bidder. Verbal discussions and answers are not binding.

B. Document 00220 - Request for Bid Information must be received at least 10 days before the Bid Date to allow issuance of Addenda in accordance with Paragraph 7.0.D. Replies, if issued, are by Addenda.

7.0 *ADDENDA*

A. Addenda that affect bidding requirements are applicable only during bidding period. Addenda to Document 00495 - Post-Bid Procedures are applicable only through issuance of the Notice to Proceed. Addenda that affect the Contract are a part of the Contract.

B. BIDDERS WHO SUBMIT A BID ON THIS PROJECT SHALL BE PRESUMED TO HAVE RECEIVED ALL ADDENDA AND TO HAVE INCLUDED ANY COST THEREOF IN THEIR BIDS, REGARDLESS OF WHETHER THEY ACKNOWLEDGE THE ADDENDA OR NOT.

C. The City will make Addenda available at same location where the Bid Documents may be obtained. The City will notify plan holders of record when Addenda are available. Bidders are responsible for obtaining Addenda after notification.

D. No Addendum will be issued later than noon on Monday before Bid Date, except Addenda with minor clarifications, withdrawing request for Bids, or postponing Bid Date.

8.0 *SUBSTITUTION OF PRODUCTS*

A. No substitutions of Products will be considered during the bidding period.

9.0 *PREPARATION OF BIDS*

A. Bidder shall fill in applicable blanks in Document 00410A&B - Bid Form – Parts A & B and Bid Supplements. In addition, Bidder shall bid all Alternates. Bidder shall properly sign Document 00410B - Bid Form.

B. Bidder shall initial all pages, except signature page, of Document 00410B – Bid Form – Part B.

C. Bidder is responsible for all costs incurred by the Bidder, associated with preparation of its Bid and compliance with Post-bid Procedures.

D. Bidder may not adjust preprinted price on line items stating "Fixed Unit Price" in the description on the Bid Form.

E. Bidder may increase preprinted price on line items stating "Minimum Bid Price" in the description on the Bid Form by crossing out the minimum and inserting revised price on the line above.

F. Bidder may decrease preprinted price on line items stating "Maximum Bid Price" in the description on the Bid Form by crossing out the maximum and inserting revised price on the line above.

G. Bidder shall insert a price no greater than the maximum preprinted range and no less than the preprinted range for line items stating "Fixed Range Unit Price" in the description on the Bid Form by crossing out prices noted and inserting revised price on the line above.

H. Bidder may not adjust Cash Allowance amounts.

10.0 *BID SUBMISSION*

A. City Secretary will receive Bids on Bid Date at location specified in Document 00210 - Supplementary Instructions to Bidders.

B. Bids submitted after Bid Date will be returned to Bidder unopened.

C. Verbal, facsimile, or electronic Bids are invalid and will not be considered.

D. Bidder shall submit in person or by mail one copy of the signed Document 00410 - Bid Form, Parts A and B, along with required Security Deposit, and required Bid Supplements, in a sealed, opaque envelope. In addition, Bidder shall clearly identify Project, Bid Date and Bidder's name on outside of envelope. If forwarded by mail, the sealed envelope containing the Bid must be enclosed in another envelope addressed for postal delivery.

11.0 *BID SECURITY*

A. Bidder shall submit a Security Deposit with its Bid.

B. Certified Check or Cashier's Check

1. Bidder shall make check payable to the City of Houston.

2. A check is submitted on the condition that if Bidder is named Low Bidder and fails either to timely and properly submit documents required in Document 00495 - Post-Bid Procedures, the City will cash the check in accordance with Paragraph 11.0.E.

C. Bid Bond

1. The bid bond must be a valid and enforceable bond, signed by a surety that complies with other requirements set out by law.

2. The bid bond must name the City of Houston as obligee, and be signed by the Bidder as principal and signed and sealed by the surety.

3. The bid bond must be conditioned such that if Bidder is named Low Bidder and then fails to timely and properly submit documents required in Document 00495 - Post-Bid Procedures, surety will be obligated to pay to the City an amount in accordance with Paragraph 11.0.E.

D. Security Deposits will be retained until after the Contract is awarded or all Bids are rejected.

E. Low Bidder forfeits Security Deposit if it fails to timely and properly submit documents required in Document 00495 - Post-Bid Procedures. The City may claim an amount equal to the difference between the Total Bid Price of the defaulting Bidder and the Total Bid Price of the Bidder awarded the Contract. If Security Deposit is a check, the City will reimburse any remaining balance to the defaulting Bidder.

12.0 *SUBCONTRACTORS AND SUPPLIERS*

A. The City may reject proposed Subcontractors or Suppliers.

B. Refer to Document 00800 - Supplementary Conditions, for MWBEPDBE, DBE and SBE goals.

13.0 *MODIFICATION OR WITHDRAWAL OF BID*

A. A Bidder may modify or withdraw a Bid submitted before the Bid Date by written notice to the City Secretary. The notice may not reveal the amount of the original Bid and must be signed by the Bidder.

B. Bidder may not modify or withdraw its Bid by verbal, facsimile, or electronic means.

C. A withdrawn Bid may be resubmitted up to the time designated for receipt of Bids.

14.0 *BID DISQUALIFICATION*

A. The City may disqualify a Bid if the Bidder:

1. fails to provide required Security Deposit in the proper amount;

2. improperly or illegibly completes information required by the Bid Documents;

3. fails to sign Bid or improperly signs Bid;

4. qualifies its Bid; or

5. improperly submits its Bid.

B. When requested, Low Bidder shall present satisfactory evidence that Bidder has regularly engaged in performing construction work as proposed, and has the capital, labor, equipment, and material to perform the Work.

15.0 *PREBID MEETING*

A. A prebid meeting is scheduled to be held at the place, time, and date listed in Document 00210 - Supplementary Instructions to Bidders.

B. All Bidders, subcontractors, and suppliers are invited to attend.

C. Representatives of City Engineer will attend.

16.0 *OPENING OF BIDS*

A. Bids are opened by the City Secretary and publicly read in City Council Chambers on the Public Level in City Hall Annex at 11:00 a.m. on Bid Date.

B. Place and date of Bid opening may be changed in accordance with Sections 15-3(b)(5) and 15-3(b)(6) of the City Code.

17.0 *EVALUATION AND CONSIDERATION OF BIDS*

A. Project Manager will tabulate, record, and evaluate Bids.

B. The City may reject all Bids or may reject any defective Bid.

18.0 *ACCEPTANCE OF THE BID*

A. The City will send to Low Bidder Document 00498 - Notice of Intent to Award. Acceptance by the City is conditioned upon Bidder's timely and proper submittal of documents required in Document 00495 - Post-Bid Procedures.

B. The Bid remains open to acceptance and is irrevocable for the period of time stated in Document 00410A - Bid Form – Part A.

END OF DOCUMENT

Document 00210

SUPPLEMENTARY INSTRUCTIONS TO BIDDERS

The following Paragraphs modify Document 00200 - Instructions to Bidders. Where a portion of the Instructions to Bidders is modified or deleted by these Supplementary Instructions, the unaltered portions of the Instructions to Bidders remains in effect.

2.0 – DEFINITIONS: Add the following Paragraphs to this Section:

O. *Office of Business Opportunity (OBO):* All references to Affirmative Action Contract Compliance Division (AACC) set forth in Document 00700 – General Conditions and in other documents of the Project Manual, shall refer to, and include, the Office of Business Opportunity.

Q. *Director:* Director, Department of Public Works and Engineering, City of Houston.

3.0 - NOTICE TO BIDDERS: Add the following Paragraph to this Section:

C. The City will award this contract to a "Local Business", as that term is defined in Section 15-176 of the City of Houston Code of Ordinances ("the Code"):

- If the bid of the Local Business is less than $100,000 and is the lowest responsible bid or is within 5% of the lowest bid received, or
- If the bid of the Local Business is more than $100,000 and is the lowest responsible bid or is within 3% of the lowest bid received, and
- Unless the Director determines that such an award would unduly interfere with contract needs, as provided in Section 15-181 of the Code.

If there is no bid of a Local Business that meets these criteria, the City will award the contract to the lowest responsible bidder.

4.0 – BID DOCUMENTS: Add the following Paragraphs to this Section:

A. Add the following Paragraph A.1:

1. Bid documents may only be obtained electronically at the City's website: http://bidsets.publicworks.houstontx.gov/.

D. Add the following Paragraph D.1:

1. Copies of the City Standard Specifications and Details may be acquired at no cost on the City's website

http://documents.publicworks.houstontx.gov/document-center/cat_view/88-engineering-and-construction/92-specifications/208-division-02-16-standard-specifications.html

E. The following plan rooms, whose names, addresses, phone and fax numbers were last updated on April 9, 2007, have been authorized by the City to display Bid Documents for examination:
(Note: The Bid Documents furnished to the plan rooms for examination can be in electronic format, in hard copies, or in any other formats pertaining to each City Contracting Division's discretion.)

1. AMTEK Information Services, Inc., 4001 Sherwood Lane, Houston, TX 77092, 713-956-0100, Fax 713-956-5340, Email: planroom@amtekusa.com

2. Associated Builders & Contractors, Inc., (ABC), 3910 Kirby, Suite 131, Houston, TX 77098-4151, 713-523-6222, Fax 713-874-0747. Email: lori@abchouston.org

3. Associated General Contractors (AGC-BB) Building Branch, 3825 Dacoma, Houston, TX 77092-8717, 713-843-3700, Fax 713-843-3701. Email: karla.s@agchouston.org

4. Associated General Contractors, (AGC-HHUI), Highway, Heavy Utilities and Industrial Branch, 2400 Augusta St., Suite 180, Houston, TX 77057, 713-334-7100, Fax 713-334-7130. Email: houston@agctx.org (Attention: Mel Keyser)

5. Construction Information Network, 1225 North Loop West, Suite 550, Houston, TX 77008, 713-868-2233 ext. 329, Fax 866-852-2713. Email: paul.tilford@cnsx.com

6. F. W. Dodge Corporation, 4101 Greenbriar, Suite 320, Houston, TX 77098, 713-529-4895, Fax 713-524-7639. Email: terrie_harris@mcgraw-hill.com

7. Hispanic Contractors Association of Houston (HCA-GHA), 11 Parker Road, Suite 7, Houston, TX 77241, 713-699-2732 or 832-754-3705, Fax 713-695-1556, Email: hispanicontractorsassociation@yahoo.com; or Randymagdaleno@yahoo.com

8. Houston Minority Business Development Center, 2900 Woodridge, Suite 124, Houston, TX 77087, 713-644-0821, Fax 713-644-3523. Email: gtamez@gacompanies.com

9. Reed Construction Data, 30 Technology Parkway South, Suite 100, Norcross, GA – 30092-8629. Tel. 1-800-424-3996 or 1-800-699-8640; Fax 1-800-317-0870 or 1-800-508-5370.

10. The Builders' Exchange of Texas, Inc., 3910 Kirby, Suite 131, Houston, TX 77098, 210-564-6900, Fax: 210-564-6921, Email: houston@bxtx.com

F. Add the following Paragraph F.1:

1. Designation as a City Business or Local Business

To be designated as a City or Local Business for the purposes of the Hire Houston First Program, as set out in Article XI of Chapter 15 of the Houston City Code, a bidder or proposer must submit the Hire Houston First Application and Affidavit ("HHF Affidavit") to the Director of the Mayor's Office of Business Opportunities and receive notice that the submission has been approved prior to award of a contract. Bidders are encouraged to secure a designation prior to submission of a bid or proposal.

Download the HHF Affidavit from the Office of Business Opportunities Webpage at the City of Houston e-Government Website at the following location:

www.houstontx.gov/obo/moreforms/hirehoustonfirstaffidavit.pdf

Submit the completed application as directed on the form, or submit a signed original affidavit with your bid.

5.0 - EXAMINATION OF DOCUMENTS, SITE, AND LOCAL CONDITIONS: Insert the following paragraph:

D. Add the following Paragraph D.1:

1. Work will be performed in public right-of-way. The site may be examined at any time during daylight hours.

9.0 – PREPARATION OF BIDS: Add the following Paragraph I to this Paragraph:

I. For math errors the City encounters in analyzing Bids, the following guidance will be used:

In the event of a conflict between: The Bid Price is:

1. Individual Unit Price and Extension of that Unit Price	Individual Unit Price times Estimated Quantity
2. A Unit Price extension and total of Unit Price Extensions	Sum of all Individual Unit Price Extensions
3. Individual Alternate and total of Alternates	Sum of all Individual Alternates
4. Individual subtotals for Stipulated Price, Base Unit Prices, Extra Unit Prices, Contractor Bonus, Cash Allowances, and Alternates; and the Total Bid Price	Sum of Individual subtotals for Stipulated Price, Base Unit Prices, Extra Unit Prices, Contractor Bonus, Cash Allowances and Alternates

10.0 – BID SUBMISSION: Add the following Paragraph A.1 to this Section:

A. Add the following Paragraph A.1:

1. City Secretary will receive Bids at 900 Bagby, Room P101, Houston, Texas until 10:30 a.m., local time on May 9, 2013.

15.0 – PREBID MEETING: Add the following Paragraph A.1 to this Section:

A. Add the following Paragraph A.1:

1. A Prebid Meeting will be held at 10:00 A.M. on Monday, April 29, 2013, in 15th Floor, Conference Room No. 1546 at 611 Walker, Houston, Texas 77002.

END OF DOCUMENT

Document 00220

REQUEST FOR BID INFORMATION

PROJECT: Proposed 42-Inch Water Line along Sandpiper Dr. Lundington Dr Pembridge Dr and W. Bellfort from W. Aiport to Braes Forest Road.

PROJECT No.: WBS No. S-000900-0111-4

TO: Arthur C. Morris, P.E.
15th Floor
611 Walker, Houston, Texas 77002

Phone No. (832) 395-2317
Fax No. (832) 395-2333
Email Addr. arthur.morris@Houstontx.gov

(Type or Print question legibly; use back if more space is needed)

This request relates to _____ (Drawing / Detail No.) and/or _____ (Specification Section No.)

Attachments to this request: _____

_____ Signature

_____ Date

_____ (Type or Print Name)

_____ (Type or Print Company Name)

END OF DOCUMENT

Document 00251

PREBID MEETING AGENDA

Project: Proposed 42-Inch Water Line along Sandpiper Dr. Lundington Dr Pembridge Dr and W. Bellfort from W. Aiport to Braes Forest Road.
Project No.: WBS No. S-000900-0111-4 **Date:** Monday, April 29, 2013
Time: 10:00 A.M., 15th Floor, Conference Room No. 1546
Location: 611 Walker, Houston, Texas 77002

- Announce the name, location and general scope of the project to all attendees and state purpose of meeting. Announce that, at present, bids will be taken on Thursday, May 9, 2013.

- Pass around sign in sheet. Have everyone sign it and tell them that they are to include a FAX number or email address if they want a copy of the completed list of attendees. If location permits you may be able to run a copy of sign in sheet for everyone before meeting ends.

- Advise all attendees that whatever is said during the meeting is meant to be helpful but does not and cannot change the Bid Documents. Bidders must rely on published Addenda for official answers to questions that are not currently covered by Bid Documents.

- Introduce all parties present who are involved in the Project.
  Project Manager Arthur C. Morris, P.E.
  Design Consultant Representative _____
  User Department Representative _____
  Construction Manager _____
  Environmental/Abatement Rep. _____
  Contract Compliance Inspector _____
  MWBE & Wage Rate Monitor _____
  Testing Laboratory Representative _____

- If Office of Business Opportunity (OBO) or Dept. of Housing & Community Development (DHCD) representative does not attend, announce MWBE and any PDBE or DBE participation goals for Project. Remind them about monthly reports that must be filed with AA/CCD or DHCD.

- If OBO or DHCD representative is present, allow them, at this point, to make their presentation and leave.

- Explain to attendees difference between City Code Inspectors and our own Contract Compliance Inspectors.

- Announce Addendum No. 1 is to be released shortly or on _____. Registered Plan Holders will receive notification to download electronically at the City's website: http://bidsets.publicworks.houstontx.gov/ . All Addenda for those who have not yet downloaded, Bid Documents are available as part of a set of complete Bid Documents, on the City's website

- Announce a tentative schedule of events:

Last Addendum	_____
Receive Bids	May 9, 2013
Notify apparent Low Bidder	[Monday after Bid Date]
Low Bidder provides Post Bid Docs	[usually 10 days later]
Contract Awarded	[45-90 days later]

- Discuss other issues peculiar to Project (e.g. asbestos and lead abatement, soil remediation, buried tanks, archeological, etc.)

Name	Company	Phone	* FAX/email

* Include FAX number or email address if you want a completed copy of the sign up sheet sent to you.

Document 00320

GEOTECHNICAL INFORMATION

1. DOCUMENT INCLUDES

   A. Soils investigation reports.
   B. Bidder's responsibilities.

2. RELATED DOCUMENTS

   A. Document 00340 – Environmental Information
   B. Section 02260 - Trench Safety Systems

3. SITE INVESTIGATION REPORTS

   A. In the design and preparation of Contract documents for this Project, the City and Design Consultant have used information in geotechnical reports for the investigation and analysis of soils and subsurface conditions at the Project site.

   B. An electronic copy of the report for this project is included in a CD-Rom affixed to the inside front cover of the project manual.

   C. Neither the City nor Design Consultant is responsible for accuracy or completeness of any information or data.

4. GEOTECHNICAL REPORTS

   A. Report No.: 1140-1837-01 Prepared by (Firm Name): Geotest Engineering, Inc. Title: Geotechnical Investigation Surface Water Transmission Program Contract 74B, WBS No. S-000900-0111-3 Houston, Texas Report Date: October 16, 2012 No. of Pages: 107

5. BIDDER RESPONSIBILITIES

   A. Bidder shall take full responsibility for interpretation and use of information contained in above listed reports for its bidding and construction purposes.

B. Bidder may perform additional soils investigations as Bidder deems appropriate.

END OF DOCUMENT

Document 00340

ENVIRONMENTAL INFORMATION

1.0 DOCUMENT INCLUDES

A. Environmental Site Assessment, if applicable.

B. Asbestos and Lead Surveys, if applicable.

C. Bidder's responsibilities.

2.0 RELATED DOCUMENTS

A. Document 00320 - Geotechnical Information

3.0 SITE INVESTIGATION REPORTS

A. In the design and preparation of Contract documents for this Project, the City and Design Consultant have used information in environmental site assessment reports for the investigation and analysis of soils and subsurface conditions at the Project site.

B. In the design and preparation of Contract documents for this Project, the City and Design Consultant have relied upon information in surveys taken for Asbestos-containing Materials (ACMs) and lead at the Project site.

C. An electronic copy of each report for this project is included in a CD-Rom affixed to the inside front cover of the project manual.

D. Neither the City nor Design Consultant is responsible for accuracy or completeness of any information or data.

4.0 REPORTS

A. Environmental Assessment Surveys

1. Report No.: 1130-0158-01 Prepared by (Firm Name): Geotest Engineering, Inc. Title: Phase I Environmental Site Assessment Surface Water Transmission Program Contract 74B, WBS No.R-000900-0111-3 Houston, Texas Report Date: April 17, 2012 No. of Pages: 220

5.0 BIDDER RESPONSIBILITIES

A. Bidder shall take full responsibility for interpretation and use of information contained in above listed reports for bidding and construction purposes.

B. Bidder may perform additional investigations as Bidder deems appropriate.

END OF DOCUMENT

Document 00410A

BID FORM – PART A

To: **The Honorable Mayor and City Council of the City of Houston**
City Hall Annex
900 Bagby Street
Houston, Texas 77002

Project: *Proposed 42-Inch Water Line along Sandpiper Dr. Lundington Dr Pembridge Dr and W. Bellfort from W. Aiport to Braes Forest Road.*
Project No.: WBS S-000900-0111-4
Bidder: _____
(Print or type full name of proprietorship, partnership, corporation, or joint venture.)

OFFER

A. **Total Bid Price:** Having examined the Project location and all matters referred to in Bid Documents for the Project, we, the undersigned, offer to enter into a Contract to perform the Work for the Total Bid Price shown on the signature page of this Document

B. **Security Deposit:** Included with the Bid is a Security Deposit in the amount of 10 percent of the Total Bid Price subject to terms described in Document 00200 – Instructions to Bidders.

C. **Period for Bid Acceptance:** This offer is open to acceptance and is irrevocable for 90 days from Bid Date. That period may be extended by mutual written agreement of the City and Bidder.

D. **Addenda**: All Addenda have been received. Modifications to Bid Documents have been considered and all related costs are included in the Total Bid Price.

E. **Bid Supplements:** The following documents are attached:

[X] Security Deposit *(as defined in Document 00200 – Instructions to Bidders)*
[X] Document 00450 - Bidder's Statement of MWBE/PDBE/DBE/SBE Status
[X] Document 00452 - Contractor's Submission List - Fair Campaign Ordinance Form A
[X] Document 00453 – Bidder's Statement of Residency *(not required for AIP funded project)*
[X] Document 00454 - Affidavit of Non-interest
[X] Document 00455 - Affidavit of Ownership or Control
[ ] Document 00456 - Bidder's Certificate of Compliance with Buy American Program *(required for AIP funded project)*
[X] Document 00457 – Conflicts of Interest Questionnaire (CIQ)
[ ] Document 00458 - Bidder's Certificate Regarding Foreign Trade Restriction *(required for AIP funded project)*
[ ] Document 00459 - Contractor's Statement Regarding Previous Contracts Subject to EEO *(required for AIP funded project)*
[X] Document 00460 – (POP-1) Pay or Play Acknowledgement Form
[ ] Others as listed: _____

CONTRACT TIME

A. If offer is accepted, Contractor shall achieve Date of Substantial Completion within 270 days after Date of Commencement of the Work, subject to adjustments of Contract Time as provided in the Contract.

Document 00410B

BID FORM – PART B

1.0 TOTAL BID PRICE HAS BEEN CALCULATED BY BIDDER, USING THE FOLLOWING COMPONENT PRICES AND PROCESS (PRINT OR TYPE NUMERICAL AMOUNTS):

A. STIPULATED PRICE: **$**N/A

(Total Bid Price; minus Base Unit Prices, Extra Unit Prices, Cash Allowances and All Alternates, if any)

B. BASE UNIT PRICE TABLE:

Item No.	Spec Ref.	Base Unit Short Title	Unit of Measure	Estimated Quantity	Unit Price (this column controls)	Total in figures
GENERAL						
1	01502	Mobilization	LS	1	$200,000.00(1)	$200,000.00(1)
2	01555	Traffic Control and Regulation	LS	1	$80,000.00(2)	$80,000.00(2)
3	01555	Flagmen	LS	1	$30,000.00(2)	$ 30,000.00(2)
4	01562	Tree and Plant Protection	LS	1		
5	01570	Reinforced Fabric Fence	LF	480		
6	01570	Inlet Protection Barrier	LF	1040		
7	01570	Inlet Protection Barrier – Bagged Gravel	LF	232		
8	01575	Stabilized Construction Access	SY	1,100		
9	01578	Ground Water control for Open-Cut Construction	LF	6,655	$15.00(2)	$ 99,825.00(2)
10	01270	Site Restoration for Small Diameter Water Line	LF	2,477		
11	02260	Trench Safety System for Trench Construction	LF	9,057		
12	02921	Hyrdromulch Seeding	AC	3.60		
13	02922	Sodding	SY	2,000		

Item No.	Spec Ref.	Base Unit Short Title	Unit of Measure	Estimated Quantity	Unit Price (this column controls)	Total in figures
WATER						
14	02082	Water main Access Manhole	EA	12		
15	02082	Extra Depth Manhole	VF	127		
16	02082	Service operator manhole for butterfly valve	EA	2		
17	02082	Service manhole for air valve	EA	4		
18	02511	3-inch diameter water line w/ Restrained Joints by Open Cut	EA	60		
19	02511	6-inch diameter water line w/ Restrained Joints by Open Cut	LF	130		
20	02511	6-inch diameter water line w/ Restrained Joints by Trenchless Construction	LF	43		
21	02511	8-inch diameter water line w/ Restrained Joints by Open Cut	LF	278		
22	02511	8-inch diameter Ductile Iron water line w/ Restrained Joints by Open Cut	LF	18		
23	02511	8-inch diameter water line w/ Restrained Joints by Trenchless Construction	LF	63		
24	02511	12-inch diameter water line w/ Restrained Joint by open cut	LF	226		
25	02511	12-inch diameter water line by Trenchless Construction	LF	2,477		
26	02511	16-inch diameter water line w/ Restrained Joint by open-cut	LF	46		
27	02511	20-inch diameter water line w/ Restrained Joint by open-cut	LF	35		
28	02511	42-inch diameter water line by open-cut	LF	8,877		
29	02511	42-inch diameter water line by tunnel	LF	361		

Item No.	Spec Ref.	Base Unit Short Title	Unit of Measure	Estimated Quantity	Unit Price (this column controls)	Total in figures
30	02511	Remove 42-inch diameter internal elliptical or dished head plug	EA	1		
31	02511	Drainline Valve W/ Access Manhole and 18-inch RCP Connection	EA	4		
32	02511	42-inch x 16-inch interconnection	LS	1		
33	02513	3/4" to 1" Copper Service Connection, Short Side	EA	32		
34	02513	3/4" to 1" Copper Service Connection, Long Side	EA	44		
35	02513	1-1/2” Copper Service Connection, Long Side	EA	1		
36	02513	3-inch diameter wet connection	EA	1		
37	02513	6-inch diameter wet connection	EA	9		
38	02513	8-inch diameter wet connection	EA	21		
39	02513	12-inch diameter wet connection	EA	9		
40	02513	20-inch diameter wet connection	EA	2		
41	02516	Cut, plug, and abandon existing 6-inch diameter water main	EA	16		
42	02516	Cut, plug, and abandon existing 8-inch diameter water main	EA	18		
43	02516	Cut, plug, and abandon existing 12-inch diameter water main	EA	5		
44	02516	Cut, plug, and abandon existing 20-inch diameter water main	EA	2		
45	02520	Fire hydrant assembly, all depths, including 6-inch diameter gate valve and box	EA	1		
46	02520	6-inch diameter fire hydrant branch by open-cut	LF	15		
47	02522	42-inch diameter gate valve	EA	1		
48	02522	42-inch diameter butterfly valve	EA	2		

Item No.	Spec Ref.	Base Unit Short Title	Unit of Measure	Estimated Quantity	Unit Price (this column controls)	Total in figures
49	02524	3-inch diameter air inlet vacuum relief valve assembly	EA	4		
50	02525	12-inch x 6-inch tapping sleeves & valve	EA	1		
51	02525	20-inch x 12-inch tapping sleeves & valve	EA	1		
52	16640	Cathodic protection system	LS	1		
SANITARY						
53	01270	Remove and Encase - 8-inch diameter Sanitary Sewer	LF	108		
54	02221	Remove and Dispose - 6-inch diameter Sanitary Sewer	LF	144		
55	02221	Remove and Dispose - 8-inch diameter Sanitary Sewer	LF	198		
56	02221	Remove and Dispose - 10-inch diameter Sanitary Sewer	LF	90		
57	02221	Remove and Dispose - 21-inch diameter Sanitary Sewer	LF	18		
58	02531	6-inch Sanitary Sewer (Pressure Rated)	LF	144		
59	02531	8-inch Sanitary Sewer (Pressure Rated)	LF	198		
60	02531	10-inch Sanitary Sewer (Pressure Rated)	LF	90		
61	02531	21-inch Sanitary Sewer (Pressure Rated)	LF	18		
STORM						
62	01270	Support 30-inch or 42-inch Storm Sewer	EA	5		
63	02221	Remove and Dispose of 18-inch Diameter Storm Sewer	LF	38		
64	02221	Remove and Dispose of 24-inch Diameter Storm Sewer	LF	713		
65	02221	Remove and Dispose of 30-inch Diameter Storm Sewer	LF	24		

Item No.	Spec Ref.	Base Unit Short Title	Unit of Measure	Estimated Quantity	Unit Price (this column controls)	Total in figures
66	02221	Remove and Dispose of existing Inlets, all types	EA	6		
67	02221	Remove and Dispose of existing storm manholes, all types	EA	6		
68	02222	Abandon and Grout 30-inch Diameter Storm Sewer	LF	110		
69	02082	Type C Storm Sewer Manhole for 42-inch and smaller sewers	EA	12		
70	02631	24-inch Diameter Storm Sewer by Open-Cut	LF	685		
71	02631	30-inch Diameter Storm Sewer by Open-Cut	LF	180		
72	02633	Type E Inlet	EA	1		
73	02633	Type BB Inlet	EA	5		
PAVING						
74	01270	Remove and Replace Metro Bus Stop Pad	SY	162		
75	02221	Remove and Dispose of Reinforced Concrete Pavement, with or without Asphalt Overlay	SY	16,573		
76	02221	Remove and Dispose of Concrete Curb with or without Concrete Nose	LF	9,143		
77	02221	Remove and Dispose of Concrete Sidewalks and Driveways, All Thicknesses	SY	624		
78	02337	Lime Stabilized Subgrade, 6-inch	SY	19,556		
79	02337	Lime-for Lime Stabilized Subgrade	TON	282		
80	02741	Asphalt Speed Bump	LF	106		
81	02751	8-inch Reinforced Concrete Pavement	SY	13,027		

Item No.	Spec Ref.	Base Unit Short Title	Unit of Measure	Estimated Quantity	Unit Price (this column controls)	Total in figures
82	02751	8-inch Reinforced Concrete Pavement – High Early Strength	SY	3,504		
83	02752	Board Expansion Joint with Load Transfer Device	LF	1,888		
84	02752	Horizontal Dowels	EA	7,698		
85	02771	6-inch Concrete Curb	LF	9,143		
86	02771 01270	Non Doweled Expansion Joint	LF	2,851		
87	02761	Black Concrete Nose for Esplanade	SF	448		
88	02754	7-inch Concrete Driveway, including excavation	SF	4,329		
89	02775	Wheel chair Ramp	SF	579		
90	02775	4 1/2-inch Concrete Sidewalk	SF	640		
TOTAL BASE UNIT PRICES						

C. EXTRA UNIT PRICE TABLE:

Item No.	Spec Ref.	Extra Unit Short Title	Unit of Measure	Estimated Quantity	Unit Price (this column controls)	Total in figures
91	02317	6" Overexcavate Trench Bottom	LF	2,300	$4.00(2)	$ 6,540.00(2)
92	02317	Excavation Around Obstructions	CY	400	$30.00(2)	$ 12,000.00(2)
93	02317	Extra Hand Excavation	CY	300	$15.00(2)	$ 4,500.00(2)
94	02317	Extra Machine Excavation	CY	100	$20.00(2)	$ 2,000.00(2)
95	02317	Extra Placement of Backfill Material	CY	200	$6.00(2)	$ 1,200.00(2)
96	02511	Extra 42-inch diameter cylinder pipe angle adapters	EA	4	$4,000.00(2)	$ 16,000.00(2)
97	02511	Extra 42-inch Water fittings in Place	EA	4	$4,000.00(2)	$ 16,000.00(2)
98	02501	Extra ductile iron compact fittings in place	TON	2	$2,000.00(2)	$ 2,000.00(2)
TOTAL EXTRA UNIT PRICES						**$ 60,240.00**(2)

REST OF PAGE INTENTIONALLY LEFT BLANK

D. CASH ALLOWANCE TABLE:

Item No.	Spec Ref.	Cash Allowance Short Title	Cash Allowance in figures (1)
99	01110	Street Cut Permit Fee	$2,500.00
100	01110	Street Lighting	$20,000
101	01110	Utility Pole Relocation	$15,000
TOTAL CASH ALLOWANCES			$37,500.00

REST OF PAGE INTENTIONALLY LEFT BLANK

E. ALTERNATES TABLE:

Item No.	Spec Ref.	Alternate Short Title	Unit of Measure	Estimated Quantity	Unit Price (this column controls)	Total Price for Alternate in figures
		N/A				
TOTAL ALTERNATES						$_____

REST OF PAGE INTENTIONALLY LEFT BLANK

F. TOTAL BID PRICE: **$**_____
(Add Totals for Items A., B., C., D., and E. above)

2.0 SIGNATURES: By signing this Document, I agree that I have received and reviewed all Addenda and considered all costs associated with the Addenda in calculating the Total Bid Price.

Bidder: _____
(Print or type full name of your proprietorship, partnership, corporation, or joint venture.*)

**By: _____
Signature Date

Name: _____
(Print or type name) Title

Address: _____
(Mailing)

_____
(Street, if different)

Telephone and Fax Number: _____
(Print or type numbers)

* If Bid is a joint venture, add additional Bid Form signature sheets for each member of the joint venture.

** Bidder certifies that the only person or parties interested in this offer as principals are those named above. Bidder has not directly or indirectly entered into any agreement, participated in any collusion, or otherwise taken any action in restraint of free competitive bidding.

Note: This document constitutes a government record, as defined by § 37.01 of the Texas Penal Code. Submission of a false government record is punishable as provided in § 37.10 of the Texas Penal Code.

Footnotes for Tables B through E:
(1) Fixed Unit Price determined prior to Bid. Cannot be adjusted by the Bidder.
(2) Minimum Bid Price determined prior to Bid. Can be increased by the Bidder by crossing out the Minimum and noting revised price on the line above.
(3) Maximum Bid Price determined prior to Bid. Can be decreased but not increased by Bidder by crossing out the Maximum and noting revised price on the line above. A Bid that increases the Maximum Bid Price may be found non-conforming and non-responsive.
(4) Fixed Range Bid Price determined prior to Bid. Unit Price can be adjusted by Bidder to any amount within the range defined by crossing out prices noted and noting revised price on the line above.

Document 00430

BIDDER'S BOND

THAT WE, _____, as Principal,
(Bidder)
("Bidder"), and the other subscriber hereto, _____, as Surety, do hereby acknowledge ourselves to be held and firmly bound to the City of Houston, a municipal corporation, in the sum of _____ Dollars ($_____) (an amount equal to 10 percent of the Total Bid Price, including Cash Allowances and Alternates, if any, for the payment of which sum, well and truly to be made to the City of Houston and its successors, the Bidder and Surety do bind themselves, their heirs, executors, administrators, successors, and assigns, jointly and severally.

THE CONDITIONS OF THIS OBLIGATION ARE SUCH THAT:

WHEREAS, the Bidder has submitted on or about this day a proposal offering to perform the following:

_____

_____
(Project Name, Location and Number)
in accordance with the Drawings, Specifications, and terms and conditions related thereto to which reference is hereby made.

NOW, THEREFORE, if the Bidder's offer as stated in the Document 00410 – Bid Form is accepted by the City, and the Bidder executes and returns to the City Document 00520 – Agreement, required by the City, on the forms prepared by the City, for the Work and also executes and returns the same number of the Performance, Payment and Maintenance Bonds (such bonds to be executed by a Corporate Surety authorized by the State Board of Insurance to conduct insurance business in the State of Texas, and having an underwriting limitation in at least the amount of the bond) and other submittals as required by Document 00495 - Post-Bid Procedures, in connection with the Work, within the Contract Time, then this obligation shall become null and void; otherwise it is to remain in full force and effect.

If Bidder is unable to or fails to perform the obligations undertaken herein, the undersigned Bidder and Surety shall be liable to the City for the full amount of this obligation which is hereby acknowledged as the amount of damages which will be suffered by the City on account of the failure of such Bidder to perform such obligations, the actual amount of such damages being difficult to ascertain.

Notices required or permitted hereunder shall be in writing and shall be deemed delivered when actually received or, if earlier, on the third day following deposit in a United States Postal Service post office or receptacle, with proper postage affixed (certified mail, return receipt requested), addressed to the respective other Party at the address prescribed in the Contract documents, or at such other address as the receiving Party may hereafter prescribe by written notice to the sending Party.

IN WITNESS THEREOF, the Bidder and Surety have signed and sealed this instrument on the respective dates written below their signatures and have attached current Power of Attorney.

ATTEST, SEAL: (if a corporation)
WITNESS: (if not a corporation)

By: _____
Name:
Title:

ATTEST/SURETY WITNESS: (SEAL)

By: _____
Name:
Title:
Date:

_____
(Name of Bidder)

By: _____
Name:
Title:
Date:

_____
(Full Name of Surety)

_____
(Address of Surety for Notice)

_____

_____
(Telephone Number of Surety)

By: _____
Name:
Title:
Date:

END OF DOCUMENT

Document 00450

BIDDER'S STATEMENT OF MWBE/PDBE/DBE/SBE STATUS

This certifies that the status of the Bidder, _____, in
(Bidder's Name)
regard to the City of Houston Code of Ordinances, Chapter 15, Article V, relating to City-wide percentage goals for contracting with Minority and Women-owned Business Enterprises (MWBE) and Disadvantaged Business Enterprises (DBE), Chapter 15, Article VI, relating to City-wide percentage goals for contracting with Persons with Disabilities Business Enterprises (PDBE) and Chapter 15, Article IX, relating to City-wide percentage goals for contracting with a Small Business Enterprise (SBE) is as follows:

1. Bidder (individual, partnership, corporation) is [__] is not [__] a Minority Business Enterprise as certified by the Affirmative Action and Contract Compliance Division.

2. Bidder (individual, partnership, corporation) is [__] is not [__] a Women-owned Business Enterprise as certified by the Affirmative Action and Contract Compliance Division.

3. Bidder (individual, partnership, corporation) does [__] does not [__] declare itself to be a Persons with Disabilities Business Enterprise as defined above.

4. Bidder (individual, partnership, corporation) does [__] does not [__] declare itself to be a Disadvantaged Business Enterprise as defined above.

5. Bidder (individual, partnership, corporation) does [__] does not [__] declare itself to be a Small Business Enterprise as defined above.

Signature: _____

Title: _____

Date: _____

END OF DOCUMENT

Document 00452
Form A
CONTRACTOR SUBMISSION LIST
CITY OF HOUSTON FAIR CAMPAIGN ORDINANCE

The City of Houston Fair Campaign Ordinance makes it unlawful for a Contractor to offer any contribution to a candidate for City elective office (including elected officers-elect) during a certain period of time prior to and following the award of the Contract by the City Council. The term "Contractor" includes proprietors of proprietorships, partners or joint venturers having an equity interest of 10 percent or more for the partnership or joint venture, and officers, directors and holders of 10 percent or more of the outstanding shares of corporations. Submission of a statement disclosing the names and business addresses of each of those persons is required with each Bid/Proposal for a City Contract. See Chapter 18 of the City of Houston Code of Ordinances for further information.

This list is submitted under the provisions of Section 18-36(b) of the City of Houston Code of Ordinances in connection with the attached Bid/Proposal of:

Firm or Company Name: _____

Firm or Company Address: _____

The firm/company is organized as indicated below. Check one as applicable and attach additional pages if needed to supply the required names and addresses.

[ ] SOLE PROPRIETOR

Name _____ _____
Proprietor Address

[ ] A PARTNERSHIP

LIST EACH PARTNER HAVING EQUITY INTEREST OF 10% OR MORE OF PARTNERSHIP (IF NONE STATE "NONE")

Name _____ _____
Partner Address

Name _____ _____
Partner Address

[ ] A CORPORATION

LIST ALL DIRECTORS OF THE CORPORATION (IF NONE STATE "NONE")

Name _____ _____
Director Address

Name _____ _____
Director Address

Name _____ _____
Director Address

LIST ALL OFFICERS OF THE CORPORATION (IF NONE STATE "NONE")

Name _____ _____
Officer Address

Name _____ _____
Officer Address

Name _____ _____
Officer Address

LIST ALL INDIVIDUALS OWNING 10% OR MORE OF OUTSTANDING SHARES OF STOCK OF THE CORPORATION (IF NONE STATE "NONE")

Name _____ _____
Owner Address

Name _____ _____
Owner Address

Name _____ _____
Owner Address

I certify that I am duly authorized to submit this list on behalf of the firm, that I am associated with the firm in the capacity noted below, and that I have knowledge of the accuracy of the information provided herein.

_____
Signature

_____
Printed Name

_____
Title

Note: This list constitutes a government record as defined by § 37.01 of the Texas Penal Code.

END OF DOCUMENT

Document 00453

BIDDER'S STATEMENT OF RESIDENCY

The City may not award a contract for general construction, services, or purchases to a Nonresident Bidder unless Nonresident's Bid is lower than the lowest Bid submitted by a responsible Texas Resident Bidder by the same amount that a Texas Resident bidder would be required to underbid the Nonresident Bidder to obtain a comparable contract in the state in which Nonresident's principle place of business is located.

1. This certifies that the Bidder, _____, is a State of Texas Resident Bidder as defined in TEX. GOVT. CODE ANN. § 2252.001(4) (Vernon 1994).

_____ _____
Signature Title

"Texas Resident Bidder" means a bidder whose principal place of business is in this State, and includes a Contractor whose ultimate parent company or majority owner has its principal place of business in this State. *When bidder cannot sign 1, above, proceed to 2.*

2. a. _____ is a resident of _____ and is a Nonresident Bidder as defined in TEX. GOVT. CODE ANN. § 2252.001(3) (Vernon 1994).

_____ _____
Signature Title

"Nonresident Bidder" means a bidder whose principal place of business is not in this State, but excludes a contractor whose ultimate parent company or majority owner has its principal place of business in this State.

b. The State of _____ _____ have a state statute giving
Bidder's resident state Does or Does Not
preference to resident bidders.

_____ _____
Signature Title

If the answer to 2.b is that your state does have a statute giving preference to resident bidders, then you must provide a copy and proceed to 3.

3. A copy of the State of _____ statute is attached.

_____ _____
Signature Title

_____
Date

END OF DOCUMENT

Document 00454

AFFIDAVIT OF NON-INTEREST

BEFORE ME, the undersigned authority, a Notary Public in and for the State of Texas, on this day personally appeared _____, who
Affiant
being by me duly sworn on his oath stated that he is _____, of
Title
_____,
Name of Firm
the firm named and referred to and in the foregoing; and that he knows of no officer, agent, or employee of the City of Houston being in any manner interested either directly or indirectly in such Contract.

_____
Affiant's Signature

SWORN AND SUBSCRIBED before me on _____.
Date

_____
Notary Public in and for the State of TEXAS

_____
Print or type name

My Commission Expires: _____
Expiration Date

END OF DOCUMENT

ORIG. DEPT.: DEPARTMENT OF PUBLIC WORKS AND ENGINEERING **FILE/I.D. NO.:** S-000900-0111-4

INSTRUCTION: ENTITIES USING AN ASSUMED NAME SHOULD DISCLOSE SUCH FACT TO AVOID REJECTION OF THE AFFIDAVIT. THE FOLLOWING FORMAT IS RECOMMENDED: CORPORATE/LEGAL NAME DBA ASSUMED NAME.

STATE OF _____ §
§ **AFFIDAVIT OF OWNERSHIP OR CONTROL**
COUNTY OF _____ §

BEFORE ME, the undersigned authority, on this day personally appeared _____ [***FULL NAME***] (hereafter "Affiant"), _____ [***STATE TITLE/CAPACITY WITH CONTRACTING ENTITY***] of _____ [***CONTRACTING ENTITY'S CORPORATE/LEGAL NAME***] ("Contracting Entity"), who being by me duly sworn on oath stated as follows:

1. Affiant is authorized to give this affidavit and has personal knowledge of the facts and matters herein stated.

2. Contracting Entity seeks to do business with the City in connection with _____ _____ [***DESCRIBE PROJECT OR MATTER***] which is expected to be in an amount that exceeds $50,000.

3. The following information is submitted in connection with the proposal, submission or bid of Contracting Entity in connection with the above described project or matter.

4. Contracting Entity is organized as a business entity as noted below (check box as applicable).

FOR PROFIT ENTITY:	**NON-PROFIT ENTITY**:
[ ] SOLE PROPRIETORSHIP	[ ] NON-PROFIT CORPORATION
[ ] CORPORATION	[ ] UNINCORPORATED ASSOCIATION
[ ] PARTNERSHIP	
[ ] LIMITED PARTNERSHIP	
[ ] JOINT VENTURE	
[ ] LIMITED LIABILITY COMPANY	
[ ] OTHER (Specify type in space below)	

_____

_____

_____

5. The information shown below is true and correct for the Contracting Entity and all owners of 5% or more of the Contracting Entity and, where the Contracting Entity is a non-profit entity, the required information has been shown for each officer, *i.e.*, president, vice-president, secretary, treasurer, etc. ***[NOTE: IN ALL CASES, USE FULL NAMES, LOCAL BUSINESS AND RESIDENCE ADDRESSES AND TELEPHONE NUMBERS. DO NOT USE POST OFFICE BOXES FOR ANY ADDRESS. INCLUSION OF E-MAIL ADDRESSES IS OPTIONAL, BUT RECOMMENDED. ATTACH ADDITIONAL SHEETS AS NEEDED.]***

Contracting Entity

Name: _____

Business Address *[NO./STREET]* _____

[CITY/STATE/ZIP CODE] _____

Telephone Number (_____)_____

Email Address ***[OPTIONAL]*** _____

Residence Address *[NO./STREET]* _____

[CITY/STATE/ZIP CODE] _____

Telephone Number (_____)_____

Email Address ***[OPTIONAL]*** _____

5% Owner(s) or More (IF NONE, STATE "NONE.")

Name: _____

Business Address *[NO./STREET]* _____

[CITY/STATE/ZIP CODE] _____

Telephone Number (_____)_____

Email Address ***[OPTIONAL]*** _____

Residence Address *[NO./STREET]* _____

[CITY/STATE/ZIP CODE] _____

Telephone Number (_____)_____

Email Address ***[OPTIONAL]*** _____

6. ***Optional Information***

Contracting Entity and/or _____ [***NAME OF OWNER OR NON-PROFIT OFFICER***] is actively protesting, challenging or appealing the accuracy and/or amount of taxes levied against _____ [***CONTRACTING ENTITY, OWNER OR NON-PROFIT OFFICER***] as follows:

Name of Debtor: _____

Tax Account Nos. _____

Case or File Nos. _____

Attorney/Agent Name _____

Attorney/Agent Phone No. (_____)_____

Tax Years _____

Status of Appeal ***[DESCRIBE]*** _____

_____

_____

_____

Affiant certifies that he or she is duly authorized to submit the above information on behalf of the Contracting Entity, that Affiant is associated with the Contracting Entity in the capacity noted above and has personal knowledge of the accuracy of the information provided herein, and that the information provided herein is true and correct to the best of Affiant's knowledge and belief.

_____
Affiant

SWORN TO AND SUBSCRIBED before me this _____ day of _____, 20_____.

(Seal)

_____
Notary Public

NOTE:
This affidavit constitutes a **government record** as defined by Section 37.01 of the Texas Penal Code. Submission of a false government record is punishable as provided in Section 37.10 of the Texas Penal Code. Attach additional pages if needed to supply the required names and addresses.

END OF DOCUMENT

Document 00457

Conflict of Interest Questionnaire

Local Government Code Chapter 176 requires Bidders with the City of Houston ("City") to file a Conflict of Interest Questionnaire with the City Secretary of the City of Houston.

The Conflict of Interest Questionnaire is available for downloading on the Texas Ethics Commission's website at: http://www.ethics.state.tx.us/forms/CIQ.pdf. The completed Conflict of Interest Questionnaire will be posted on the City Secretary's website. Also you will find a list of the City Local Government Officers on the City Secretary's website.

For your convenience the CIQ form is attached as part of this document. Although the City has provided this document for the Bidders convenience, it is the Bidders responsibility to submit the latest version of the CIQ form as promulgated by the Texas Ethics Commission.

The Failure of any Bidder to comply with this law is a Class C misdemeanor.

END OF DOCUMENT

CONFLICT OF INTEREST QUESTIONNAIRE

FORM CIQ

For vendor or other person doing business with local governmental entity

This questionnaire reflects changes made to the law by H.B. 1491, 80th Leg., Regular Session.

This questionnaire is being filed in accordance with Chapter 176, Local Government Code by a person who has a business relationship as defined by Section 176.001(1-a) with a local governmental entity and the person meets requirements under Section 176.006(a).

By law this questionnaire must be filed with the records administrator of the local governmental entity not later than the 7th business day after the date the person becomes aware of facts that require the statement to be filed. *See* Section 176.006, Local Government Code.

A person commits an offense if the person knowingly violates Section 176.006, Local Government Code. An offense under this section is a Class C misdemeanor.

OFFICE USE ONLY

Date Received

1 **Name of person who has a business relationship with local governmental entity.**

2 ☐ **Check this box if you are filing an update to a previously filed questionnaire.**

(The law requires that you file an updated completed questionnaire with the appropriate filing authority not later than the 7th business day after the date the originally filed questionnaire becomes incomplete or inaccurate.)

3 **Name of local government officer with whom filer has employment or business relationship.**

_____

Name of Officer

This section (item 3 including subparts A, B, C & D) must be completed for each officer with whom the filer has an employment or other business relationship as defined by Section 176.001(1-a), Local Government Code. Attach additional pages to this Form CIQ as necessary.

A. Is the local government officer named in this section receiving or likely to receive taxable income, other than investment income, from the filer of the questionnaire?

☐ Yes ☐ No

B. Is the filer of the questionnaire receiving or likely to receive taxable income, other than investment income, from or at the direction of the local government officer named in this section AND the taxable income is not received from the local governmental entity?

☐ Yes ☐ No

C. Is the filer of this questionnaire employed by a corporation or other business entity with respect to which the local government officer serves as an officer or director, or holds an ownership of 10 percent or more?

☐ Yes ☐ No

D. Describe each employment or business relationship with the local government officer named in this section.

4

_____ _____

Signature of person doing business with the governmental entity Date

Adopted 06/29/2007

Document 00459

CONTRACTOR'S STATEMENT REGARDING PREVIOUS CONTRACTS SUBJECT TO EQUAL EMPLOYMENT OPPORTUNITY

Section 60-1.7(b) of the Regulations of the Secretary of Labor requires each bidder or prospective prime contractor and proposed subcontractor, where appropriate, to state in the bid or at the outset of negotiations for the contract whether it has participated in any previous contract or subcontract subject to the equal opportunity clause; and if so, whether it has filed with the Joint Reporting Committee, the Director, an agency, or the former President's Committee on Equal Employment Opportunity all reports due under the applicable filing requirements. In any case in which a bidder or prospective prime contractor or proposed subcontractor which participated in a previous contract subject to Executive Order 10925, 11114. or 11246 has not filed a report due under the applicable filing documents, no contract or subcontract shall be awarded unless such contractor submits a report covering the delinquent period or such other period specified by the FAA or the Director, OFCCP.

Contractor has __ has not __ participated in a previous contract subject to the equal opportunity clause prescribed by Executive Order 10925, or Executive Order 11114, or Executive Order 11246.

Contractor has __ has not __ submitted all compliance reports in connection with any such contract due under the applicable filing requirements; and that representations indicating submission of required compliance reports signed by proposed subcontractors will be obtained prior to award of subcontracts.

If Contractor has participated in a previous contract subject to the equal opportunity clause and has not submitted compliance reports due under applicable filing requirements, Contractor (Proposer) shall submit a compliance report on Standard Form 100, "Employee Information Report EEO-1" prior to the award of the Contract.

Standard Form 100 is normally furnished to contractors annually, based on a mailing list currently maintained by the Joint Reporting Committee. In the event Contractor has not received the form, Contractor may obtain it by writing to the following address:

Joint Reporting Committee
1800 G Street
Washington, DC 20506

_____
(Printed or typed Name of Signatory)

_____ _____
Signature Date

_____
Title

_____
Contractor's Firm Name

NOTE: The penalty for making false statements in offers is prescribed in 18 U.S.C. 1001.

END OF DOCUMENT

Document 00460
(POP -1)
City of Houston
Pay or Play Program
Acknowledgement Form

It has been determined that the project currently open for bidding meets the criteria of the City of Houston Pay or Play program. This form acknowledges your awareness of the Pay or Play program which is authorized by Ordinance 2007-534. Your signature below affirms that you will comply with the requirements of the program if you are the successful bidder/proposer, and ensure the same on behalf of subcontracts subject to the Pay or Play Program.

I declare under penalty of perjury under the laws of the State of Texas that if awarded this contract which meets the criteria for the City of Houston's Pay or Play Program, I will comply with all requirements of the Pay or Play Program in accordance with Executive Order 1-7.

***Fill out all information below and submit this form with your bid/proposal packet.**

_____
Solicitation Number

_____ _____
Signature Date

_____ _____
Print Name City Vendor ID

_____ _____
Company Name Phone Number

_____
Email Address

Note: For more information contact your POP Liaison or the POP Contract Administrator. All contact information can be found on www.houstontx.gov →Departments→Office of Business Opportunity→Pay or Play.

Document 00495

POST-BID PROCEDURES

1. DOCUMENT ADDRESSES

   A. Notice of Intent to Award

   B. Monitoring Authority

   C. Requirements of Bidder

   D. Failure of Bidder to comply with requirements

   E. Notice to Proceed

2. NOTICE OF INTENT TO AWARD

   A. The City will provide written Notice of Intent to Award to Low Bidder.

3. DEFINITIONS

   A. The “Monitoring Authority” for this Project is:

      Director, Mayor’s Office of Business Opportunity
      City of Houston
      611 Walker Street, 7th Floor
      Houston, Texas 77002

4. REQUIREMENTS OF BIDDER

   A. Within10 days of receipt of Notice of Intent to Award, Low Bidder shall execute and deliver to Arthur C. Morris, P.E., Project Manager and Monitoring Authority, for the City's approval, documents indicated by an "X" below:
      [X] Document 00600 - List of Proposed Subcontractors and Suppliers, Part A – MWBE/PDBE/DBE/SBE Participation Plan
      [X] Executed Subcontract(s), Letter(s) of Intent, or documentation of good faith efforts to meet the MWBE/PDBE/DBE/SBE goals

   B. Within 10 days of receipt of Notice of Intent to Award, Low Bidder shall execute and deliver to Arthur C. Morris, P.E., Project Manager for the City's approval, documents indicated by an "X" below:
      [X] Document 00501 - Resolution of Contractor
      [X] Document 00520 - Agreement

[X] Document 00600 - List of Proposed Subcontractors and Suppliers, Part B - Schedule of Non-MWBE/PDBE/DBE/SBE Subcontractors and Suppliers
[X] Document 00601 - Drug Policy Compliance Agreement
[X] Document 00602 - Contractor's Drug-free Workplace Policy *(Contractor creates this document.)*
[X] Document 00604 - History of OSHA Actions and List of On-the-job Injuries
[X] Document 00605 - List of Safety Impact Positions *(Contractor completes this list. Do not submit if submitting Document 00606.)*
[ ] Document 00606 - Contractor's Certification of No Safety Impact Positions *(Do not submit if submitting Document 00605.)*
[ ] Document 00607 - Certification Regarding Debarment, Suspension, and Other Responsibility Matters
[ ] Document 00608 - Contractor's Certification Regarding Non-segregated Facilities for Project Funded by AIP Grant
[X] Document 00610 - Performance Bond
[X] Document 00611 - Statutory Payment Bond
[X] Document 00612 - One-year Maintenance Bond
[X] Document 00613 - One-year Surface Correction Bond
[X] Document 00620 - Affidavit of Insurance *(with Certificate of Insurance attached)*
[X] Document 00622 - Name and Qualifications of Proposed Superintendent *(Contractor creates this document.)*
[ ] Document 00623 - Contractor's Act of Assurance (SRF Form ED-103)
[X] Document 00624 - Affidavit of Compliance with Affirmative Action Program
[ ] Document 00626 - SRF Affirmative Steps Solicitation Report
[ ] Document 00627 - SRF Prime Contractor Affirmative Steps Certification and Goals
[ ] Document 00629 - Affidavit for FAA Form 7460-1
[X] Document 00630 – (POP-2) Certification of Compliance with Pay or Play Program
[X] Document 00631 – (POP-3) City of Houston Pay or Play Program – List of Subcontractors
[ ] Document 00809 – CDBG Requirements for Federally Funded Projects

C. Within 10 days of receipt of Notice of Intent to Award, Low Bidder shall execute the following forms and deliver them directly to the Monitoring Authority.

[X] Document 00805, EEO-3 - Certification by Bidder Regarding Equal Employment Opportunity
[X] Document 00805, EEO-6 - Total Work Force Composition of the Company
or in lieu thereof, a copy of the latest Equal Employment Opportunity Commission's EEO-1 form (This information is required only if the

Contractor has a work force of 50 or more people and the Contract is $50,000 or more.)

[X] Document 00805, EEO-7 - Company's Equal Employment Opportunity Compliance Program

[X] Document 00820 or 00821, Exhibit "B" - Certificate from Contractor Appointing Officer or Employee to Supervise Payment of Employees

D. Designations of Subcontractors and Suppliers, who have been selected by Bidder in Part B - Schedule of Non-MWBE/PDBE/DBE/SBE Subcontractors and Suppliers of Document 00600 - List of Proposed Subcontractors and Suppliers, and accepted by the City, may be changed only with prior notice and acceptance by Project Manager as provided in Conditions of the Contract.

E. On Bidder's written request, Arthur C. Morris, P.E., Project Manager may grant an extension of time, not to exceed 5 days, to furnish documents specified in Paragraphs 4.0.A and 4.0.B. If Bidder is required to resubmit documents specified in Paragraph 4.0.A or 4.0.B, Bidder shall do so within time limits provided in the request for resubmission.

F. Designations of Subcontractors and Suppliers, who have been selected by Bidder in its Participation Plan, and accepted by the City, may be changed only with prior notice and acceptance by the Monitoring Authority as provided in Document 00808 - Minority and Women-owned Business Enterprise (MWBE), Persons with Disabilities Business Enterprise (PDBE) and Small Business Enterprise (SBE) Program.

5. FAILURE OF BIDDER TO COMPLY WITH REQUIREMENTS

A. Should Bidder, on receipt of Notice of Intent to Award, fail to comply with requirements of this Document 00495 within stated time, the City may declare award in default and require forfeiture of the Security Deposit.

B. After the City's written notice of default to Low Bidder, the City may award the Contract to Bidder whose offer is the next lowest bid, and Security Deposit of Bidder in default shall be forfeited to the City in accordance with provisions of Document 00200 - Instructions to Bidders.

6. NOTICE TO PROCEED

A. Upon the City's execution of the Agreement and delivery to Contractor, City Engineer will give Document 00551 - Notice to Proceed to Contractor, which establishes Date of Commencement of the Work.

END OF DOCUMENT

Document 00501

RESOLUTION OF CONTRACTOR

_____ ("Contractor"),
(Name of Contractor, e.g., "Biz. Inc.", "Biz LLP")

is a _____,
(Type of Organization, e.g.: Corporation, Limited Partnership, Limited Liability Partnership, Limited Liability Company, etc.)

which is bound by acts of _____,
(Name and Form of Governing Entity, e.g., "Biz Inc. Board of Directors", "Bill Smith, GP", etc.)

("Governing Entity").

On the _____ day of _____, 20_____, the Governing Entity resolved, in accordance with all documents, rules, and laws applicable to the Contractor, that _____, is authorized to act as the
(Contractor's Representative)

Contractor's Representative in all business transactions (initial one) ___ conducted in the State of Texas OR ___ related to this Contract; and

The Governing Entity warrants that the above resolution (a) was entered into without dissent or reservation by the Governing Entity, (b) has not been rescinded or amended, and (c) is now in full force and effect; and

In authentication of the adoption of this resolution, I subscribe my name on this ___ day of _____, 20___.

_____ _____
(Authorized Signature for Governing Entity) (Print or Type Name and Title of Authorized Signatory)

SWORN AND SUBSCRIBED before me on _____
Date

_____
Notary Public in and for the State of Texas

My Commission Expires: _____ _____
Expiration Date Print or Type Name of Notary Public

Document 00520

AGREEMENT

Project: Proposed 42-Inch Water Line along Sandpiper Dr. Lundington Dr Pembridge Dr and W. Bellfort from W. Aiport to Braes Forest Road.

Project Location: Along Sandpiper Dr, Ludington Dr, Pembridge Dr and W. Bellfort, from W. Airport Blvd to Braes Forest Dr (Key Map No. 570C, D & H)

Project No: WBS No. S-000900-0111-4

The City: THE CITY OF HOUSTON, 900 Bagby Street, Houston, Texas 77002 (the "City")

and

Contractor: _____

(Address for Written Notice) _____

_____

_____

Fax Number: _____ **Phone Number:** _____

City Engineer, with respect to Sections 4.3 thru 4.5 of the General Conditions, is:

James T. Lincoln, P.E. (or his successor)

P. O. Box 1562, Houston, Texas 77251-1562 (Address for Written Notice)

Fax Number: 832-394-9622

City Engineer, with respect to all other terms of the General Conditions, is:

Daniel R. Menendez, P.E. (or his successor)

Fax Number: 832-395-2254

THE CITY AND CONTRACTOR AGREE AS FOLLOWS:

ARTICLE 1
THE WORK OF THE CONTRACT

1.1 Contractor shall perform the Work in accordance with the Contract.

ARTICLE 2
CONTRACT TIME

2.1 Contractor shall achieve Date of Substantial Completion within 270 days after Date of Commencement of the Work, subject to adjustments of Contract Time as provided in the Contract.

2.2 The Parties recognize that time is of the essence for this Agreement and that the City will suffer financial loss if the Work is not completed within the Contract Time. Parties also recognize delays, expense, and difficulties involved in proving in a legal or arbitration proceeding actual loss suffered by the City if the Work is not completed on time. Accordingly, instead of requiring any such proof, the Parties agree that as liquidated damages for delay (but not as a penalty), Contractor shall pay the City the amount stipulated in Document 00800 – Supplementary Conditions, for each day beyond Contract Time.

ARTICLE 3
CONTRACT PRICE

3.1 Subject to terms of the Contract, the City will pay Contractor in current funds for Contractor's performance of the Contract, Contract Price of $ which includes Alternates, if any, accepted below.

3.2 The City accepts Alternates as follows:

Alternate No. 1 [*Accepted or Not Accepted*]
Alternate No. 2 [*Accepted or Not Accepted*]
Alternate No. 3 [*Accepted or Not Accepted*]
Alternate No. 4 [*Accepted or Not Accepted*]

ARTICLE 4
PAYMENTS

4.1 The City will make progress payments to Contractor as provided below and in Conditions of the Contract.

4.2 The Period covered by each progress payment is one calendar month ending on the [___] 10th, [___] 20th, or [___] last day of the month.

4.3 The City will issue Certificates for Payment and will make progress payments on the basis of such Certificates as provided in Conditions of the Contract.

4.4 Final payment, constituting entire unpaid balance of Contract Price, will be made by the City to Contractor as provided in Conditions of the Contract.

ARTICLE 5
CONTRACTOR REPRESENTATIONS

5.1 Contractor represents:

5.1.1 Contractor has examined and carefully studied Contract documents and other related data identified in the Request For Competitive Sealed Proposals or Competitive Sealed Bids.

5.1.2 Contractor has visited the site and become familiar with and is satisfied as to general, local, and site conditions that may affect cost, progress, and performance of the Work.

5.1.3 Contractor is familiar with and is satisfied as to all federal, state, and local laws and regulations that may affect cost, progress, and performance of the Work.

5.1.4 Contractor has carefully studied all: (1) reports of explorations and tests of subsurface conditions at or contiguous to the site and all drawings of physical conditions in or relating to existing surface or subsurface structures at or contiguous to the site (except Underground Facilities) which have been identified in Contract documents and (2) reports and drawings of a hazardous environmental condition, if any, at the site which has been identified in Contract documents.

5.1.5 Contractor has obtained and carefully studied (or assumes responsibility for having done so) all additional or supplementary examinations, investigations, explorations, tests, studies, and data concerning conditions (surface, subsurface, and Underground Facilities) at or contiguous to the site which may affect cost, progress, or performance of the Work or which relate to any aspect of the means, methods, techniques, sequences, and procedures of construction to be employed by Contractor, including applying specific means, methods, techniques, sequences, and procedures of construction, if any, expressly required by the Contract to be employed by Contractor, and safety precautions and programs incident thereto

5.1.6 Contractor does not consider that any further examinations, investigations, explorations, tests, studies, or data are necessary for performance of the Work at Contract Price, within Contract Time, and in accordance with the Contract.

5.1.7 Contractor is aware of general nature of work to be performed by the City and others at the site that relates to the Work as indicated in Contract documents.

5.1.8 Contractor has correlated information known to Contractor, information and observations obtained from visits to the site, reports and drawings identified in the Contract, and all additional examinations, investigations, explorations, tests, studies, and data with the Contract.

5.1.9 Contractor has given City Engineer written notice of all conflicts, errors, ambiguities, or discrepancies that Contractor has discovered in the Contract, and written resolution thereof by City Engineer is acceptable to Contractor.

5.1.10 Contract documents are generally sufficient to indicate and convey understanding of all terms and conditions for performance and furnishing of the Work.

ARTICLE 6
MISCELLANEOUS PROVISIONS

6.1 The Contract may be terminated by either Party as provided in Conditions of the Contract.

6.2 The Work may be suspended by the City as provided in Conditions of the Contract.

ARTICLE 7
ENUMERATION OF CONTRACT DOCUMENTS

7.1 The following documents are incorporated into this Agreement:

7.1.1 Document 00700 - General Conditions.

7.1.2 Document 00800 - Supplementary Conditions.

7.1.3 General Requirements.

7.1.4 Divisions 02 through 16 of Specifications.

7.1.5 Drawings listed in Document 00015 - List of Drawings. Drawing No. _____ and bound separately.

7.1.6 Addenda [and Riders] which apply to the Contract, are as follows:

Addendum No. 1, dated None

Addendum No. 2, dated None

Addendum No. 3, dated None

Rider No. [___], dated None

7.1.7 Other documents:

	Document No.	Title
[X]	00410B	Proposal Form – Part B
[X]	00501	Resolution of Contractor
[ ]	00608	Contractor's Certification Regarding Non-Segregated Facilities for Project Funded by AIP Grant
[X]	00610	Performance Bond
[X]	00611	Statutory Payment Bond
[X]	00612	One-year Maintenance Bond
[X]	00613	One-year Surface Correction Bond
[X]	00620	Affidavit of Insurance (with the Certificate of Insurance attached)
[ ]	00623	Contractor's Act of Assurance (SRF Form ED-103)
[X]	00624	Affidavit of Compliance with Affirmative Action Program
[ ]	00628	Affidavit of Compliance with Disadvantaged Business Enterprise (DBE) Program for Project Funded By AIP Grant
[X]	00630	(POP-2) Certification of Compliance with Pay or Play Program
[X]	00631	(POP-3) Pay or Play Program List of Subcontractors
[ ]	00801	Supplementary Conditions for Project AIP Funded
[ ]	00802	SRF Supplementary Conditions
[ ]	00803	Work Order Supplementary Conditions
[X]	00805	Equal Employment Opportunity Program Requirements
[X]	00808	Minority and Women-owned Business Enterprise (MWBE) & Persons with Disabilities Business Enterprise (PDBE) Program
[ ]	00812	Federal Wage Rate – Heavy
[X]	00820	Wage Rate for Engineering Construction
[ ]	00821	Wage Rate for Building Construction
[X]	00830	Trench Safety Geotechnical Information
[X]	00840	Pay or Play Program Requirements
[ ]	00912	Rider

ARTICLE 8
SIGNATURES

8.1 This Agreement is executed in two original copies and is effective as of the date of countersignature by City Controller.

CONTRACTOR:

By: _____
Name: _____
Title: _____
Date: _____
Tax Identification Number: _____

(If Joint Venture)

By: _____
Name: _____
Title: _____
Date: _____
Tax Identification Number: _____

CITY OF HOUSTON, TEXAS

APPROVED:

By: _____
Director,
Department of Public Works and Engineering

SIGNED:

By: _____
Mayor

COUNTERSIGNED:

By: _____
City Controller

Date Countersigned:

ATTEST/SEAL:

By: _____
City Secretary

8.2 This Contract and Ordinance have been reviewed as to form by the undersigned legal assistant and have been found to meet established Legal Department criteria. Legal Department has not reviewed the content of these documents.

_____ _____
Legal Assistant Date

END OF DOCUMENT

Document 00600

LIST OF PROPOSED SUBCONTRACTORS AND SUPPLIERS - PART A[1]
MWBE/PDBE/DBE/SBE PARTICIPATION PLAN

PROJECT NAME: *42-inch WL from W. Airport to Braes Forest*
ORIG. CONTRACT PRICE: $_____
PROJECT NO.: S-000900-0111-4 PART. AMOUNT: $_____
DATE OF REPORT: _____ PERCENTAGE: _____%
PERCENTAGE MBE: _____%
PERCENTAGE WBE: _____%
PERCENTAGE PDBE: _____%
PERCENTAGE DBE: _____%
PERCENTAGE SBE: _____%

SUBCONTRACTOR OR SUPPLIER[2] (INLCUDE MBE/WBE/PDBE/DBE/SBE DESIGNATION)	**ADDRESS**	**SCOPE OF WORK[3]**	**AGREED PRICE**

NOTES:
1. RETURN PART A FOR PROJECTS WITH A STATED MWBE, PDBE, DBE AND/OR SBE PERCENTAGE GOAL, AS REQUIRED IN DOCUMENT 00800 – SUPPLEMENTARY CONDITIONS. RETURN PART A WITHIN THE SPECIFIED NUMBER OF DAYS AFTER RECEIPT OF NOTICE OF INTENT TO AWARD
2. FIRMS LISTED IN PART A SHALL BE CERTIFIED BY THE CITY AFFIRMATIVE ACTION/ CONTRACT COMPLIANCE DIVISION.
3. DESCRIBE THE WORK TO BE PERFORMED, FOR WHICH THE FIRM IS CERTIFIED, SUCH AS PAVING, ELECTRICAL, ETC.

CONTRACTOR SHALL EXECUTE CONTRACTS WITH APPROVED SUBCONTRACTORS AND SUPPLIERS WITHIN 30 DAYS AFTER THE DATE OF THE NOTICE TO PROCEED.

SIGNATURE: _____ COMPANY NAME: _____

NAME: _____ TITLE: _____
(Type or Print)

END OF DOCUMENT

Document 00600

LIST OF PROPOSED SUBCONTRACTORS AND SUPPLIERS - PART B[1] SCHEDULE OF NON-MWBE/PDBE/DBE/SBE SUBCONTRACTORS AND SUPPLIERS

PROJECT NAME: *42-inch WL from W. Airport to Braes Forest*
DATE OF REPORT: _____
PROJECT NO.: S-000900-0111-4

SUBCONTRACTOR OR SUPPLIER	ADDRESS	SCOPE OF WORK[2]

NOTES: 1. RETURN PART B FOR ALL PROJECTS WITHIN THE SPECIFIED NUMBER OF DAYS AFTER RECEIPT OF NOTICE OF INTENT TO AWARD.
2. DESCRIBE THE WORK TO BE PERFORMED, SUCH AS PAVING, ELECTRICAL, ETC.

CONTRACTOR SHALL EXECUTE CONTRACTS WITH APPROVED SUBCONTRACTORS AND SUPPLIERS WITHIN 30 DAYS AFTER THE DATE OF THE NOTICE TO PROCEED.

SIGNATURE: _____ COMPANY NAME: _____

NAME: _____ TITLE: _____
(Type or Print)

END OF DOCUMENT

Document 00601

DRUG POLICY COMPLIANCE AGREEMENT

I, _____ _____,
Name Title

of _____
Contractor

have authority to bind Contractor with respect to its Bid, Proposal, or performance of any and all contracts it may enter into with the City of Houston; and that by making this Agreement, I affirm that Contractor is aware of and by the time the Contract is awarded will be bound by and agree to designate appropriate safety impact positions for company employee positions, and to comply with the following requirements before the City issues a Notice to Proceed:

1. Develop and implement a written Drug Free Workplace Policy and related drug testing procedures for Contractor that meet the criteria and requirements established by the Mayor's Amended Policy on Drug Detection and Deterrence (Mayor's Drug Policy) and the Mayor's Drug Detection and Deterrence Procedures for Contractors (Executive Order No. 1-31).

2. Obtain a facility to collect urine samples consistent with Health and Human Services (HHS) guidelines and an HHS-certified drug-testing laboratory to perform drug tests.

3. Monitor and keep records of drug tests given and results; and upon request from the City of Houston, provide confirmation of such testing and results.

4. Submit semi-annual Drug Policy Compliance Declarations.

I affirm on behalf of Contractor that full compliance with the Mayor's Drug Policy and Executive Order No. 1-31 is a material condition of the Contract with the City of Houston,

I further acknowledge that falsification, failure to comply with or failure to timely submit declarations or documentation in compliance with the Mayor's Drug Policy or Executive Order No. 1-31 will be considered a breach of the Contract with the City and may result in non-award or termination of the Contract by the City.

_____ _____
Contractor Title

_____ _____
Signature Date

END OF DOCUMENT

Document 00603

CHECKLIST FOR DRUG POLICY SUBMITTAL

TO: **CARLOS MARTINEZ**
PWE/DIRECTOR'S OFFICE
SECURITY MANAGEMENT SECTION
611 WALKER STREET
3RD FLOOR ANNEX
HOUSTON, TEXAS 77002

FROM: **ASSISTANT DIRECTOR**
[*CONTRACTING DIVISION*]
[*CONTRACTING DEPARTMENT*]

DATE: [*Today's Date*]

CONTRACTOR: [*Low Bidder Name*]

PROJECT NAME: Proposed 42-Inch Water Line along Sandpiper Dr. Lundington Dr Pembridge Dr and W. Bellfort from W. Aiport to Braes Forest Road.

PROJECT No.: WBS No. S-000900-0111-4

PROJECT MANAGER: Arthur C. Morris, P.E. **TELEPHONE:** (832) 395-2317 **FAX:** (832) 395-2333

DOCUMENTS CHECKED BELOW ARE BEING SUBMITTED: (Project Manager, check.)

☐ **DOC. 00601 - DRUG POLICY COMPLIANCE AGREEMENT (Standard Form)**

☐ **DOC. 00602 - CONTRACTOR'S DRUG-FREE WORKPLACE POLICY (Contractor creates this Document)**

☐ **DOC. 00605 - LIST OF SAFETY IMPACT POSITIONS (Contractor creates this List)**
"OR"

☐ **DOC. 00606 - CONTRACTOR'S CERTIFICATION OF NO SAFETY IMPACT POSITIONS**

CCODT REVIEW: THE FOLLOWING CHECKED ITEM(S) ARE MISSING FROM SUBMISSION/POLICY AND NEED TO BE CORRECTED PRIOR TO AWARD:

☐ **NAME OF DRUG TESTING LAB**

REASON FOR TESTING:

- ☐ **RANDOM TESTING - 25% ANNUALLY**
- ☐ **REASONABLE SUSPICION**
- ☐ **POST ACCIDENT**

REJECTED	_____
	_____
	_____
APPROVED	_____

☐ **SAFETY IMPACT POSITIONS INCOMPLETE**

☐ **EMPLOYEE ACKNOWLEDGMENT FORM**

☐ **DRUG TESTING PROCEDURES**

☐ **CONSEQUENCE OF POSITIVE TEST:** *PERMANENTLY REMOVED FROM ANY CONTRACT CITY WORKSITE.*

☐ **CONSEQUENCE OF REFUSAL TO CONSENT:** *PERMANENTLY REMOVED FROM ANY CONTRACT CITY WORKSITE.*

☐ **OTHER:** _____

COMMENTS: _____

DATE RECEIVED: _____ **RESUBMITTAL DATE:** _____

END OF DOCUMENT

Document 00604

HISTORY OF OSHA ACTIONS AND LIST OF ON-THE-JOB INJURIES

Prior to award of the Contract, Low Bidder will be required to file the following with the City:

1. A history of all OSHA actions, advisories, etc., Contractor has received on all jobs worked in any capacity, prime or subcontractor. The history shall be for the two-year period preceding the Bid Date of the Project.

2. A list of all on-the-job injuries, accidents, and fatalities suffered by any present or former employees of Contractor during the same two-year period.

3. If less than the two-year period, give the date Contractor started doing business.

This information must be submitted to the City within the time period stated in Document 00498 - Notice of Intent to Award. An officer of the company must certify in a notarized statement that the information submitted is true and correct.

END OF DOCUMENT

Document 00605

LIST OF SAFETY IMPACT POSITIONS

****

Contractor is to provide a complete List of Employee Classifications that are considered in a "Safety Impact Position" and the number of employees in each of those classifications.

****

Employee Classification	**Number of Employees**

END OF DOCUMENT

Document 00606

CONTRACTOR'S CERTIFICATION OF NO SAFETY IMPACT POSITIONS IN PERFORMANCE OF A CITY CONTRACT

BEFORE ME, the undersigned authority, on this day personally appeared

_____,
Affiant

who being by me duly sworn on his oath stated that he is _____
Title

of _____
Contractor

and that no employee safety impact positions, as defined in §5.17 of Executive Order No. 1-31, will be involved in performing _____.
Project

Contractor agrees and covenants that it shall immediately notify the City of Houston Director of Personnel if any safety impact positions are established to provide services in performing this City Contract.

_____
Affiant's Signature

SWORN AND SUBSCRIBED before me on this day of _____, 20___.

_____
Notary Public in and for the State of TEXAS

_____
Print or Type Notary Public Name

My Commission Expires: _____
Expiration Date

END OF DOCUMENT

Document 00610

PERFORMANCE BOND

THAT WE, _____, as Principal, (the "Contractor"), and the other subscriber hereto, _____, as Surety, do hereby acknowledge ourselves to be held and firmly bound to the City of Houston (the "City"), a municipal corporation, in the penal sum of $_____ for the payment of which sum, well and truly to be made to the City, its successors and assigns, Contractor and Surety do bind themselves, their heirs, executors, administrators, successors and assigns, jointly and severally.

THE CONDITIONS OF THIS OBLIGATION ARE SUCH THAT:

WHEREAS, the Contractor has on or about this day executed a Contract in writing with the City for _____

_____,

all of such work to be done as set out in full in said Contract documents therein referred to and adopted by the City Council, all of which are made a part of this instrument as fully and completely as if set out in full herein.

NOW THEREFORE, if the said Contractor shall faithfully and strictly perform the Contract in all its terms, provisions, and stipulations in accordance with its true meaning and effect, and in accordance with the Contract documents referred to therein and shall comply strictly with each and every provision of the Contract and with this Bond, then this obligation shall become null and void and shall have no further force and effect; otherwise the same is to remain in full force and effect. Should the Contractor fail to faithfully and strictly perform the Contract in all its terms, including but not limited to the indemnifications thereunder, the Surety shall be liable for all damages, losses, expenses and liabilities that the City may suffer in consequence thereof, as more fully set forth herein.

It is further understood and agreed that the Surety does hereby relieve the City or its representatives from the exercise of any diligence whatever in securing compliance on the part of the Contractor with the terms of the Contract, and the Surety agrees that it shall be bound to take notice of and shall be held to have knowledge of all acts or omissions of the Contractor in all matters pertaining to the Contract. The Surety understands and agrees that the provision in the Contract that the City will retain certain amounts due the Contractor until the expiration of 30 days from the acceptance of the Work is intended for the City's benefit, and the City will have the right to pay or withhold such retained amounts or any other amount owing under the Contract without changing or affecting the liability of the Surety hereon in any degree.

It is further expressly agreed by Surety that the City or its representatives are at liberty at any time, without notice to the Surety, to make any change in the Contract documents and in the Work to be done thereunder, as provided in the Contract, and in the terms and conditions thereof, or to make any change in, addition to, or deduction from the Work to be done thereunder; and that such changes, if made, shall not in any way vitiate the obligation in this Bond and undertaking or release the Surety therefrom.

It is further expressly agreed and understood that the Contractor and Surety will fully indemnify and save harmless the City from any liability, loss, cost, expense, or damage arising out of Contractor's performance of the Contract.

If the City gives Surety notice of Contractor's default, Surety shall, within 45 days, take one of the following actions:

1. Arrange for Contractor, with consent of the City, to perform and complete the Contract; or

2. Take over and assume completion of the Contract itself, through its agents or through independent contractors, and become entitled to the payment of the balance of the Contract Price.

If the Surety fails to take either of the actions set out above, it shall be deemed to have waived its right to perform and complete the Contract and receive payment of the balance of the Contract Price and the City shall be entitled to enforce any remedies available at law, including but not limited to completing the Contract itself and recovering any cost in excess of the Original Contract Price from the Surety.

This Bond and all obligations created hereunder shall be performable in Harris County, Texas. This Bond is given in compliance with the provisions of Chapter 2253, Texas Government Code, as amended, which is incorporated herein by this reference.

Notices required or permitted hereunder shall be in writing and shall be deemed delivered when actually received or, if earlier, on the third day following deposit in a United States Postal Service post office or receptacle, with proper postage affixed (certified mail, return receipt requested), addressed to the respective other Party at the address prescribed in the Contract documents, or at such other address as the receiving party may hereafter prescribe by written notice to the sending party.

IN WITNESS THEREOF, the said Contractor and Surety have signed and sealed this instrument on the respective dates written below their signatures and have attached current Power of Attorney.

ATTEST, SEAL: (if a corporation)
WITNESS: (if not a corporation)

_____
Name of Contractor

By: _____
Name:
Title:

By: _____
Name:
Title:
Date:

ATTEST/SURETY WITNESS:

(SEAL)

_____
Full Name of Surety

_____
Address of Surety for Notice

_____

_____
Telephone Number of Surety

By: _____
Name:
Title:
Date:

By: _____
Name:
Title: Attorney-in-Fact
Date:

This Ordinance or Contract has been reviewed as to form by the undersigned legal assistant and have been found to meet established Legal Department criteria. The Legal Department has not reviewed the content of these documents.

_____ _____
Legal Assistant Date

END OF DOCUMENT

Document 00611

STATUTORY PAYMENT BOND

THAT WE, _____, as Principal, hereinafter called Contractor and the other subscriber hereto, _____, as Surety, do hereby acknowledge ourselves to be held and firmly bound unto the City of Houston, a municipal corporation, in the sum of $_____ for the payment of which sum, well and truly to be made to the City of Houston, and its successors, the said Contractor and Surety do bind themselves, their heirs, executors, administrators, successors, jointly and severally.

THE CONDITIONS OF THIS OBLIGATION ARE SUCH THAT:

WHEREAS, the Contractor has on or about this day executed a contract in writing with the City of Houston for _____

_____,

all of such work to be done as set out in full in said Contract documents therein referred to and adopted by the City Council, all of which are made a part of this instrument as fully and completely as if set out in full herein;

NOW, THEREFORE, if the said Contractor shall pay all claimants supplying labor and materials to him or a Subcontractor in the prosecution of the Work provided for in the Contract, then, this obligation shall be void; otherwise the same is to remain in full force and effect;

PROVIDED HOWEVER, that this Bond is executed pursuant to the provisions of Chapter 2253, Texas Government Code, as amended, and all liabilities on this Bond shall be determined in accordance with the provisions of said Article to the same extent as if it were copied at length herein.

IN WITNESS THEREOF, the said Contractor and Surety have signed and sealed this instrument on the respective dates written below their signatures and have attached current Power of Attorney.

ATTEST, SEAL: (if a corporation)
WITNESS: (if not a corporation)

_____
Name of Contractor

By: _____
Name:
Title:

By: _____
Name:
Title:
Date:

ATTEST/SURETY WITNESS:

(SEAL)

_____
Full Name of Surety

_____
Address of Surety for Notice

_____

_____
Telephone Number of Surety

By: _____
Name:
Title:
Date:

By: _____
Name:
Title: Attorney-in-Fact
Date:

This Ordinance or Contract has been reviewed as to form by the undersigned legal assistant and have been found to meet established Legal Department criteria. The Legal Department has not reviewed the content of these documents.

_____ _____
Legal Assistant Date

END OF DOCUMENT

Document 00612

ONE-YEAR MAINTENANCE BOND

THAT WE, _____, as Principal, hereinafter called Contractor, and the other subscriber hereto, _____, as Surety, do hereby acknowledge ourselves to be held and firmly bound to the City of Houston, a municipal corporation, in the sum of $_____, for the payment of which sum well and truly to be made to the City of Houston and its successors, the said Contractor and Surety do bind themselves, their heirs, executors, administrators, successors, jointly and severally.

THE CONDITIONS OF THIS OBLIGATION ARE SUCH THAT:

WHEREAS, the Contractor has on or about this day executed a Contract in writing with the City of Houston for _____

_____,

all of such work to be done as set out in full in said Contract documents therein referred to and adopted by the City Council, all of which are made a part of this instrument as fully and completely as if set out in full herein.

NOW THEREFORE, if the said Contractor shall comply with the provisions of Paragraph 11.5.1 of the General Conditions, and correct work not in accordance with the Contract documents discovered within the established one-year period, then this obligation shall become null and void, and shall be of no further force and effect; otherwise, the same is to remain in full force and effect.

Notices required or permitted hereunder shall be in writing and shall be deemed delivered when actually received or, if earlier, on the third day following deposit in a United States Postal Service post office or receptacle, with proper postage affixed (certified mail, return receipt requested), addressed to the respective other party at the address prescribed in the Contract documents, or at such other address as the receiving party may hereafter prescribe by written notice to the sending party.

IN WITNESS THEREOF, the said Contractor and Surety have signed and sealed this instrument on the respective dates written below their signatures and have attached current Power of Attorney.

ATTEST, SEAL: (if a corporation)
WITNESS: (if not a corporation)

_____
Name of Contractor

By: _____
Name:
Title:

By: _____
Name:
Title:
Date:

ATTEST/SURETY WITNESS:

(SEAL)

_____
Full Name of Surety

_____
Address of Surety for Notice

_____

_____
Telephone Number of Surety

By: _____
Name:
Title:
Date:

By: _____
Name:
Title: Attorney-in-Fact
Date:

This Ordinance or Contract has been reviewed as to form by the undersigned legal assistant and have been found to meet established Legal Department criteria. The Legal Department has not reviewed the content of these documents.

_____ _____
Legal Assistant Date

END OF DOCUMENT

Document 00613

ONE-YEAR SURFACE CORRECTION BOND

THAT WE, _____, as Principal, hereinafter called Contractor, and the other subscriber hereto, _____, as Surety, do hereby acknowledge ourselves to be held and firmly bound to the City of Houston, a municipal corporation, in the sum of $_____ such sum being equal to four percent of the Original Contract Price, for the payment of which sum to be made to the City of Houston and its successors, Contractor and Surety do bind themselves, their successors, jointly and severally.

THE CONDITIONS OF THIS OBLIGATION ARE SUCH THAT:

WHEREAS, the Contractor has entered into a Contract in writing with the City of Houston, Texas, dated of even date herewith, for _____

_____,

all of such work to be done in accordance with the Contract documents therein referred to, and adopted by the City Council of the City of Houston.

NOW THEREFORE, if the Contractor shall comply with the provisions of Paragraph 11.5.1 of the General Conditions, and repair, replace, restore, and correct surface work associated with backfill operations of subsurface work not in accordance with the Contract documents discovered within one year from the date that the One-year Maintenance Bond has expired, then this obligation shall become null and void, and shall be of no further force and effect; otherwise, the same is to remain in full force and effect.

Notices required or permitted hereunder shall be in writing and shall be deemed delivered when actually received or, if earlier, on the third day following deposit in a United States Postal Service post office or receptacle, with proper postage affixed (certified mail, return receipt requested), addressed to the respective other party at the address prescribed in the Contract documents, or at such other address as the receiving party may hereafter prescribe by written notice to the sending party.

IN WITNESS THEREOF, the said Principal and Surety have signed and sealed this instrument on the respective dates written below their signatures.

ATTEST, SEAL: (if a corporation)
WITNESS: (if not a corporation)

By: _____
Name:
Title:

_____
Name of Contractor

By: _____
Name:
Title:
Date:

ATTEST/SURETY WITNESS:

(SEAL)

By: _____
Name:
Title:
Date:

_____
Full Name of Surety

_____
Address of Surety for Notice

_____

_____
Telephone Number of Surety

By: _____
Name:
Title: Attorney-in-Fact
Date:

This Ordinance or Contract has been reviewed as to form by the undersigned legal assistant and have been found to meet established Legal Department criteria. The Legal Department has not reviewed the content of these documents.

_____ _____
Legal Assistant Date

END OF DOCUMENT

Document 00620

AFFIDAVIT OF INSURANCE

BEFORE ME, the undersigned authority, on this day personally appeared

_____, who
Affiant

being by me duly sworn on his oath stated that he is _____, of
Title

_____,
Contractor's Company Name

the Contractor named and referred to within the Contract documents; that he is fully competent and authorized to give this affidavit and that the attached original insurance certificate truly and accurately reflects the insurance coverage that is now available and will be available during the term of the Contract.

_____
Affiant's Signature

SWORN AND SUBSCRIBED before me on _____.
Date

_____
Notary Public in and for the State of TEXAS

_____
Print or type Notary Public name

My Commission Expires: _____
Expiration Date

END OF DOCUMENT

Document 00624

AFFIDAVIT OF COMPLIANCE WITH AFFIRMATIVE ACTION PROGRAM

BEFORE ME, the undersigned authority, on this day personally appeared _____, who
Affiant

being by me duly sworn on his oath stated that he is _____,
Title

of _____,
Contractor

the Contractor named and referred to within the Contract documents; that he is fully competent and authorized to give this affidavit and that the Contract is in compliance with the Affirmative Action Program of the City and has done all that is required by the Contract documents, the Affirmative Action Program, and pursuant to Chapter 15, Code of Ordinances, City of Houston, §15.16 et seq.

_____
Affiant's Signature

SWORN AND SUBSCRIBED before me on this day of _____, 20___.

_____
Notary Public in and for the State of TEXAS

_____
Print or Type Notary Public Name

My Commission Expires: _____
Expiration Date

END OF DOCUMENT

Document 00630
(POP-2)
City of Houston
Certification of Compliance with
Pay or Play Program

Contractor Name: _____ $ _____

(Contractor/Subcontractor) ***(Amount of Contract)***

Contractor Address: _____

Project No.: S-000900-0111-4

Project Name: Proposed 42-Inch Water Line along Sandpiper Dr. Lundington Dr Pembridge Dr and W. Bellfort from W. Aiport to Braes Forest Road.

POP Liaison Name: _____

In accordance with the City of Houston Pay or Play Program authorized by Ordinance 2007-534 and Executive Order 1-7, Contractor/Subcontractor agrees to abide by the terms of this Program. This certification is required of all contractors for contracts subject to the program. You must agree EITHER to PAY or to PLAY for all covered employees. The Contractor/Subcontractor may also Pay on behalf of some covered employees and Play on behalf of other covered employees.

The Contractor/Subcontractor will comply with all provisions of the Pay or Play Program and will furnish all information and reports requested to determine compliance with program requirements of the Pay or Play Program (See Executive Order 1-7 for the terms of the Pay or Play program) The criteria of the program is as follows:

The Contractor/Subcontractor agrees to **"Pay"** $1.00 per hour for work performed by covered employees under the contract with the City. If independent contract labor is utilized the Contractor/Subcontractor agrees to report hours worked by the independent contract laborer and pay $1.00 per hour for work performed.

Otherwise the Contractor/Subcontractor agrees to **"Play"** by providing health benefits to each covered employee. The health benefits must meet the following criteria:

1. The employer will contribute no less than $150 per employee per month toward the total premium cost for single coverage only; and
2. The employee contribution, if any amount, will be no greater than 50% of the total premium cost and no more than $150 per month.
3. Pursuant to E.O. 1-7 section 4.04 a contractor is deemed to have complied with respect to a covered employee who is not provided health benefits if the employee refuses the benefits and the employee's contribution to the premium is no more than $40 per month.

Please select whether you choose to:	Pay	Play	Both

The Contractor/Subcontractor will file compliance reports with the City, which will include activity for covered employees subject to the program, in the form and to the extent requested by the administering department. Compliance reports shall contain information including, but not limited to, documentation showing employee health coverage and employee work records.
Note: The Contractor is responsible to the City for the compliance of covered employees of covered subcontractors and only forms that are accurate and complete will be accepted.

***Estimated Number of:**	**Prime Contractor**	**Sub-Contractor**
Total Employees on City Job		
Covered Employees		
Non-Covered Employees		
Exempt Employees		

***Required**

I hereby certify that the above information is true and correct.

_____ _____
Contractor ***(Signature)*** Date

_____
Name and Title ***(Print or type)***

Document 00631
(POP-3)
Pay or Play Program
List of
Subcontractors

Prime Contractor: _____ **POP Contact Person:** _____

Project Number/Description: _____ **Address:** _____

_____ _____

Email: _____

Phone: _____

Note: Include ALL subcontractors (use additional form if necessary)

			Check One							
Subcontractor Name	**Supplier Y/N?**	**Amount of Subcontract**	**Pay**	**Play**	**Both (Pay and Play)**	**N/A**	**Contact Person**	**Phone**	**Email Address**	**Mailing Address**

*If the above information is found to be submitted fraudulently with the intent to bypass or deceive the purpose of the Pay or Play Program the contractor will be held liable for all compliance requirements from the inception of the contract. All subcontracts that surpass the $200,000.00 threshold will be responsible for Pay or PIay compliance from the inception of the contract.

Affidavit

hereby solemnly affirm, certify and confirm that the total sub-contract value stated above is the final value of the contract **(*)** including all material costs, fuel, payroll, taxes, fees, profit sharing, labor or any payments in relation to the contracted work and no separate payment or contract has been made for the sub-contract under contract no._____ . The above sub-contract value includes all the costs related to work under the contract. The contractor and sub-contractor(s) agree to inform The Mayor's Office of Business Opportunity of any related cost(s) added to the contracted work and re-submit POP-3 with the current value of the sub-contract. I understand that compliance with "Pay or Play" program is mandatory and nothing has been hidden to circumvent the program requirements.

00631

_____ 07-03-2012

Contractor Authorized Representative & Title Name & Signature Date

Document 00633

CERTIFICATION BY PROPOSED MATERIAL SUPPLIERS,
LESSORS, AND PROFESSIONAL SERVICE PROVIDERS
REGARDING EQUAL EMPLOYMENT OPPORTUNITY

Company Name: _____ $_____
(Supplier, Lessor, Professional Service Provider) (Amount of Contract)

Company Address: _____

Company Telephone Number: _____ Fax: _____

E-mail Address: _____

Web Page/URL Address: _____

Company Tax Identification Number: _____

Project No.: S-000900-011104

Project Name: Proposed 42-inch Water Line along Sandpiper Dr, Ludington Dr, Pembridge Dr and W. Bellfort, from W. Airport Blvd to Braes Forest Dr.

In accordance with the City of Houston Ordinance 78-1538, Supplier/Lessor/Professional Service Provider represents to be an equal opportunity employer and agrees to abide by the terms of the Ordinance. This certification is required of all Suppliers/Lessors/Professional Service Providers (herein Supplier) with contracts in the amount of $10,000.00 or more.

[ ] Yes [ ] No Supplier agrees not to discriminate against any employee or applicant for employment because of race, religion, color, sex, national origin, or age.

[ ] Yes [ ] No Supplier agrees that all qualified applicants will receive consideration for employment without regard to race, religion, color, sex, national origin, or age.

[ ] Yes [ ] No Supplier will comply with all provisions of Executive Order No. 11246 and rules, regulations and applicable orders of the Department of Labor or other Federal Agency responsible for enforcement of applicable equal opportunity and affirmative action provisions and will likewise furnish all information and reports required by the Mayor or Contract Compliance Officers for the purpose of investigation to ascertain and effect compliance with the City of Houston's Office of Affirmative Action and Contract Compliance.

[ ] Yes [ ] No The Supplier shall file and cause their sub-tier contractors to file compliance reports with the City in the form and to the extent as may be prescribed by the Mayor or Contract Compliance Officers. Compliance reports filed at such times as directed shall contain information including, but not limited to, the practices, policies, programs, and employment policies.

I hereby certify that the above information is true and correct.

_____ _____
COMPANY OFFICER (Signature) DATE

_____
NAME AND TITLE (Print or type)

END OF DOCUMENT

Document 00642

MONTHLY SUBCONTRACTOR PAYMENT REPORTING FORM

Legal Project Name: _____

Outline Agreement No.: _____ WBS No.: _____

Contractor's Company Name: _____

Address: _____

CERTIFICATION

_____, Contractor's Representative for the above referenced Contract, hereby certifies that (1) Contractor has paid all subcontractors, except those noted below, (2) Contractor made such payments (a) in proportion to the amount City paid Contractor and (b) in accordance and compliance with all applicable Contract Documents and laws; and (3) Contractor withheld no sums from any subcontractor for allegations of deficiency in Work. The term "subcontractor", as used herein, includes all persons or firms furnishing work, materials, services or equipment Contractor ordered incorporated into Work or placed near the Project for which the City made partial payment.

EXCEPTION: Contractor sent Payment Notifications to the following subcontractors explaining why Contractor withheld payment. Copies are attached.

Subcontractor Name: _____	Subcontractor Name: _____
Street Address: _____	Street Address: _____
City, State, and Zip Code: _____	City, State, and Zip Code: _____
Amount of Payment Withheld: _____	Amount of Payment Withheld: _____
Date Payment First Withheld: _____	Date Payment First Withheld: _____
Description of Good Faith Reason: _____	Description of Good Faith Reason: _____
_____	_____

_____ _____
(Signature of Contractor's Representative) (Print or Type Name of Contractor's Representative)

SWORN TO AND SUBSCRIBED before me on: _____
Date

_____
Notary Public in and for the State of Texas

My Commission Expires: _____ _____
Expiration Date Print or Type Name of Notary Public

Document 00646

PAYMENT NOTIFICATION – EXPLANATION OF WITHHOLDING

Legal Project Name: _____

Outline Agreement No.: _____ WBS No.: _____

Contractor's Company Name: _____

Address: _____

Date: _____

SUBCONTRACTOR PAYMENT INFORMATION:

Subcontractor Name: _____

Street Address: _____

City, State, and Zip Code: _____

Business Phone Number: _____

Amount of Subcontractor Invoice: _____

Amount of Payment Made: _____

Amount of Payment Withheld: _____

Date Payment First Withheld: _____

DETAILED EXPLANATION OF WITHHOLDING: _____

_____

_____

_____

_____

_____ _____

(Signature of Contractor's Representative) (Print or Type Name of Contractor's Representative)

Document 00700

GENERAL CONDITIONS

November 1, 2011 EDITION

TABLE OF ARTICLES

1. GENERAL PROVISIONS
2. THE CITY
3. CONTRACTOR
4. ADMINISTRATION OF THE CONTRACT
5. SUBCONTRACTORS AND SUPPLIERS
6. CONSTRUCTION BY THE CITY OR BY SEPARATE CONTRACTORS
7. CHANGES IN THE WORK
8. TIME
9. PAYMENTS AND COMPLETION
10. SAFETY PRECAUTIONS
11. INSURANCE AND BONDS
12. UNCOVERING AND CORRECTION OF THE WORK
13. MISCELLANEOUS PROVISIONS
14. TERMINATION OR SUSPENSION OF THE CONTRACT

ARTICLE 1 - GENERAL PROVISIONS 3

1.1 DEFINITIONS 3
1.2 EXECUTION, CORRELATION, AND INTENT 5
1.3 OWNERSHIP AND USE OF DOCUMENTS 6
1.4 INTERPRETATION 6

ARTICLE 2 - THE CITY 6

2.1 LIMITATIONS OF THE CITY'S OFFICERS AND EMPLOYEES 6
2.2 DUTIES OF THE CITY 6
2.3 AVAILABILITY OF LAND AND USE OF SITE 6
2.4 THE CITY'S RIGHT TO STOP THE WORK 7
2.5 THE CITY'S RIGHT TO CARRY OUT WORK 7

ARTICLE 3 - CONTRACTOR 7

3.1 RESPONSIBILITIES 7
3.2 REVIEW OF CONTRACT AND FIELD CONDITIONS BY CONTRACTOR 7
3.3 SUPERVISION AND CONSTRUCTION PROCEDURES 7
3.4 SUPERINTENDENT 8
3.5 LABOR 8
3.6 PREVAILING WAGE RATES 9
3.7 LABOR CONDITIONS 9
3.8 DRUG DETECTION AND DETERRENCE 9
3.9 MATERIALS & EQUIPMENT 10
3.10 PRODUCT OPTIONS AND SUBSTITUTIONS 11
3.11 CASH ALLOWANCES 11
3.12 WARRANTY 11
3.13 TAXES 12
3.14 PERMITS, FEES, AND NOTICES 12
3.15 CONSTRUCTION SCHEDULES 12
3.16 DOCUMENTS AND SAMPLES AT THE SITE 12
3.17 MANUFACTURER'S SPECIFICATIONS 13
3.18 SHOP DRAWINGS, PRODUCT DATA, AND SAMPLES 13
3.19 CULTURAL RESOURCES AND ENDANGERED SPECIES 14
3.20 CUTTING AND PATCHING 14
3.21 CLEANING 14
3.22 SANITATION 14
3.23 ACCESS TO WORK AND TO INFORMATION 14
3.24 TRADE SECRETS 14
3.25 INDEMNIFICATION 15
3.26 RELEASE AND INDEMNIFICATION – PATENT, COPYRIGHT, TRADEMARK, AND TRADE SECRET INFRINGEMENT 15
3.27 INDEMNIFICATION PROCEDURES 16

ARTICLE 4 - ADMINISTRATION OF THE CONTRACT 16

4.1 CONTRACT ADMINISTRATION 16
4.2 COMMUNICATIONS IN ADMINISTRATION OF THE CONTRACT 17
4.3 CLAIMS AND DISPUTES 17
4.4 RESOLUTION OF CLAIMS AND DISPUTES 18

ARTICLE 5 - SUBCONTRACTORS AND SUPPLIERS 19

5.1 AWARD OF SUBCONTRACTS OTHER CONTRACTS FOR PORTIONS OF THE WORK 19
5.2 CONTRACTOR RESPONSIBILITY FOR SUBCONTRACTORS 19

ARTICLE 6 - CONSTRUCTION BY THE CITY OR BY SEPARATE CONTRACTORS 20

6.1 THE CITY'S RIGHT TO PERFORM CONSTRUCTION AND TO AWARD SEPARATE CONTRACTS 20
6.2 COORDINATION 20
6.3 MUTUAL RESPONSIBILITY 20
6.4 THE CITY'S RIGHT TO CLEAN UP 20

ARTICLE 7 - CHANGES IN THE WORK 20

7.1 CHANGES 20
7.2 WORK CHANGE DIRECTIVES 21
7.3 ADJUSTMENTS IN CONTRACT PRICE 21
7.4 MINOR CHANGES IN THE WORK 22

ARTICLE 8 - TIME 22

8.1 PROGRESS AND COMPLETION 22
8.2 DELAYS AND EXTENSIONS OF TIME 23

ARTICLE 9 - PAYMENTS AND COMPLETION 23

9.1 UNIT PRICE WORK 23
9.2 ESTIMATES FOR PAYMENT, UNIT PRICE WORK 24
9.3 STIPULATED PRICE WORK 24
9.4 APPLICATIONS FOR PAYMENT, STIPULATED PRICE WORK 24
9.5 CERTIFICATES FOR PAYMENT 24
9.6 COMPUTATIONS OF CERTIFICATES FOR PAYMENT 24
9.7 DECISIONS TO WITHHOLD CERTIFICATION 25
9.8 PROGRESS PAYMENTS 25
9.9 DATE OF SUBSTANTIAL COMPLETION 25
9.10 PARTIAL OCCUPANCY OR USE 26

9.11 FINAL COMPLETION AND FINAL PAYMENT 26
9.12 LIQUIDATED DAMAGES..... 27

ARTICLE 10 - SAFETY PRECAUTIONS..... 28

10.1 SAFETY PROGRAMS 28
10.2 POLLUTANTS AND POLLUTANT FACILITIES..... 28
10.3 SAFETY OF THE ENVIRONMENT, PERSONS, AND PROPERTY 28
10.4 EMERGENCIES..... 29

ARTICLE 11 - INSURANCE AND BONDS 29

11.1 GENERAL INSURANCE REQUIREMENTS 29
11.2 INSURANCE TO BE PROVIDED BY CONTRACTOR..... 29
11.2 INSURANCE TO BE PROVIDED BY CONTRACTOR..... 29
11.3 PROOF OF INSURANCE 32
11.4 PERFORMANCE AND PAYMENT BONDS..... 33
11.5 MAINTENANCE BONDS 33
11.6 SURETY 33
11.7 DELIVERY OF BONDS..... 34

ARTICLE 12 - UNCOVERING AND CORRECTION OF THE WORK..... 34

12.1 UNCOVERING OF THE WORK 34
12.2 CORRECTION OF THE WORK..... 34
12.3 ACCEPTANCE OF NONCONFORMING WORK.... 34

ARTICLE 13 - MISCELLANEOUS PROVISIONS..... 34

13.1 GOVERNING LAWS..... 34
13.2 SUCCESSORS..... 35
13.3 BUSINESS STRUCTURE AND ASSIGNMENTS ... 35
13.4 WRITTEN NOTICE..... 35
13.5 RIGHTS AND REMEDIES 35
13.6 TESTS AND INSPECTIONS..... 35
13.7 INTEREST 35
13.8 PARTIES IN INTEREST 36
13.9 ENTIRE CONTRACT..... 36
13.10 WRITTEN AMENDMENT..... 36
13.11 COMPLIANCE WITH LAWS..... 36
13.12 SEVERABILITY..... 36

ARTICLE 14 - TERMINATION OR SUSPENSION OF THE CONTRACT..... 36

14.1 TERMINATION BY THE CITY FOR CAUSE 36
14.2 TERMINATION BY THE CITY FOR CONVENIENCE..... 37
14.3 SUSPENSION BY THE CITY FOR CONVENIENCE..... 37
14.4 TERMINATION BY CONTRACTOR 38

ARTICLE 1 - GENERAL PROVISIONS

1.1 DEFINITIONS

1.1.1 Agreement: Document signed by the Parties and binding the Parties, containing the name of Contractor, title and location of the Project, Original Contract Time, Original Contract Price, enumeration of documents included in the Contract, and other provisions.

1.1.2 Bonds: Performance Bond, Payment Bond, Maintenance Bond, and other Surety instruments executed by Surety. When in singular form, refers to individual instrument.

1.1.3 Business Enterprise: Any business entity registered in a program authorized by 49 C.F.R. § 26 (where applicable) or City Code of Ordinances, Chapter 15, Article II, relating to Equal Opportunity Employment and taking affirmative action to ensure that applicants are employed and employees are treated without regard to race, religion, color, sex, national origin, or age. The term "Business Enterprise" may include any Disadvantaged Business Enterprise ("DBE"), Minority Business Enterprise ("MBE"), Woman Business Enterprise ("WBE"), Small Business Enterprise ("SBE"), Person with Disability Enterprise ("PDBE"), and any Historically Underutilized Business ("HUB").

1.1.4 Business Enterprise Policy: Contract documents and applicable policies relating to Business Enterprises and authorized under 49 C.F.R. § 26 or City Code of Ordinances, Chapter 15, Article II.

1.1.5 Cash Allowance: An estimated sum of money to be used only for a limited class of expenditures such as utility relocation costs, fees for special licenses or permits, or other "pass-through" costs that would be the same for any contractor. Cash Allowances may not be used to purchase goods or services that are not specified in the Contract. The unspecified items must be purchased according to the terms of Article 7.

1.1.6 Change Order: Written instrument prepared by the City and signed by City Engineer and Contractor, specifying the following:

.1 a change in the Work;
.2 a change in Contract Price, if any; and
.3 a change in Contract Time, if any.

The value of a Change Order is the net amount after offsetting all deductions against all additions effected by the Change Order.

1.1.7 City: The City of Houston, a home rule municipality located principally within Harris County, Texas, including its successors and its authorized representatives.

1.1.8 City Engineer: The City Engineer, or the City employee representing the City Engineer, designated in the Agreement and authorized to represent the City, or successors.

1.1.9 Claim: Written demand or written assertion by one Party seeking adjustment of the Contract, payment of money, extension of time, or other relief under the Contract and includes, but is not limited to, claims for materials, labor, equipment, delay, changes, adjustments, substitutions, fees and third party claims. The Party making the Claim has the responsibility to substantiate the Claim.

1.1.10 Conditions of the Contract: General Conditions and Supplementary Conditions.

1.1.11 Construction Manager: Person or firm under contract with the City as its authorized representative to oversee and administer construction of the Work, and who may perform the role of Project Manager and Inspector, as designated by City Engineer in writing.

1.1.12 Contract: The Agreement; documents enumerated in and incorporated into the Agreement; Modifications; and amendments.

1.1.13 Contract Price: The monetary amount stated in the Agreement adjusted by Change Order, and increases or decreases in Unit Price Quantities, if any.

1.1.14 Contract Time: The number of days stated in the Agreement to substantially complete the Work, plus days authorized by Change Order.

1.1.15 Contractor: Person or firm identified as such in the Agreement including its successors and its authorized representatives.

1.1.16 Date of Commencement of the Work: Date established in Notice to Proceed on which Contract Time will commence. This date will not be changed by failure of Contractor, or persons or entities for whom Contractor is responsible, to act.

1.1.17 Date of Substantial Completion: Date that construction, or portion thereof designated by City Engineer, is certified by City Engineer to be substantially complete.

1.1.18 Design Consultant: Person or firm, under contract with the City, to provide professional services during construction and its authorized representatives. If a Design Consultant is not employed for services during construction, Project Manager will perform duties of Design Consultant designated in the Contract in addition to usual duties of Project Manager.

1.1.19 Drawings: Graphic and pictorial portions of the Contract that define the character and scope of the Work.

1.1.20 Extra Unit Price: Unit Prices, which may be required for completion of the Work. These Unit Prices and Unit Price Quantities are in the Contract and are included in Original Contract Price.

1.1.21 Furnish: To supply, pay for, deliver to the site, and unload.

1.1.22 General Requirements: The sections of Division 01 Specifications that specify administrative and procedural requirements and temporary facilities required for the Work.

1.1.23 Inspector: City's employee or agent authorized to assist with inspection of the Work.

1.1.24 Install: Unpack, assemble, erect, place, anchor, apply, work to dimension, finish, cure, clean, protect, and similar operations.

1.1.25 Legal Holiday: Day established by the City Council as a holiday.

1.1.26 Major Unit Price Work: An individual Unit Price item,

.1 whose value is greater than five percent of Original Contract Price,

.2 whose value becomes greater than five percent of Original Contract Price as the result of an increase in quantity, or

.3 whose value is $100,000, whichever is least.

1.1.27 Mayor's Office of Business Opportunity: any reference to, or use of, the "Office of Affirmative Action" shall mean the Mayor's Office of Business Opportunity, or any such future name to which it is changed.

1.1.28 Minor Change in the Work: A written change in the Work, ordered by City Engineer, that does not change Contract Price or Contract Time, and that is consistent with the general scope of the Contract.

1.1.29 Modification: Change Order, Work Change Directive, or Minor Change in the Work.

1.1.30 Notice of Noncompliance: A written notice by City Engineer to Contractor regarding defective or nonconforming work that does not meet the Contract requirements, and that establishes a time by which Contractor shall correct the defective or nonconforming work.

1.1.31 Notice to Proceed: A written notice by City Engineer to Contractor establishing Date of Commencement of the Work.

1.1.32 Original Contract Price: The monetary amount originally stated in the Agreement.

1.1.33 Parties: Contractor and the City. When in singular form, refers to Contractor or the City.

1.1.34 Pollutant: Any materials subject to the Texas Solid Waste Disposal Act.

1.1.35 Pollutant Facility: Any facility regulated by the State of Texas to protect the health and environment from contamination by Pollutants, including without limitation, landfills, oil and gas production and storage facilities, wastewater facilities, waste injection wells, and storage tanks (including drums).

1.1.36 Product: Materials, equipment, or systems incorporated into the Work or to be incorporated into the Work.

1.1.37 Product Data: Illustrations, standard schedules, performance charts, instructions, brochures, diagrams, and other information furnished by Contractor to illustrate a Product.

1.1.38 Project: Total construction, of which the Work performed under the Contract may be the whole or a part, and which may include construction by the City or by separate contractors.

1.1.39 Project Manager: City Engineer's authorized representative for administration of the Work. Titles used within the City's departments may be different than those used in this definition.

1.1.40 Provide: Furnish and Install, complete, ready for intended use.

1.1.41 Samples: Physical examples that illustrate Products, or workmanship, and establish standards by which the Work is judged.

1.1.42 Shop Drawings: Drawings, diagrams, schedules, and other data specially prepared for the Work by Contractor, Subcontractor or Supplier, to illustrate a portion of the Work.

1.1.43 Specifications: Divisions 01 through 16 of the documents that are incorporated into the Agreement, consisting of written General Requirements and requirements for Products, standards, and workmanship for the Work, and performance of related services.

1.1.44 Stipulated Price: Single lump sum amount stated in the Contract for completion of the Work, or for designated portion of the Work.

1.1.45 Subcontractor: Person or firm that has direct or indirect contract with Contractor or with another Subcontractor to perform a portion of the Work and its authorized representatives.

1.1.46 Superintendent: Employee of Contractor having authority and responsibility to act for and represent Contractor.

1.1.47 Supplementary Conditions: Part of Conditions of the Contract that amends or supplements General Conditions.

1.1.48 Supplier: Manufacturer, distributor, materialman, or vendor having a direct agreement with Contractor or Subcontractor for Products, or services and its authorized representatives.

1.1.49 Surety: Corporate entity that is bound by one or more Bonds, and is responsible for completion of the Work, including the correction period, and for payment of debts incurred in fulfilling the Contract. Surety shall include co-surety or reinsurer, as applicable.

1.1.50 Underground Facilities: Pipes, conduits, ducts, cables, wires, manholes, vaults, tanks, tunnels, or other such facilities or attachments and encasements containing such facilities that exist below ground level.

1.1.51 Unit Price: An amount stated in the Contract for an individual, measurable item of work, which, when multiplied by actual quantity incorporated into the Work, amounts to full compensation for completion of the item, including work incidental to it.

1.1.52 Unit Price Quantities: Quantities indicated in the Contract that are approximations made by the City for contracting purposes.

1.1.53 Work: Entire construction required by the Contract, including all labor, Products, and services provided by Contractor to fulfill Contractor's obligations. The Work may constitute the whole or a portion of the Project.

1.1.54 Work Change Directive: A written change in the Work, ordered by City Engineer, that is within the general scope of the Contract and consisting of additions, deletions, or other revisions. A Work Change Directive will state proposed basis for adjustment, if any, in Contract Price or Contract Time, or both.

1.2 EXECUTION, CORRELATION, AND INTENT

1.2.1 Execution of the Contract by Contractor is conclusive that Contractor has visited the Work site, become familiar with local conditions under which the Work will be performed, and fully informed itself as to conditions and matters which can affect the Work or costs. Contractor further agrees that it has carefully correlated personal observations with requirements of the Contract.

1.2.2 The Contract and Modifications have been read and carefully considered by Contractor, who understands and agrees to their sufficiency for the Work. The Contract may not be more strongly construed against the City than against Contractor and Surety.

1.2.3 Contractor shall include all items necessary for proper execution and completion of the Work.

1.2.4 Reference to standard specifications, manuals, or codes of a technical society, organization, or association, or to laws or regulations of a governmental authority, whether specific or implied, mean the latest edition in effect as of date of receipt of bids, except as may be otherwise specifically stated in the Contract.

1.2.5 No provision of any referenced standard, specification, or manual changes the duties and responsibilities of the City, City Engineer, Contractor, or Design Consultant from those set forth in the Contract. Nor do these provisions assign to Design Consultant any duty or authority to supervise or direct performance of the Work or any duty or

authority to undertake any actions contrary to provisions of the Contract.

1.2.6 Organization of Specifications into divisions, sections, and articles and arrangement of Drawings does not control Contractor in dividing the Work among Subcontractors or in establishing the extent of work to be performed by any trade.

1.2.7 Unless otherwise defined in the Contract, words which have well-known construction industry technical meanings are used in the Contract in accordance with these recognized meanings.

1.3 OWNERSHIP AND USE OF DOCUMENTS

1.3.1 Drawings, Specifications, and other documents prepared by the City or by Design Consultant are instruments of service through which the Work to be executed by Contractor is described. Contractor may retain one Contract record set.

1.3.2 Neither Contractor, Subcontractor, nor Supplier will own or claim a copyright to documents contained in the Contract or any part of the Contract.

1.3.3 Documents contained in the Contract, prepared by the City or by Design Consultant, and copies furnished to Contractor, are for use solely with respect to the Work. They may not be used by Contractor, Subcontractor or Supplier on other projects or for additions to the Work, outside the scope of the Work, without the specific written consent of City Engineer, and Design Consultant, when applicable.

1.3.4 Contractor, Subcontractors, and Suppliers are granted a limited license to use and reproduce applicable portions of the Contract appropriate to and for use in execution of their work under the Contract.

1.4 *INTERPRETATION*

1.4.1 Specifications are written in an imperative streamlined form and are directed to Contractor, unless noted otherwise. When written in this form, words "shall be" are included by inference where a colon (:) is used within sentences or phrases.

1.4.2 In the interest of brevity, the Contract frequently omits modifying words such as "all" and "any" and articles such as "the" and "an", but an absent modifier or article is not intended to affect interpretation of a statement.

ARTICLE 2 - THE CITY

2.1 *LIMITATIONS OF THE CITY'S OFFICERS AND EMPLOYEES*

2.1.1 No officer or employee of the City may authorize Contractor to perform an act or work contrary to the Contract, except as otherwise provided in the Contract.

2.2 *DUTIES OF THE CITY*

2.2.1 If a building permit is required, the City will process an application for, and Contractor shall purchase the building permit before Date of Commencement of the Work.

2.2.2 The City will make available to Contractor a reproducible set of Drawings. Additional copies will be furnished, on Contractor's request, at the cost of reproduction.

2.2.3 When necessary for performance of the Work, the City will provide surveys describing physical characteristics, legal limitations, legal description of site, and horizontal and vertical control adequate to lay out the Work.

2.2.4 Information or services that the City is required to provide under the Contract will be provided by the City with reasonable promptness to avoid delay in orderly progress of the Work.

2.2.5 The Contract imposes no implied duty on the City. The City does not warrant any plans or specifications associated with the Contract.

2.2.6 Except as expressly stated in this Article, the City owes no duty to the Contractor or any subcontractor.

2.3 *AVAILABILITY OF LAND AND USE OF SITE*

2.3.1 The City will furnish, as indicated in the Contract, rights-of-way, land on which the Work is to be performed, and other land designated in the Contract for use by Contractor unless otherwise provided in the Contract.

2.3.2 Contractor shall confine operations at site to those areas permitted by law, ordinances, permits, and the Contract, and may not unreasonably encumber site with materials or equipment.

2.3.3 In addition to land provided by the City under Section 2.3, Contractor shall provide all land and access to land that may be required for use by Contractor for temporary construction facilities or for storage of materials and equipment, and shall indemnify the City during its use of the land as stated in Section 3.25.

2.4 *THE CITY'S RIGHT TO STOP THE WORK*

2.4.1 If Contractor fails to carry out the Work in accordance with the Contract, or fails to correct work which is not in accordance with requirements of the Contract as required in Sections 12.1 and 12.2, the City may, by Notice of Noncompliance, order Contractor to stop the Work or any portion of the Work until the cause for the order has been eliminated. However, the right of the City to stop the Work will not give rise to a Claim for delay or to a duty on the part of the City to exercise this right for the benefit of Contractor or any other person or entity, except to the extent required by Section 6.2. If Contractor corrects the defective or nonconforming work within the time established in Notice of Noncompliance, City Engineer will give written notice to Contractor to resume performance of the Work.

2.5 *THE CITY'S RIGHT TO CARRY OUT WORK*

2.5.1 If Contractor fails to carry out work in accordance with the Contract, and fails within the period established in a Notice of Noncompliance to correct the nonconforming work, the City may, after expiration of the required period, correct the deficiencies without prejudice to other remedies the City may have, including rights of the City under Section 14.1.

2.5.1.1 When the City corrects deficiencies, City Engineer will issue an appropriate Change Order and deduct from payments then or thereafter due Contractor the cost of correcting the deficiencies, including compensation for Design Consultant's and Construction Manager's additional services and expenses made necessary by such default, neglect, or failure. This action by the City and amounts charged to Contractor are both subject to prior approval of City Engineer. If payments, then or thereafter due Contractor, are not sufficient to cover these amounts, Contractor shall pay the difference to the City.

2.5.2 Notwithstanding the City's right to carry out work, maintenance and protection of the Work remains Contractor's responsibility, as provided in the Contract.

ARTICLE 3 - CONTRACTOR

3.1 *RESPONSIBILITIES*

3.1.1 Contractor shall maintain office with agent in the greater City of Houston area during the Contractor's performance under the Contract. Contractor shall file its street address with City Engineer.

3.1.2 Contractor and Contractor's employees shall not give or lend money or anything of value to an officer or employee of the City. Should this Paragraph 3.1.2 be violated, City Engineer may terminate the Contract under Section 14.1.

3.2 *REVIEW OF CONTRACT AND FIELD CONDITIONS BY CONTRACTOR*

3.2.1 Contractor shall carefully study and compare documents contained in the Contract with each other and with information furnished by the City pursuant to Section 2.2 and shall immediately report, in writing, any errors, inconsistencies, or omissions to City Engineer. If work is affected, Contractor shall obtain a written interpretation or clarification from City Engineer before proceeding with the affected work. However, Contractor will not be liable to the City for failure to report an error, inconsistency, or omission in the Contract unless Contractor had actual knowledge or should have had knowledge of the error, inconsistency, or omission.

3.2.2 Contractor shall take field measurements and verify field conditions, and shall carefully compare the conditions and other information known to Contractor with the Contract, before commencing activities. Contractor shall immediately report, in writing, to City Engineer for interpretation or clarification of discrepancies, inconsistencies, or omissions discovered during this process.

3.2.3 Contractor shall make a reasonable attempt to understand the Contract before requesting interpretation from City Engineer.

3.3 *SUPERVISION AND CONSTRUCTION PROCEDURES*

3.3.1 Contractor shall supervise, direct, and inspect the Work competently and efficiently, devoting the attention and applying the skills and

expertise as necessary to perform the Work in accordance with the Contract. Contractor is solely responsible and has control over construction means, methods, techniques, sequences, and procedures of construction; for safety precautions and programs in connection with the Work; and for coordinating all work under the Contract.

3.3.2 Regardless of observations or inspections by the City or City's consultants, Contractor shall perform and complete the Work in accordance with the Contract and submittals approved pursuant to Section 3.18. The City is not liable or responsible to Contractor or Surety for work performed by Contractor that is not in accordance with the Contract regardless of whether discovered during construction or after acceptance of the Work.

3.4 *SUPERINTENDENT*

3.4.1 Contractor shall employ a competent Superintendent and necessary assistants who shall be present at the site during performance of the Work. Communications given to Superintendent are binding on the Contractor.

3.4.2 Contractor shall notify City Engineer in writing of its intent to replace the Superintendent. Contractor may not replace the Superintendent if City Engineer makes a reasonable objection in writing.

3.5 *LABOR*

3.5.1 Contractor shall provide competent, qualified personnel to survey and lay out the Work and perform construction as required by the Contract. The City may, by written notice, require Contractor to remove from the Work any employee of Contractor or Subcontractors to whom City Engineer makes reasonable objection.

3.5.2 Contractor shall comply with the applicable Business Enterprise Policy set out in this Agreement and in the Supplementary Conditions.

3.5.3 When Original Contract Price is greater than $1,000,000, Contractor shall make Good Faith Efforts to award subcontracts or supply agreements in at least the percentages set out in the Supplementary Conditions for Business Enterprise Policy. Contractor acknowledges that it has reviewed the requirements for Good Faith Efforts on file with the City's Mayor's Office of Business Opportunity and shall comply with them.

3.5.3.1 Contractor shall require written subcontracts with Business Enterprises and shall submit all disputes with Business Enterprises to binding arbitration to be conducted in Houston, Texas, if directed to do so by the Mayor's Office of Business Opportunity Director ("Director"). Business Enterprise subcontracts complying with City Code of Ordinances Chapter 15, Article II must contain the terms set out in Subparagraph 3.5.3.2. If Contractor is an individual person, as distinguished from a corporation, partnership, or other legal entity, and the amount of the subcontract is $50,000 or less, the subcontract must also be signed by the attorneys of the respective parties.

3.5.3.2 Contractor shall ensure that subcontracts with Business Enterprise firms are clearly labeled **"THIS CONTRACT IS SUBJECT TO ARBITRATION ACCORDING TO THE TEXAS GENERAL ARBITRATION ACT"** and contain the following terms:

.1 (Business Enterprise) may not delegate or subcontract more than 50 percent of work under this subcontract to any other subcontractor without the express written consent of the Director.

.2 (Business Enterprise) shall permit representatives of the City of Houston, at all reasonable times, to perform (1) audits of the books and records of the Subcontractors and Suppliers, and (2) inspections of all places where work is to be undertaken in connection with this subcontract. (Business Enterprise) shall keep the books and records available for this purpose for at least four years after the end of its performance under this subcontract. Nothing in this Section shall affect the time for bringing a cause of action nor the applicable statute of limitations.

.3 Within five business days of execution of this subcontract, Contractor and (Business Enterprise) shall designate in writing to the Director an agent for receiving any notice required or permitted to be given pursuant to Chapter 15 of the Houston City Code of Ordinances, along with the street and mailing address and phone number of the agent.

.4 As concluded by the parties to this subcontract, and as evidenced by their signature to this subcontract, any controversy between the parties involving the construction or application of the terms of this subcontract will, on the written request of one party served upon the other or upon notice by Director served on both parties, be submitted to arbitration, under the

Texas General Arbitration Act (TEX. CIV. PRAC. & REM. CODE ANN., Ch 171 -- "Act"). Arbitration will be conducted according to the following procedures:

.1 Upon the decision of the Director or upon written notice to the Director from either party that a dispute has arisen, the Director shall notify all parties that they must resolve the dispute within 30 days or the matter may be referred to arbitration.

.2 If the dispute is not resolved within the time specified, any party or the Director may submit the matter to arbitration governed by the American Arbitration Association rules.

.3 Upon submittal of the matter to arbitration, each party shall pay all fees required by the American Arbitration Association and its arbitrators from liability for decisions reached in the arbitration.

.4 If the City contracts with an organization other than the American Arbitration Association to provide arbitration services related to disputes between prime contractors and Business Enterprise firms, the parties may, at their option, proceed with arbitration before the American Arbitration Association or with the organization the City has contracted with.

.5 All arbitrations will be conducted in Houston, Texas unless the parties agree to another location in writing.

3.5.4 The requirements and terms of the City of Houston Pay or Play Program, as set out in Executive Order 1-7 and Ordinance 2007-0534, are incorporated into the Contract for all purposes. Contractor shall comply with the terms and conditions of the Pay or Play Program as they are set out at the time of City Council approval of this agreement. IF CONTRACTOR DOES NOT PAY IN ACCORDANCE WITH THE PAY OR PLAY PROGRAM WITHIN 30 DAYS OF THE DATE CITY ENGINEEER SENDS CONTRACTOR WRITTEN NOTIFICATION, CITY CONTROLLER MAY DEDUCT FUNDS UP TO THE AMOUNT OWED FROM ANY PAYMENTS OWED TO CONTRACTOR UNDER THIS AGREEMENT, AND CONTRACTOR WAIVES ANY RECOURSE.

3.6 *PREVAILING WAGE RATES*

3.6.1 Contractor shall comply with governing statutes providing for labor classification of wage scales for each craft or type of laborer, worker, or mechanic.

3.6.2 Prevailing wage rates applicable to the Work may be one or a combination of the following wage rates identified in Division 00:

.1 Federal Wage Rate General Decisions
- .1 Highway Rates
- .2 Building Rates
- .3 Heavy Construction Rates
- .4 Residential Rates

.2 City Prevailing Wage Rates
- .1 Building Construction Rates
- .2 Engineering Construction Rates
- .3 Asbestos Worker Rates

3.6.3 Each week Contractor shall submit to the City's Mayor's Office of Business Opportunity certified copies of payrolls showing classifications and wages paid by Contractor, Subcontractors, and Suppliers for each employee under the Contract, for any day included in the Contract.

3.7 *LABOR CONDITIONS*

3.7.1 In the event of labor disputes affecting Contractor or Contractor's employees, Contractor shall utilize all possible means to resolve disputes in order that the Work not be delayed to any extent. These means will include seeking injunctive relief and filing unfair labor practice charges, and any other action available to Contractor.

3.7.2 When Contractor has knowledge that any actual or potential labor dispute is delaying or is threatening to delay timely performance of the Work, Contractor shall immediately notify City Engineer in writing. No Claims will be accepted by City Engineer for costs incurred as a result of jurisdictional or labor disputes.

3.8 *DRUG DETECTION AND DETERRENCE*

3.8.1 It is the policy of the City to achieve a drug-free work force and to provide a workplace that is free from the use of illegal drugs and alcohol. It is also the policy of the City that manufacture, distribution, dispensation, possession, sale, or use of

illegal drugs or alcohol by contractors while on the City's premises is prohibited. By executing the Contract, Contractor represents and certifies that it meets and will comply with all requirements and procedures set forth in the Mayor's Policy on Drug Detection and Deterrence, City Council Motion No. 92-1971 (“Mayor's Policy”) and the Mayor's Drug Detection and Deterrence Procedures for Contractors, Executive Order No. 1-31, (Revised) ("Executive Order"). Mayor's Policy is on file in the office of the City Secretary. Copies of Executive Order may be obtained at the location specified in the Advertisement for Bids.

3.8.1.1 The Executive Order applies to the City's contracts for labor or services except the following:

.1 contracts authorized by Emergency Purchase Orders,
.2 contracts in which imposition of requirements of the Executive Order would exclude all potential bidders or proposers, or would eliminate meaningful competition for the Contract,
.3 contracts with companies that have fewer than 15 employees during any 20-week period during a calendar year and no safety impact positions,
.4 contracts with non-profit organizations providing services at no cost or reduced cost to the public, and
.5 contracts with federal, state, or local governmental entities.

3.8.1.2 Prior to execution of the Contract, Contractor shall have filed with the City:

.1 a Drug Policy Compliance Agreement form (Attachment “A” to the Executive Order), and
.2 a copy of Contractor’s drug free workplace policy, and
.3 a written designation of all safety impact positions, if applicable, or a Contractor’s Certification of a No Safety Impact Positions form (Attachment “C” to the Executive Order).

3.8.1.3 Every six months during performance of the Contract and upon completion of the Contract, Contractor shall file a Drug Policy Compliance Declaration form (Attachment “B” to the Executive Order). The Contractor shall submit the Drug Policy Compliance Declaration within 30 days of expiration of each six-month period of performance and within 30 days of completion of the Contract. The first six-month period shall begin on Date of Commencement of the Work.

3.8.1.4 Contractor shall have a continuing obligation to file updated designation of safety impact positions when additional safety impact positions are added to Contractor's employee workforce during performance of the Work.

3.8.1.5 Contractor shall require its Subcontractors and Suppliers to comply with the Mayor's Policy and Executive Order. Contractor is responsible for securing and maintaining required documents from Subcontractors and Suppliers for the City inspection throughout the term of the Contract.

3.8.1.6 Failure of Contractor to comply with requirements will be a material breach of the Contract entitling the City to terminate in accordance with Section 14.1.

3.9 *MATERIALS & EQUIPMENT*

3.9.1 Unless otherwise provided in the Contract, Contractor shall provide and assume full responsibility for Products, labor, transportation, construction equipment and machinery, tools, appliances, fuel, power, light, heat, telephone, water, sanitary facilities, transportation, temporary facilities, supplies, and other facilities and incidentals necessary for Furnishing, performing, testing, starting-up, and completing the Work.

3.9.1.1 Contractor, Subcontractors, and Suppliers shall use Ultra Low Sulfur Diesel Fuel in all diesel operating vehicles and motorized equipment utilized in performing the Work. Ultra Low Sulfur Diesel Fuel is defined as diesel fuel having 15 ppm or the applicable standard set by state or federal law or rules and regulations of the Texas Commission on Environmental Quality, or the Environmental Protection Agency, whichever is less in sulfur content. Off-road Ultra Low Sulfur Diesel Fuel may be used in lieu of on-road Ultra Low Sulfur Diesel Fuel. Contractor shall provide, upon request by City Engineer, proof that Contractor, Subcontractors, and Suppliers are using Ultra Low Sulfur Diesel Fuel.

3.9.2 Contractor shall provide Products that are:

.1 new, unless otherwise required or permitted by the Contract, and
.2 of specified quality.

If required by City Engineer, Contractor shall furnish satisfactory evidence, including reports of required tests, as to kind and quality of Products.

3.9.3 Contractor shall store Products in a safe, neat, compact, and protected manner. Contractor shall also store Products delivered during the work, along the right-of-way:

.1 so as to cause the least inconvenience to property owners, tenants, and general public; and
.2 so as not to block access to, or be closer than, three feet to any fire hydrant.

Contractor shall protect trees, lawns, walks, drives, streets, and other improvements that are to remain, from damage. If private or public property is damaged by Contractor, Contractor shall, at its sole expense, restore the damaged property to at least its original condition.

3.9.3.1 Contractor shall obtain City Engineer's approval for storage areas used for Products for which payment has been requested under Paragraph 9.6.1. Contractor shall provide the City access to the storage areas for inspection purposes. Products, once paid for by the City, become the property of the City and may not be removed from place of storage, without City Engineer's written permission except for a movement to the site. Contractor's Installation Floater, required under Section 11.2, shall cover all perils, including loss or damage to Products during storage, loading, unloading, and transit to the site.

3.10 *PRODUCT OPTIONS AND SUBSTITUTIONS*

3.10.1 For Products specified by reference standards or by description only, Contractor may provide any Product meeting those standards or description.

3.10.2 For Products specified by naming one or more manufacturers with provision for substitutions or equal, Contractor may submit a request for substitution for any manufacturer not named.

3.10.3 City Engineer will consider requests for substitutions only within the first 15 percent of Contract Time, or first 90 days after date of Notice to Proceed, whichever is less.

3.10.4 Contractor shall document each request for substitution with complete data substantiating compliance of proposed substitution with the Contract.

3.10.5 A request for substitution constitutes a representation that Contractor:

.1 has investigated the proposed Product and determined that it meets or exceeds the quality level of the specified Product;
.2 shall provide the same warranty for the substitution as for the specified Product;
.3 shall coordinate installation of the proposed substitution and make changes to other work which may be required for the Work to be completed, with no additional cost or increase in time to the City;
.4 confirms that cost data is complete and includes all related costs under the Contract;
.5 waives Claim for additional costs or time extensions that may subsequently become apparent; and
.6 shall provide review or redesign services by a design consultant with appropriate professional license and shall obtain re-approval and permits from authorities.

3.10.6 City Engineer will not consider and will not approve substitutions when:

.1 they are indicated or implied on Shop Drawing or Product Data submittals without separate written request; or
.2 acceptance will require revision to the Contract.

3.10.7 City Engineer may reject requests for substitution, and his decision will be final and binding on the Parties.

3.11 *CASH ALLOWANCES*

3.11.1 Contract Price includes Cash Allowances as identified in the Contract.

3.11.2 The City will pay the actual costs of Cash Allowance item exclusive of profit, overhead or administrative costs. If actual costs exceed the Cash Allowance, City Engineer must approve a Change Order for the additional costs.

3.12 *WARRANTY*

3.12.1 Contractor warrants to the City that Products furnished under the Contract are:

.1 free of defects in title;
.2 of good quality; and
.3 new, unless otherwise required or permitted by the Contract.

If required by the City Engineer, Contractor shall furnish satisfactory evidence as to kind, quality and title of Products, and that Products conform to requirements of the Contract.

3.12.2 In the event of a defect in a Product, either during construction or warranty period, Contractor shall take appropriate action with manufacturer of Product to assure correction or replacement of defective Product with minimum delay.

3.12.3 Contractor warrants that the Work is free of defects not inherent in the quality required or permitted, and that the Work does conform with the requirements of the Contract. Contractor further warrants that the Work has been performed in a thorough and workmanlike manner.

3.12.4 Contractor warrants that the Work is free of concentrations on polychlorinated biphenyl (PCB) and other substances defined as hazardous by the Comprehensive Environmental Response Compensation and Liability Act (CERCLA) or any other applicable law or regulation.

3.12.5 Work not conforming to requirements of Section 3.12, including substitutions not properly approved and authorized, may be considered nonconforming work.

3.12.6 Contractor's warranty excludes remedy for damage or defect caused by:

.1 improper or insufficient maintenance by the City;

.2 normal wear and tear under normal usage; or

.3 claim that hazardous material was incorporated into the Work, if that material was specified in the Contract.

3.12.7 Contractor warrants that title to all work covered by Contractor's request for payment passes to the City upon incorporation into the Work or upon Contractor's receipt of payment, whichever occurs first. The Contractor further warrants that the title is free of all liens, claims, security interests or other interests ("Encumbrances"). If not, upon written demand from City Engineer, Contractor shall immediately take legal action necessary to remove Encumbrances.

3.13 *TAXES*

3.13.1 Contractor shall pay all sales, consumer, use, and similar taxes, which are in effect or scheduled to go into effect on or before bids are received, related to work provided by Contractor.

3.13.2 Contractor shall obtain, and require Subcontractors and Suppliers to obtain, necessary permits from the state and local taxing authorities to perform contractual obligations under the Contract, including sales tax permits.

3.13.3 The City is exempt from the Federal Transportation and Excise Tax. Contractor shall comply with federal regulations governing the exemptions.

3.13.4 Products incorporated into the Work are exempt from state sales tax according to provisions of the TEX. TAX CODE ANN. CH. 151, Subsection H.

3.14 *PERMITS, FEES, AND NOTICES*

3.14.1 Unless otherwise provided in the Contract, Contractor shall secure and pay for all construction permits, licenses, and inspections:

.1 necessary for proper execution and completion of the Work; and

.2 legally required at time bids are received.

3.15 *CONSTRUCTION SCHEDULES*

3.15.1 On receipt of Notice to Proceed, Contractor shall promptly prepare and submit construction schedule for the Work for City Engineer's review. The schedule must reflect the minimum time required to complete the Work not to exceed Contract Time.

3.15.2 Contractor shall give 24-hour written notice to City Engineer before commencing work or resuming work where work has been stopped. Contractor shall also give the same notice to inspectors.

3.15.3 Contractor shall incorporate milestones specified in Summary of Work Specification into the construction schedule. Contractor's failure to meet a milestone, as determined by City Engineer, may be considered a material breach of the Contract.

3.15.4 Each month, Contractor shall submit to City Engineer a copy of an updated construction schedule indicating actual progress, incorporating applicable changes, and indicating courses of action required to assure completion of the Work within Contract Time.

3.15.5 Contractor shall keep a current schedule of submittals that coordinates with the construction schedule, and shall submit the initial schedule of submittals to City Engineer for approval.

3.16 *DOCUMENTS AND SAMPLES AT THE SITE*

3.16.1 Contractor shall maintain at the site, and make available to City Engineer, one record copy of Drawings, Specifications, and Modifications. Contractor shall maintain the documents in good order and marked currently to record changes and selections made during construction. In addition, Contractor shall maintain at the site, approved Shop Drawings, Product Data, Samples, and similar submittals, which will be delivered to City Engineer prior to final inspection as required in Paragraph 9.11.4.

3.16.2 Contractor shall maintain all books, documents, papers, accounting records, and other relevant documentation pursuant to the Work and shall make the books, documents, papers, and accounting records available to representatives of the City for review and audits during the Contract term and for the greater of three years following Date of Substantial Completion or until all litigation or audits are fully resolved.

3.16.3 Contractor shall provide to City Attorney all documents and records that City Attorney deems necessary to assist in determining Contractor's compliance with the Contract, with the exception of those documents made confidential by federal or state law or regulation.

3.17 *MANUFACTURER'S SPECIFICATIONS*

3.17.1 Contractor shall handle, store, and Install Products and perform all work in the manner required by Product manufacturer. Should the Contract and manufacturer's instructions conflict, Contractor shall report conflict to City Engineer for resolution prior to proceeding with the affected work.

3.17.2 References in the Contract to the manufacturer's specifications, directions, or recommendations, mean manufacturer's current published documents in effect as of date of receipt of bids, or in the case of a Modification, as of date of Modification.

3.18 SHOP DRAWINGS, PRODUCT DATA, AND SAMPLES

3.18.1 Shop Drawings, Product Data, and Samples are not part of the Contract. The purpose of Contractor submittals is to demonstrate, for those portions of the Work for which submittals are required, the way Contractor proposes to conform to information given and design concept expressed in the Contract.

3.18.2 Contractor shall submit to Project Manager for review the Shop Drawings, Product Data, and Samples, which are required by the Contract. Review by Project Manager is subject to limitations of Paragraph 4.1.4. Contractor shall transmit the submittals to the Project Manager with reasonable promptness and in a sequence, so as to cause no delay in the Work or in activities of the City or of separate contractors. Contractor shall transmit submittals in time to allow a minimum of 30 days for Project Manager's review prior to date Contractor needs reviewed submittals returned. This time may be shortened for a particular job requirement if approved by Project Manager in advance of submittal.

3.18.3 Contractor shall certify that the content of submittals conforms to the Contract without exception by affixing Contractor's approval stamp and signature. By certifying and submitting Shop Drawings, Product Data, and Samples, Contractor represents, and Contractor's stamp of approval shall state, that Contractor has determined and verified materials, quantities, field measurements, and field construction criteria related to the submittal, and has checked and coordinated information contained within the submittals with requirements of the Contract.

3.18.4 Contractor may not perform any work requiring submittal and review of Shop Drawings, Product Data, or Samples until the submittal has been returned with appropriate review decision by the Project Manager. Contractor shall perform work in accordance with the review.

3.18.5 If Contractor performs any work requiring submittals prior to review and acceptance of the submittals by Project Manager, such work is at Contractor's risk and the City is not obligated to accept work if the submittals are later found to be unacceptable.

3.18.6 If, in the opinion of Project Manager, the submittals are incomplete, or demonstrate an inadequate understanding of the Work or lack of review by the Contractor, then submittals may be returned to the Contractor for correction and resubmittal.

3.18.7 Contractor shall direct specific attention in writing and on the resubmitted Shop Drawings, Product Data, or Samples to any additional proposed revisions, other than those revisions requested by Project Manager on previous submittals.

3.18.8 Contractor is not relieved of responsibility for deviations from requirements of the Contract by Project Manager's review of Shop Drawings, Product Data, or Samples unless Contractor has specifically informed Project Manager in writing of the deviation at the time of the submittal, and Project Manager has given written approval of the deviation.

3.18.9 When professional certification of performance criteria of Products is required by the Contract, the City may rely upon accuracy and completeness of the calculations and certifications.

3.18.10 For Product colors or textures to be selected by the City, Contractor shall submit all samples together to allow preparation of a complete selection schedule.

3.18.11 Contractor shall submit informational submittals, on which Project Manager is not expected to take responsive action, as required by the Contract.

3.18.12 Submittals made by Contractor which are not required by the Contract may be returned to Contractor without action.

3.19 *CULTURAL RESOURCES AND ENDANGERED SPECIES*

3.19.1 Contractor may not remove or disturb, or cause to be removed or disturbed, any historical, archaeological, architectural, or other cultural artifacts, relics, vestiges, remains, or objects of antiquity. If Contractor discovers one of these items, Contractor shall immediately notify City Engineer and further comply with the requirements of 13 Tex. Admin. Code Chs. 25 and 26 (2002), or successor regulation. Contractor shall protect site and cultural resources from further disturbance until professional examination can be made or until clearance to proceed is authorized in writing by City Engineer.

3.19.2 Should either threatened or endangered plant or animal species be encountered, Contractor shall cease work immediately in the area of encounter and notify City Engineer.

3.20 *CUTTING AND PATCHING*

3.20.1 Contractor is responsible for necessary cutting, fitting, and patching to accomplish the Work and shall suitably support, anchor, attach, match, and trim or seal materials to work of other contractors. Contractor shall coordinate the Work with work of other contractors to minimize conflicts, as provided in Article 6.

3.20.2 Contractor may not endanger work by cutting, digging, or other action, and may not cut or alter work of other contractors except by written consent of City Engineer and affected contractor.

3.21 *CLEANING*

3.21.1 Contractor shall perform daily cleanup of all dirt, debris, scrap materials and other disposable items resulting from Contractor's operations, whether on-site or off-site. Unless otherwise authorized in writing by City Engineer, Contractor shall keep all streets, access streets, driveways, areas of public access, walkways, and other designated areas clean and open at all times.

3.21.2 Failure of Contractor to maintain a clean site, including access streets, is the basis for City Engineer to issue a Notice of Noncompliance. Should compliance not be attained within the time period in the Notice of Noncompliance, City Engineer may authorize necessary cleanup to be performed by others and the cost of the cleanup will be deducted from monies due Contractor.

Contractor shall legally dispose off-site, all waste materials and other excess materials resulting from Contractor's operations.

3.22 *SANITATION*

3.22.1 Contractor shall provide and maintain sanitary facilities at site for use of all construction forces under the Contract. Newly-constructed or existing sanitary facilities may not be used by Contractor.

3.23 *ACCESS TO WORK AND TO INFORMATION*

3.23.1 Contractor shall provide the City, Design Consultant, testing laboratories, and governmental agencies which have jurisdictional interests, access to the Work in preparation and in progress wherever located. Contractor shall provide proper and safe conditions for the access.

3.23.2 If required by City Engineer, Contractor shall furnish information concerning character of Products and progress and manner of the Work, including information necessary to determine cost of the Work, such as number of employees, pay of employees, and time employees worked on various classes of the Work.

3.24 *TRADE SECRETS*

3.24.1 Contractor will not make any claim of ownership of trade secrets as to products used in the Work, or preparation of any mixture for the Work. City Engineer will at all times have the right to demand and Contractor shall furnish information concerning materials or samples of ingredients of any materials used, or proposed to be used, in preparation of concrete placed or other work to be done. Mixtures, once agreed on, shall not be changed in any manner without knowledge and consent of City Engineer. The City will make its best efforts to protect confidentiality of proprietary information.

3.25 *INDEMNIFICATION*

3.25.1 CONTRACTOR AGREES TO AND SHALL DEFEND, INDEMNIFY, AND HOLD THE CITY, ITS AGENTS, EMPLOYEES, OFFICERS, AND LEGAL REPRESENTATIVES (COLLECTIVELY THE "CITY") HARMLESS FOR ALL CLAIMS, CAUSES OF ACTION, LIABILITIES, FINES, AND EXPENSES (INCLUDING, WITHOUT LIMITATION, ATTORNEYS' FEES, COURT COSTS, AND ALL OTHER DEFENSE COSTS AND INTEREST) FOR INJURY, DEATH, DAMAGE, OR LOSS TO PERSONS OR PROPERTY SUSTAINED IN CONNECTION WITH OR INCIDENTAL TO PERFORMANCE UNDER THE CONTRACT INCLUDING, WITHOUT LIMITATION, THOSE CAUSED BY:

.1 CONTRACTOR'S AND/OR ITS AGENTS', EMPLOYEES', OFFICERS', DIRECTORS', CONTRACTORS', OR SUBCONTRACTORS' (COLLECTIVELY IN NUMBERED SUBPARAGRAPHS .1 through .3, "CONTRACTOR") ACTUAL OR ALLEGED NEGLIGENCE OR INTENTIONAL ACTS OR OMISSIONS;

.2 THE CITY'S AND CONTRACTOR'S ACTUAL OR ALLEGED CONCURRENT NEGLIGENCE, WHETHER CONTRACTOR IS IMMUNE FROM LIABILITY OR NOT;

.3 THE CITY'S AND CONTRACTOR'S ACTUAL OR ALLEGED STRICT PRODUCTS LIABILITY OR STRICT STATUTORY LIABILITY, WHETHER CONTRACTOR IS IMMUNE FROM LIABILITY OR NOT.

CONTRACTOR SHALL DEFEND, INDEMNIFY, AND HOLD THE CITY HARMLESS DURING THE TERM OF THE CONTRACT AND FOR FOUR YEARS AFTER THE CONTRACT TERMINATES. CONTRACTOR SHALL NOT INDEMNIFY THE CITY FOR THE CITY'S SOLE NEGLIGENCE.

3.25.2 NOTWITHSTANDING ANYTHING TO THE CONTRARY, THE LIABILITY OF CONTRACTOR FOR THE CITY'S CONCURRENT NEGLIGENCE SHALL NOT EXCEED $1,000,000.

3.26 *RELEASE AND INDEMNIFICATION – PATENT, COPYRIGHT, TRADEMARK, AND TRADE SECRET INFRINGEMENT*

3.26.1 UNLESS OTHERWISE SPECIFICALLY REQUIRED BY THE CONTRACT, CONTRACTOR AGREES TO AND SHALL RELEASE AND DEFEND, INDEMNIFY, AND HOLD HARMLESS THE CITY, ITS AGENTS, EMPLOYEES, OFFICERS, AND LEGAL REPRESENTATIVES (COLLECTIVELY THE "CITY") FROM ALL CLAIMS OR CAUSES OF ACTION BROUGHT AGAINST THE CITY BY ANY PARTY, INCLUDING CONTRACTOR, ALLEGING THAT THE CITY'S USE OF ANY EQUIPMENT, SOFTWARE, PROCESS, OR DOCUMENTS CONTRACTOR FURNISHES DURING THE TERM OF THE CONTRACT INFRINGES ON A PATENT, COPYRIGHT, OR TRADEMARK, OR MISAPPROPRIATES A TRADE SECRET. CONTRACTOR SHALL PAY ALL COSTS (INCLUDING, WITHOUT LIMITATION, ATTORNEYS' FEES, COURT COSTS, AND ALL OTHER DEFENSE COSTS, AND INTEREST) AND DAMAGES AWARDED.

3.26.2 CONTRACTOR SHALL NOT SETTLE ANY CLAIM ON TERMS WHICH PREVENT THE CITY FROM USING THE EQUIPMENT, SOFTWARE, PROCESS, OR PRODUCT WITHOUT THE CITY ENGINEER'S PRIOR WRITTEN CONSENT.

3.26.3 UNLESS OTHERWISE SPECIFICALLY REQUIRED BY THE CONTRACT, WITHIN 60 DAYS AFTER BEING NOTIFIED OF THE CLAIM, CONTRACTOR SHALL, AT ITS OWN EXPENSE, EITHER:

.1 OBTAIN FOR THE CITY THE RIGHT TO CONTINUE USING THE EQUIPMENT, SOFTWARE, PROCESS, OR PRODUCT, OR

.2 IF BOTH PARTIES AGREE, REPLACE OR MODIFY THEM WITH COMPATIBLE AND FUNCTIONALLY EQUIVALENT PRODUCTS.

IF NONE OF THESE ALTERNATIVES IS REASONABLY AVAILABLE, THE CITY MAY RETURN THE EQUIPMENT, SOFTWARE, OR PRODUCT, OR DISCONTINUE THE PROCESS,

AND CONTRACTOR SHALL REFUND THE PURCHASE PRICE.

3.27 *INDEMNIFICATION PROCEDURES*

3.27.1 *Notice of Indemnification Claims:* If the City or Contractor receives notice of any claim or circumstances which could give rise to an indemnified loss, the receiving party shall give written notice to the other Party within 10 days. The notice must include the following:

.1 a description of the indemnification event in reasonable detail,
.2 the basis on which indemnification may be due, and
.3 the anticipated amount of the indemnified loss.

This notice does not estop or prevent the City from later asserting a different basis for indemnification or a different amount of indemnified loss than that indicated in the initial notice. If the City does not provide this notice within the 10-day period, it does not waive any right to indemnification except to the extent that Contractor is prejudiced, suffers loss, or incurs expense because of the delay.

3.27.2 *Defense of Indemnification Claims:*

.1 *Assumption of Defense:* Contractor may assume the defense of the claim at its own expense with counsel chosen by it that is reasonably satisfactory to the City. Contractor shall then control the defense and any negotiations to settle the claim. Within 10 days after receiving written notice of the indemnification request, Contractor must advise the City as to whether or not it will defend the claim. If Contractor does not assume the defense, the City shall assume and control the defense, and all defense expenses constitute an indemnified loss.

.2 *Continued Participation:* If Contractor elects to defend the claim, the City may retain separate counsel to participate in, but not control, the defense and to participate in, but not control, any settlement negotiations. Contractor may settle the claim without the consent or agreement of the City, unless it:

.1 would result in injunctive relief or other equitable remedies or otherwise require the City to comply with restrictions or limitations that adversely affect the City;
.2 would require the City to pay amounts that Contractor does not fund in full; or
.3 would not result in the City's full and complete release from all liability to the plaintiffs or claimants who are parties to or otherwise bound by the settlement.

3.28 *CONTRACTOR DEBT*

IF CONTRACTOR, AT ANY TIME DURING THE TERM OF THIS AGREEMENT, INCURS A DEBT, AS THE WORD IS DEFINED IN SECTION 15-122 OF THE HOUSTON CITY CODE OF ORDINANCES, IT SHALL IMMEDIATELY NOTIFY CITY CONTROLLER IN WRITING. IF CITY CONTROLLER BECOMES AWARE THAT CONTRACTOR HAS INCURRED A DEBT, IT SHALL IMMEDIATELY NOTIFY CONTRACTOR IN WRITING. IF CONTRACTOR DOES NOT PAY THE DEBT WITHIN 30 DAYS OF EITHER SUCH NOTIFICATION, CITY CONTROLLER MAY DEDUCT FUNDS IN AN AMOUNT EQUAL TO THE DEBT FROM ANY PAYMENTS OWED TO CONTRACTOR UNDER THIS AGREEMENT, AND CONTRACTOR WAIVES ANY RECOURSE THEREFOR. CONTRACTOR SHALL FILE A NEW AFFIDAVIT OF OWNERSHIP, USING THE FORM DESIGNATED BY CITY, BETWEEN FEBRUARY 1 AND MARCH 1 OF EVERY YEAR DURING THE TERM OF THE CONTRACT.

ARTICLE 4 - ADMINISTRATION OF THE CONTRACT

4.1 *CONTRACT ADMINISTRATION*

4.1.1 City Engineer will provide administration of the Contract and City Engineer is authorized to issue Change Orders, Work Change Directives, and Minor Changes in the Work.

4.1.2 City Engineer may act through Project Manager, Design Consultant, or Inspector. When the term "City Engineer" is used in the Contract, action by City Engineer is required unless City Engineer delegates his authority in writing. The City Engineer may not delegate authority to render decisions under Section 4.4.

The City does not have control over or charge of, and is not responsible for, supervision, construction, and safety procedures enumerated in Section 3.3. The City does not have control over or charge of and

is not responsible for acts or omissions of Contractor, Subcontractors, or Suppliers.

4.1.3 The City and Design Consultant may attend project meetings and visit the site to observe progress and quality of the Work. The City and Design Consultant are not required to make exhaustive or continuous on-site inspections to check quality or quantity of the Work.

4.1.4 Project Manager will review and approve or take other appropriate action on Contractor's submittals, but only for limited purpose of checking for conformance with information given and design concept expressed in the Contract.

4.1.5 Project Manager's review of the submittals is not conducted for purpose of determining accuracy and completeness of other details, such as dimensions and quantities, or for substantiating instructions for installation or performance of Products, all of which remain the responsibility of Contractor.

4.1.6 Project Manager's review of submittals does not relieve Contractor of its obligations under Sections 3.3, 3.12, and 3.18. Review does not constitute approval of safety precautions or, unless otherwise specifically stated by Project Manager in writing, of construction means, methods, techniques, sequences, or procedures. Project Manager's review of a specific item does not indicate approval of an assembly of which the item is a component.

4.1.7 Based on field observations and evaluations, Project Manager will process Contractor's progress payments, certify amounts due Contractor, and issue Certificates for Payment in the amount certified.

4.1.8 Project Manager will receive and forward to City Engineer for his review and records, written warranties and related documents required by the Contract and assembled by Contractor.

4.1.9 Upon written request by Contractor or Project Manager, City Engineer will resolve matters of interpretation of or performance of the Contract, which are not Claims. City Engineer's decisions are final and binding on the Parties.

4.1.10 City Engineer may reject work which does not conform to the Contract.

4.1.11 When City Engineer considers it necessary to implement the intent of the Contract, City Engineer may require additional inspection or testing of work in accordance with Paragraphs 13.6.3 and 13.6.4, whether such work is fabricated, Installed, or completed.

4.2 *COMMUNICATIONS IN ADMINISTRATION OF THE CONTRACT*

4.2.1 Except as otherwise provided in the Contract or when authorized by City Engineer in writing, Contractor shall communicate with Project Manager. Contractor shall communicate with Design Consultant, Design Consultant's subconsultants, and separate contractors through Project Manager. The City will communicate with Subcontractors and Suppliers through Contractor.

4.3 *CLAIMS AND DISPUTES*

4.3.1 *Documentation by Project Manager:* Contractor shall submit Claims, including those alleging an error or omission by Project Manager or Design Consultant, to Project Manager for documentation and recommendation to City Engineer.

4.3.2 *Decision of City Engineer:* Upon submission of Claim by Project Manager or Contractor, City Engineer will resolve Claims in accordance with Section 4.4.

4.3.3 *Time Limits on Claims:* Claims by Contractor must be made within 90 days after occurrence of event giving rise to the Claim.

4.3.4 *Continuing the Contract Performance:* Pending final resolution of a Claim including referral to non-binding mediation, unless otherwise agreed in writing, Contractor shall proceed diligently with the performance of the Contract and the City will continue to make payments in accordance with the Contract.

4.3.4.1 Pending final resolution of a Claim including referral to non-binding mediation, Contractor is responsible for safety and protection of physical properties and conditions at site.

4.3.5 *Claims for Concealed or Unknown Conditions:* Concealed or unknown physical conditions include utility lines, other man-made structures, storage facilities, Pollutants and Pollutant Facilities, and the like, but do not include conditions arising from Contractor operations, or failure of Contractor to properly protect and safeguard subsurface facilities. Concealed conditions also

include naturally-occurring soil conditions outside the range of soil conditions identified through geotechnical investigations, but do not include conditions arising from groundwater, rain, or flood.

4.3.5.1 If conditions are encountered at the site which are Underground Facilities or otherwise concealed or unknown conditions which differ materially from:

.1 those indicated by the Contract; or

.2 conditions which Contractor could have discovered through site inspection, geotechnical testing, or otherwise;

then Contractor will give written notice to City Engineer no later than five days after Contractor's first observation of the condition and before condition is disturbed. Contractor's failure to provide notice constitutes a waiver of a Claim.

4.3.5.2 City Engineer will promptly investigate concealed or unknown conditions. If City Engineer determines that conditions at the site are not materially different and that no change in Contract Price or Contract Time is justified, City Engineer will notify Contractor in writing, stating reasons. If City Engineer determines the conditions differ materially and cause increase or decrease in Contractor's cost or time required for performance of part of the Work, City Engineer will recommend an adjustment in Contract Price or Contract Time, or both, as provided in Article 7. Opposition by a Party to the City Engineer's determination must be made within 21 days after City Engineer has given notice of the decision. If the Parties cannot agree on adjustment to Contract Price or Contract Time, adjustment is subject to further proceedings pursuant to Section 4.4.

4.3.6 *Claims for Additional Cost:* If Contractor wishes to make a Claim for increase in Contract Price, Contractor shall give written notice before proceeding with work for which Contractor intends to submit a Claim. Prior notice is not required for Claims relating to an emergency endangering life or property arising under Section 10.4.

4.3.6.1 Contractor may file a Claim in accordance with Section 4.4 if Contractor believes it has incurred additional costs, for the following reasons:

.1 written interpretation of City Engineer;

.2 order by City Engineer to stop the Work when Contractor is not at fault;

.3 suspension of the Work by City Engineer;

.4 termination of the Contract by City Engineer; or

.5 The City's non-compliance with another provision of the Contract.

4.3.6.2 No increase in Contract Price is allowed for delays or hindrances to the Work, except for direct and unavoidable extra costs to Contractor caused by failure of the City to provide information and services, or to make land and materials available, when required of the City under the Contract. Any increase claimed is subject to the provisions of Section 4.4 and Article 7.

4.3.6.3 The City is not liable for Claims for delay when Date of Substantial Completion occurs prior to expiration of Contract Time.

4.3.7 *Claims for Additional Time:* If Contractor wishes to make a Claim for an increase in Contract Time, Contractor shall give written notice as provided in Section 8.2. In case of continuing delay, only one Claim is necessary.

4.4 *RESOLUTION OF CLAIMS AND DISPUTES*

4.4.1 City Engineer will review Claims and take one or more of the following preliminary actions within 30 days of receipt of Claim:

.1 submit a suggested time to meet and discuss the Claim with City Engineer;

.2 reject Claim, in whole or in part, stating reasons for rejection;

.3 recommend approval of the Claim by the other Party;

.4 suggest a compromise; or

.5 take other actions as City Engineer deems appropriate to resolve the Claim.

4.4.2 City Engineer may request additional supporting data from claimant. Party making Claim shall, within 10 days after receipt of City Engineer's request, submit additional supporting data requested by City Engineer.

4.4.3 At any time prior to rendering a written decision regarding a Claim, City Engineer may refer Claim to non-binding mediation. If Claim is resolved, City Engineer will prepare and obtain all appropriate documentation. If Claim is not resolved, City Engineer will take receipt of Claim and begin a new review under Section 4.4.

4.4.4 If Claim is not referred to or settled in non-binding mediation, City Engineer may conduct a hearing and will render a written decision, including findings of fact, within 75 days of receipt of Claim, or a time mutually agreed upon by the Parties in writing. City Engineer may notify Surety and request Surety's

assistance in resolving Claim. City Engineer's decision is final and binding on the Parties.

4.5 *CONDITION PRECEDENT TO SUIT; WAIVER OF ATTORNEY FEES AND INTEREST*

4.5.1 A final decision by the City Engineer is a condition precedent to file suit in any jurisdiction for a claim made in connection with this Contract.

4.5.2 Neither the City nor Contractor may recover attorney fees for any claim brought in connection with this Contract.

4.5.3. Neither the City nor the Contractor may recover interest for any damages claim brought in connection with this Contract except as allowed by TEXAS LOCAL GOVERNMENT CODE Chapter 2251.

4.6 *INTERIM PAYMENT WAIVER & RELEASE*

4.6.1 In accordance with section 4.3, the Contractor shall use due diligence in the discovery and submission of any Claim against the City related to the Contractor's work.

4.6.2 The Contractor shall submit any Claim to the City not later than the 90th day after the occurrence of the event giving rise to the Claim.

4.6.3 Any failure to timely comply with the requirements of section 4.6.2 waives and releases any Claim when the Contractor submits an application for payment after the 90th day.

4.6.4 This waiver does not cover any retainage. In case of any conflict of law, this language shall be revised to the minimum extent necessary to avoid legal conflict. This waiver is made specifically for the benefit of the City.

ARTICLE 5 - SUBCONTRACTORS AND SUPPLIERS

5.1 *AWARD OF SUBCONTRACTS OTHER CONTRACTS FOR PORTIONS OF THE WORK*

5.1.1 Contractor may not contract with a Subcontractor, Supplier, person, or entity that City Engineer has made a reasonable and timely objection to.

5.1.2 If City Engineer has a reasonable objection to person or entity proposed by Contractor, Contractor shall propose another with whom City Engineer has no reasonable objection.

5.1.3 Contractor shall execute contracts with approved Subcontractors, Suppliers, persons, or entities before the Subcontractors or Suppliers begin work under the Contract.

5.1.4 Contractor shall notify City Engineer in writing of any proposed change of Subcontractor, Supplier, person, or entity previously accepted by the City.

5.1.5 Contractor shall make timely payments to Subcontractors and Suppliers for performance of the Contract. Contractor shall protect, defend, and indemnify the City from any claim or liability arising out of Contractor's failure to make the payments. Disputes relating to payment of Business Enterprise Subcontractors or Suppliers will be submitted to arbitration in same manner as other disputes under Business Enterprise subcontracts. Failure of Contractor to comply with decisions of arbitrator may be determined by City Engineer a material breach leading to termination of the Contract.

5.2 *CONTRACTOR RESPONSIBILITY FOR SUBCONTRACTORS*

5.2.1 Contractor is responsible to the City, as may be required by laws and regulations, for all acts and omissions of Subcontractors, Suppliers, and other persons and organizations performing or furnishing any of the Work under direct or indirect contract with Contractor.

5.2.2 Contractor shall make available to each proposed Subcontractor, prior to execution of subcontract, copies of the Contract to which Subcontractor is bound by this Section 5.2. Contractor shall notify Subcontractor of any terms of proposed subcontract which may be at variance with the Contract.

5.2.3 The City's approval of Subcontractor or Suppliers does not relieve Contractor of its obligation to perform, or to have performed to the full satisfaction of the City, the Work required by the Contract.

5.2.4 Unless there is a contractual relationship between Contractor and a Subcontractor or Supplier to the contrary, Contractor shall withhold no more retainage from Subcontractors or Suppliers than City withholds from Contractor under this Agreement.

However, once a Subcontractor or Supplier completes performance, Contractor shall release all retainage to that Subcontractor or Supplier regardless if City continues to retain under this Agreement.

5.2.5 Prior to a Subcontractor or Supplier commencing performance for Contractor, Contractor shall meet with that Subcontractor or Supplier to provide instructions on invoicing procedures, dispute resolution procedures, and statutory rights, such as claim filing procedures under the McGregor Act. Subcontractors and Suppliers must certify to the City Engineer that Contractor has fulfilled the requirements of this Section.

ARTICLE 6 - CONSTRUCTION BY THE CITY OR BY SEPARATE CONTRACTORS

6.1 *THE CITY'S RIGHT TO PERFORM CONSTRUCTION AND TO AWARD SEPARATE CONTRACTS*

6.1.1 The City may perform on-site construction operations related to the Work and as part of the Project with the City's workforce or with separate contractors.

6.2 *COORDINATION*

6.2.1 The City will coordinate activities of the City's workforce and of each separate contractor with work of Contractor, and Contractor shall cooperate with the City and separate contractors.

6.2.1.1 Contractor shall participate with other separate contractors and the City in reviewing their construction schedules when directed to do so by the Project Manager. Contractor shall make revisions to construction schedule and Contract Price deemed necessary after joint review and mutual agreement. Construction schedules shall then constitute schedules to be used by Contractor, separate contractors, and the City, until subsequently revised.

6.2.2 Contractor shall afford to the City and to separate contractors reasonable opportunity for introduction and storage of their materials and equipment, and for performance of their activities.

6.2.3 If part of Contractor's work depends on proper execution of construction or operations by the City or a separate contractor, Contractor shall, prior to proceeding with that portion of the Work, inspect the other work and promptly report to City Engineer apparent discrepancies or defects in the other construction that would render it unsuitable for the proper execution of the Work. Failure of Contractor to report apparent discrepancies or defects in the other construction shall constitute acknowledgment that the City's or separate contractor's completed or partially completed construction is fit and proper to receive Contractor's work, except as to discrepancies or defects not then reasonably discoverable.

6.3 *MUTUAL RESPONSIBILITY*

6.3.1 The responsible party bears the costs caused by delays, by improperly timed activities, or by nonconforming construction.

6.3.2 Contractor shall promptly remedy damage caused by Contractor to completed or partially completed construction or to property of the City or separate contractor.

6.3.3 Claims or disputes between Contractor and other City contractors, or subcontractors of other City contractors, working on the Project must be submitted to binding arbitration in accordance with Construction Industry Arbitration Rules of the American Arbitration Association upon demand by any party to the dispute or by the City.

6.4 *THE CITY'S RIGHT TO CLEAN UP*

6.4.1 If dispute arises among Contractor, separate contractors, and the City as to responsibility under their respective contracts for maintaining premises and surrounding area free from waste materials and rubbish as described in Section 3.21, the City may clean up and allocate cost among those responsible, as determined by City Engineer.

ARTICLE 7 - CHANGES IN THE WORK

7.1 *CHANGES*

7.1.1 Changes in scope of the Work, subject to limitations in Article 7 and elsewhere in the Contract, may be accomplished without invalidating the Contract, or without notifying Surety by:

.1 Change Order;
.2 Work Change Directive; or
.3 Minor Change in the Work.

7.1.2 The following types of Change Orders require City Council approval:

.1 a single Change Order that exceeds five percent of Original Contract Price,
.2 a Change Order which, when added to previous Change Orders, exceeds five percent of Original Contract Price,

.3 a Change Order, in which the total value of increases outside of the general scope of work approved by City Council, when added to increases outside the general scope of work approved by City Council in previous Change Orders, exceeds 40 percent of the Original Contract Price, even if the net increase to the Original Contract Price is five percent or less.

In this context, "increase" means an increase in quantity resulting from the addition of locations not within the scope of work approved by City Council, or the addition of types of goods or services not bid as unit price items.

Nothing in this Section is intended to permit an increase of the Contract Price in excess of the limit set out in TEX. LOC. GOV'T CODE ANN. §252.048 or its successor statute.

7.1.3 Contractor shall proceed promptly to execute changes in the Work provided in Modifications, unless otherwise stated in the Modification.

7.2 *WORK CHANGE DIRECTIVES*

7.2.1 A Work Change Directive cannot change Contract Price or Contract Time, but is evidence that the Parties agree that a change, ordered by directive, will be incorporated in a subsequently issued Change Order as to its effect, if any, on Contract Price or Contract Time.

7.2.2 Failure by Contractor to commence work identified in a Work Change Directive within the time specified by City Engineer, or to complete the work in a reasonable period of time, may be determined by City Engineer to be a material breach of Contract.

7.2.3 A Work Change Directive is used in the absence of total agreement of the terms of a Change Order. Interim payments are made in accordance with Paragraph 9.6.1.

7.2.4 If Contractor signs a Work Change Directive, then Contractor agrees to its terms including adjustment in Contract Price and Contract Time or method for determining them. Agreement by the Parties to adjustments in Contract Price and Contract Time are immediately recorded as a Change Order.

7.2.5 City Engineer, by Work Change Directive, may direct Contractor to take measures as necessary to expedite construction to achieve Date of Substantial Completion on or before expiration of Contract Time. When the Work is expedited solely for convenience of the City and not due to Contractor's failure to prosecute timely completion of the Work, then Contractor is entitled to an adjustment in Contract Price equal to actual costs determined in accordance with Article 7.

7.3 *ADJUSTMENTS IN CONTRACT PRICE*

7.3.1 Adjustments in Contract Price are accomplished by Change Order and are based on one of the following methods:

.1 mutual acceptance of fixed price, properly itemized and supported by sufficient data to permit evaluation;

.2 unit prices stated in the Contract or subsequently agreed upon;

.3 cost to be determined in a manner agreed upon by the Parties and mutually acceptable fixed or percentage fee; or

	Overhead	Profit
to Contractor for change in the Work performed by Subcontractors:	10 percent	0 percent
to first tier Subcontractors for change in the Work performed by its Subcontractors:	10 percent	0 percent
to Contractor and Subcontractor for change in the Work performed by their respective firms:	10 percent	5 percent

.4 as provided in Paragraph 7.3.2.

7.3.2 If Contractor does not agree with a change in Contract Price or Contract Time or the method for adjusting them specified in the Work Change Directive within 21 days from date of the Work Change Directive's issuance, method and adjustment are determined by City Engineer. If Project Manager or Contractor disagree with City Engineer's determination they then may file a Claim in accordance with Section 4.4.

7.3.2.1 If City Engineer determines a method and adjustment in Contract Price under Paragraph 7.3.2, Contractor shall provide, in a form as City Engineer may prescribe, appropriate supporting data

for items submitted under Paragraph 7.3.2. Failure to submit the data within 21 days of request for the data by City Engineer shall constitute waiver of a Claim.

7.3.2.2 Unless otherwise provided in the Contract, costs for the purposes of this Paragraph 7.3.2 are limited to the following:

.1 costs of labor, including labor burden as stated below for social security, unemployment insurance, customary and usual fringe benefits required by agreement or custom, and Workers' Compensation insurance;
  .1 the maximum labor burden applied to costs of labor for changes in the Work is 55 percent;

.2 costs of materials, supplies, and equipment, including cost of transportation, whether incorporated or consumed;

.3 rental costs of machinery and equipment, exclusive of hand tools, whether rented from Contractor or others, with prior approval of City Engineer;

.4 costs of premiums for Bonds and insurance and permit fees related to the change in the Work;

.5 additional costs of direct supervision of work and field office personnel directly attributable to the change; and

.6 allowances for overhead and profit as stated below.
  .1 the maximum allowances for overhead and profit on increases due to Change Orders:
  .2 for changes in the Work performed by Contractor and Subcontractors, allowance for overhead and profit are applied to an amount equal to cost of all additions less cost of all deletions to the Work. Allowance for overhead to Contractor and first tier Subcontractors on changes performed by Subcontractors are applied to an amount equal to the sum of all increases to the Work by applicable Subcontractors.

7.3.3 If the City deletes or makes a change, which results in a net decrease in Contract Price, the City is entitled to a credit calculated in accordance with Paragraphs 7.3.1 and 7.3.2 and Subparagraphs 7.3.2.1, and 7.3.2.2.1 through 7.3.2.2.5. When both additions and credits covering related work or substitutions are involved in a change, allowance for overhead and profit is figured on the basis of a net increase, if any, with respect to that change in accordance with Subparagraph 7.3.2.2.6.

7.3.4 When Contractor agrees with the determination made by City Engineer concerning adjustments in Contract Price and Contract Time, or the Parties otherwise reach agreement upon the adjustments, the agreement will be immediately recorded by Change Order.

7.4 *MINOR CHANGES IN THE WORK*

7.4.1 A Minor Change in Work is binding on the Parties. Contractor shall acknowledge, in a written form acceptable to City Engineer, that there is no change in Contract Time or Contract Price and shall carry out the written orders promptly.

ARTICLE 8 - TIME

8.1 *PROGRESS AND COMPLETION*

8.1.1 Time is of the essence in the Contract. By executing the Contract, Contractor agrees that Contract Time is a reasonable period for performing the Work.

8.1.2 *Computation of Time:* In computing any period of time prescribed or allowed by the General Conditions, the day of the act, event, or default after which designated period of time begins to run is not to be included. Last day of the period so computed is to be included, unless it is a Sunday or Legal Holiday, in which event the period runs until end of next day which is not a Sunday or Legal Holiday. Sundays and Legal Holidays are considered to be days and are to be included in all other time computations relative to Contract Time.

8.1.3 Contractor may not commence the Work prior to the effective date of insurance and Bonds required by Article 11.

8.1.4 Contractor shall proceed expeditiously and without interruption, with adequate forces, and shall achieve Date of Substantial Completion within Contract Time.

8.1.5 Should progress of the Work fall behind construction schedule, except for reasons stated in Paragraph 8.2.1, Contractor shall promptly submit at the request of Project Manager, updated construction schedule to City Engineer for approval. Contractor's failure to submit updated schedule may, at City Engineer's discretion, constitute a material

breach of the Contract. Contractor shall take action necessary to restore progress by working the hours, including night shifts and lawful overtime operations as necessary, to achieve Date of Substantial Completion within Contract Time.

8.1.6 Except in connection with safety or protection of persons or the Work or property at the site or adjacent to the site, and except as otherwise indicated in the Contract, all the Work at the site will be performed Monday through Saturday between the hours of 7:00 a.m. and 7:00 p.m. Contractor may not perform work between 7:00 p.m. and 7:00 a.m., on a Sunday, or on a Legal Holiday, without giving City Engineer 24-hour prior written notice and receiving written consent of City Engineer.

8.2 *DELAYS AND EXTENSIONS OF TIME*

8.2.1 Contractor may request extension of Contract Time for a delay in performance of work that arises from causes beyond control and without fault or negligence of Contractor. Examples of these causes are:

.1 acts of God or of the public enemy,
.2 acts of government in its sovereign capacity,
.3 fires,
.4 floods,
.5 epidemics,
.6 quarantine restrictions,
.7 strikes,
.8 freight embargoes,
.9 unusually severe weather; and
.10 discovery of Pollutants or Pollutant Facilities at the site.

8.2.2 For any reason other than those listed in Section 4.3.6.2, if the Contractor's work is delayed in any manner or respect, the Contractor shall have no claim for damages and shall have no right of additional compensation from the City by reason of any delay or increased expense to the Contractor's work, except for an extension of time as provided in this provision.

8.2.3 Contractor may request an extension of Contract Time for delay only if:

.1 delay is caused by failure of Subcontractor or Supplier to perform or make progress; and
.2 cause of failure is beyond control of both Contractor and Subcontractor or Supplier.

8.2.4 Claims relating to Contract Time must be made in accordance with Paragraph 4.3.7.

8.2.5 Claims for extending or shortening Contract Time are based on written notice promptly delivered by the Party making Claim to other Party. Claim must accurately describe occurrence generating Claim, and a statement of probable effect on progress of the Work.

8.2.6 Claims for extension of Contract Time are considered only when a Claim is filed within the time limits stated in Paragraph 4.3.3.

.1 Notwithstanding paragraph 4.3.3, an extension of time for delays under this paragraph may be granted only upon written application by the Contractor within 48 hours from the claimed delay.

8.2.7 Written notice of Claim must be accompanied by claimant's written statement that adjustment claimed is entire adjustment to which claimant is entitled as a result of the occurrence of the event. When the Parties cannot agree, Claims for adjustment in Contract Time are determined by City Engineer in accordance with Section 4.4.

8.2.8 Adjustments to Contract Time are accomplished by Change Order.

ARTICLE 9 - PAYMENTS AND COMPLETION

9.1 *UNIT PRICE WORK*

9.1.1 Where the Contract provides that all or part of the Work is based on Unit Prices, the Original Contract Price includes, for all Unit Price work, an amount equal to the sum of Unit Prices times Unit Price Quantities for each separately identified item of Unit Price work.

9.1.2 Each Unit Price includes an amount to cover Contractor's overhead and profit for each separately identified item.

9.1.3 The Contractor may not make a Claim against the City for excess or deficiency in Unit Price Quantities provided in the Contract, except as provided in Subparagraph 9.1.4.1. Payment at the prices stated in the Contract is in full for the completed work. Contractor is not entitled to additional payment for materials, supplies, labor, tools, machinery and all other expenditures incidental to satisfactory completion of the Work.

9.1.4 City Engineer may increase or decrease quantities of the Work within limitations

stated in Paragraph 7.1.2. Contractor is entitled to payment for actual quantities of items provided at Unit Prices set forth in the Contract.

9.1.5 Where the final quantity of work performed by Contractor on Major Unit Price Work item differs by more than 25 percent from quantity of the item stated in the Contract, a Party may request an adjustment in Unit Price, for the portion that differs by more than 25 percent, by a Change Order under Section 7.3.

9.2 *ESTIMATES FOR PAYMENT, UNIT PRICE WORK*

9.2.1 Following the day of each month indicated in the Contract, Project Manager will prepare a Certificate for Payment for the preceding monthly period based on estimated units of work completed. Prior to preparing Certificate of Payment, Contractor shall have submitted to City Engineer on a form approved by the Director of the Mayor's Office of Business Opportunity, evidence satisfactory to the City Engineer of payments made to Subcontractors and Suppliers for the month preceding the month for which the Certificate for Payment is prepared.

9.2.2 Before final completion, City Engineer will review and confirm with Contractor the actual final installed Unit Price quantities. City Engineer's determination of actual final installed Unit Price quantities will be included in the final Certificate for Payment and any previous underpayments and overpayments will be reconciled with the actual final Unit Price quantities. Contractor shall file written notice of intent to appeal, if any, City Engineer's determination within 10 days of receipt of final Certificate for Payment. Upon expiration of the 10-day period, City Engineer's decision is final and binding on the Parties. If Contractor submits notice within the 10-day period, Contractor shall submit a Claim in accordance with Section 4.4.

9.3 *STIPULATED PRICE WORK*

9.3.1 For work contracted on a Stipulated Price basis, 10 days before submittal of first Application for Payment, Contractor shall submit to City Engineer a Schedule of Values allocated to various portions of the Work, prepared in the form and supported by the data as City Engineer may require to substantiate its accuracy. This schedule, as approved by City Engineer, is used as a basis for approval of Contractor's Applications for Payment.

9.4 *APPLICATIONS FOR PAYMENT, STIPULATED PRICE WORK*

9.4.1 For work contracted on a Stipulated Price basis, Contractor shall submit Applications for Payment to City Engineer each month on a form acceptable to City Engineer in accordance with Schedule of Values. Application must indicate percentages of completion of each portion of the Work listed in Schedule of Values as of the end of the period covered by the Application for Payment.

9.4.2 Applications for Payment must be supported by substantiating data as City Engineer may require and must reflect retainages as provided below. Evidence satisfactory to the City Engineer of payments made to Subcontractors and Suppliers for the month preceding the month for which the Application for Payment is submitted must accompany each Application for Payment on a form approved by the Director of Mayor's Office of Business Opportunity. Application must be sworn and notarized.

9.5 *CERTIFICATES FOR PAYMENT*

9.5.1 City Engineer will, within 10 days after the date specified in the Contract for Unit Price work, or upon receipt of Contractor's Application for Payment for Stipulated Price work, issue a Certificate for Payment for work based on amount which City Engineer determines is properly due, with copy to Contractor.

9.5.2 Unless otherwise provided in the Contract, payment for completed work and for properly stored Products is conditioned upon compliance with procedures satisfactory to City Engineer to protect the City's interests. Procedures will include applicable insurance, storage, and transportation to site for materials and equipment stored off-site. Contractor is responsible for maintaining materials and equipment until Date of Substantial Completion.

9.5.3 Contractor shall document its use of Ultra Low Sulfur Diesel Fuel by providing invoices and receipts evidencing Contractor's use.

9.6 *COMPUTATIONS OF CERTIFICATES FOR PAYMENT*

9.6.1 Subject to the provisions of the Contract, the amount of each Certificate for Payment is calculated as follows:

.1 that portion of Contract Price allocated to completed work as determined by:

.1 multiplying the percentage of completion of each portion of the Work listed in the Schedule of

Values by the value of that portion of the Work, or

.2 multiplying Unit Price quantities Installed times the Unit Prices listed in the Contract;

.2 plus progress payments for completed work that has been properly authorized by Modifications;

.3 less retainage of five percent;

.4 plus actual costs, properly substantiated by certified copies of invoices and freight bills, of non-perishable materials and equipment delivered and properly stored, if approved in advance by Project Manager, less 15 percent;

.5 less any previous payments by the City.

9.7 *DECISIONS TO WITHHOLD CERTIFICATION*

9.7.1 City Engineer may decline to certify payment and may withhold payment in whole or in part to the extent reasonably necessary to protect the City if, in City Engineer's opinion, there is reason to believe that:

.1 nonconforming work has not been remedied;

.2 the Work cannot be completed for unpaid balance of Contract Price;

.3 there is damage to the City or another contractor;

.4 the Work will not be completed within Contract Time and that unpaid balance will not be adequate to cover actual and liquidated damages;

.5 probable evidence that third party claims will be filed in court, in arbitration, or otherwise;

.6 Contractor has failed to make payments to Subcontractors or Suppliers for labor, material, or equipment; or

.7 Contractor has persistently failed to carry out work in accordance with the Contract.

.8 Contractor has not paid Subcontractors or Suppliers because of a payment dispute; or

.9 Contractor has failed to provide satisfactory evidence described in Paragraphs 9.2.1, 9.4.2, and 9.8.2.

9.7.2 When the above reasons for withholding certification are removed, certification will be made for amounts previously withheld.

9.7.3 City Engineer may decline to certify payment and may withhold request for payment in whole or in part upon failure of Contractor to submit initial construction schedule or monthly schedule updates, as required in Paragraphs 3.15.1 and 3.15.3.

9.8 *PROGRESS PAYMENTS*

9.8.1 The City will make payment, in an amount certified by City Engineer, within 20 days after City Engineer has issued a Certificate for Payment.

9.8.2 The City has no obligation to pay or to facilitate the payment to a Subcontractor or Supplier, except as may otherwise be required by law. Contractor shall comply with the prompt payment requirements of Chapter 2251 of the Government Code. State law requires payment of Subcontractors and Suppliers by Contractor within 7 calendar days of Contractor's receipt of payment from the City, unless there is a payment dispute between Contractor and a Subcontractor or Supplier evidenced on a form approved by the Director of Mayor's Office of Business Opportunity and submitted to the City Engineer each month with Application for Payment or Estimate for Payment.

9.8.2.1 The City may, upon request and at the discretion of City Engineer, furnish to Subcontractor information regarding percentages of completion or the amounts applied for by Contractor, and action taken thereon by the City because of work done by the Subcontractor.

9.8.2.2 Contractor shall prepare and submit to City Engineer a Certification of Payment to Subcontractors and Suppliers form to be attached to each monthly Estimate for Payment or Application for Payment.

9.8.3 A Certificate for Payment, a progress payment, or partial or entire use or occupancy of the Work by the City, does not constitute acceptance of work which is not in accordance with the Contract.

9.9 *DATE OF SUBSTANTIAL COMPLETION*

9.9.1 When Contractor considers the Work, or a portion thereof designated by City Engineer, to be substantially complete, Contractor shall prepare and submit to Project Manager a comprehensive punch list of items to be completed or corrected. Failure to include an item on the punch list does not

alter the responsibility of Contractor to comply with the Contract.

9.9.1.1 By submitting the punch list to Project Manager, Contractor represents that work on the punch list will be completed within the time provided for in Subparagraph 9.9.4.3.

9.9.2 Upon receipt of Contractor's punch list, Project Manager will inspect the Work, or designated portion thereof, to verify that the punch list contains all items needing completion or correction. If Project Manager's inspection discloses items not on Contractor's punch list, the items must be added to the punch list of items to be completed or corrected. If Project Manager's inspection reveals that Contractor is not yet substantially complete, Contractor shall complete or correct the deficiencies and request another inspection by Project Manager. The City may recover the costs of re-inspection from Contractor.

9.9.3 Prior to City Engineer's issuing a Certificate of Substantial Completion, Contractor shall also provide:

.1 Certificate of Occupancy for new construction, or Certificate of Compliance for remodeled work, as applicable, and

.2 compliance with Texas Accessibility Standards through state inspection of the Work, if required. If Contractor calls for inspection in a timely manner and the inspection is delayed through no fault of Contractor, and City Engineer so confirms, City Engineer may, upon request by Contractor, add the inspection to the punch list in Paragraph 9.9.2 and issue a Certificate of Substantial Completion.

9.9.4 When the Work, or designated portion thereof, is determined by City Engineer to be sufficiently complete in accordance with the Contract so the City can occupy or utilize the Work, or designated portion thereof, for the purpose for which it is intended, City Engineer will prepare a Certificate of Substantial Completion that incorporates the punch list in Paragraph 9.9.2 and establishes:

.1 Date of Substantial Completion;

.2 responsibilities of the Parties for security, maintenance, heating, ventilating and air conditioning, utilities, damage to the Work, and insurance; and

.3 fixed time within which Contractor shall complete all items on punch list of items to be corrected accompanying the certificate.

9.9.5 Warranties required by the Contract shall commence on the Date of Substantial Completion unless otherwise provided by City Engineer in Certificate of Substantial Completion. Warranties may not commence on items not substantially completed.

9.9.6 After Date of Substantial Completion and upon application by Contractor and approval by City Engineer, the City may make payment, reflecting adjustment in retainage, if any, as follows:

.1 with the consent of Surety, the City may increase payment to Contractor to 96 percent of Contract Price, less value of items to be completed and accrued liquidated damages.

9.9.7 Contractor shall complete or correct the items in Paragraph 9.9.2 within the time period set out in the Certificate of Substantial Completion. If Contractor fails to do so, the City may issue a Notice of Noncompliance and proceed according to Section 2.5.

9.10 *PARTIAL OCCUPANCY OR USE*

9.10.1 The City may occupy or use any completed or partially completed portion of the Work at any stage, provided the occupancy or use is consented to by Contractor and Contractor's insurer and authorized by public authorities having jurisdiction over the Work. Consent of Contractor to partial occupancy or use may not be unreasonably withheld.

9.10.2 Immediately prior to the partial occupancy or use, Project Manager and Contractor shall jointly inspect the area to be occupied or portion of the Work to be used to determine and record condition of the Work.

9.10.3 Partial occupancy or use of a portion of the Work does not constitute acceptance of work not in compliance with requirements of the Contract.

9.11 *FINAL COMPLETION AND FINAL PAYMENT*

9.11.1 Contractor shall review the Contract and inspect the Work prior to Contractor notification to City Engineer that the Work is complete and ready for final inspection. Contractor shall submit affidavit that the Work has been inspected and that the Work is complete in accordance with requirements of the Contract.

9.11.2 Project Manager will make final inspection within 15 days after receipt of Contractor's written notice that the Work is ready for final inspection and acceptance. If Project Manager finds the Work has been completed in accordance with the Contract, Contractor shall submit items set out in Paragraph 9.11.4 and, for stipulated price contracts, a final Application for Payment. City Engineer will, within 10 days, issue Certificate of Final Completion stating that to the best of City Engineer's knowledge, information, and belief, the Work has been completed in accordance with the Contract, and will recommend acceptance of the Work by City Council.

9.11.3 Should work be found not in compliance with requirements of the Contract, City Engineer will notify Contractor in writing of items of noncompliance. Upon inspection and acceptance of the corrections by Project Manager, compliance with all procedures of Paragraph 9.11.2, and Contractor's submission of the items set out in Paragraph 9.11.4, the City Engineer will issue Certificate of Final Completion to Contractor as provided in Paragraph 9.11.2.

9.11.4 Contractor shall submit the following items to City Engineer before City Engineer will issue a Certificate of Final Completion:

.1 affidavit that payrolls, invoices for materials and equipment, and other indebtedness of Contractor connected with the Work, less amounts withheld by the City, have been paid or otherwise satisfied. If required by City Engineer, Contractor shall submit further proof including waiver or release of lien or claims from laborers or Suppliers of Products;

.2 certificate evidencing that insurance required by the Contract to remain in force after final payment is currently in effect, will not be canceled or materially changed until at least 30 days written notice has been given to the City;

.3 written statement that Contractor knows of no substantial reason that insurance will not be renewable to cover correction and warranty period required by the Contract;

.4 consent of Surety to final payment; and

.5 copies of record documents, maintenance manuals, tests, inspections, and approvals.

Upon City Engineer's issuance of a Certificate of Final Completion, Contractor may request increase in payment to 99 percent of Contract Price, less accrued liquidated damages.

9.11.5 If Contractor fails to submit required items in Paragraph 9.11.4 within 10 days of Project Manager's inspection of the Work under Paragraph 9.11.2 or Paragraph 9.11.3, City Engineer may, but is not obligated to:

.1 deduct liquidated damages accrued from monies held;

.2 proceed to City Council for acceptance of the Work, minus some or all of the items Contractor fails to submit under Paragraph 9.11.4; and,

.3 upon acceptance by City Council of the portion of the Work completed, make final payment as set out in Paragraph 9.11.8.

9.11.6 If final completion is materially delayed through no fault of Contractor, or by issuance of Change Orders affecting date of final completion, and City Engineer so confirms, the City may, upon application by Contractor and certification by City Engineer, and without terminating the Contract, make payment of balance due for that portion of the Work fully completed and accepted.

9.11.7 If remaining balance due for work not corrected is less than retainage stipulated in the Contract, Contractor shall submit to City Engineer written consent of Surety to payment of balance due for that portion of the Work fully completed and accepted, prior to certification of the payment. The payment is made under terms governing final payment, except that it does not constitute waiver of Claims.

9.11.8 The City will make final payment to Contractor within 30 days after acceptance of the Work by City Council, subject to limitations, if any, as stated in the Contract.

9.11.9 Acceptance of final payment by Contractor shall constitute a waiver of all Claims, whether known or unknown, by Contractor, except those previously made in writing and identified by Contractor as unsettled at time of final Application for Payment.

9.12 *LIQUIDATED DAMAGES*

9.12.1 Contractor, Surety, and the City agree that failure to complete the Work within Contract Time will cause damages to the City and that actual damages from harm are difficult to estimate accurately. Therefore, Contractor, Surety, and the City agree that Contractor and Surety are liable for and shall pay to the City the amount stipulated in

Supplementary Conditions as liquidated damages, and that the amount of damages fixed therein is a reasonable forecast of just compensation for harm to the City resulting from Contractor's failure to complete the Work within Contract Time. The amount stipulated will be paid for each day of delay beyond Contract Time until Date of Substantial Completion.

9.12.2 Contractor shall pay the City an amount equal to $1,200.00 per diesel operating vehicle or piece of motorized equipment per incident of high sulfur diesel fuel usage.

ARTICLE 10 - SAFETY PRECAUTIONS

10.1 *SAFETY PROGRAMS*

10.1.1 Contractor is responsible for initiating, maintaining, and supervising all safety precautions and programs in connection with performance of the Contract. Contractor shall submit a safety program to City Engineer prior to mobilizing for the Work, and is solely responsible for safety, efficiency, and adequacy of ways, means, and methods, and for damage which might result from failure or improper construction, maintenance, or operation performed by Contractor.

10.2 *POLLUTANTS AND POLLUTANT FACILITIES*

10.2.1 If Contractor encounters material on-site which it reasonably believes to be a Pollutant or facilities which it reasonably believes to be a Pollutant Facility, Contractor shall immediately stop work in affected area and immediately notify City Engineer, confirming the notice thereafter in writing.

10.2.2 If City Engineer determines that the material is a Pollutant or facility is a Pollutant Facility, work in affected area may not be resumed except by Modification, and only if the work would not violate applicable laws or regulations.

10.2.3 If City Engineer determines that the material is not a Pollutant or a facility is not a Pollutant Facility, work in affected area will be resumed upon issuance of a Modification.

10.2.4 Contractor is not required to perform, unless authorized by Change Order, work relating to Pollutants or Pollutant Facilities except for that work relating to Pollutants or Pollutant Facilities specified in the Contract.

10.3 *SAFETY OF THE ENVIRONMENT, PERSONS, AND PROPERTY*

10.3.1 Contractor shall take reasonable precautions for safety and shall provide reasonable protection to prevent damage, injury, or loss from all causes, to:

.1 employees performing work on-site, and other persons who may be affected thereby;

.2 work, including Products to be incorporated into the Work, whether in proper storage, under control of Contractor or Subcontractor; and

.3 other property at or adjacent to the site, such as trees, shrubs, lawns, walks, pavements, roadways, structures, utilities, and Underground Facilities not designated for removal or replacement in course of construction.

10.3.2 Contractor shall give notices and comply with applicable laws, ordinances, rules, regulations, and lawful orders of public authorities bearing on safety of persons, property, or environment.

10.3.2.1 Contractor shall comply with requirements of Underground Facility Damage Prevention and Safety Act TEX. UTIL. CODE ANN. Ch. 251 (Vernon Supp. 2002).

10.3.2.2 Contractor shall comply with all safety rules and regulations of the Federal Occupational Health and Safety Act of 1970 and subsequent amendments (OSHA).

10.3.3 Contractor shall erect and maintain, as required by existing conditions and performance of the Contract, reasonable safeguards for safety and protection of persons and property, including posting danger signs and other warnings against hazards, promulgating safety regulations, and notifying owners and users of adjacent sites and utilities.

10.3.4 Contractor shall designate responsible member of Contractor's organization at site whose duty is prevention of accidents. This person will be Contractor’s Superintendent unless otherwise designated by Contractor in writing to City Engineer.

10.3.5 Contractor shall prevent windblown dust and may not burn or bury trash debris or waste products on-site. Contractor shall prevent environmental pollution, including but not limited to particulates, gases and noise, as a result of the Work.

10.3.6 When use or storage of hazardous materials or equipment, or unusual methods are necessary for execution of the Work, Contractor shall exercise utmost care and carry on the activities under supervision of properly qualified personnel.

10.3.7 Contractor shall promptly remedy damage and loss to property referred to in Subparagraphs 10.3.1.2 and 10.3.1.3, caused in whole or in part by Contractor, or Subcontractors, which is not covered by insurance required by the Contract. Contractor is not required to remedy damage or loss attributable to the City, Design Consultant, or other contractors.

10.4 *EMERGENCIES*

10.4.1 In emergencies affecting safety of persons or property, Contractor shall act at Contractor's discretion to prevent imminent damage, injury, or loss. Additional compensation or extension of time claimed by Contractor because of emergencies are determined as provided in Article 7.

ARTICLE 11 - INSURANCE AND BONDS

11.1 *GENERAL INSURANCE REQUIREMENTS*

11.1.1 With no intent to limit Contractor's liability under indemnification provisions set forth in Paragraphs 3.25 and 3.26, Contractor shall provide and maintain in full force and effect during term of the Contract and all extensions and amendments thereto, at least the following insurance and available limits of liability.

11.1.2 If any of the following insurance is written as “claims made” coverage and the City is required to be carried as additional insured, then Contractor's insurance shall include a two-year extended discovery period after last date that Contractor provides any work under the Contract.

11.1.3 Aggregate amounts of coverage, for purposes of the Contract, are agreed to be amounts of coverage available during fixed 12-month policy period.

11.2 *INSURANCE TO BE PROVIDED BY CONTRACTOR*

11.2.1 *Risks and Limits of Liability:* Contractor shall provide at a minimum insurance coverage and limits of liability set out in Table 1.

11.2.1.1 If Limit of Liability for Excess Coverage is $2,000,000 or more, Limit of Liability for Employer's Liability may be reduced to $500,000.

11.2.2 *Form of Policies:* Insurance may be in one or more policies of insurance, form of which is subject to approval by City Engineer. It is agreed, however, that nothing City Engineer does or fails to do with regard to insurance policies relieves Contractor from its duties to provide required coverage and City Engineer's actions or inactions will never be construed as waiving the City’s rights.

11.2.3 *Issuers of Policies:* Issuer of any policy shall have:

.1 a Certificate of Authority to transact business in Texas, or

.2 have a Best's rating of at least B+ and a Best's Financial Size Category of Class VI or better, according to the most current edition of Best's Key Rating Guide, and the issuer must be an eligible nonadmitted insurer in the State of Texas.

Each insurer is subject to approval by City Engineer in City Engineer’s sole discretion as to conformance with these requirements, pursuant to Paragraph 11.2.2.

11.2.4 *Insured Parties:* Each policy, except those for Workers' Compensation and Owner's and Contractor's Protective Liability, must name the City, its officers, agents, and employees as additional insured parties on original policy and all renewals or replacements during term of the Contract. The City's status as additional insured under Contractor's insurance does not extend to instances of sole negligence of the City unmixed with any fault of Contractor.

11.2.5 *Deductibles:* Contractor assumes and bears any claims or losses to extent of deductible amounts and waives any claim it may ever have for same against the City, its officers, agents, or employees.

11.2.6 *Cancellation:* Contractor shall notify the Director in writing 30 days prior to any cancellation or material change to Contractor’s insurance coverage. Within the 30 day period, Contractor shall provide other suitable policies in lieu of those about to be canceled or nonrenewed so as to maintain in effect the required coverage. If Contractor does not comply with this requirement, the City Engineer, at his or her sole discretion, may:

.1 immediately suspend Contractor from any further performance under this Contract and begin procedures to terminate for default, or
.2 purchase the required insurance with City funds and deduct the cost of the premiums from amounts due to Contractor under this Contract.

11.2.7 *Subrogation:* Each policy except Owner's and Contractor's Protective Liability must contain endorsement to the effect that issuer waives any claim or right in nature of subrogation to recover against the City, its officers, agents, or employees.

11.2.8 *Endorsement of Primary Insurance:* Each policy, except Workers' Compensation policies, must contain an endorsement that the policy is primary insurance to any other insurance available to additional insured with respect to claims arising hereunder.

11.2.9 *Liability for Premium:* Contractor is solely responsible for payment of all insurance premium requirements hereunder and the City is not obligated to pay any premiums.

11.2.10 *Additional Requirements for Workers' Compensation Insurance Coverage:* Contractor shall, in addition to meeting the obligations set forth in Table 1, maintain throughout the term of the Contract Workers' Compensation coverage as required by statute, and Contractor shall specifically comply with requirements set forth in Paragraph 11.2.10. The definitions set out below shall apply only for purposes of this Paragraph 11.2.10.

11.2.10.1 Definitions:
.1 *Certificate of Coverage:* A copy of certificate of insurance, or coverage agreement (TWCC-81, TWCC-82, TWCC-83, or TWCC-84), showing statutory Workers' Compensation insurance coverage for Contractor's, Subcontractor's, or Supplier's employees providing services for the duration of the Contract.
.2 *Duration of the Work:* Includes the time from Date of Commencement of the Work until Contractor's work under the Contract has been completed and accepted by City Council.
.3 *Persons providing services for the Work (Subcontractor in Texas Labor Code § 406.096):* includes all persons or entities performing all or part of services Contractor has undertaken to perform on the Work, regardless of whether that person contracted directly with Contractor and regardless of whether that person has employees. This includes, without limitation, independent contractors, subcontractors, leasing companies, motor carriers, owner-operators, employees of the entity, or employees of entity which furnishes persons to provide services on the Work. Services include, without limitation, providing, hauling, or delivering equipment or materials, or providing labor, transportation, or other service related to the Work. Services do not include activities unrelated to the Work, such as food/beverage vendors, office supply deliveries, and delivery of portable toilets.

11.2.10.2 Contractor shall provide coverage, based on proper reporting of classification codes and payroll amounts and filing of coverage agreements, which meets the statutory requirements of TEX. LAB. CODE ANN., Section 401.011(44) for employees of Contractor providing services on the Work, for duration of the Work.

11.2.10.3 Contractor shall provide a Certificate of Coverage to the City prior to being awarded the Contract.

11.2.10.4 If coverage period shown on Contractor's original Certificate of Coverage ends during duration of the Work, Contractor shall file new Certificate of Coverage with the City showing that coverage has been extended.

11.2.10.5 Contractor shall obtain from each person providing services on the Work, and provide to City Engineer:
.1 Certificate of Coverage, prior to that person beginning work on the Work, so the City will have on file Certificates of Coverage showing coverage for all persons providing services on the Work; and
.2 no later than seven days after receipt by Contractor, new Certificate of Coverage showing extension of coverage, if coverage period shown on current Certificate of Coverage ends during the duration of the Work.

11.2.10.6 Contractor shall retain all required Certificates of Coverage for the duration of the Work and for one year thereafter.

11.2.10.7 Contractor shall notify City Engineer in writing by certified mail or personal delivery, within 10 days after Contractor knew or should have known, of

any change that materially affects provision of coverage of any person providing services on the Work.

11.2.10.8 Contractor shall post on-site a notice, in text, form and manner prescribed by Texas Workers' Compensation Commission, informing all persons providing services on the Work that they are required to be covered, and stating how person may verify coverage and report lack of coverage.

11.2.10.9 Contractor shall contractually require each person with whom it contracts to provide services on the Work to:

.1 provide coverage, based on proper reporting of classification codes, payroll amounts and filing of any coverage agreements, which meets statutory requirements of TEX. LAB. CODE ANN., Section 401.011(44) for all its employees providing services on the Work, for the duration of the Work;

.2 provide to Contractor, prior to that person's beginning work on the Work, a Certificate of Coverage showing that coverage is being provided for all employees of the person providing services on the Work, for the duration of the Work;

.3 provide Contractor, prior to the end of the coverage period, a new Certificate of Coverage showing extension of coverage, if the coverage period shown on the current Certificate of Coverage ends during the duration of the Work;

.4 obtain from each other person with whom it contracts, and provide to Contractor: (1) Certificate of Coverage, prior to other person's beginning work on the Work; and (2) new Certificate of Coverage showing extension of coverage, prior to end of coverage period, if coverage period shown on the current Certificate of Coverage ends during duration of the Work.

.5 retain all required Certificates of Coverage on file for the duration of the Work and for one year thereafter;

.6 notify City Engineer in writing by certified mail or personal delivery within 10 days after person knew, or should have known, of change that materially affects provision of coverage of any person providing services on the Work; and

.7 contractually require each person with whom it contracts to perform as required by Paragraphs 11.2.10.1 through 11.2.10.7, with Certificates of Coverage to be provided to person for whom they are providing services.

11.2.10.10 By signing the Contract or providing or causing to be provided a Certificate of Coverage, Contractor is representing to the City that all employees of Contractor who will provide services on the Work will be covered by Workers' Compensation coverage for the duration of the Work, that coverage will be based on proper reporting of classification codes and payroll amounts, and that all coverage agreements will be filed with appropriate insurance carrier. Contractor is not allowed to self-insure Workers' Compensation. Contractor may be subject to administrative penalties, criminal penalties, civil penalties, or other civil actions for providing false or misleading information.

11.2.10.11 Contractor's failure to comply with Paragraph 11.2.10 is a breach of the Contract by Contractor, which entitles the City to declare the Contract void if Contractor does not remedy breach within 10 days after receipt of notice of breach from City Engineer.

11.2.11 *Subcontractor Insurance Requirements:* Contractor shall require Subcontractors and Suppliers to obtain Commercial General Liability, Workers' Compensation, Employer's Liability and Automobile Liability coverage that meets all the requirements of Paragraph 11.2. The amount must be commensurate with the amount of the subcontract, but not less than $500,000 per occurrence. Contractor shall require all Subcontractors with whom it contracts directly, whose subcontracts exceed $100,000, to provide proof of Commercial General Liability and Automobile Liability insurance coverage meeting the above requirements. Contractor shall comply with all requirements set out under Paragraph 11.2.10 as to Workers' Compensation Insurance for all Subcontractors and Suppliers.

TABLE 1
REQUIRED COVERAGE

(Coverage)	(Limit of Liability)
.1 Workers' Compensation	Statutory Limits for Workers' Compensation
.2 Employer's Liability	Bodily Injury by Accident $1,000,000 (each accident) Bodily Injury by Disease $1,000,000 (policy limit) Bodily Injury by Disease $1,000,000 (each employee)
.3 Commercial General Liability: Including Contractor's Protective, Broad Form Property Damage, Contractual Liability, Explosion, Underground and Collapse, Bodily Injury, Personal Injury, Products, and Completed Operations (for a period of one year following completion of the Work).	Combined single limit of $1,000,000 (each occurrence), subject to general aggregate of $2,000,000; Products and Completed Operations $1,000,000 aggregate.
.4 Owner's and Contractor's Protective Liability	$1,000,000 combined single limit each Occurrence/ aggregate
.5 Installation Floater (Unless alternative coverage approved by City Attorney)	Value of stored material or equipment, listed on Certificates of Payments, but not yet incorporated into the Work
.6 Automobile Liability Insurance: (For automobiles furnished by Contractor in course of his performance under the Contract, including Owned, Non-owned, and Hired Auto coverage)	$1,000,000 combined single limit each occurrence for (1) Any Auto or (2) All Owned, Hired, and Non-Owned Autos
.7 Excess Coverage	$1,000,000 each occurrence/combined aggregate in excess of limits specified for Employer's Liability, Commercial General Liability, and Automobile Liability
Defense costs are excluded from face amount of policy. Aggregate Limits are per 12-month policy period unless otherwise indicated.	

11.3 *PROOF OF INSURANCE*

11.3.1 Prior to commencing services and at time during the term of the Contract, Contractor shall furnish City Engineer with Certificates of Insurance, along with Affidavit from Contractor confirming that Certificate accurately reflects insurance coverage that is available during term of the Contract. If requested in writing by City Engineer, Contractor shall furnish City Engineer with certified copies of Contractor's actual insurance policies. Failure of Contractor to provide certified copies, as requested, may be deemed, at City Engineer's or City Attorney's discretion, a material breach of the Contract.

11.3.2 Notwithstanding the proof of insurance requirements, Contractor shall continuously maintain in effect required insurance coverage set forth in Paragraph 11.2. Failure of Contractor to comply with this requirement does constitute a material breach by Contractor allowing the City, at its option, to immediately suspend or terminate work, or exercise any other remedy allowed under the Contract. Contractor agrees that the City has not waived or is not estopped to assert a material breach of the Contract because of any acts or omissions by the City regarding its review or non-review of insurance documents provided by Contractor, its agents, employees, or assigns.

11.3.3 Contractor shall provide updated certificates of insurance to the Director upon request. The Contractor shall be responsible for delivering a current certificate of insurance in the proper form to the Director as long as Contractor is required to furnish insurance coverage under Paragraph 11.2.

11.3.4 Every certificate of insurance Contractor delivers in connection with this Contract shall

.1 be less than 12 months old;

.2 include all pertinent identification information for the Insurer, including the company name and address, policy number, NAIC number or AMB number, and authorized signature;

.3 include in the Certificate Holder Box the Project name and reference numbers, contractor's email address, and indicates the name and address of the Project Manager;

.4 include the Contractor's email address in the Certificate Holder Box;

.5 include the Project reference numbers on the City address so the Project reference number is visible in the envelope window; and

.6 be appropriately marked to accurately identify all coverages and limits of the policy, effective and expiration dates, and waivers of subrogation in favor of the City for Commercial General Liability, Automobile Liability, and Worker's Compensation/Employers' Liability.

11.4 *PERFORMANCE AND PAYMENT BONDS*

11.4.1 For Contracts over the value of $25,000, Contractor shall provide Bonds on the City's standard forms covering faithful performance of the Contract and payment of obligations arising thereunder as required in the Contract pursuant to Chapter 2253 of the Government Code. The Bonds must be for 100 percent of Original Contract Price and in accordance with conditions stated on standard City Performance and Payment Bond and Statutory Payment Bond forms. Bonds may be obtained from Contractor's usual source and cost for the Bonds are included in Contract Price.

11.5 *MAINTENANCE BONDS*

11.5.1 *One-year Maintenance Bond:* Contractor shall provide Bond on standard City One-year Maintenance Bond form, providing for Contractor's correction, replacement, or restoration of any portion of the Work which is found to be not in compliance with requirements of the Contract during one-year correction period required in Paragraph 12.2. The Maintenance Bond must be for 100 percent of the Original Contract Price.

11.6 *SURETY*

11.6.1 A Bond that is given or tendered to the City pursuant to the Contract must be executed by a surety company that is authorized and admitted to write surety Bonds in the State of Texas.

11.6.2 If a Bond is given or tendered to the City pursuant to the Contract in an amount greater than 10 percent of Surety's capital and surplus, Surety shall provide certification that Surety has reinsured that portion of the risk that exceeds 10 percent of Surety's capital and surplus. The reinsurance must be with one or more reinsurers who are duly authorized, accredited, or trusted to do business in the State of Texas. The amount reinsured by reinsurer may not exceed 10 percent of reinsurer's capital and surplus. The amount of allowed capital and surplus must be based on information received from State Board of Insurance.

11.6.3 If the amount of a Bond is greater than $100,000, Surety shall:

.1 also hold certificate of authority from the United States Secretary of Treasury to qualify as surety on obligations permitted or required under federal law; or,

.2 Surety may obtain reinsurance for any liability in excess of $100,000 from reinsurer that is authorized and admitted as a reinsurer in the State of Texas and is the holder of a certificate of authority from the United States Secretary of the Treasury to qualify as surety or reinsurer on obligations permitted or required under federal law.

11.6.4 Determination of whether Surety on the Bond or the reinsurer holds a certificate of authority from the United States Secretary of the Treasury is based on information published in Federal Register covering the date on which Bond was executed.

11.6.5 Each Bond given or tendered to the City pursuant to the Contract must be on City forms with no changes made by Contractor or Surety, and must be dated, executed, and accompanied by power of attorney stating that the attorney in fact executing such the bond has requisite authority to execute such Bond. The Bonds must be dated and must be no more than 30 days old.

11.6.6 Surety shall designate in its Bond, power of attorney, or written notice to the City, an agent resident in Harris County to whom any requisite notices may be delivered and on whom service of process may be had in matters arising out of the suretyship.

11.6.7 Contractor shall furnish information to a payment bond beneficiary as required by TEX. GOV'T CODE ANN. CH. 2253.

11.7 *DELIVERY OF BONDS*

11.7.1 Contractor shall deliver required Bonds to the City within time limits stated in Notice of Intent to Award and prior to Date of Commencement of the Work.

ARTICLE 12 - UNCOVERING AND CORRECTION OF THE WORK

12.1 *UNCOVERING OF THE WORK*

12.1.1 If a portion of the Work has been covered which City Engineer has not specifically requested to observe prior to its being covered, City Engineer may request to see such work and it must be uncovered by Contractor. If such work is in accordance with the Contract, the costs of uncovering and covering such work are charged to the City by Change Order. If such work is not in accordance with the Contract, Contractor shall pay for uncovering and shall correct the nonconforming Work promptly after receipt of Notice of Noncompliance to do so.

12.2 *CORRECTION OF THE WORK*

12.2.1 Contractor shall promptly correct or remove work rejected by City Engineer or work failing to conform to requirements of the Contract, whether observed before or after Date of Substantial Completion and whether fabricated, Installed, or completed.

12.2.2 Contractor bears costs of correcting the rejected or nonconforming work including additional testing and inspections, and compensation for Design Consultant's services and expenses made necessary thereby.

12.2.3 If within one year after Date of Substantial Completion, or after date for commencement of warranties established under Paragraph 9.9.5 or by other applicable special warranty required by the Contract, whichever is later in time, any of the Work is found not to be in accordance with the requirements of the Contract, Contractor shall correct such work promptly after receipt of Notice of Noncompliance to do so.

12.2.4 One-year correction period for portions of the Work completed after Date of Substantial Completion will begin on the date of acceptance of that portion of the Work. This obligation under this Paragraph survives acceptance of the Work under the Contract and termination of the Contract.

12.2.5 The one-year correction period does not establish a duration for the Contractor's general warranty under Paragraph 3.12. The City retains the right to recover damages from the Contractor as long as may be permitted by the applicable statute of limitations.

12.2.6 If Contractor does not proceed with correction of the nonconforming work within time fixed by Notice of Noncompliance, the City may correct nonconforming work or remove nonconforming work and store salvageable Products at Contractor's expense. Contractor shall pay the costs of correction of nonconforming work and removal and storage of salvageable Products to the City. If Contractor does not pay costs of the correction or removal and storage within 10 days after written notice, the City may sell the Products at auction or at private sale. The City will account for proceeds thereof after deducting costs and damages that would have been borne by Contractor, including compensation for services of Design Consultant and necessary expenses. If the proceeds of sale do not cover costs which Contractor should have borne, Contractor shall pay the value of the deficiency to the City.

12.2.7 Contractor bears cost of correcting work originally installed by Contractor, the City, or by separate contractors and damaged by Contractor's correction or removal of Contractor's work.

12.3 *ACCEPTANCE OF NONCONFORMING WORK*

12.3.1 If City Engineer prefers to accept work which is not in accordance with requirements of the Contract, City Engineer may do so only by issuance of Change Order, instead of requiring its removal and correction. City Engineer will determine Contract Price reduction. The reduction will become effective even if final payment has been made.

ARTICLE 13 - MISCELLANEOUS PROVISIONS

13.1 *GOVERNING LAWS*

13.1.1 The Contract is subject to the laws of the State of Texas, the City Charter and Ordinances, the laws of the federal government of the United States, and all rules and regulations of any regulatory body or officer having jurisdiction.

13.1.2 Venue for any litigation relating to the Contract is Harris County, Texas.

13.2 *SUCCESSORS*

13.2.1 The Contract binds and benefits the Parties and their legal successors and permitted assigns; however, this Paragraph 13.2.1 does not alter the restrictions on assignment and disposal of assets set out in Paragraph 13.3.1. The Contract does not create any personal liability on the part of any officer or agent of the City.

13.3 *BUSINESS STRUCTURE AND ASSIGNMENTS*

13.3.1 Contractor may not assign the Contract at law or otherwise, or dispose of all or substantially all of its assets without City Engineer's prior written consent. Nothing in this Section, however, prevents the assignment of accounts receivable or the creation of a security interest as described in §9.406 of the Texas Business & Commerce Code. In the case of such an assignment, Contractor shall immediately furnish the City with proof of the assignment and the name, telephone number, and address of the assignee and a clear identification of the fees to be paid to the assignee.

13.3.2 Any series, as defined by the TEX. BUS. ORG. CODE ANN., affiliate, subsidiary, or successor to which Contractor assigns or transfers assets shall join in privity and be jointly and severally liable under this Contract.

13.4 *WRITTEN NOTICE*

13.4.1 All notices required or permitted by the Contract must be in writing and must be effected by hand delivery; registered or certified mail, return receipt requested; or facsimile with confirmation copy mailed to receiving Party. Notice is sufficient if made or addressed with proper postage to the address stated in the Agreement for each Party ("Notice Address") or faxed to the facsimile number stated in the Agreement for each Party. The notice is deemed delivered on the earlier of:

.1 the date the Notice is actually received;
.2 the third day following deposit in a United States Postal Service post office or receptacle; or
.3 the date the facsimile is sent unless the facsimile is sent after 5:00 p.m. local time of the recipient and then it is deemed received on the following day.

Any Party may change its Notice Address or facsimile number at any time by giving written notice of the change to the other Party in the manner provided for in this Paragraph at least 15 days prior to the date the change is affected.

13.5 *RIGHTS AND REMEDIES*

13.5.1 Duties and obligations imposed by the Contract and rights and remedies available thereunder are in addition to and not a limitation of duties, obligations, rights, and remedies otherwise imposed or available by law.

13.5.2 No act or failure to act by the City or Contractor is a waiver of rights or duties afforded them under the Contract, nor is the act or failure to act constitute approval of or acquiescence in a breach of the Contract. No waiver, approval or acquiescence is binding unless in writing and, in the case of the City, signed by City Engineer.

13.6 *TESTS AND INSPECTIONS*

13.6.1 Contractor shall give City Engineer, Construction Manager, and Design Consultant timely notice of the time and place where tests and inspections are to be made. Contractor shall cooperate with inspection and testing personnel to facilitate required inspections or tests.

13.6.2 The City will employ and pay for services of an independent testing laboratory to perform inspections or acceptance tests required by the Contract except:

.1 inspections or tests covered by Paragraph 13.6.3;
.2 those otherwise specifically provided in the Contract; or
.3 costs incurred in connection with tests or inspections conducted pursuant to Paragraph 12.2.2.

13.6.3 Contractor is responsible for and shall pay all costs in connection with inspection or testing required in connection with City Engineer’s acceptance of a Product to be incorporated into the Work, or of materials, mix designs, or equipment submitted for approval prior to Contractor’s purchase thereof for incorporation into the Work.

13.6.4 Neither observations by the City, Construction Manager, or Design Consultant, nor inspections, tests, or approvals by others, relieves Contractor from Contractor’s obligations to perform the Work in accordance with the Contract.

13.7 *INTEREST*

13.7.1 No interest will accrue on late payments by the City except as provided under Chapter 2251 of the Government Code.

13.8 *PARTIES IN INTEREST*

13.8.1 The Contract does not bestow any rights upon any third party, but binds and benefits the Parties only.

13.9 *ENTIRE CONTRACT*

13.9.1 The Contract merges the prior negotiations and understandings of the Parties and embodies the entire agreement of the Parties. No other agreements, assurances, conditions, covenants, express or implied, or other terms of any kind, exist between the Parties regarding the Contract.

13.10 *WRITTEN AMENDMENT*

13.10.1 Changes to the Contract that cannot be effected by Modifications, must be made by written amendment, which will not be effective until approved by City Council.

13.11 *COMPLIANCE WITH LAWS*

13.11.1 Contractor shall comply with the Americans with Disabilities Act of 1990 as amended (ADA) and Texas Architectural Barriers Act and all regulations relating to either statute.

13.11.2 Contractor shall comply with all applicable federal, state, and city laws, rules and regulations.

13.12 *SEVERABILITY*

13.12.1 If any part of the Contract is for any reason found to be unenforceable, all other parts remain enforceable to the extent permitted by law.

ARTICLE 14 - TERMINATION OR SUSPENSION OF THE CONTRACT

14.1 *TERMINATION BY THE CITY FOR CAUSE*

14.1.1 Each of the following acts or omissions of Contractor or occurrences shall constitute an "Event of Default" under the Contract:

.1 Contractor refuses or fails to supply enough properly skilled workers or proper Products;

.2 Contractor disregards laws, ordinances, rules, regulations, or orders of a public authority having jurisdiction;

.3 Contractor is guilty of material breach of any duty or obligation of Contractor under the Contract;

.4 Contractor has had any other contract with the City terminated for cause at any time subsequent to the effective date of the Contract as set out in the Agreement; or

.5 Contractor fails to utilize Ultra Low Sulfur Diesel Fuel, as required in Paragraph 3.9.1.1.

14.1.2 If an Event of Default occurs, City Engineer may, at his option and without prejudice to any other rights or remedies which the City may have, deliver a written notice to Contractor and Surety describing the Event of Default and giving the Contractor 10 days to cure the Event of Default. If after the cure period, Contractor has failed or refused to cure the Event of Default, then City Engineer may deliver a second written notice to Contractor giving notice of the termination of the Contract or of the termination of Contractor's performance under the Contract ("Notice of Termination"). If City Engineer issues a Notice of Termination, then City Engineer may, subject to any prior rights of Surety and any other rights of the City under the Contract or at law:

.1 request that Surety complete the Work; or

.2 take possession of the site and all materials, equipment, tools, and construction equipment and machinery on the site owned by Contractor; and

.3 finish the Work by whatever reasonable method City Engineer may deem expedient.

14.1.3 After Contractor's receipt of a Notice of Termination, and except as otherwise directed in writing by City Engineer, Contractor shall:

.1 stop the Work on the date and to the extent specified in the Notice of Termination;

.2 place no further orders or subcontracts for Products or services;

.3 terminate all orders and subcontracts to the extent that they relate to performance of work terminated;

.4 assign to the City, in the manner, at the times, and to the extent directed by City Engineer, all rights, title, and interest of Contractor, under the terminated supply orders and subcontracts. The City may settle or pay claims arising out of termination of the orders and subcontracts;

.5 settle all outstanding liabilities and all claims arising out of the termination of supply orders and subcontracts with approval of City Engineer;

.6 take action as may be necessary, or as City Engineer may direct, for protection and preservation of property related to the Work that is in possession of Contractor, and in which the City has or may acquire an interest; and

.7 secure the Work in a safe state before leaving the site, providing any necessary safety measures, shoring, or other devices.

14.1.4 If the City terminates the Contract or terminates Contractor's performance under the Contract for any one or more of the reasons stated in Paragraph 14.1.1, Contractor may not receive any further payment until the Work is complete, subject to Paragraph 14.1.5.

14.1.5 If the unpaid balance of Contract Price exceeds the costs of finishing the Work, including liquidated damages and other amounts due under the Contract, the balance will be paid to Contractor. If the costs of finishing the Work exceed the unpaid balance, Contractor shall, within 10 days of receipt of written notice setting out the amount of the excess costs, pay the difference to the City. The amount to be paid to Contractor or the City will be certified by City Engineer in writing, and this obligation for payment shall survive termination of the Contract or termination of Contractor's performance under the Contract. Termination of the Contractor for cause shall not relieve the Surety from its obligation to complete the project.

14.2 *TERMINATION BY THE CITY FOR CONVENIENCE*

14.2.1 City Engineer may, without cause and without prejudice to other rights or remedies of the City, give Contractor and Surety a Notice of Termination with a seven days written notice.

14.2.2 After receipt of the Notice of Termination, and except as otherwise approved by City Engineer, Contractor shall conform to requirements of Paragraph 14.1.3.

14.2.3 After receipt of the Notice of Termination, Contractor shall submit to the City its termination Claim, in forms required by City Engineer. The Claim will be submitted to the City promptly, but no later than six months from the effective date of termination, unless one or more extensions are granted by City Engineer in writing. If Contractor fails to submit its termination Claim within the time allowed, in accordance with Paragraph 14.2.4, City Engineer will determine, on the basis of available information, the amount, if any, due to Contractor because of termination, and City Engineer's determination is final and binding on the Parties. The City will then pay to Contractor the amount so determined.

14.2.4 City Engineer will determine, on the basis of information available to City Engineer, the amount due, if any, to Contractor for the termination as follows:

.1 Contract Price for all work performed in accordance with the Contract up to the date of termination determined in the manner prescribed for monthly payments in Article 9, except no retainage is withheld by the City either for payment determined by percentage of completion or for materials and equipment delivered to the site, in storage or in transit.

.2 Reasonable termination expenses, including costs for settling and paying Subcontractor and Supplier claims arising out of termination of the Work, reasonable cost of preservation and protection of the City's property after termination, if required, and the cost of Claim preparation. Termination expenses do not include field or central office overhead, salaries of employees of Contractor, or litigation costs, including attorneys' fees.

No amount is allowed for anticipated profit or central office overhead on uncompleted work, or any cost or lost profit for other business of Contractor alleged to be damaged by the termination.

14.2.5 Contractor shall promptly remove from the site any construction equipment, tools, and temporary facilities, except the temporary facilities which City Engineer may wish to purchase and retain.

14.2.6 Contractor shall cooperate with City Engineer during the transition period.

14.2.7 The City will take possession of the Work and materials delivered to the site, in storage, or in transit, as of date or dates specified in the Notice of Termination, and is responsible for maintenance, utilities, security, and insurance, as stated in Notice of Termination.

14.3 *SUSPENSION BY THE CITY FOR CONVENIENCE*

14.3.1 City Engineer may, without cause, after giving Contractor and Surety 24-hour prior written notice, order Contractor to suspend, delay, or

interrupt the Work in whole or in part for a period of time as City Engineer may determine.

14.3.2 An adjustment will be made in Contract Time equivalent to the time of suspension.

14.3.3 Adjustment will be made to Contract Price for increases in the cost of performance of the Work, including profit on increased cost of performance caused by suspension, delay, or interruption of the Work in accordance with Paragraph 7.3. No adjustment will be made to the extent that:

.1 performance was, or would have been, suspended, delayed, or interrupted by another cause for which Contractor is responsible; or

.2 adjustment is made or denied under another provision of the Contract.

14.4 *TERMINATION BY CONTRACTOR*

14.4.1 Contractor may terminate the Contract if the Work is stopped for a period of 30 days through no act or fault of Contractor, directly related to one of these events:

.1 issuance of an order of a court or other public authority having jurisdiction;

.2 act of government, such as a declaration of national emergency which makes material unavailable; or

.3 if repeated suspensions, delays, or interruptions by the City as described in Paragraph 14.3 constitute, in the aggregate, more than 100 percent of the total number of days scheduled for completion, or 120 days in any 365-day period, whichever is less;

No termination will be effective for the above reasons if Contractor delivers written notice to City Engineer describing the reason for termination, giving the proposed termination date, and granting the City a reasonable opportunity to respond and cure any City default before termination is effective.

14.4.2 If the Contract is terminated pursuant to this Paragraph 14.4, Contractor shall comply with the requirements of Paragraphs 14.2.2 through 14.2.7.

END OF DOCUMENT

Document 00800

SUPPLEMENTARY CONDITIONS

The following Paragraphs amend and supplement the November 1, 2011 edition of General Conditions. Unaltered portions of General Conditions remain in effect.

ARTICLE 3 - THE CONTRACTOR

3.5 *LABOR*: *Insert the following Paragraph 3.5.3.1.1*

3.5.3.1.1 If the original contract price is greater than $1 Million Dollars, the Contractor shall make good faith efforts to comply with the City ordinances regarding Minority Business Enterprises (MBE), Persons with Disabilities Business Enterprises (PDBE) and Small Business Enterprise (SBE) participation goals which are as follows:

.1 the MBE goal is 10 percent,

.2 the SBE goal is 8 percent, and

.3 the PDBE goal is 0 percent

ARTICLE 4 – ADMINISTRATION OF THE CONTRACT

4.3 *CLAIMS AND DISPUTES: Insert the following Paragraph 4.3.3.1:*

4.3.3.1 Contractor waives any claim if contractor fails to submit the claim within 90 days of the date of the occurrence giving rise to the claim (“90 day time limit”). Contractor shall automatically release the city from any claim not submitted before the 90 day time limit when contractor submits an application for payment after the 90 day time limit.

8.1 *PROGRESS AND COMPLETION: Add the following Paragraph 8.1.6.1.*

8.1.6.1 Contractor shall credit the City by Change Order for inspection services for overtime work or work performed on Sundays or Legal Holidays. The amount Contractor credits the City will be $50.00 per hour per inspector for inspection services.

ARTICLE 9 - PAYMENTS AND COMPLETION

9.12 *LIQUIDATED DAMAGES*: *Insert the following Paragraph 9.12.1.1.*

9.12.1.1 The amount of liquidated damages payable by Contractor or Surety for each and every day of delay beyond Contract Time, are $1,200.00 per day.

ARTICLE 11 - INSURANCE AND BONDS

11.5 *MAINTENANCE BONDS: Insert the following Paragraph 11.5.2.*

11.5.2 One-year Surface Correction Bond: Contractor shall provide, on the City standard form, an additional one year Bond in an amount equal to four percent of the Original Contract Price or cost of repair. Bond shall provide for Contractor's correction, replacement, or restoration of backfill or subsurface and surface work not in accordance with the Contract, within one year from the date the One-year Maintenance Bond has expired.

END OF DOCUMENT

Document 00805

EQUAL EMPLOYMENT OPPORTUNITY PROGRAM REQUIREMENTS
(City of Houston Information Requirements
for the Successful Bidder on All Construction Contracts)

DOCUMENTS THAT MUST BE SIGNED AND RETURNED TO THE CITY OF HOUSTON PRIOR TO FINAL EXECUTION OF CONTRACT

Certification by Bidder Regarding Equal Employment Opportunity EEO-3

Total Work Force Composition of the Company,..... EEO-6
or in lieu thereof, a copy of the latest Equal Employment Opportunity Commission's EEO-1 form (This information is required only if the Contractor has a work force of 50 or more people and the Contract is $50,000 or more.)

Company's Equal Employment Opportunity Compliance Program EEO-7

INFORMATION THAT MUST BE SUPPLIED DURING THE COURSE OF THE WORK

Certification By Proposed Subcontractor Regarding
Equal Employment Opportunity EEO-26

Certification by Proposed Material Suppliers, Lessors,and
Professional Service Providers Regarding Equal Employment Opportunity..... EEO-29

PLEASE COMPLETE PAGES EEO-3 THROUGH EEO-7 AND MAIL TO:

City of Houston
Mayor's Office of Business Opportunity
Contract Compliance Section
611 Walker, 7th Floor
Houston, Texas 77002
Attention: Director

The remainder of the reports can be mailed at the appropriate time.

EQUAL EMPLOYMENT OPPORTUNITY PROGRAM REQUIREMENTS

The following are Equal Employment Opportunity requirements to be met and documents to be submitted to:

Mayor's Office of Business Opportunity
Contract Compliance Section
611 Walker, 7th Floor
Houston, Texas 77002

Under the conditions and terms of all City construction contracts, the prime contractor is responsible for all Equal Employment Opportunity compliance, including subcontractor compliance.

EQUAL EMPLOYMENT OPPORTUNITY FORMS (EEO Forms)

These forms are submitted by the prime contractors at the beginning of the Project and as requested:

- EEO Forms 3, 6, and 7, by prime contractors

This form is submitted by all subcontractors before they begin work on the project:

- EEO Form 26 by subcontractors

This form is submitted by all suppliers, lessors, or professional services providers before they begin work on the project:

- EEO Form 29

POSTING

The following poster should be clearly displayed on each job site, or in case of annual service agreements, in the Contractor's office:

Equal Employment Opportunity is the Law Poster

JOB SITE VISITS

Site visits will be made by a Contract Compliance Officer, who will make their presence known to the Project Manager, Supervisor, or Foreman, and will conduct interviews with employees on site.

PAYMENT AND EVALUATION

Upon completion of the Project, as part of the contract-awarding department's total clearance process, the Office of Business Opportunity's Contract Compliance Section must certify to the department that all EEO compliance requirements have been met.

CERTIFICATION BY BIDDER REGARDING
EQUAL EMPLOYMENT OPPORTUNITY

GENERAL

In accordance with Executive Order 11246 (30 F.R. 12319-25), the implementing rules and regulations thereof, and orders of the Secretary of Labor, a certification regarding Equal Opportunity is required of bidders or prospective contractors and their proposed subcontractors prior to the award of contracts or subcontracts.

CERTIFICATION OF BIDDER

Bidder's Name:_____

Address:_____

Telephone Number:_____ Fax :_____

Name of the Company's EEO Officer: _____

E-mail Address:_____

Web Page/URL Address:_____

IRS Employer Identification Number:_____

Work to be performed:_____

Project No:_____

1. Participation in a previous contract or subcontract.

   a. Bidder has participated in a previous contract or subcontract subject to the Equal Opportunity Clause. ☐ YES ☐ NO

   b. Compliance reports were required to be filed in connection with such contract or subcontract. ☐ YES ☐ NO

   c. Bidder has filed all compliance reports required by Executive Orders 10925, 11114, 11246, or by regulations of the Equal Employment Opportunity Commission issued pursuant to Title VII of the Civil Rights Act of 1964. ☐ YES ☐ NO

   d. If answer of Item c. is "No", please explain in detail on reverse side of this certification.

2. Dollar amount of bid:$ _____

3. Anticipated performance period in days: _____

4. Expected total number of employees to perform the proposed construction: _____

5. Nonsegregated facilities.

   a. Notice to prospective federally-assisted construction contractors

      (1) A Certification of Nonsegregated Facilities, as required by the May 9, 1967, Order (32 F.R. 7439, May 19, 1967) on Elimination of Segregated Facilities, by the Secretary of Labor, must be submitted to the recipient prior to the award of a federally-assisted construction contract exceeding $10,000 which is not exempt from the provisions of the Equal Opportunity Clause.

      (2) Contractors receiving federally-assisted construction contract awards exceeding $10,000 which are not exempt from the provisions of the Equal Opportunity Clause will be required to provide the forwarding of the following notice to prospective subcontractors for supplies and construction contracts where the subcontracts exceed $10,000 and are not exempt from the provisions of the Equal Opportunity Clause.

      The federally-assisted construction Contractor certifies that he/she does not maintain or provide any segregated facilities at any of his/her establishments, and does not permit employees to perform their services at any location, under his/her control, where segregated facilities are maintained. The federally-assisted construction Contractor certifies further that he/she will not maintain or provide segregated facilities at any of his/her establishments, and will not permit employees to perform their services at any location, under his/her control, where segregated facilities are maintained. The federally-assisted construction Contractor agrees that a breach of this certification is a violation of the Equal Opportunity Clause in this Contract. As used in this certification, the term "segregated facilities" means any waiting rooms, work areas, restrooms and washrooms, restaurants and other eating areas, time clocks, locker rooms and other storage or dressing areas, parking lots, drinking fountains, recreation or entertainment areas, transportation, and housing facilities provided for employees which are segregated by explicit directive or are in fact segregated on the basis of race, creed, color, or national origin because of habit, local custom, or otherwise. The federally-assisted construction Contractor agrees that (except where he/she has obtained identical certifications from proposed Subcontractors for specific time periods) he/she will obtain identical certifications in duplicate from proposed Subcontractors prior to the award of subcontracts exceeding $10,000 which are not exempt from the provisions of the Equal Opportunity Clause, and that he/she will retain the duplicate of such certifications in his/her files. The Subcontractor will include the original in his/her bid package.

6. Race or ethnic group designation of bidder. Enter race or ethnic group in appropriate box:

☐ White ☐ Black ☐ Hispanic

☐ Pacific Islander, Asian ☐ American Indian, Aleut.

7. Gender of Owner ☐ Male ☐ Female

REMARKS: _____

Certification - The information above is true and complete to the best of my knowledge and belief.

_____
Company Officer (Please Type)

_____ _____
Signature Date

NOTE: The penalty for making false statements in offers is prescribed in 18 U.S.C. 1001.

Total Work Force Composition of the Company

City of Houston, Affirmative Action Requirements for All Construction Contracts

	White		Black		Hispanic		Pacific Islander/ Asian		Alaska Native/ Amer Ind.		Total Persons		Total Minority		Total Female	
	M	F	M	F	M	F	M	F	M	F	M	F	M	F	M	F
Officials and Administrators																
Professionals																
Paraprofessionals																
Technicians																
Protective Service Workers																
Sales Workers																
Office and Clerical																
Skilled Craft Workers																
Operatives (Semi-skilled)																
Laborers (Unskilled)																
Service / Maintenance Workers																
Others																
Total																

This report includes all of the company's permanent work force. For description of job categories, see Pages CC-27 through CC-29.

Check One: **[ ] Contractor** **[ ] Subcontractor** **DATE:** _____

COMPANY: _____

EQUAL EMPLOYMENT OPPORTUNITY COMPLIANCE PROGRAM FOR

_____

Name of Company

The Company's Office of Business Opportunity Program shall consist of documented good faith efforts to comply with the goals, timetables, and objectives set forth in the following Affirmative Action steps:

A. City of Houston's Specific Equal Employment Opportunity Policy and Clause as contained in City Council Ordinance No. 78-1538, passed August 9, 1978.

B. Notice of Requirement for Office of Business Opportunity to ensure Equal Employment Opportunity (Executive Order 11246).

C. Standard Federal Equal Employment Opportunity Construction Contract Specifications (Executive Order 11246).

Project: _____

_____
Company Officer (Please Type)

_____ _____
Signature Date

NOTE: The penalty for making false statements in offers is prescribed in 18 U.S.C. 1001.

SPECIAL PROVISIONS
SPECIFIC EQUAL EMPLOYMENT OPPORTUNITY POLICY

1. GENERAL

   a. Equal employment opportunity requirements not to discriminate and to take affirmative action to assure equal employment opportunity are required by Executive Order 11246, as amended. The requirements set forth in these Special Provisions shall constitute the specific affirmative action requirements for Project activities under this Contract and shall supplement the notice of requirement for affirmative action to ensure equal employment opportunity and standard federal equal employment opportunity construction contract specifications.
   b. The Contractor shall work with the City and the Federal Government in carrying out equal employment opportunity obligations and in their review of his/her activities under the Contract.
   c. The prime Contractor and all Subcontractors holding subcontracts of $10,000 or more shall comply with the following minimum specific requirement activities of equal employment opportunity. The Contractor shall include these requirements in every subcontract of $10,000 or more with such modification of language as is necessary to make them binding on the Subcontractor.

2. EQUAL EMPLOYMENT OPPORTUNITY POLICY

   The Contractor shall accept as his/her operating policy the following statement which is designed to further the provision of equal employment opportunity to all persons without regard to their race, age, color, religion, sex, or national origin, and to promote the full realization of equal employment opportunity through a positive continuing program:

   It is the policy of this Company to assure that applicants are employed, and that employees are treated during employment, without regard to their race, religion, color, sex, or national origin. Such action shall include: employment, upgrading, demotion, or transfer; recruitment or recruitment advertising; layoff or termination; rates of pay or other forms of compensation; and selection for training, including apprenticeship.

3. EQUAL EMPLOYMENT OPPORTUNITY OFFICER

   The Contractor shall designate and make known to the City contracting officers an equal employment opportunity officer (hereinafter referred to as the EEO Officer) who must be capable of effectively administering and promoting an active Contractor program of equal employment opportunity and who must be assigned adequate authority and responsibilities to do so.

4. DISSEMINATION OF POLICY

a. All members of the Contractor's staff who are authorized to hire, supervise, promote, and discharge employees, or who recommend such action, or who are substantially involved in such action, will be made fully cognizant of, and will implement the Contractor's equal employment opportunity policy and contractual responsibilities to provide equal employment opportunity in each grade and classification of employment. To ensure that the above agreement will be met, the following actions shall be taken as a minimum:

(1) Periodic meetings of supervisory and personnel office employees shall be conducted before the start of work and then not less often than once every six months, at which time the Contractor's equal employment opportunity policy and its implementation will be reviewed and explained. The meetings shall be conducted by the EEO Officer or other knowledgeable company official.

(2) All new supervisory or personnel office employees will be given a thorough indoctrination by the EEO Officer, or other knowledgeable company official, covering all major aspects of the Contractor's equal employment opportunity obligations, within 30 days following their reporting for duty with the Contractor.

(3) The EEO Officer or appropriate company official shall instruct all employees engaged in the direct recruitment of employees for the Project relative to the methods followed by the Contractor in locating and hiring minorities and females.

b. In order to make the Contractor's equal employment opportunity policy known to all employees, prospective employees, and potential sources of employees, i.e., schools, employment agencies, labor unions (where appropriate), college placement officers, etc., the Contractor shall take the following actions:

(1) Notices and posters setting forth the Contractor's equal employment opportunity policy shall be placed in areas readily accessible to employees, applicants for employment, and potential employees.

(2) The Contractor's equal employment opportunity policy and the procedures to implement such policy shall be brought to the attention of employees by means of meetings, employee handbooks, or other appropriate means.

5. RECRUITMENT

a. When advertising for employees, the Contractor shall include in all advertisements for employees the notation "An Equal Opportunity Employer". All such advertisements will be published in newspapers, or

other publications, having a large circulation among minority groups in the area from which the Project work force would normally be derived.

b. The Contractor shall, unless precluded by a valid bargaining agreement, conduct systematic and direct recruitment through public and private employee-referral sources likely to yield qualified minority-group applicants, including, but not limited to, State employment agencies, schools, colleges, minority-group organizations, and female recruitment agencies. To meet this requirement, the Contractor shall, through his/her EEO Officer, identify sources of potential minority and female employees, and establish with such identified sources procedures whereby such group applicants may be referred to the Contractor for employment consideration.

In the event the Contractor has a valid bargaining agreement providing for exclusive hiring hall referrals, he/she is expected to observe the provisions of that agreement to the extent that the system permits the Contractor's compliance with equal employment opportunity Contract provisions. (The U. S. Department of Labor has held that where implementation of such agreements has the effect of discriminating against minorities or women, or obligates the Contractor to do the same, such implementation violates Executive Order 11246 as amended).

c. The Contractor shall encourage his/her present employees to refer female or minority-group applicants for employment by posting appropriate notices or bulletins in areas accessible to all such employees. In addition, information and procedures with regard to referring such applicants will be discussed with employees.

6. PERSONNEL ACTIONS

a. Wage, working conditions, and employee benefits shall be established and administered, and personnel actions of every type, including hiring, upgrading, promotion, transfer, demotion, layoff and termination, shall be taken without regard to race, color, religion, sex, national origin, or age. The following procedures shall be followed:

(1) The Contractor shall conduct periodic inspections of Project sites to ensure that working conditions and employee facilities do not indicate discriminatory treatment of Project-site personnel.

(2) The Contractor shall periodically evaluate the spread of wages paid within each classification to determine any evidence of discriminatory wage practices.

(3) The Contractor shall periodically review selected personnel actions in depth to determine whether there is evidence of discrimination. Where evidence is found, the Contractor shall promptly take corrective action. If the review indicates that the discrimination may extend beyond the actions reviewed, such corrective action shall include all affected persons.

(4) The Contractor shall promptly investigate all complaints of alleged discrimination made in connection with his/her obligations under this Contract, shall attempt to resolve such complaints, and shall take appropriate corrective action. If the investigation indicates that the discrimination may affect persons other than the complainant, such corrective action shall include such other persons. Upon completion of each investigation, the Contractor shall inform every complainant of all avenues of appeal.

7. TRAINING AND PROMOTION

a. The Contractor shall assist in locating, qualifying, and increasing the skills of minority-group and women employees and applicants for employment.

b. Consistent with the Contractor's work force requirements and as permissible under Federal and State regulations, the Contractor shall make full use of training programs, i.e., apprenticeship and on-the-job training programs, for the geographical area of Contract performance.

c. The Contractor shall advise employees and applicants for employment of available training programs and entrance requirements for each.

d. The Contractor shall periodically review the training and promotion potential of minority-group and women employees and shall encourage eligible employees to apply for such training and promotion.

8. UNIONS

If the Contractor relies in whole or in part upon unions as a source of employees, he/she shall use his/her best efforts to obtain the cooperation of such unions to increase minority groups and women within the unions, and to effect referrals by such unions of minority and female employees. Actions by the Contractor, either directly or through a contractor's association acting as his/her agent, will include the procedures set forth below:

a. The Contractor shall use best efforts to develop, in cooperation with the unions, joint training programs aimed toward qualifying more minority-group members and women for membership in the unions and increasing the skills of minority-group employees and women so that they may qualify for higher-paying employment.

b. The Contractor shall use best efforts to incorporate an equal employment opportunity clause into all union agreements to the end that such unions will be contractually bound to refer applicants without regard to their race, color, religion, sex, national origin, or age.

c. The Contractor is to obtain information as to the referral practices and policies of the labor union, except that to the extent such information is within the exclusive possession of the labor union, and such labor union refuses to furnish such information to the Contractor, the Contractor shall so certify to the City and shall set forth what efforts have been made to obtain such information.

d. In the event the union is unable to provide the Contractor with a reasonable flow of minority and women referrals within the time limit set forth in the collective bargaining agreement, the Contractor shall, through independent recruitment efforts, fill the employment vacancies without regard to race, color, religion, age, sex, or national origin, making full efforts to obtain qualified and/or qualifiable minority group persons and women. (The U. S. Department of Labor has held that it shall be no excuse that the union with which the Contractor has a collective bargaining agreement providing for exclusive referral failed to refer minority employees.) In the event the union referral practice prevents the Contractor from meeting the obligations pursuant to Executive Order 11246, as amended, and these special provisions, such Contractor shall immediately notify the City.

9. SUBCONTRACTING

a. The Contractor shall use his/her best efforts to solicit bids from and to utilize minority-group and female subcontractors or subcontractors with meaningful minority-group and/or female representation among their employees.

b. The Contractor shall use his/her best efforts to assure Subcontractors' compliance with their equal employment opportunity obligations.

10. RECORDS AND REPORTS

a. The Contractor shall keep such records as are necessary to determine compliance with the Contractor's equal employment opportunity obligations. The records kept by the Contractor will be designed to indicate:

(1) The number of minority and non-minority group members and women employed in each work classification on the Project.

(2) The progress and efforts being made in cooperation with unions to increase employment opportunities for minorities and women (applicable only to contractors who rely in whole or in part on unions as a source of their work force).

(3) The progress and efforts being made in locating, hiring, training, qualifying, and upgrading minority and female employees.

(4) The progress and efforts being made in securing the services of female and minority subcontractors.

b. All records, including payrolls, must be retained for a period of three years following completion of the Contract work and shall be available at reasonable times and places for inspection by authorized representatives of the City and/or the appropriate federal agency.

CITY OF HOUSTON, TEXAS

EQUAL EMPLOYMENT OPPORTUNITY CLAUSE

Pursuant to City Council Ordinance No. 78-1538, passed August 9, 1978, all contracts entered into by the City of Houston involving the expenditure of $10,000 or more, shall incorporate the following Equal Employment Opportunity Clause:

1. The Contractor, Subcontractor, vendor, Supplier, or lessee shall not discriminate against any employee or applicant for employment because of race, religion, color, sex, national origin, or age. The Contractor, Subcontractor, vendor, Supplier, or lessee shall take affirmative action to ensure that applicants are employed and that employees are treated during employment without regard to their race, religion, color, sex, national origin, or age. Such action will include, but not be limited to, the following: employment; upgrading; demotion or transfer; recruitment advertising; layoff or termination; rates of pay or other forms of compensation; and selection for training, including apprenticeship. The Contractor, Subcontractor, vendor, Supplier, or lessee agrees to post in conspicuous places available to employees, and applicants for employment, notices to be provided by the City setting forth the provisions of this Equal Employment Opportunity Clause.

2. The Contractor, Subcontractor, vendor, Supplier, or lessee states that all qualified applicants will receive consideration for employment without regard to race, religion, color, sex, national origin, or age.

3. The Contractor, Subcontractor, vendor, Supplier, or lessee shall send to each labor union or representatives of workers with which it has a collective bargaining agreement or other contract or understanding, a notice to be provided by the agency contracting officer advising the said labor union or workers' representative of the Contractor's and Subcontractor's commitments under Section 202 of Executive Order No. 11246, and shall post copies of the notice in conspicuous places available to employees and applicants for employment.

4. The Contractor, Subcontractor, vendor, Supplier, or lessee will comply with all provisions of Executive Order No. 11246 and the rules, regulations, and relevant orders of the Secretary of Labor or other Federal Agency responsible for enforcement of the equal opportunity and affirmative action provisions applicable, and shall likewise furnish all information and reports required by the Mayor and/or Contractor Compliance Officers for purposes of investigation to ascertain and effect compliance with this program.

5. The Contractor, Subcontractor, vendor, Supplier, or lessee shall furnish all information and reports required by Executive Order No. 11246, and by the rules, regulations, and orders of the Secretary of Labor, or pursuant thereto, and shall permit access to all books, records, and accounts by the appropriate City and Federal officials for purposes of investigation to ascertain compliance with such rules, regulations, and orders. Compliance reports filed at such times as directed shall contain information as to the employment practice policies, program, and work force statistics of the Contractor, Subcontractor, vendor, Supplier, or lessee.

6. In the event of a Contractor's, Subcontractor's, vendor's, Supplier's, or lessee's non-compliance with the non-discrimination clause of this Contract or with any of such rules, regulations, or orders, this Contract may be canceled, terminated, or suspended in whole or in part, and the Contractor, Subcontractor, vendor, Supplier, or lessee may be declared ineligible for further City contracts in accordance with procedures provided in Executive Order No. 11246, and such other sanctions may be imposed and remedies invoked as provided in said Executive Order, or by rule, regulation, or order of the Secretary of Labor, or as may otherwise be provided by law.

7. The Contractor shall include the provisions of paragraphs 1 through 8 of this Equal Employment Opportunity Clause in every subcontract or purchase order unless exempted by rules, regulations, or orders of the Secretary of Labor issued pursuant to Section 204 of Executive Order No. 11246 of September 24, 1965 so that such provisions will be binding upon each Subcontractor or vendor. The Contractor shall take such action with respect to any subcontractor or purchase order as the contracting agency may direct as a means of enforcing such provisions, including sanctions for noncompliance; provided, however, that in the event the Contractor becomes involved in, or is threatened with litigation with a Subcontractor or vendor as a result of such direction by the contracting agency, the Contractor may request the United States to enter into such litigation to protect the interests of the United States.

8. The Contractor shall file and shall cause each of his Subcontractors, if any, to file compliance reports with the City in the form and to the extent as may be prescribed by the Mayor's Office of Business Opportunity. Compliance reports filed at such times as directed shall contain information as to the practices, policies, programs, employment policies, and employment statistics of the Contractor and each Subcontractor.

NOTICE OF REQUIREMENT FOR AFFIRMATIVE ACTION
TO ENSURE EQUAL EMPLOYMENT OPPORTUNITY
(EXECUTIVE ORDER 11246)

1. The Offeror's or Bidder's attention is called to the "Equal Opportunity Clause" and the "Standard Federal Equal Employment Opportunity Construction Contract Specifications" set forth herein.

2. The goals and timetables for minority and female participation, expressed in percentage terms for the Contractor's aggregate work force in each trade on all construction work in the covered area, are as follows:

Timetable	Goals for Minority Participation for Each Trade	Goals for Female Participation for Each Trade
	26.2% - 27.3%	6.9%

These goals are applicable to all the Contractor's construction work (whether or not it is Federal or Federally-assisted) performed in the covered area.

The Contractor's compliance with the Executive Order and the regulations in 41 CFR Part 60-4 shall be based on its implementation of the Equal Opportunity Clause, specific affirmative action obligations required by the specifications set forth in 41 CFR 60-4.3(a), and its efforts to meet the goals established for the geographical area where the Contract resulting from this solicitation is to be performed. The hours of minority and female employment and training must be substantially uniform throughout the length of the Contract, and in each trade, and the Contractor shall make a good faith effort to employ minorities and women evenly on each of its projects. The transfer of minority or female employees or trainees from Contractor to Contractor or from project to project for the sole purpose of meeting the Contractor's goals shall be a violation of the Contract, the Executive Order, and regulations in 41 CFR part 60-4. Compliance with the goals will be measured against the total work hours performed.

3. The Contractor shall provide written notification to the Director of the Office of Federal Contract Compliance Programs within 10 working days of award of any construction subcontract in excess of $10,000 at any tier for construction work under the Contract resulting from this solicitation. The notification shall list the name, address, and telephone number of the Subcontractor; employer identification number; estimated dollar amount of the subcontract; estimated starting and completion dates of the subcontract; and the geographical area in which the Contract is to be performed.

4. As used in this Notice, and in the Contract resulting from this solicitation, the "covered area" is The Houston, Texas Standard Metropolitan Statistical Area.

STANDARD FEDERAL EQUAL EMPLOYMENT OPPORTUNITY
CONSTRUCTION CONTRACT SPECIFICATIONS
(EXECUTIVE ORDER 11246)

1. As used in these specifications:

   a. "Covered area" means the geographical area described in the solicitation from which this Contract resulted;

   b. "Director" means Director, Office of Federal Contract Compliance Programs, United States Department of Labor, or any person to whom the Director delegates authority;

   c. "Employer identification number" means the Federal Social Security number used on the Employer's Quarterly Federal Tax Return, U. S. Treasury Department Form 941.

   d. "Minority" includes:

      (i) Black (all persons having origins in any of the Black African racial groups not of Hispanic origin);

      (ii) Hispanic (all persons of Mexican, Puerto Rican, Cuban, Central or South American, or other Spanish culture or origin regardless of race);

      (iii) Asian and Pacific Islander (all persons having origins in any of the original peoples of the Far East, Southeast Asia, the Indian Subcontinent, or the Pacific Islands); and

      (iv) American Indian or Alaskan Native (all persons having origins in any of the original peoples of North America and maintaining identifiable tribal affiliations through membership and participation or community identification).

2. Whenever the Contractor, or any Subcontractor at any tier, subcontracts a portion of the work involving any construction trade, it shall physically include in each subcontract in excess of $10,000 the provisions of these specifications and the Notice which contains the applicable goals for minority and female participation and which is set forth in the solicitations from which this Contract resulted.

3. If the Contractor is participating (pursuant to 41 CFR 60-4.5) in a Hometown Plan approved by the U. S. Department of Labor in the covered area either individually or through an association, its affirmative action obligations on all work in the Plan area (including goals and timetables) shall be in accordance with that Plan for

those trades which have unions participating in the Plan. Contractors must be able to demonstrate their participation in and compliance with the provisions of any such Hometown Plan. Each Contractor or Subcontractor participating in an approved Plan is individually required to comply with its obligations under the EEO clause, and to make a good faith effort to achieve each goal under the Plan in each trade in which it has employees. The overall good faith performance by other Contractors or Subcontractors toward a goal in an approved Plan does not excuse any covered Contractor's or Subcontractor's failure to take good efforts to achieve the Plan goals and timetables.

4. The Contractor shall implement the specific affirmative action standards provided in Paragraphs 7a through p of these specifications. The goals set forth in the solicitation from which this Contract resulted are expressed as percentages of the total hours of employment and training of minority and female utilization the Contractor should reasonably be able to achieve in each construction trade in which it has employees in the covered area. The Contractor is expected to make substantially uniform progress toward its goals in each craft during the period specified.

5. Neither the provisions of any collective bargaining agreement, nor the failure by a union with whom the Contractor has a collective bargaining agreement to refer either minorities or women, shall excuse the Contractor's obligations under these specifications, Executive Order 11246, or the regulations promulgated pursuant thereto.

6. In order for the non-working training hours of apprentices and trainees to be counted in meeting the goals, such apprentices and trainees must be employed by the Contractor during the training period, and the Contractor must have made a commitment to employ the apprentices and trainees at the completion of their training, subject to the availability of employment opportunities. Trainees must be trained pursuant to training programs approved by the U. S. Department of Labor.

7. The Contractor shall take specific affirmative actions to ensure equal employment opportunity. The evaluation of the Contractor's compliance with these specifications shall be based upon its effort to achieve maximum results from its actions. The Contractor shall document these efforts fully, and shall implement affirmative action steps at least as extensive as the following:

   a. Ensure and maintain a working environment free of harassment, intimidation, and coercion at all sites, and in all facilities at which Contractor's employees are assigned to work. The Contractor, where possible, shall assign two or more women to each construction project. The Contractor shall specifically ensure that all foremen, superintendents, and other on-site supervisory personnel are aware of and carry out the Contractor's obligation to maintain such a working environment, with specific attention to minority or female individuals working at such sites or in such facilities.

b. Establish and maintain a current list of minority and female recruitment sources; provide written notification to minority and female recruitment sources and to community organizations when the Contractor or its unions have employment opportunities available, and maintain a record of the organizations' responses.

c. Maintain a current file of the names, addresses, and telephone numbers of each minority and female off-the-street applicant and minority or female referral from a union, a recruitment source, or community organization and of what action was taken with respect to each such individual. If such individual was sent to the union hiring hall for referral and was not referred back to the Contractor by the union or, if referred, not employed by the Contractor, this shall be documented in the file with the reason therefor, along with whatever additional actions the Contractor may have taken.

d. Provide immediate written notification to the Director when the union or unions with which the Contractor has a collective bargaining agreement has not referred to the Contractor a minority person or woman sent by the Contractor, or when the Contractor has other information that the union referral process has impeded the Contractor's efforts to meet its obligations.

e. Develop on-the-job training opportunities and/or participate in training programs for the area which expressly include minorities and women, including upgrading programs and apprenticeship and trainee programs relevant to the Contractor's employment needs, especially those programs funded or approved by the Department of Labor. The Contractor shall provide notice of these programs to the sources compiled under 7b above.

f. Disseminate the Contractor's EEO policy by providing notice of the policy to unions and training programs and requesting their cooperation in assisting the Contractor in meeting its EEO obligations by including it in any policy manual and collective bargaining agreement; by publicizing it in the company newspaper, annual report, etc.; by specific review of the policy with all management personnel and with all minority and female employees at least once a year; and by posting the company EEO policy on bulletin boards accessible to all employees at each location where construction work is performed.

g. Review, at least annually, the company's EEO policy and affirmative action obligations under these specifications with all employees having any responsibility for hiring, assignment, layoff, termination, or other employment decisions, including specific review of these items with on-site supervisory personnel such as superintendents, general foremen, etc., prior to the initiation of construction work at any job site. A written record shall be made and maintained identifying the time and place of

these meetings, persons attending, subject matter discussed, and disposition of the subject matter.

h. Disseminate the Contractor's EEO policy externally by including it in any advertising in the news media, specifically including minority and female news media, and providing written notification to and discussing the Contractor's EEO policy with other contractors and subcontractors with whom the Contractor does or anticipates doing business.

i. Direct its recruitment efforts, both oral and written, to minority, female and community organizations, to schools with minority and female students, and to minority and female recruitment and training organizations serving the Contractor's recruitment area and employment needs. Not later than one month prior to the date for the acceptance of applications for apprenticeship or other training by any recruitment source, the Contractor shall send written notification to organizations such as the above, describing the openings, screening procedures, and tests to be used in the selection process.

j. Encourage present minority and female employees to recruit other minority persons and women and, where reasonable, provide after school, summer, and vacation employment to minority and female youth both on the site and in other areas of a Contractor's work force.

k. Validate all tests and other selection requirements where there is an obligation to do so under 41 CFR Part 60-3.

l. Conduct, at least annually, an inventory and evaluation at least of all minority and female personnel for promotional opportunities and encourage these employees to seek or to prepare, through appropriate training, etc., for such opportunities.

m. Ensure that seniority practices, job classifications, work assignments, and other personnel practices do not have a discriminatory effect by continually monitoring all personnel and employment-related activities to ensure that the EEO policy and the Contractor's obligations under these specifications are being carried out.

n. Ensure that all facilities and company activities are nonsegregated except that separate or single-user toilet and necessary changing facilities shall be provided to assure privacy between the sexes.

o. Document and maintain a record of all solicitations of offers for subcontracts from minority and female construction contractors and suppliers, including circulation of solicitations to minority and female contractor associations and other business associations.

p. Conduct a review, at least annually, of all supervisors' adherence to and performance under the Contractor's EEO policies and affirmative action obligations.

8. Contractors are encouraged to participate in voluntary associations which assist in fulfilling one or more of their affirmative action obligations (7a through p). The efforts of a contractor association, joint contractor union, contractor-community, or other similar group of which the Contractor is a member and participant, may be asserted as fulfilling any one or more of its obligations under 7a through p of these Specifications provided that the Contractor actively participates in the group, makes every effort to assure that the group has a positive impact on the employment of minorities and women in the industry, ensures that the concrete benefits of the program are reflected in the Contractor's minority and female work force participation, makes a good faith effort to meet its individual goals and timetables, and can provide access to documentation which demonstrates the effectiveness of actions taken on behalf of the Contractor. The obligation to comply, however, is the Contractor's and failure of such a group to fulfill an obligation shall not be a defense for the Contractor's noncompliance.

9. A single goal for minorities and a separate single goal for women have been established. The Contractor, however, is required to provide equal employment opportunity and to take affirmative action for all minority groups, both male and female, and all women, both minority and non-minority. Consequently, the Contractor may be in violation of the Executive Order if a particular group is employed in a substantially disparate manner (for example, even though the Contractor has achieved its goals for women generally, the Contractor may be in violation of the Executive Order if a specific minority group of women is under utilized).

10. The Contractor shall not use the goals and timetables or affirmative action standards to discriminate against any person because of race, color, religion, sex, or national origin.

11. The Contractor shall not enter into any subcontract with any person or firm debarred from Government contracts pursuant to Executive Order 11246.

12. The Contractor shall carry out such sanctions and penalties for violation of these specifications and of the Equal Opportunity Clause, including suspension, termination, and cancellation of existing subcontracts as may be imposed or ordered pursuant to Executive Order 11246, as amended, and its implementing regulations, by the Office of Federal Contract Compliance Programs. Any Contractor who fails to carry out such sanctions and penalties shall be in violation of these specifications and Executive Order 11246, as amended.

13. The Contractor, in fulfilling its obligations under these specifications, shall implement specific affirmative action steps, at least as extensive as those standards prescribed in Paragraph 7 of these specifications, so as to achieve maximum results from its efforts to ensure equal employment opportunity. If the

Contractor fails to comply with the requirements of the Executive Order, the implementing regulations, or these specifications, the Director shall proceed in accordance with 41 CFR 60-4.B.

14. The Contractor shall designate a responsible official to monitor all employment-related activity to ensure that the company EEO policy is being carried out, to submit reports relating to the provisions hereof as may be required by the Government, and to keep records. Records shall at least include for each employee the name, address, telephone number, construction trade, union affiliation, if any, employee identification number when assigned, social security number, race, sex, status (e.g., mechanic, apprentice, trainee, helper, or laborer), dates of changes in status, hours worked per week in the indicated trade, rate of pay, and locations at which the work was performed. Records shall be maintained in an easily-understandable and retrievable form; however to the degree that existing records satisfy this requirement, contractors shall not be required to maintain separate records.

15. Nothing herein provided shall be construed as a limitation upon the application of other laws which establish different standards of compliance or upon the application of requirements for the hiring of local or other area residents (e.g., those under the Public Works Employment Act of 1977 and the Community Development Block Grant Program).

DESCRIPTION OF JOB CATEGORIES

Officials, Managers, and Administrators

Occupations requiring administrative personnel who set board policies, exercise overall responsibility for the execution of these policies, or provide specialized consultation on a regional, district, area basis, or direct individual departments or special phases of a firm's operations.

Includes: Officials, executives, middle management, plant managers, department managers, superintendents, salaried foremen who are members of management, purchasing agents, buyers, bureau chiefs, directors, deputy directors, wardens, examiners, sheriffs, police and fire chiefs, and kindred workers.

Professionals

Occupations which require specialized and theoretical knowledge which is usually acquired through college or experience of such kind and amount as to provide a comparable background.

Includes: Accountants, auditors, airplane pilots and navigators, architects, artists, chemists, designers, dieticians, editors, engineers, lawyers, librarians, mathematicians, natural scientists, registered professional nurses, personnel and labor relations workers, physical scientists, teachers, social workers, doctors, psychologists, economists, systems analysts, employment and vocational rehabilitation counselors, instructors, police and fire captains and lieutenants, and kindred workers.

Paraprofessionals

Occupations in which workers perform some of the duties of a professional or technician in a supportive role, which usually requires less formal training and/or experience normally required for professional or technical status. Such positions may fall within an identified pattern of a "New Careers" concept.

Includes: Library assistants, medical aides, child support workers, police auxiliary, welfare service aides, recreation assistants, homemakers aides, home health aides, and kindred workers.

Technicians

Occupations requiring a combination of basic scientific knowledge and manual skill which can be obtained through about two (2) years of post high school education, such as is offered in many technical institutes and junior colleges, or through equivalent on-the-job training.

Includes: Computer programmers and operators, draftsmen, engineering aides, junior engineers, mathematical aides, licensed practical or vocational nurses, photographers, radio operators, scientific assistants, surveyors, technical illustrators, technicians (medical, dental, electronics, physical sciences), police and fire sergeants, and kindred workers.

Protective Service Workers

Occupations in which workers are entrusted with public safety, security, and protection from destructive forces.

Includes: Police patrol officers, fire fighters, guards, deputy sheriffs, bailiffs, correctional officers, detectives, marshals, harbor patrol officers, and kindred workers.

Sales Workers

Occupations engaging wholly or primarily in direct selling.

Includes: Advertising agents and salespersons, insurance agents and brokers, real estate agents and brokers, stock and bond salespersons, demonstrators, salespersons and sales clerks, grocery clerks, cashiers, and kindred workers.

Office and Clerical

Occupations in which workers are responsible for internal and external communications, recording and retrieval of data and/or information and other paper work required in an office predominantly non-manual, though some manual work not directly involved with altering or transporting the products is included.

Includes: Bookkeepers, cashiers, collectors (bills and accounts), messengers and office helpers, office machine operators, shipping and receiving clerks, stenographers, typists and secretaries, telegraph and telephone operators, court transcribers, hearing reporters, statistical clerks, dispatchers, license distributors, payroll clerks, and kindred workers.

Skilled Craft Workers

Occupations in which workers perform jobs which require special manual skill through on-the-job training and experience, or through apprenticeship or other formal training programs. These workers exercise considerable independent judgment and usually receive an extensive period of training.

Includes: The building trades, hourly paid foremen and leadmen who are not members of management, mechanics and repairmen, skilled machining occupations, compositors and typesetters, electricians, engravers, job setters

(metal), motion picture projectionists, pattern and model makers, stationary engineers, tailors, heavy equipment operators, carpenters, and kindred workers.

Operatives (semi-skilled)

Workers who operate machine or processing equipment or perform other factory-type duties of intermediate skill level which can be mastered in a few weeks and require only limited training.

Includes: Apprentices (auto mechanics), plumbers, bricklayers, carpenters, electricians, mechanics, building trades, metal workers, machinists, printing trades, operatives, attendants (auto service and parking), blasters, chauffeurs, deliverymen, dressmakers and seamstresses (except factory), dryers, furnacemen, heaters (metal), laundry and dry cleaning operatives, milliners, miners, motormen, oilers, greasers, etc. (except auto), painters (except construction and maintenance), photographic process workers, stationary firemen, truck and tractor drivers, weavers (textile), welders and flame cutters, and kindred workers.

Laborers (unskilled)

Workers in manual occupations which generally require no special training. These workers perform elementary duties that may be learned in a few days and require the application of little or no independent judgment.

Includes: Garage workers, car washers and greasers, gardeners (except farm) and groundskeepers, longshoremen and stevedores, lumbermen, craftsmen, and wood choppers, laborers performing lifting, digging, mixing, loading, and pulling operations, and kindred workers.

Service/Maintenance Workers

Occupations in which workers perform duties which result in or contribute to the comfort, convenience, hygiene or safety for the general public or which contribute to the upkeep and care of buildings, facilities or grounds, or public property. Workers in this group may operate machinery.

Includes: Chauffeurs, laundry and dry cleaning operatives, truck drivers, trash collectors, custodial personnel, gardeners and groundskeepers, construction laborers, attendants (hospital and other institutions), professional and personal service, counter and fountain workers, elevator operators, firemen and fire protection, guards, watchmen and doorkeepers, stewards, porters, waiters, and kindred workers.

CERTIFICATION BY PROPOSED SUBCONTRACTOR REGARDING
EQUAL EMPLOYMENT OPPORTUNITY

_____
Name of Prime Contractor

_____
Address

GENERAL

In accordance with Executive Order 11246 (30 F.R. 12319-25), the implementing rules and regulations thereof, and orders of the Secretary of Labor, a certification regarding Equal Opportunity is required of bidders or prospective contractors and their proposed subcontractors prior to the award of contracts or subcontracts.

SUBCONTRACTOR'S CERTIFICATION

Subcontractor's Name: _____

Address: _____

IRS Employer Identification Number: _____

Job Description : _____

1. Participation in a previous contract or subcontract.

   a. Subcontractor has participated in a previous contract or subcontract subject to the Equal Opportunity Clause. ____YES ____NO

   b. Compliance reports were required to be filed in connection with such contract or subcontract. ____YES ____NO

   c. Subcontractor has filed all compliance reports required by Executive Orders 10925, 11114, 11246, or by regulations of the Equal Employment Opportunity Commission issued pursuant to Title VII of the Civil Rights Act of 1964. ____YES ____NO

   d. If answer of Item c. is "No", please explain in detail on reverse side of this certification.

2. Dollar amount of proposed subcontract: $ _____

3. Anticipated performance period in days: _____

4. Expected total number of employees to perform the proposed subcontract: _____

5. Nonsegregated facilities.

   a. Notice to prospective federally-assisted construction contractors
      (1) A Certification of Nonsegregated Facilities, as required by the May 9, 1967, order (32 F.R. 7439, May 19, 1967) on Elimination of Segregated Facilities, by the Secretary of Labor, must be submitted to the Contractor prior to the award of a subcontract exceeding $10,000 which is not exempt from the provisions of the Equal Opportunity Clause.
      (2) Contractors receiving subcontract awards exceeding $10,000 which are not exempt from the provisions of the Equal Opportunity Clause will be required to provide for the forwarding of this notice to prospective subcontractors for supplies and construction contracts where the subcontracts exceed $10,000 and are not exempt from the provisions of the Equal Opportunity clause.

   b. Certification of non-segregated facilities

      The federally-assisted construction contractor certified that he/she does not maintain or provide any segregated facilities at any of his/her establishments, and does not permit employees to perform their services at any location, under his/her control, where segregated facilities are maintained. The federally-assisted construction Contractor certifies further that he/she will not maintain or provide any segregated facilities at any of his/her establishments, and will not permit employees to perform their services at any location, under his/her control, where segregated facilities are maintained. The federally-assisted construction Contractor agrees that a breach of this certification is a violation of the Equal Opportunity Clause in this Contract. As used in this certification, the term "segregated facilities" means any waiting rooms, work areas, restrooms and washrooms, restaurants, and other eating areas, time clocks, locker rooms and other storage or dressing areas, parking lots, drinking fountains, recreation or entertainment areas, transportation, and housing facilities provided for employees which are segregated by explicit directive or are in fact segregated on the basis of race, creed, color, or national origin because of habit, local custom, or otherwise. The federally-assisted construction Contractor agrees that (except where he/she has obtained identical certifications from proposed Subcontractors for specific time periods) he/she will obtain identical certifications in duplicate from proposed Subcontractors prior to the award of subcontracts exceeding $10,000 which are not exempt from the provisions of the Equal Opportunity Clause, and that he/she will retain the duplicate of such certifications in his/her files. The Contractor will include the original in his/her Bid Package.

6. Race or ethnic group designation of bidder. Enter race or ethnic group in appropriate box:

☐ White ☐ Black ☐ Hispanic

☐ Pacific Islander, Asian ☐ American Indian, Aleut.

7. Gender

☐ Male ☐ Female

REMARKS: _

Certification - The information above is true and complete to the best of my knowledge and belief.

_____
Company Officer (Please Type)

_____ _____
Signature Date

NOTE: The penalty for making false statements in offers is prescribed in 18 U.S.C. 1001.

Certification by Proposed Material Suppliers, Lessors, and Professional Service Providers Regarding Equal Employment Opportunity

Company Name: _____ $_____
(Supplier, Lessor, Professional Service Provider) (Amount of Contract)

Company Address: _____

Company Telephone Number: _____ Fax: _____

E-mail Address: _____

Web Page/URL Address: _____

Company Tax Identification Number: _____

Project No.: [*WBS/CIP/AIP/File No.*] _____

Project Name: [*Legal Project Name*] _____

In accordance with the City of Houston Ordinance 78-1538, Supplier/Lessor/Professional Service Provider represents to be an equal opportunity employer and agrees to abide by the terms of the Ordinance. This certification is required of all Suppliers/Lessors/Professional Service Providers (herein Supplier) with contracts in the amount of $10,000.00 or more.

[ ] Yes [ ] No Supplier agrees not to discriminate against any employee or applicant for employment because of race, religion, color, sex, national origin, or age.

[ ] Yes [ ] No Supplier agrees that all qualified applicants will receive consideration for employment without regard to race, religion, color, sex, national origin, or age.

[ ] Yes [ ] No Supplier will comply with all provisions of Executive Order No. 11246 and rules, regulations and applicable orders of the Department of Labor or other Federal Agency responsible for enforcement of applicable equal opportunity and affirmative action provisions and will likewise furnish all information and reports required by the Mayor or Contract Compliance Officers for the purpose of investigation to ascertain and effect compliance with the City of Houston's Office of Affirmative Action and Contract Compliance.

[ ] Yes [ ] No The Supplier shall file and cause their sub-tier contractors to file compliance reports with the City in the form and to the extent as may be prescribed by the Mayor or Contract Compliance Officers. Compliance reports filed at such times as directed shall contain information including, but not limited to, the practices, policies, programs, and employment policies.

I hereby certify that the above information is true and correct.

_____ _____
COMPANY OFFICER (Signature) DATE

_____
NAME AND TITLE (Print or type)

END OF DOCUMENT

Document 00808

CITY OF HOUSTON BIDDER REQUIREMENTS FOR MINORITY AND WOMEN-OWNED BUSINESS ENTERPRISE (MWBE), PERSONS WITH DISABILITIES BUSINESS ENTERPRISE (PDBE) AND SMALL BUSINESS ENTERPRISE (SBE) PROGRAM

CONSTRUCTION CONTRACTS

I. GENERAL

A. CITY AUTHORITIES

1. The "Monitoring Authority" for this Project is:

   Director, Mayor's Office of Business Opportunity
   City of Houston
   611 Walker Street, 7th Floor
   Houston, Texas 77002

2. The "Contracting Department" for this Project is Department of Public Works and Engineering and the address is that which is specified for the City Engineer in Document 00520 – Agreement.

3. Project Manager will be designated at the Pre-Construction Meeting.

II. REPORTS THAT MUST BE SUBMITTED DURING THE COURSE OF THE CONTRACT:

A. MWBE/PDBE/SBE MONTHLY REPORT PROCESS

1. Mail original of completed MWBE/PDBE/SBE Monthly Utilization Report to the Monitoring Authority.

2. and one copy each to the Project Manager and MWBE/PDBE/SBE Coordinator of the Contracting Department.

III. MWBE/PDBE/SBE REQUIREMENTS:

A. PURPOSE

To facilitate implementation of City of Houston, Tex. Code of Ordinances Chapter 15, Article V, 15-81 *et seq.,* City of Houston, Tex. Ordinance 95-336 (March 29, 1995), Executive Order No. 1-2 (June 14, 1995) relating to MWBE contract participation and to facilitate implementation of City of Houston, Tex. Code of Ordinances Chapter 15, Article VI, relating to PDBE contract participation, and Amended Article IX.

B. POLICY

It is the policy of the City to encourage the full participation of Minority and Women-owned Business Enterprises, Persons with Disabilities Business Enterprises and Small Business Enterprise in all phases of its procurement activities and to afford them a full and fair opportunity to compete for City contracts at all levels.

C. POLICY ELEMENTS

1. The Contractor agrees to ensure that MWBE/PDBE/SBE firms have a full and fair opportunity to participate in the performance of City contracts. In this regard the Contractor shall take all reasonable Good Faith Efforts to meet the MWBE/PDBE/SBE goals for this Contract.

2. The Contractor and any Subcontractor shall not discriminate on the basis of race, color, religion, national origin, or sex in the performance of City contracts.

3. Contractor's performance in meeting the MWBE/PDBE/SBE participation goals will be monitored during the construction phase of the Contract by the Monitoring Authority.

D. PERCENTAGE GOALS

The MWBE, PDBE and SBE goals for MWBE, PDBE and SBE participation in the Work are specified in Document 00800 – Supplementary Conditions Goals.

E. CONTRACTOR RESPONSIBILITIES

1. Under the conditions and terms of all City construction contracts, the prime contractor is responsible for all labor and MWBE compliance, including subcontractor compliance.

2. Prior to Award:

Low Bidder shall provide MWBE/PDBE/SBE documents in accordance with the requirements of Document 00495 – Post-bid Procedures.

a. Contractor shall be bound by the MWBE/PDBE/SBE Participation Plan-Document 0600A (the "Plan") submitted, unless a deviation request is approved from the Director of the Mayor's Office of Business Opportunity.

b. All MWBE/PDBE/SBE firms listed in the Plan must be certified prior to bid date. Non-certified firms may obtain priority certification if there are less than three certified firms with the same capability as the non-certified firm. It is the responsibility of the Prime Contractor to determine the ability of all Subcontractors to perform the work.

c. The Director of the Mayor's Office of Business Opportunity is authorized to suspend any Contractor who has failed to make Good Faith Efforts to meet the goals; and to suspend any firm that has failed to make Good Faith Efforts to meet all requirements necessary for participation as an MWBE/PDBE/SBE firm.

d. Contractor shall execute written contracts with all MWBE/PDBE/SBE Subcontractors and Suppliers; and shall include in all such contracts those provisions provided in Articles 3 and 5 of Document 00700 - General Conditions.

e. Contractor shall designate an MWBE/PDBE/SBE liaison officer who will administer the Contractor's MWBE/PDBE/SBE program and who shall be responsible for maintenance of records of Good Faith Efforts to subcontract with MWBE/PDBE/SBE Subcontractors and Suppliers.

3. After Award:

a. Contractor shall submit MWBE/PDBE/SBE Monthly Utilization Reports, requested in Article II above.

b. Contractor, upon approval of the Director of the Mayor's Office of Business Opportunity shall make Good Faith Efforts to replace a certified MWBE/PDBE/SBE firm that is displaced, for any reason, with another certified MWBE/PDBE/SBE firm.

c. Contractor shall conform to the Plan unless the Director of the Mayor's Office of Business Opportunity approves otherwise. Approval shall not be unreasonably withheld.

d. Contractor shall submit all disputes with MWBE Subcontractors and Suppliers to binding arbitration as set out in the Mayor's Office of Business Opportunity, MWBE, PDBE and SBE Procedures dated June 21, 2006.

F. ELIGIBILITY OF MWBE/PDBE/SBE FIRM

1. To ensure that the MWBE/PDBE/SBE program benefits only those firms that are owned and controlled by a minority person(s), a woman (women),a person(s) with a disability or a small business enterprise, the Mayor's Office of Business Opportunity will certify the eligibility of MWBE/PDBE/SBE Subcontractors/Suppliers. Contact the Mayor's Office of Business Opportunity at (713) 837-9000 for information regarding certification.

2. The Mayor's Office of Business Opportunity maintains a Certified Minority, Women and Disadvantaged Business Enterprise Directory on the City's website. This Directory also lists federally-designated Disadvantaged Business Enterprises (DBEs), Persons with Disabilities Business Enterprises (PDBEs) and Small Business Enterprises (SBEs).

   NOTE: All MWBE/PDBE/SBE firms, even if certified by another agency, must be certified by the Mayor's Office of Business Opportunity **in order to qualify for attainment of the MWBE/PDBE/SBE goals.**

G. DETERMINATION OF MWBE/PDBE/SBE PARTICIPATION

MWBE/PDBE/SBE participation shall be counted toward meeting the MWBE/PDBE/SBE goals in response to the following:

1. Only companies certified by the Mayor's Office of Business Opportunity will be counted toward the participation goal. The City provides a Directory of certified companies for use by contractors in meeting MWBE/PDBE/SBE goals. CREDIT FOR PARTICIPATION WILL BE GIVEN ONLY IN THE SPECIFIC CATEGORY OF CERTIFICATION LISTED IN THE MWBE/PDBE/SBE DIRECTORY. A SINGLE SUBCONTRACTOR CAN BE USED TO SATISFY ONLY ONE OF THE S/M/W/BE PARTICIPATION GOALS.

2. Once a firm is certified as a MWBE/PDBE/SBE, the total dollar value of the subcontract awarded to the MWBE/PDBE/SBE firm is counted toward the MWBE/PDBE/SBE participation goals (See Paragraphs III.G.5 and III.G.6 below). The percentage goal applies to the value of the contract which includes the value of any amendments or change orders. Safety and Participation goals do not count as a single goal concerning MWBE/PDBE/DBE/SBE requirements.

3. When Contractor or Subcontractor is in a joint venture with one or more MWBE/PDBE/SBE firms to satisfy those goals, the Director of the Mayor's Office of Business Opportunity shall determine the percent of participation resulting from such joint venture to be counted toward the goals.

4. Contractor may count toward its goals, those MWBE/PDBE/SBE Subcontractors/ Suppliers performing a Commercially Acceptable Function.

   a. **COMMERCIALLY ACCEPTABLE FUNCTION** means a discrete task or group of tasks, the responsibility for performance of which shall be discharged by the MWBE/PDBE/SBE firm by using its own forces or by actively supervising on-site the execution of the tasks by another entity for whose work the MWBE/PDBE/SBE firm is responsible. Without limiting the generality of the foregoing, a MWBE/PDBE/SBE will not be considered to be performing a commercially acceptable function, if it subcontracts to non-MWBE/PDBE/SBE firms or to other MWBE/PDBE/SBE firms, more than 50 percent of a contract being counted toward the applicable participation goals, unless such subcontracting in excess of 50 percent has been expressly permitted by the Director in a written waiver of this requirement. A waiver shall be granted upon demonstration that the industry standard for the type of work involved is to subcontract over 50 percent of the work.

5. A MWBE/PDBE/SBE firm cannot subcontract more than 50 percent of the work for which it is responsible to perform unless waived by the Director.

6. Contractor may count 100 percent of MWBE/PDBE/SBE Supplier's participation toward its goals and such MWBE/PDBE/SBE Supplier contracts shall not exceed 50 percent of Contract's goals.

H. CONTRACTOR COMPLIANCE

To ensure compliance with MWBE/PDBE/SBE requirements, the Monitoring Authority will monitor Contractor's efforts regarding MWBE/PDBE/SBE Subcontractors/Suppliers during the performance of this Contract. This may be accomplished through the following: job site visits, reviewing of records and reports, and interviews of randomly selected personnel.

Site visits and field audits will be made by a Contract Compliance Officer. The Compliance Officer will make his/her presence known to the office manager, supervisor, or foreman, and will conduct interviews with employees on site.

After execution of a contract or receipt of a purchase order, the contractor shall comply with the submitted MWBE/PDBE/SBE plan, unless it has received approval from the Director of the Mayor's Office of Business Opportunity for a deviation.

I. RECORDS AND REPORTS

1. Contractor shall submit an initial report outlining MWBEPDBE/SBE participation, 40 days after the Notice to Proceed date, and on or before the 15th day of each month thereafter until all MWBE/PDBE/SBE subcontracting or material supply activity is completed. Each report shall cover the preceding month's activity. Use the MWBE/PDBE/SBE management and contract compliance system form to meet this requirement.

2. Contractor shall maintain the following records for review upon request by the Monitoring Authority:

   a. Copies of executed Subcontractor agreements and purchase orders;
   b. Documentation of payments and other transactions with MWBE/PDBE/SBE Subcontractors/ Suppliers;
   c. Appropriate explanations of any changes or replacements of MWBE/PDBE/SBE Subcontractors/Suppliers;

   NOTE: All replacement MWBE/PDBE/SBE Subcontractors/Suppliers must be certified by the Mayor's Office of Business Opportunity.

   d. Any other records required by the Monitoring Authority.

3. If the goals are not being met, the monthly report shall include a narrative description of the progress being made in MWBE/PDBE/SBE participation. If sufficient MWBE/PDBE/SBE Subcontractors or Suppliers to meet the goals are being utilized, they should be identified by name and the dollar amount paid to date for work performed or materials furnished by each MWBE/PDBE/SBE during the monthly period. Reports are required when no activity has occurred in a monthly period.

4. All such records must be retained for a period of four years following completion of the Work and shall be available at reasonable times and places for inspection by authorized representatives of the City including the City Controller.

IV. PAYMENT AND EVALUATION

Upon completion of the Project, as part of the contract-awarding department's total clearance process, the Mayor's Office of Business Opportunity must certify to the department that all labor compliance requirements have been met.

The Director of the Mayor's Office of Business Opportunity will provide to the administering department a rating of Outstanding, Satisfactory, or Unsatisfactory on the matter of MWBE/PDBE/SBE Compliance.

Outstanding and Satisfactory are given when all labor compliance and MWBE/PDBE/SBE terms are met timely.

V. SANCTIONS:

A. SUSPENSION PERIOD AND WAIVER

Pursuant to Section 15-86 of the Code of Ordinances, the Director of the Mayor's Office of Business Opportunity is authorized to suspend for a period of up to, but not to exceed, five years, any Contractor who has failed to make Good Faith Efforts. The Director is also authorized to suspend any MWBE/PDBE/SBE who has failed to make Good Faith Efforts from engaging in any Contract affected by Article V, Article VI or Article IX of Chapter 15 of the Code of Ordinances for a period of up to, but not to exceed, five years.

A Contractor may be declared in default of its Contract, if it fails to achieve the MWBE/PDBE/SBE goal set out in its Contract, AND fails to meet the City's objective good faith efforts test. A Contractor who fails to make good faith efforts may be declared non-responsible and eliminated from consideration for future city contracts for a reasonable period of time (not to exceed three years).

B. GUIDELINES FOR IMPOSITION OF SANCTIONS

1. **General:**
   - **a.** No suspension shall be imposed by the Director of the Mayor' Office of Business Opportunity except upon evidence of specific conduct on the part of a MWBE/PDBE/SBE or Contractor that is inconsistent with or in direct contravention of specific applicable requirements for Good Faith Efforts.
   - **b.** Imposition and enforcement of suspensions shall be consistent with applicable state law.

2. **Severity of Sanctions:**
   - **a.** In determining the length of any suspension, the Director shall consider the following factors:
     - **(1)** Whether the failure to comply with applicable requirements involved intentional conduct or, alternatively, may be reasonably concluded to have resulted from a misunderstanding on the part of the Contractor or MWBE/PDBE/SBE of the duties imposed on them by Article V, Article VI or IX of Chapter 15 of the Code of Ordinances and these procedures;
     - **(2)** The number of specific incidences of failure by Contractor or MWBE/PDBE/SBE to comply;
     - **(3)** Whether the Contractor or MWBE/PDBE/SBE has been previously suspended;
     - **(4)** Whether the Contractor or MWBE/PDBE/SBE has failed or refused to provide the Director with any information requested

by the Director or required to be submitted to the Director pursuant to law or these procedures;

(5) Whether the Contractor or MWBE/PDBE/SBE has materially misrepresented any applicable facts in any filing or communication to the Director of the Mayor's Office of Business Opportunity; and

(6) Whether any subsequent restructuring of the subject business or other action has been undertaken to cure the deficiencies in meeting applicable requirements.

b. Suspensions may be for any length of time not to exceed five years. Suspensions in excess of one year shall be reserved for cases involving intentional or fraudulent misrepresentation or concealment of material facts, multiple acts in contravention of applicable requirements, cases where the Contractor or MWBE/PDBE/SBE has been previously suspended, or other similarly egregious conduct.

C. DELEGATION

A decision to implement a suspension may be taken after notice and an opportunity for a hearing by the Director of the Mayor's Office of Business Opportunity or by another impartial person designated by the Director of the Mayor's Office of Business Opportunity for that purpose. The Director of the Mayor's Office of Business Opportunity or other person conducting the hearing shall not have participated in the actions or investigations giving rise to the suspension hearing.

D. NOTICE

1. Prior to the imposition of any suspension, the Director of the Mayor's Office of Business Opportunity shall deliver written notice to the Contractor or MWBE/PDBE/SBE setting forth the grounds for the proposed suspension and setting a date, time, and place to appear before the hearing officer for a hearing on the matter.

2. Any notice required or permitted to be given hereunder to any Contractor or MWBE/PDBE/SBE may be given either by personal delivery or by certified United States mail, postage prepaid, return receipt requested, addressed to their most recent address as specified in the records of the Mayor's Office of Business Opportunity or in the Contract if no address is on file with the Mayor's Office of Business Opportunity

E. HEARING PROCEDURES

Proceedings before the Director of the Mayor's Office of Business Opportunity or other hearing officer shall be conducted informally, provided that each party may be represented by counsel and may present evidence and cross-examine witnesses. The burden shall be upon the City by a

preponderance of evidence. The decision shall be reduced to writing and notice provided to the Contractor or MWBE/PDBE/SBE.

F. APPEALS

Appeals authorized pursuant to Section 15-86(b) of the Code of Ordinances shall be conducted by an arbitrator who shall act as the hearing officer. Alternatively, an appeal may be taken to City Council, subject to the appellant's compliance with Rule 12 of the City Council Rules of Procedure. Appeals shall be initiated by filing a written notice of appeal with the Director of the Mayor's Office of Business Opportunity no later than 15 days following the mailing of notice of the decision of the Director of the Mayor's Office of Business Opportunity, and the appeal notice shall state whether the appeal is requested to City Council or to an arbitrator. If an arbitration appeal is requested, then the arbitrator shall be selected as provided in Section 9 of these procedures. The arbitrator's or City Council's decision, as applicable, shall be final. The Director of the Mayor's Office of Business Opportunity shall determine whether to suspend his or her order pending an appeal, taking into account the criteria set forth in Section 6(B)(2) of these procedures.

ATTACHMENT A

City of Houston

Mayor's Office of Business Opportunity

Good Faith Efforts

"Good Faith Efforts" means those efforts required to be made and demonstrated by an apparently successful bidder or propose prior to award of a contract (whether a Goal Oriented Contract or a Regulated Contract) and at the conclusion of performance of the Contract in the event it has been unsuccessful in meeting the contract MWBE goal.

A. Prior to Award - Good Faith Efforts for non-MWBEs in construction, procurement and professional services shall mean at a minimum the following:
   1. Delivery of written notice to the following:
      a. All local certified MWBEs in the directory for the month prior to the month of the bid or proposal submission date and identified as performing work or services or providing commodities for all potential subcontracting or supply categories in the Contract; and
      b. All minority and women focused associations identified in the directory for the month prior to the month of the bid or proposal submission date; and
      c. All news media focused toward minority persons and women identified in the directory for the month prior to the month of the bid or proposal submission date; and
      d. All MWBEs, which request information on the Contract.
   2. The written Notice shall contain:
      a. Adequate information about plans, specifications, and relevant terms and conditions of the contract and about the work to be subcontract or the goods to be obtained from subcontractors and suppliers;
      b. A contact person within the apparent low bidder 's or proposer's office to answer questions;
      c. Information as to the apparent low bidder's or proposer's bonding requirements, the procedure for obtaining any needed bond, and the name and telephone number of one or more acceptable surety companies to contact;
      d. The last date for receipt by the bidder or proposer of MWBE bids or price quotations;
   3. Attendance at any special pre-bid meeting called to inform MWBEs of subcontracting or supply opportunities, if set forth in the bidding or proposal documents.
   4. Division of the Contract, as recommended by the department head of

the initiating City department and in accordance with normal industry practice, into small, economically feasible segments that could be performed by MWBEs.

5. Providing an explanation for rejection to any MWBE whose bid or price quotation is rejected, unless another MWBE is accepted for the same work, as follows:
   a. Where price competitiveness is not the reason for rejection, a written rejection notice including the reason for rejection will be sent to the rejected MWBE firm;
   b. Where price competitiveness is the reason for rejection, a meeting must be held, if rejected, with the price-rejected MWBE to discuss the rejection; and
6. Providing an explanation for rejection of any MWBE to the Mayor's Office of Business Opportunity, unless another MWBE firm is accepted for the same work, including the name of he non-MWBE firm proposed to be awarded the subcontract or supply agreement, and if price competitiveness is the reason for rejection, the MWBE's price quotation and the successful non-MWBE price quotation.

B. After Award - Good Faith Efforts for MWBEs in construction, procurement and professional services shall mean at a minimum the following:
   1. Designate an MWBE liaison officer who will administer the Contractor's MWBE programs and who shall be responsible for maintenance of records of Good Faith Efforts.
   2. MWDBE/PDBE Reporting
      a. Furnishing prompt MWDBE/PDBE Utilization Reports in a timely and accurate manner through the online Contract Monitoring System or via hard copy.
      b. Respond to efforts to resolve disputes between prime and subcontractors, and genuinely attempt to resolve these issues.
      c. Clear online Contract Monitoring System discrepancies monthly.
      d. Contractor shall designate an MWBE liaison officer who will administer the Contractor's MWBE programs and who shall be responsible for maintenance of records of Good Faith Efforts.
   3. Deviation Requests - The contractor shall comply with the submitted MWBE plan, unless it has received approval from the Director of the Mayor's Office of Business Opportunity. Approval will not be unreasonably withheld. Upon approval, contractor will make a Good Faith Effort to replace a removed MWBE with another certified firm.
   4. Furnishing prompt written response to any written inquiry from the Director of any employee of the Mayor's Office of Business Opportunity regarding the MWBE's performance or information germane to the MWBE's certification;
   5. Ensuring that at all times during the performance of any contract or subcontract subject to the requirements of Chapter1 of the Code of Ordinance the MWBE firm is engaging in a commercially acceptable

function as that term is defined herein; and

6. Ensuring that no application, response to a request for information, or other factual material submitted to the Director or any employee of the Mayor's Office of Business Opportunity contains any material misrepresentation; and
7. Furnishing prompt responses to requests from the department administering the Contract, the City Attorney and the City Controller for information, books and record needed to verify compliance.
8. Attend all meetings, mediation and arbitration hearings as requested by the Director or his/her designee.

END OF DOCUMENT

Document 00820

WAGE SCALE AND PAYROLL REQUIREMENTS FOR ENGINEERING CONSTRUCTION

Wage Scale Requirements

1.01 Contractor and its Subcontractors must pay the general prevailing wage rates for building construction for each craft or type of worker or mechanic employed in the execution of any building construction or repair under the Contract in accordance with Chapter 2258 of the Texas Government Code and City of Houston, Texas Ordinance Nos. 85-2070, 2000-1114, 2001-152, 2006-91 and 2006-168, and 2009-247 all as amended from time to time. City Council has determined the prevailing wage rate in the locality in which the work is being performed, which is set forth in Exhibit "A".

1.02 This prevailing wage rate does not prohibit the payment of more than the rates stated.

1.03 In bidding, Contractor warrants and represents that it has carefully examined the classifications for each craft or type of worker needed to execute the Contract and determined that such classifications in Exhibit "A" include all necessary categories to perform the work under the Contract.

1.04 The wage scale for engineering construction is to be applied to all site work greater than 5 feet from an exterior wall of new building under construction or from an exterior wall of an existing building.

1.05 If Contractor believes that an additional classification for a particular craft or type of worker is necessary to perform work under the Contract, it must submit with its bid a request to the Contract Compliance Division of the Mayor's Office Of Business Opportunity ("OBO") to use an additional labor classification not listed in Exhibit "A" and specify the proposed new classification. OBO shall determine whether a proposed classification is already covered in Exhibit "A", and, if it is, specify which classification is appropriate. OBO's decision is conclusive. If OBO decides that a new classification is necessary, it will determine the appropriate prevailing wage rate for any resurveyed, amended, new, or additional craft or type of worker not covered by Exhibit "A". Such determination must be decided in accordance with procedures established by OBO, and in compliance with Chapter 2258 of the Texas Government Code and City of Houston, Texas Ordinance Nos. 85-2070, 2000-1114, 2001-152, 2006-91, 2006-168 and 2009-247 subject to City Council approval.

1.06 Contractor must not use any labor classification not covered by Exhibit "A" until such classification is established and approved for use by OBO.

1.07 A Contractor or Subcontractor who violates Chapter 2258 of the Texas Government Code must pay to the City, $60 per each worker employed for each calendar day or part of the day that the worker is paid less than the wage rates set forth in Exhibit "A".

1.08 The City may withhold money required to be withheld under Chapter 2258 of the Texas Government Code from the final payment to Contractor or earlier payments if City Council makes a determination that there is good cause to believe that Contractor has not complied with these provisions and Chapter 2258 of the Government Code, in which case the City may withhold the money at any time subsequent to the finding by City Council.

1.09 Contractor and Subcontractors must keep records specifying:

(1) the name and classification of each worker employed under the Contract; and

(2) the actual per diem wages paid to each worker, and the applicable hourly rate.

The records must be open at all reasonable hours for inspection by the officers and agents of the City.

1.10 The hourly cost of salary for non-exempt workers for labor in excess of 40 hours per worker per week, shall be calculated at 1.5 times the worker's base pay, plus 1.0 times fringe benefits, for the applicable craft and level.

Certified Payroll Requirements

2.01 Employees are paid weekly and payrolls are submitted weekly using the City of Houston's electronic payroll submission module, unless the prime Contractor has been instructed to do otherwise by the Office of Business Opportunity. When no work is done after a Contractor has started work, the Contractor is required to submit weekly compliance statement with no work performed. The payrolls must reflect the exact work and classification of the workers, the exact amount that they were paid. Workers must be paid the contracted amount (prevailing wage rates.) The Contractor will be penalized $60.00 a day for each employee who is underpaid per Texas Government Code 2258-023 for all contracts except Federally Funded Contract.

2.02 Payrolls submitted manually must be signed by an authorized person. Only ORIGINAL signatures are acceptable - no copied signatures. Payrolls must clearly indicate whether the worker worked inside or outside the building area.

2.03 Payrolls must be numbered and clearly marked: the first payroll as No. 1; etc. Payroll for the final week worked on the job should be marked "FINAL".

2.04 Payrolls must have "Week Ending" dates.

2.05 Payrolls must have employees' names, addresses, last four digits of the social security numbers, and job classifications. The job classifications must be the same as the classifications on the prevailing wage rate schedule.

2.06 A payroll deduction authorization form must be submitted for each employee for any deductions other than Federal and FICA taxes.

2.07 Employees must be paid overtime (time and a half) for all hours worked over 40 hours a week on both federally and City-funded contracts.

2.08 The Contractor has the responsibility to comply with all Internal Revenue Service rules and regulations. Contractors who submit certified payrolls with owner operators (truckers) must submit a signed tax liability statement from each worker acknowledging the worker's responsibility for payment of Federal Income Tax and FICA.

2.09 Companies that have computerized payroll systems must copy the back of the certified payroll, Form WH347, and submit it with the authorized official's original signature.

2.10 If the Contractor wants to use the apprentice wage rates for an employee, the apprenticeship certificates must be submitted to the Office of Business Opportunity in advance of the employee working on the project and appearing on the payroll.

2.11 A poster of the Prevailing Wage Rate Schedule should be clearly displayed on each job site, or in case of annual service agreements, in the Contractor's office.

2.12 The Contractor shall submit the "Certificate from Contractor Appointing Officer or Employee to Supervise Payment of Employees" (Exhibit "B") to the Monitoring Authority listed in Document 00495 prior to final execution of the contract.

2.13 During the course of the work, Subcontractors shall submit the "Certificate from Subcontractor Appointing Officer or Employee to Supervise Payment of Employees" (Exhibit "C") to the Monitoring Authority listed in Document 00495.

2.14 Upon completion of the Project, as part of the contract-awarding department's total clearance process, the Office of Business Opportunity's Contract Compliance Section must review whether the Wage Rate and Payroll Requirements were met and report the results to the department.

REST OF PAGE INTENTIONALLY LEFT BLANK

EXHIBIT "A"

LABOR CLASSIFICATIONS AND PREVAILING WAGE RATES
FOR
ENGINEERING CONSTRUCTION
2013

CLASSIFICATION	RATE	CLASSIFICATION	RATE
Asphalt Distributor Operator	$14.06	Milling Machine Operator - Fine Grade	$13.53
Asphalt Paving Machine Operator	$14.32	Mixer Operator	$10.33
Asphalt Raker	$12.36	Motor Grader Operator- Rough	$14.23
Asphalt. Shoveler	$11.68	Motor Grader Operator	$15.69
Broom or Sweeper Operator	$12.68	Oiler	$12.12
Bulldozer Operator	$11.81	Painter-Structures	$18.62
Carpenter- Rough	$12.49	Pavement Marking Machine Operator	$11.18
Concrete Finisher- Paving	$11.38	Pile Driverman.	$14.95
Concrete Finisher- Structures	$10.80	Pipe Layer	$12.12
Concrete Paving Curbing Machine Operator	$11.71	Reinforcing Steel Setter - Paving	$15.15
Concrete Paving Finishing Machine Operator	$13.07	Reinforcing Steel Setter - Structure	$14.39
Concrete Paving Joint Sealer Operator	$11.00	Roller Operator, Pneumatic - Self-propelled	$11.57
Concrete Paving. Saw Operator	$13.99	Roller Operator, Steel Wheel, Flat Wheel/Tamping	$11.57
Concrete Paving Spreader Operator.	$10.44	Roller Operator, Steel Wheel, Plant Mix Pavement	$11.92
Concrete Rubber . . .	$9.00	Scraper Operator	$13.47
Crane Clamshell Backhoe Derrick, Dragline, Shovel Operator	$12.71	Servicer	$13.97
Crusher and Screening Plant Operator	$11.29	Sign Installer - PGM	$8.54
Electrician * 3 Journeyman 2 Apprentice	$21.79	Slip Form Machine Operator	$11.07
Flagger	$10.33	Spreader Box Operator	$13.58
Form Builder/Setter- Structures	$12.23	Structural Steel Worker	$14.39
Form Liner- Paving and Curb	$12.34	Tractor Operator - Crawler Type	$13.68
Form Setter- Paving and Curb	$12.34	Tractor Operator- Pneumatic	$10.07
Foundation Drill Operator - Crawler Mounted	$17.43	Transit Mixer Truck Driver	$11.00
Foundation Drill Operator - Truck Mounted	$15.89	Truck Driver, Lowboy-float	$16.03
Front Loader Operator	$13.32	Truck Driver, Single-Axle - Heavy	$11.46
Laborer Common	$11.02	Truck Driver, Single-Axle - Light	$10.07
Laborer- Utility	$11.73	Truck Driver, Tandem Axle Semi-Trailer	$12.27
Manhole Builder	$9.00	Work Zone Barricade Servicer	$11.67
Mechanic	$16.96	Welders - Receive rate prescribed for craft performing operation to which welding is incidental	
* Apprentices- must be in an approved USDOL Program and cannot exceed ratios			

Engineering Prevailing Wages
Classification Definitions

Asphalt Distributor Operator
Drives distributor truck, sets spray bars and operates valves and levers to control distribution of bituminous material for highway surfacing. May oil, grease or otherwise service and make adjustments to equipment as needed. Performs other related duties.

Asphalt Paving Machine Operator
Operates paving machine that spreads and levels asphaltic concrete on highway subgrade. Controls movement of machine, raises and lowers screed, regulates width of screed. May, oil, grease, service and make adjustments to equipment as needed. Performs other related duties.

Asphalt Raker
Distributes asphaltic materials evenly over road surface by raking and brushing material to correct thickness; directs Laborers when to add or take away material to fill low spots or to reduce high spots. Performs other related duties.

Asphalt Shoveler
A general term used on construction work covering many unskilled classifications requiring work of a physical nature. A laborer works with all crews doing everything from pick and shovel work to cleaning up lumber with hammer, shoveling and placing concrete, uses air tools, cleans concrete joints and fills joints with sealing compound from bucket or with hose and nozzle from a central source, applies coating of oil to inside face of forms, may help set and strip forms, unloads and transports reinforcing steel, cures newly poured concrete, helps lower pipe into ditch for pipelayers, builds fences, works with dirt crew keeping construction layout stakes out of the way of dirt moving equipment.

Broom or Sweeper Operator
Operates a self-propelled machine to sweep and clean roadway surfaces. May oil grease, service and make adjustments to equipment as needed. Performs other related duties.

Bulldozer Operator
Operates a crawler tractor with a bulldozer mounted in front of chassis to level, distribute and push earth or other material. May operate a ripper attachment to break up rock or other hard material. May use a push block on front of tractor to push load scrapers. May oil grease, or otherwise service and make minor repairs to equipment as needed. Performs other related duties.

Carpenter, Rough
Works from plans to build, assemble, fit together, align, plum, and set in place forms for molding concrete structures. Forms may be wood, steel, aluminum, fiberglass or any other type of material. Checks form while concrete is placed. May install miscellaneous materials integral to concrete structures. May set precast concrete elements. Prepares for slipforming traffic rail and median barrier. May install permanent metal deck forms. May work with power tools Performs other related duties.

Concrete Finisher, Paving
Finishes the exposed surfaces of fresh concrete paving, median barrier and every element of concrete structures to the final grade and contour structures to the final grade and contour with the use of straight edges and steel trowels. Operates bridge deck finishing machine. Finishes concrete curbs and gutters. Finishes exposed surface of concrete after forms have been removed by patching imperfections with fresh concrete, rubbing surface with abrasive stone, and directing others in removing excess or defective concrete with power tools. Performs other related duties.

Concrete Finisher, Structures
A worker semi-skilled in concrete finishing who assists Concrete finisher by performing specific or general duties of lesser skill and keeping Concrete Finisher supplied with materials, tools, and supplies; cleaning working area an equipment; and holding materials and tools. Performs other related duties.

Concrete Paving Curbing Machine Operator
Operates self - propelled machine(s) which may or may not travel on concrete paving forms, spreading and leveling fresh concrete to grade by use of augers and screeds. May oil, grease or otherwise service and make adjustments to equipment as necessary. Performs other related duties.

Concrete Paving Finishing Machine Operator
Operates self - propelled machine(s) which may or may not travel on concrete paving forms, spreading and leveling fresh concrete to grade by use of augers and screeds. May oil, grease or otherwise service and make adjustments to equipment as necessary. Performs other related duties.

Concrete Paving Joint Sealer Operator
Cleans and seals joints requiring a hot or cold sealing compound in concrete paving, sidewalks, driveway and approach slabs. May oil, grease or make necessary repairs adjustments to equipment as needed. Performs other related duties.

Concrete Paving Saw Operator
Operates a water-cooled power saw with either or an abrasive blade to saw expansion and contraction joints in concrete paving. May also be used to saw asphaltic pavements. May oil grease or otherwise service and make necessary adjustments to equipment as needed. Performs other related duties.

Concrete Paving Spreader Operator
Operates self - propelled machine(s) which may or may not travel on concrete paving forms, spreading and leveling fresh concrete to grade by use of augers and screeds. May oil, grease or otherwise service and make adjustments to equipment as necessary. Performs other related duties.

Concrete Rubber
Finishes the exposed surface of concrete masonry after the forms have been removed by patching holes and broken corners with fresh concrete, rubbing surface with abrasive stone to remove rough spots, and removing high spots and defective concrete with hand chisel and hammer or pneumatic chisel and powered abrasive stone. Performs other related duties.

Crane, Clamshell, Backhoe, Derrick, Dragline, Shovel Operator
A worker who operates a lattice boom type crane can hoist and move materials, raise and lower heavy weights and perform other related operations. May be crawler type or rubber tired. May include placement of rock riprap, clamshell, dragline, pipe and pile driving operations. May oil, grease or otherwise service and make necessary adjustments to equipment as needed. Performs other related duties.

Crusher and Screed Plant Operator
Operates a crusher or screening plant through which rock is run to break it into crushed stone for construction or to control flow of materials not needed. May include minor repairs and may service and make necessary adjustments to equipment as needed. Performs other related duties.

Electrician *3 Journeyman 2 Apprentice
Plans and directs the layout of metal electrical conduit, installs wiring systems, switch-panels, buss bars, works on overhead distribution systems and underground distribution systems. Performs other related duties.

Flagger
A worker who directs traffic in or around a construction site. May use signs or devices to direct traffic. May help assemble, position and clean devices or equipment used to direct traffic. Must be able to effectively communicate with the public. May require certain level of training by TXDOT specifications. Performs other related duties.

Form Builder/Setter, Structures
Fits together, aligns and sets to grade metal and wooden forms for placement of concrete. Forms may be wood, steel, aluminum, fiberglass or any other type of material. Checks forms while concrete is placed. May install miscellaneous materials integral to concrete structures. May set precast concrete elements. Prepares for slipforming traffic rail and median barrier. May install permanent metal deck forms. May work with power tools. Performs other related duties.

Form Liner, Paving & Curb
Fits together, panels align and sets to grade metal and wooden forms for placement of concrete. Works with survey crew to set stringline for panels or moles. Performs other related duties.

Form Setter, Paving & Curb
Fits together, align and set to grade metal and wooden forms for placement of concrete paving and curbs. Works with survey crew to set stringline for paving, curb and gutter curb. Performs other related duties.

Foundation Drill Operator, Crawler Mounted
Operates a hole-drilling machine that is crawler mounted. May include geotechnical operations such as soils nails, rock nails, tiebacks, anchors and jet grouting. May oil, grease or otherwise service and make necessary adjustments to equipment as needed. Performs other related duties.

Foundation Drill Operator, Truck Mounted
Operates a hole drilling machine that is mounted on the rear of a rubber tired vehicle or truck. May include soils nails, rock nails, tiebacks, anchors and jet grouting. Drive truck from location to location or may have laborer who drives truck. May oil, grease or otherwise service and make necessary adjustments to equipment as needed. Performs other related duties.

Front End Loader Operator
Operates a rubber tired, skid steer or crawler type tractor with an attached scoop type bucket on front end. Machine is used to load materials from stockpiles, excavation, charging batch plants, loading and unloading trucks. May be used with attachments in lieu of the bucket. May oil, grease or otherwise service and make necessary adjustments to equipment as needed. Performs other related duties.

Laborer, Common
A general term used on construction work covering many unskilled classifications requiring work of a physical nature. A laborer works with all crews doing everything from pick and shovel work to cleaning up lumber with hammer, shoveling and placing concrete, uses air tools, cleans concrete joints and fills joints with sealing compound from bucket or with hose and nozzle from a central source, applies coating of oil to inside face of forms, may help set and strip forms, unloads and transports reinforcing steel, cures newly poured concrete, helps lower pipe into ditch for pipelayers, builds fences, works with dirt crew keeping construction layout stakes out of the way of dirt moving equipment.

Laborer, Utility
Performs a variety of manual duties, usually working in a utility capacity by working on multiple projects and tasks where demands require workmen with varied experience and ability to work without close direction. Unloads and transports reinforcing steel. May occasionally place and tie reinforcing steel. Directs common laborers in pouring concrete. Erects shoring and bracing. Assists in installation of pipe. Installs, operate and maintains dewatering systems. May assist equipment operators in positioning machines, verifying grades and signaling operators. Directs truck drivers and scraper operators to dumping positions to maintain grades as directed. Uses power tools and air tools. May work as lead man in a labor crew. His performance of a wide variety of construction jobs distinguishes him from a helper assigned to a specific craft. Installs and maintains erosion control. Is more or less a general utility construction worker. May be second step in learning a skill, and may later become a helper in a specific classification. Performs other related duties.

Manhole Builder
Constructs a means of permanent access to water and sewer lines for maintenance purposes. This work consists of laying brick or concrete slab at bottom of ditch up to an approximate grade line near the surface of the ground. Brick or block is normally laid to form a nearly circular manhole. Brick or block is laid in by eyesight and is normally to a plumb line. Chipped or culled brick can be used quite often is. No effort may be made to keep mortar off the face of the brick and joints are not pointed. May apply coating of concrete to interior and exterior surface. Performs other related duties.

Mechanic
Assembles, set up, adjusts and maintains and repairs all types of construction equipment and trucks. He may perform the duties of a welder in repair of equipment. Performs other related duties.

Milling Machine Operator, Fine Grade
Operates a power-driven milling machine that planes material of the to roadbed and discharges the material into a hauling unit or a windrow. May oil, grease or otherwise service and make necessary adjustments to equipment as needed. Performs other related duties.

Mixer Operator
Performs a variety of manual duties, usually working in a utility capacity by working on multiple projects and tasks where demands require workmen with varied experience and ability to work without close direction. Unloads and transports reinforcing steel. May occasionally place and tie reinforcing steel. Directs common laborers in pouring concrete. Erects shoring and bracing. Assists in installation of pipe. Installs, operate and maintains dewatering systems. May assist equipment operators in positioning machines, verifying grades and signaling operators. Directs truck drivers and scraper operators to dumping positions to maintain grades as directed. Uses power tools and air tools. May work as lead man in a labor crew. His performance of a wide variety of construction jobs distinguishes him from a helper assigned to a specific craft. Installs and maintains erosion control. Is more or less a general utility construction worker. May be second step in learning a skill, and may later become a helper in a specific classification. Performs other related duties.

Motor Grader Operator, Rough
Operates a motor grader. Equipment is used to grade excavation and embankment and to lay asphalt , base and other materials. May blade haul roads and do other general motor grader work, but does not perform finish grade work to close specification tolerances. This operator may be a learner in the first phase of learning the skills of motor grader work. May oil, grease or otherwise service and make necessary adjustments to equipment as needed. Performs other related duties.

Motor Grader Operator
Operates a motor grader. Equipment is used to grade excavation and embankment and to lay asphalt , base and other materials. May blade haul roads and do other general motor grader work, but does not perform finish grade work to close specification tolerances. This operator may be a learner in the first phase of learning the skills of motor grader work. May oil, grease or otherwise service and make necessary adjustments to equipment as needed. Performs other related duties.

Oiler
A learner or semi-skilled worker who under the direction of the watch engineer May oil and grease or otherwise service all engines and necessary equipment as needed. He may clean and paint engine room as needed. Performs other related duties.

Painter, Structures
Paints and stains structural steel and concrete surfaces of bridges, retaining walls, or other structures. Directs cleaning and abrasive blasting of surfaces prior to painting or staining. Performs other related duties.

Pavement Marking Machine Operator
Operates machine used in laying paint stripes or markers on all types of paving. Loads machine with appropriate materials and may walk or ride on machine. May oil, grease or otherwise service and make necessary adjustments to equipment as needed. Performs other related duties.

Piledriverman
Sets in place, aligns, plumbs directs driving of timber, concrete, steel, pipe and any other type of piling. Sets, drives and pulls steel, concrete and other types of sheet piling. Rigs pile and leads and bracing. Signals operator. Splices piles before and after driving. Directs pile cutoff. May direct jetting or drilling equipment in connection with installing piles to grade. Performs other related duties.

Pipelayer
Installs concrete, clay, steel, ductile iron, plastic, corrugated pipe and any other type of pipe for storm drainage, water lines, gas lines and sanitary sewer lines. Lays underground communication and electrical ducts. May install and set electrical ground boxes, hand holes, manholes, inlets and other structures. Caulks joints, make threaded and flanged connections. Installs valves and other accessories. Performs other related duties.

Reinforcing Steel Setter, Paving
Works from plans to lay out and install reinforcing steel within forms or in mats of concrete paving. May direct unloading of material. Determines rigging required to complete work. Gives direction to reinforcing steel worker (helper) or common or utility laborers. May install miscellaneous materials integral to concrete structure or paving. May work with power tools. Performs other related duties.

Reinforcing Steel Setter,Structure
Works from plans to lay out and install reinforcing steel within forms or in mats of concrete paving. May direct unloading of material. Determines rigging required to complete work. Gives direction to reinforcing steel worker (helper) or common or utility laborers. May install miscellaneous materials integral to concrete structure or paving. May work with power tools. Performs other related duties.

Roller Operator, Pneumatic, Self-Propelled
Operates a self-propelled machine with either steel wheels pneumatic tires, which is used to compact and smooth all bituminous materials. May oil, grease or otherwise service and make necessary adjustments to equipment as needed. Performs other related duties.

Roller Operator, Steel Wheel, Flat Wheel/Tamping
Operates a self-propelled machine with either steel wheels or pneumatic tires which is used to compact earth fills, subgrade, flexible base and all other types of materials except bituminous. May oil, grease or otherwise service and make necessary adjustments to equipment as needed. Performs other related duties.

Roller Operator, Steel Wheel, Plant Mix Pavement
Operates a self-propelled machine with either steel wheels pneumatic tires, which is used to compact and smooth all bituminous materials. May oil, grease or otherwise service and make necessary adjustments to equipment as needed. Performs other related duties.

Scraper Operator
Operates a self-contained wheeled tractor scraper both self loading or assisted by crawler tractors or other scrapers. Used to excavate and transport earth or other materials. May oil, grease or otherwise service and make necessary adjustments to equipment as needed. Performs other related duties.

Servicer
Drives a truck, which carries various fuels, oils, greases and filters. Must have knowledge of and is responsible for the correct oiling and greasing and changing of filters on equipment according to the manufacturers' specifications. Uses compressed air grease guns, wrenches and other tools. May make adjustments to clutches, brakes and other mechanical items. Keeps record of service preventive maintenance records. May have laborer assisting him. May require CDL if driving truck on public highways. Performs other related duties.

Sign Installer (PGM)
Sets forms, reinforcing steel, anchor bolts and pours concrete for Sign foundations. Fabricates and erects pipe and angle Frameworks by bolting, welding or other means prior to installation of signs that are normally prefabricated. Works from plans in location and drilling holes for proper location and alignment of signs. May direct hoisting of signs into place. Fastens signs to framework by bolting and other means. Locates and sets lighting brackets. May perform other work associated with signing projects. Supervises sign erector helper. Performs other related duties.

Slip Form Machine Operator
Cleans and seals joints requiring a hot or cold sealing compound in concrete paving, sidewalks, driveway and approach slabs. May oil, grease or make necessary repairs adjustments to equipment as needed. Performs other related duties.

Spreader Box operator
Operates spreader box by adjusting hopper and strike off blade so that the gravel, stone or other material may be spread to a specific depth on road surface during seal coat and surface treatment operations. May oil, grease or otherwise service and make necessary adjustments to equipment as needed. Performs other related duties.

Structural Steel Worker
Works from plans to lay out and install reinforcing steel within forms or in mats of concrete paving. May direct unloading of material. Determines rigging required to complete work. Gives direction to reinforcing steel worker (helper) or common or utility laborers. May install miscellaneous materials integral to concrete structure or paving. May work with power tools. Performs other related duties.

Tractor operator, Crawler Type
Operates a crawler tractor with a bulldozer mounted in front of chassis to level, distribute and push earth or other material. May operate a ripper attachment to break up rock or other hard material. May use a push block on front of tractor to push load scrapers. May oil grease, or otherwise service and make minor repairs to equipment as needed. Performs other related duties.

Tractor Operator, Pneumatic
Operates a gasoline or diesel powered agricultural tractor that tows compaction rollers, plow, disc. water tanks, scrapers and other similar operations. May use other miscellaneous attachments. May oil. Grease or otherwise service and make necessary adjustments to equipment as needed. Performs other related duties.

Traveling Mixer Operator
Drives a gasoline or diesel truck upon which is mounted a concrete mixer. Operates concrete mixer and dumps concrete on the grade, into forms or into concrete pumps or buckets. Cleans mixer drum. May require CDL license for on highway use. May service and make necessary adjustments for proper operation of equipment. Performs other related duties.

Truck driver, lowboy-Float
Drives a heavy-duty diesel powered truck to which is attached a trailer upon which heavy equipment is hauled. Driver is often required to operate heavy equipment to load or unload the lowboy. May require CDL license for on highway use. May service and make necessary adjustments for proper operation of equipment. Performs other related duties.

Truck driver, Single Axle, Heavy
Drive a light capacity truck for transporting loads of construction material. The truck is of single rear axle type, may have various kinds of beds attached, such as dump, flat bed, tank, etc. May require CDL license for driving on highway. May services and make necessary adjustments for proper operation equipment. Performs other related duties.

Truck driver, Single Axle-Light
Drive a light capacity truck for transporting loads of construction material. The truck is of single rear axle type, may have various kinds of beds attached, such as dump, flat bed, tank, etc. May require CDL license for driving on highway. May services and make necessary adjustments for proper operation equipment. Performs other related duties.

Truck Driver, Tandem Axle, Semi-Trailer
Drives a diesel-powered tractor pulling a semi trailer hauling materials. Hauls dirt, rock, aggregates or other material. May require CDL license for driving on highway. May service and make necessary adjustments for proper operation of equipment. Performs other related duties.

Work Zone Barricade Servicer
Fabricates, erects and maintains temporary traffic control devices, including arrow boards, signs, barricades, channelizing devices, barrels and all message boards. May operates a truck during traffic control operations.

WELDERS - Receives rate for craft being performed to which welding is incidental.

EXHIBIT "B"

CERTIFICATE FROM CONTRACTOR APPOINTING OFFICER OR EMPLOYEE TO SUPERVISE PAYMENT OF EMPLOYEES

Project Name _____

_____

Project WBS#: _____ Date _____

(I) (We) hereby certify that (I am) (we are) the prime Contractor for _____

_____
(specify type of job)

in connection with construction of the above-mentioned Project, and that (I) (we) have appointed _____, whose signature appears below, to supervise the payment of (my) (our) employees beginning _____, 20___; that he/she is in a position to have full knowledge of the facts set forth in the payroll documents and in the statement of compliance required by the Copeland Act and the City of Houston, which he/she is to execute with (my) (our) full authority and approval until such time as (I) (we) submit to the City of Houston a new certificate appointing some other person for the purposes hereinabove stated.

_____ Phone: _____
(Identifying Signature of Appointee)

Attest:

_____
(Name of Firm or Corporation)

By: _____ By: _____
(Signature) (Signature)

_____ _____
(Title) (Title)

NOTE: This certificate must be executed by an authorized officer of a corporation or by a member of a partnership, and shall be executed prior to and be submitted with the first payroll. Should the appointee be changed, a new certificate must accompany the first payroll for which the new appointee executes a statement of compliance required by the Copeland Act and the City of Houston.

EXHIBIT "C"

CERTIFICATE FROM SUBCONTRACTOR APPOINTING OFFICER OR EMPLOYEE TO SUPERVISE PAYMENT OF EMPLOYEES

Project Name _____

_____

Project WBS#: _____ Date _____

(I) (We) hereby certify that (I am) (we are) the prime Contractor for _____

_____
(specify type of job)

in connection with construction of the above-mentioned Project, and that (I) (we) have appointed _____, whose signature appears below, to supervise the payment of (my) (our) employees beginning _____, 20___; that he/she is in a position to have full knowledge of the facts set forth in the payroll documents and in the statement of compliance required by the Copeland Act and the City of Houston, which he/she is to execute with (my) (our) full authority and approval until such time as (I) (we) submit to the City of Houston a new certificate appointing some other person for the purposes hereinabove stated.

_____ Phone: _____
(Identifying Signature of Appointee)

Attest:

_____
(Name of Firm or Corporation)

By: _____ By: _____
(Signature) (Signature)

_____ _____
(Title) (Title)

NOTE: This certificate must be executed by an authorized officer of a corporation or by a member of a partnership, and shall be executed prior to and be submitted with the first payroll. Should the appointee be changed, a new certificate must accompany the first payroll for which the new appointee executes a statement of compliance required by the Copeland Act and the City of Houston.

END OF DOCUMENT

Document 00830

TRENCH SAFETY GEOTECHNICAL INFORMATION

1.0 DOCUMENT INCLUDES

A. Trench Safety Geotechnical Information: Geotechnical information obtained for use in design of the trench safety system is included as an attachment to this document.

2.0 RELATED DOCUMENTS

A. Section 02260 - Trench Safety Systems.

END OF DOCUMENT

GEOTEST ENGINEERING, INC.

Geotechnical Engineers & Materials Testing

5600 Bintliff Drive Houston, Texas 77036 Telephone: (713) 266-0588
Fax: (713) 266-2977

Job No. 1140183701
Trench Safety Report
October 16, 2012

Ms. Alisa Gruber, P.E.
Lockwood Andrews & Newnam, Inc.
2925 Briarpark Drive, Suite 400
Houston, Texas 77042

Reference: **Trench Safety Design Considerations**
Surface Water Transmission Program
Contract 74B
WBS No. S-000900-0111-3
Houston, Texas

Dear Ms. Gruber:

We are pleased to present our geotechnical information for trench safety for the referenced project.

For trench excavation, it is essential to maintain the stability of the sides and base and not to disturb the soil below the excavation grade. This is necessary to prevent any damage to adjacent facilities as a result of either vertical or lateral movements of the soil. In addition, a satisfactory excavation procedure must include an adequate construction dewatering system to lower and maintain the water level at least 3 feet below the lowest excavation grade or a minimum of 5 feet below prevailing level of backfill during backfilling. This will minimize the potential for softening or "boiling" of the base support soil.

Trench Excavation

Geotechnical Parameters. Based on the soil conditions revealed by the borings, geotechnical parameters were developed for the design of the 42-inch water transmission line. The geotechnical design parameters are provided in Table 1. For design, the groundwater level

should be assumed to exist at the ground surface, since these conditions may exist after a heavy rain or flooding.

Excavation Stability. It is understood that the proposed construction of water line is generally by open cut method except at the crossings of Ludington Drive at HCFCD D140-00-00 and Ludington Drive at Fondren Road, where tunneling is proposed. The open excavation may be shored, laid back to a stable slope or supported by some other equivalent means used to provide safety for workers and adjacent structures. The excavating operations should be in accordance with OSHA Standards, OSHA 2207, Subpart P, latest revision and the City of Houston requirements.

- Excavation Shallower Than 5 Feet – Excavations that are less than 5 feet (critical height) deep should be appropriately protected when any indication of hazardous ground movement is anticipated.

- Excavations Deeper Than 5 Feet - Excavations that are deeper than 5 feet should be sloped, shored, sheeted, braced or laid back to a stable slope or supported by some other equivalent means or protection such that workers are not exposed to moving ground or cave-ins. The slopes and shoring should be in accordance with the excavation safety requirements per OSHA Standards. The following items provide design criteria for excavation stability.

  (i) OSHA's Soil Type. Based on the soil conditions revealed by the borings and the design groundwater level, OSHA's soil type "C" should be used for the determination of allowable maximum slope and/or the design of a shoring system. For shoring deeper than 20 feet, an engineering evaluation is required.

  (ii) Maximum Side-slopes. Based upon the results from the field and laboratory investigations of borings GB-1 through GB-12, it is our opinion that, temporary open-trench excavations with depths greater than 5-ft and less than about 20-ft, in general, may be made with slopes of 1.5(H):1(V) where lean clays and fat clays are encountered. When there are signs of distress or if water seepage is

evident, the entire excavation must have side-slopes of 2(H):1(V). Trenches greater than 20 feet in depth must be designed by a professional engineer.

The Contractor designated "Competent Person" should review our recommendations and determine the appropriate safe slopes on the job site at the time of construction.

(iii) Excavation Support Earth Pressure. Based on the subsurface conditions indicated by this investigation and laboratory testing results, excavation support earth pressure diagrams were developed and are presented on Figures 1.1 and 1.2. These pressure diagrams can be used for the design of temporary excavation bracing. For a trench box, a lateral earth pressure resulting from an equivalent fluid with a unit weight of 94 pcf is recommended. The above value of equivalent fluid pressure is based upon an assumption that the groundwater level is near the ground surface, since these conditions may exist after a heavy rain or flooding. Effect of surcharge loads at the ground surface should be added to the computed lateral earth pressures. A surcharge load, q, will typically result in a lateral load equal to 0.5 q. The example calculations of bracing pressures are presented in Appendix D.

(iv) Excavation Bottom Stability. In braced cuts, if tight sheeting is terminated at the base of the cut, the bottom of the excavation can become unstable under a certain conditions. This condition is governed by the shear strength of the soils and by the differential hydrostatic head between the groundwater level within the retained soils and the groundwater level at the interior of the trench excavation. For cuts in cohesive soils as predominately encountered in all of the borings (Sandy Lean Clay, Lean Clay and Fat Clay), for excavation depths of 13 to 38 feet, stability of the bottom can be evaluated in accordance with the procedure outlined on Figure 2. However due to cohesionless soils (Silty Sand and Clayey Silt w/sand) encountered within one bore diameter below the invert of the

proposed 42-inch water line at borings GB-4 and GB-5, the excavation should be done after dewatering to avoid bottom stability problems.

Excavation Dewatering

Excavations for the proposed 42-inch diameter water transmission line may encounter groundwater seepage to varying degrees depending upon the groundwater conditions at the time of construction and the location and depth of the trench or excavation.

Based on the soil conditions identified in the borings for the proposed 42-inch water transmission line, most of the excavations, based on excavation depths of 13 to 38 feet, will be in cohesive soils. However, at locations near the borings GB-4 and GB-5, cohesionless soils (silty sand and clayey silt w/sand encountered between the depths of 38 and 40 feet) are anticipated within one bore diameter below the invert of the proposed 42-inch water line.

In cohesive soil, groundwater may be managed by collection in trench bottom sumps for pumped disposal.

In cohesionless soil, dewatering such as deep wells with submersible pumps will be required to lower the groundwater level to at least 5 feet below the level of excavation. The deep wells should be pumping well ahead of the time excavation starts so that a steady state condition (at least 5 feet below the proposed excavation bottom) is achieved.

It is recommended that the actual groundwater conditions be verified at the time of construction and that the groundwater control be performed in general accordance with the City of Houston Standard Specifications, Section 01578.

We appreciate this opportunity to be of service to you. If you have any questions regarding the report, or if we can be of further service to you, please call us.

Sincerely,
GEOTEST ENGINEERING, INC.
TBPE Registration No. F-410

B.C.

Mohan C. Ballagere, P.E.
Vice President



MB\ego
Copies Submitted: (2)
Enclosures: Trench Support Earth Pressure – Figures 1.1 and 1.2
Stability of Bottom for Braced Cut – Figure 2
Geotechnical Design Parameter Summary: Open-cut Excavation – Table 1
PC38\GEOTECHNICAL\40183701-TS.DOC

Job No. 1140183701

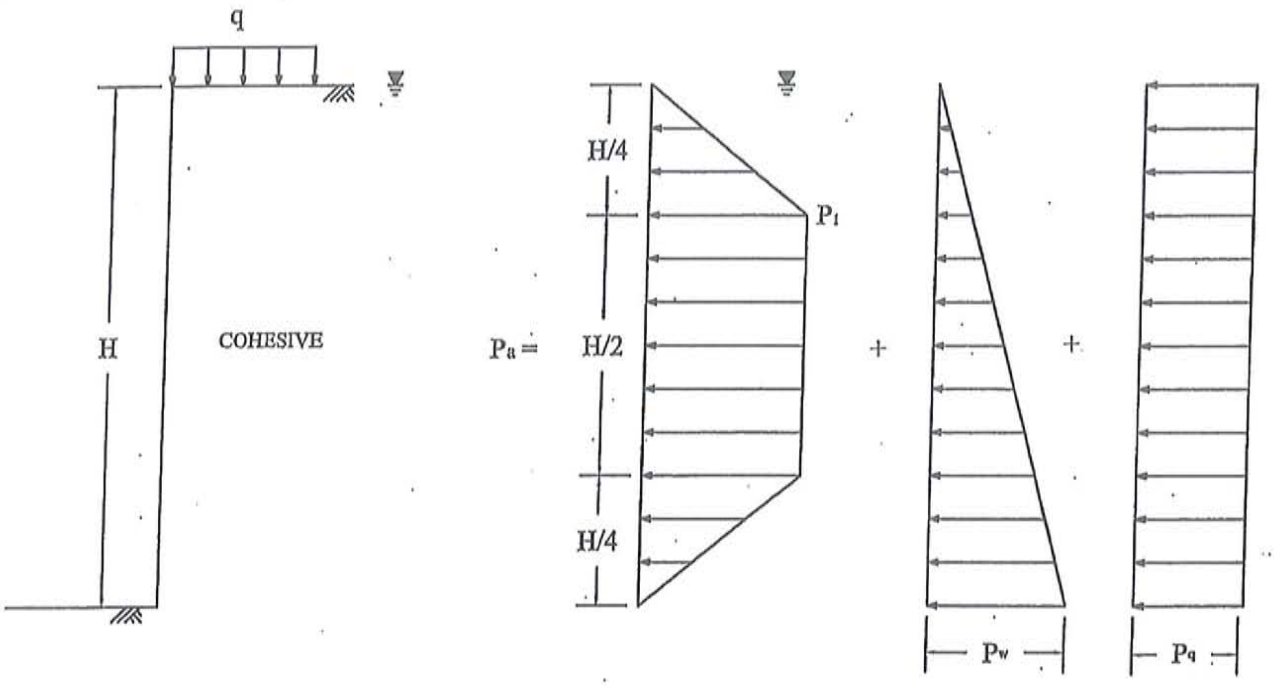

TYPICAL SOIL PARAMETERS

BRACED WALL

See Table 1 for typical values of soil parameters

For $\gamma H/c \leq 4$

$P_1 = 0.3\ \gamma_c' H$
$P_w = \gamma_w H = 62.4\ H$
$P_q = 0.5\ q$

Where:

γ_c' = Submerged unit weight of cohesive soil, pcf;
γ_w = Unit weight of water, pcf;
q = Surcharge load at surface, psf;
P_a = Lateral pressure, psf;
P_1 = Active earth pressure, psf;
P_q = Horizontal pressure due to surcharge, psf;
P_w = Hydrostatic pressure due to groundwater, psf;
H = Depth of braced excavation, feet
c = Shear strength of cohesion soil, psf;

EXCAVATION SUPPORT EARTH PRESSURE

SUBMERGED COHESIVE SOIL

Job No. 1140183701

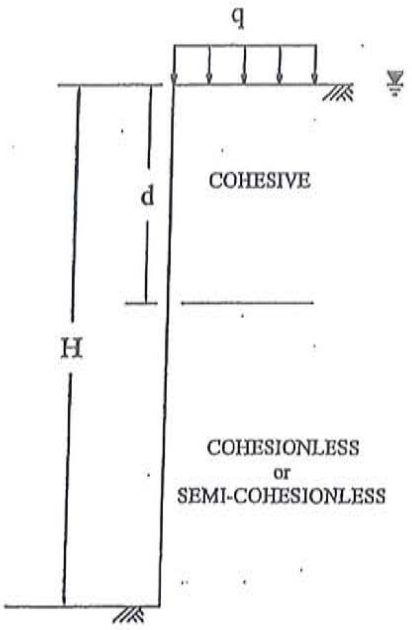

TYPICAL SOIL PARAMETERS

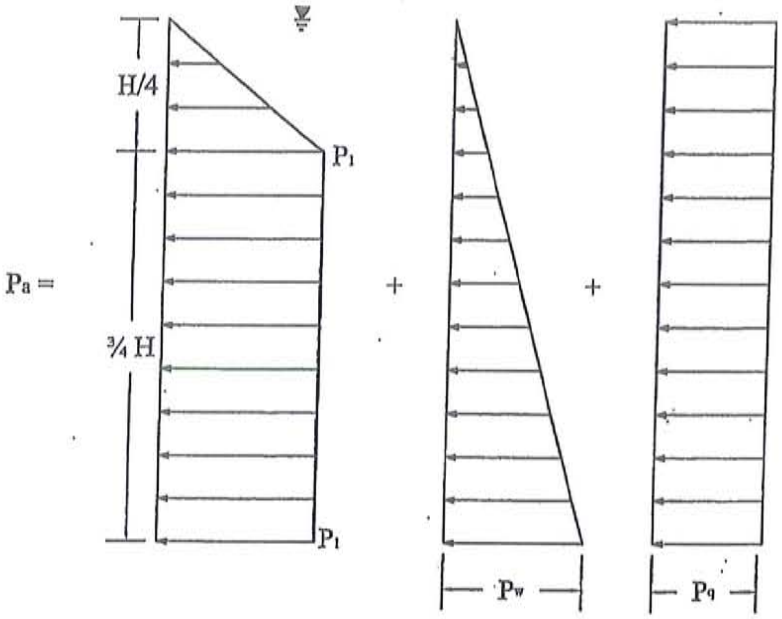

BRACED WALL

See Table 1 for typical values of soil parameters

$$\gamma'_{avg} = \frac{\gamma_c' \, d + \gamma_s' \, (H-d)}{H}$$

$P_1 = 0.3 \, \gamma'_{avg} \, H$
$P_w = 62.4 \, H$
$P_q = 0.5 \, q$

Where:

γ_c' = Submerged unit weight of cohesive soil, pcf;
γ_s' = Submerged unit weight of cohesionless soil, pcf;
γ'_{avg} = Average submerged unit weight of soils, pcf;
q = Surcharge load at surface, psf;
P_a = Lateral pressure, psf;
P_1 = Active earth pressure, psf;
P_q = Horizontal pressure due to surcharge, psf;
P_w = Hydrostatic pressure due to groundwater, psf;
H = Depth of braced excavation, feet

EXCAVATION SUPPORT EARTH PRESSURE

SUBMERGED COHESIVE SOIL OVER
COHESIONLESS OR SEMI-COHESIONLESS SOIL

Job No. 1140183701

CUT IN COHESIVE SOIL,
DEPTH OF COHESIVE SOIL UNLIMITED ($T > 0.7\ B_d$)
L = LENGTH OF CUT

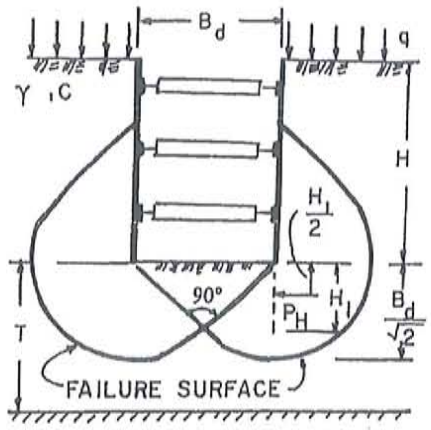

If sheeting terminates at base of cut:

$$\text{Safety factor, } F_S = \frac{N_C C}{\gamma H + q}$$

N_C = Bearing capacity factor, which depends on dimensions of the excavation : B_d, L and H (use N_C from graph below)

C = Undrained shear strength of clay in failure zone beneath and surrounding base of cut

γ = Wet unit weight of soil (see Table 1)

q = Surface surcharge (assumed q = 500 psf)

If safety factor is less than 1.5, sheeting or soldier piles must be carried below the base of cut to insure stability - (see note)

H_1 = Buried length = $\frac{B_d}{2} \geq 5$ feet

Note : If soldier piles are used, the center to center spacing should not exceed 3 times the width or diameter of soldier pile .

Force on buried length, P_H:

If $H_1 > \frac{2}{3}\frac{B_d}{\sqrt{2}}$, $P_H = 0.7\ (\gamma\ HB_d - 1.4CH - \pi CB_d)$ in lbs/ linear foot

If $H_1 < \frac{2}{3}\frac{B_d}{\sqrt{2}}$, $P_H = 1.5H_1\ (\gamma\ H - \frac{1.4CH}{B_d} - \pi C)$ in lbs/ linear foot

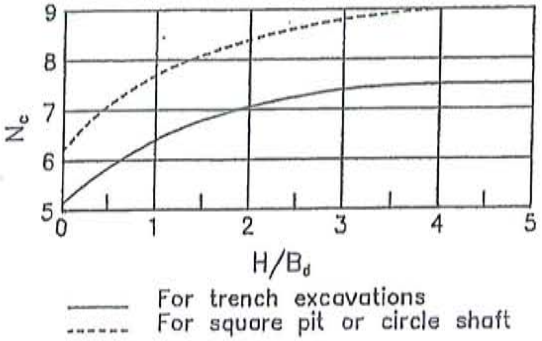

STABILITY OF BOTTOM
FOR
BRACED CUT

TABLE 1

GEOTECHNICAL DESIGN PARAMETER SUMMARY
OPEN-CUT EXCAVATION

Alignment	Boring Nos.	Stratigraphic Unit	Range of Depths, ft	Wet Unit Weight, γ, pcf	Submerged Unit Weight, γ', pcf	Undrained Cohesion, psf	Internal Friction Angle, ϕ, degree
Sandpiper Drive	GB-1 thru GB-3	Cohesive	0-8	118	59	1,000	--
			8-14	120	60	1,300	--
			14-16	128	64	900	--
			16-18	128	64	1,000	--
			18-25	126	63	2,000	--
Ludington Drive	GB-4 and GB-5	Cohesive	0-8	120	60	2,500	--
			8-22	127	64	2,000	--
			22-38	130	65	1,500	--
		Cohesionless	38-40	117	55	--	30
		Cohesive	40-50	129	65	2,000	--
	GB-6 and GB-7	Cohesive	0-16	126	63	1,500	--
			16-26	130	65	2,000	--
	GB-8 and GB-9	Cohesive	0-16	125	63	1,300	--
			16-18	120	60	3,000	--
			18-25	116	58	3,500	--
Pembridge Drive	GB-10	Cohesive	0-18	126	63	2,000	--
			18-25	114	57	3,000	--
W. Bellfort Avenue	GB-11 and GB-12	Cohesive	0-10	120	60	1,300	--
			10-12	126	63	1,000	--
			12-16	126	63	1,300	--
			16-23	124	62	2,000	--
			23-25	122	61	1,300	--

Notes:

1. Cohesive soils include Fat Clay, Fat Clay w/sand, Lean Clay w/sand and Sandy Lean Clay.
2. Cohesionless soils include silty sand and silt w/sand.

Document 00840
City of Houston
Pay or Play Program
Requirements

I. Pay or Play Program Elements

A. Purpose

Authorized by Ordinance 2007-534 and Executive Order 1-7 as amended, the purpose of the Pay or Play Program is (1) to create a more level playing field among competing contractors so that those who provide health benefits to their employees are not disadvantaged in the bidding process; and 2) to recognize and account for the fact that there are costs associated with the health care of the uninsured.

B. Program Elements

1. Covered contracts: Contracts covered by the program are those that are advertised after July 1, 2007 or which is executed on or after the effective date of this Executive Order, which are valued at or above $100,000 including contingencies, amendments, supplemental terms and/or change orders and are not primarily for the procurement of property, goods, supplies or equipment.

2. Covered employees: This program applies to employees of a covered contractor or subcontractor, including contract labor, who are over age 18, work at least 30 hours per week and work any amount of time under a covered city contract or subcontract.

3. Compliance with the program means that the contractor either:
   - "Pays" by contributing $1.00 per covered employee per regular hour for work performed under the contract with the City; or
   - "Plays" by providing health benefits to covered employees. Health benefits must meet or exceed the following standards:
   - The **employer will contribute no less than $150 per covered employee per month** toward the total premium cost.
   - The **employee contribution, if any amount, will be no greater than 50% of the total monthly premium cost and no more than $150 per month.**
   - A contractor is deemed to have complied with section 5.4 of E.O. 1-7 with respect to a covered employee who is not provided health benefits if the employee refuses the benefits and the employee's contribution to the premium is no more than $40 per month.

4. Subcontracts: The prime contractor is responsible for ensuring

compliance on behalf of covered employees, including contract labor, of subcontractors with subcontracts valued at or greater than $200,000, if the subcontract is not primarily for the procurement of property, goods, supplies or equipment. Subcontractor compliance includes submission of applicable reports and/or payments to the prime for onward submission to City of Houston, as well as maintenance of records.

5. Exemptions/Waivers: The City of Houston will award a contract to a contractor that neither Pays nor Plays only if the contractor has received an approved waiver (Form POP-4 only City departments can request).

6. Administration: Contractor performance in meeting Pay or Play program requirements will be managed by the contracting department. The Office of Business Opportunity (OBO) has administrative oversight of the program, including audit responsibilities (department compliance). Questions about the program should be referred to the Department POP Liaison an updated contact list is available on http://www.houstontx.gov/obo/popforms.html or call Gracie Orr with the Office of Business Opportunity at 832-393-0633.

II. Documentation and Reporting Requirements

A. Document that must be signed and returned to administering department with the bid/proposal.

1. City of Houston Pay or Play Program Acknowledgment Form (Form POP-1) acknowledges bidder/proposers' knowledge of the program and its requirements, and the intention to comply.

B. Documents that must be signed and returned to administering department within a period designated by the department's Contract Administrator, upon notification of low bidder or successful proposer status:

1. Certification of Compliance with Pay or Play Program (Form POP-2)
Note - Contractors that opt to "play" must provide proof of coverage, including document from insurance provider, and names of covered employees.

2. List of Subcontractors (Form POP-3)

C. The contractor will comply with the following reporting requirements:

1. Contractors that opt to Play
Provide periodic reports to the contract administrator showing proof of coverage reporting schedule will be determined by administering department based on length of contract. (Form POP-7)

2. Contractors that opt to Pay
   Provide monthly reports to administering department, detailing names of employees, hours worked, exemptions (if any) and amount owed. (Form POP-5)

3. Employee Waiver Request
   Contractor may request POP program waiver by submitting the request on POP-8 if the employee is less than 18 years old, employee has other health coverage such as through spouse or parents, Medicare/Medicaid.

Contractors shall submit an initial report with the second invoice to the department. Payments based on monthly reports are due to the contracting department with submission of the following month's invoice. Payments may be made via wire transfer, provided that proof of transaction is submitted to administering department.

III. Compliance and Enforcement

The Office of Business Opportunity will audit program compliance. Contractors willfully violating or misrepresenting POP program compliance will be subject to corrective and/or punitive action, including but not limited to the assessment of fines and penalties and/or debarment. The Pay or Play Program Requirements Form and all other POP Forms are available for downloading from the City of Houston's Website at http://www.houstontx.gov/obo/popforms.html

Document 00931

REQUEST FOR INFORMATION

1. PROJECT No.: S-00900-0111-4
2. RFI No.: _____
3. PROJECT NAME: Proposed 42-inch Water Line Along Sandpiper Dr., Ludington Dr., Pembridge Dr. and W. Bellfort, From W. Airport to Braes Forest
4. CONTRACTOR: _____
5. CONTRACT No.: _____
6. SPECIFICATION Nos.: _____
7. DRAWING Nos.: _____
8. RESPONSE CODE: [_] CRITICAL [_] ROUTINE 9.DATE RESPONSE REQUIRED: _____
10. INFORMATION REQUIRED:

11. _____ _____
CONTRACTOR (Signature) TITLE DATE

12. RESPONSE:

13. _____ _____
PROJECT MANAGER (Signature) DATE

14. If Contractor believes the response given in Item 12 requires an adjustment in Contract Price or Contract Time, Contractor shall submit a timely proposal so as not to delay Contractor's Work in accordance with General Conditions, Article 7 - Changes in the Work.

END OF DOCUMENT

Section 01110
SUMMARY OF WORK

PART 1 G E N E R A L

1.01 SECTION INCLUDES

A. Summary of the Work including Work by the City, City-furnished Products, Work sequence, future Work, Contractor use of Premises.

1.02 PROJECT DESCRIPTION

A. Surface Water Transmission Program (SWTP) consists of major improvements to transmission system to convert from primarily groundwater to surface water in order to comply with the Harris-Galveston Coastal Subsidence District's (HGCSD) regulatory plan. Program includes transmission and distribution of surface water and associated consolidation of groundwater plants in the City.

B. The project is a combination of water line construction, public utility adjustments and paving which initiates at West Airport Blvd and Sandpiper Dr., extends along Sandpiper Dr., Ludington Dr., Pembridge Dr., and West Bellfort St, ending at Braes Forest Dr.

1.03 WORK COVERED BY CONTRACT DOCUMENTS

This work will include, but not be limited to, the following:

A. Construction of approximately 9,250 linear feet of 42-inch water line by a combination of open cut and tunneling, valves, connections and appurtenances along the proposed alignment from West Airport Blvd to Braes Forest Dr.

B. Construction of approximately 2,474 linear feet of 12-inch water line, valves, connections and appurtenances along Ludington Dr. from approximate Sta. 28+40 to 53+70. Method of installation for proposed 12-inch water line will be trenchless construction with bore pits at locations to minimize residential impacts. Existing 12-inch AC water line parallel to proposed 12-inch water line to be abandon in place.

C. Removal and relocation of approximately 410 linear feet of 24-inch storm sewer pipe impacted by the installation of the 42-inch water line between Sta. 57+63 to 61+74.

D. Removal and replacement of storm sewer pipe and sanitary sewer pipe impacted by the installation of the 42-inch water line.

E. Removal and replacement of concrete pavement along water line alignment. Limits of removal and replacement of concrete pavement vary in width from one lane to two lanes of concrete as depicted by the limits of saw cut shown in drawings.

F. Provide temporary asphalt pavement in areas that will be re-disturbed at a later date such as wet connections, temporary restoration if work is delayed or stopped more than 5 consecutive calendar days. No separate pay item.

G. Repair or replacement of existing PVC drain lines encountered or disturbed by work. No separate pay item.

H. Protection of concrete sidewalks during construction. It is responsibility of the contractor to preserve the condition of existing sidewalks. No separate pay.

1.04 DEFINITION

A. Large Diameter Water Lines: Water Lines 24-inches in diameter and larger. References to large diameter water lines shall apply to pipe, valves and appurtenances 24-inch and larger.

B. Small Diameter Water Lines: Water Lines 20-inches in diameter and smaller. Unless otherwise noted in the Contract Documents, requirements pertaining to large diameter water lines do not apply to pipe, valves and appurtenances 20-inches in diameter and smaller.

1.05 CASH ALLOWANCES

A. Include the following specific Cash Allowances in the Contract Price under provision of Document 00700 - General Conditions, Paragraph 3.11.

1. Street Cut Permit. Allow stipulated sum of $2,500.00 for Street Cut Permit Application Fee(s) as described in Paragraph 1.11.

2. The street lighting (Re-Bore Circuit/pull box/light installation) up front cost of $20,000 is to be provided to the Contractor. Contractor to pay CenterPoint Energy for street lighting installation.

3. Utility pole relocation up front cost of $15,000 is to be provided to the Contractor. Contractor to pay CenterPoint Energy for utility pole relocation.

1.06 INCENTIVE ALLOWANCES

A. None

1.07 CITY FURNISHED PRODUCTS

A. Item Furnished by City for Installation and Final Connection by Contractor:

1. None

1.09 WORK SEQUENCE

A. Perform critical locates per Contract Drawings within 30 days from Notice to Proceed. Field-verify dimensions and conditions before commencing work. Report any discrepancies to Project Manager before commencing work. Submit documentation of work completion to the Project Manager as per Spec. 02317 – Excavation and Backfill for Utilities.

B. Due to overall project complexity and numerous active utility interface requirements, submit a sequence of construction for review by Project Manager. Proposed sequence of construction shall address proposed method and timing of major construction activities. Refer to Section 01325 – Construction Schedule for specific details.

C. Begin Work on proposed 12-inch water line along Ludington Dr. between Pembridge Dr. and Fondren Rd. Maintain service of 12-inch AC water line during construction of proposed 12-inch water line. Services transferred from the existing 12-inch AC water line to the proposed 12-inch water line must be completed prior to construction of 42-inch water line. Water line crossings transferred to proposed 12-inch water line are to be supported during construction of the 42-inch water line.

D. Begin Work at Braes Forest and work east to W. Airport.

E. High early strength concrete to be used at intersections of W. Bellfort & Pembridge, Ludington and Sandpiper, and from Sta. 56+90.00 to 70+00.00.

F. Work performed on tunnel crossing Fondren Rd. Sta.56+60.50 to 54+85.37 must be completed before commencing work on tunnel crossing HCFCD ditch D140-00-00 Sta.62+38.96 to 64+58.60. Construction of 42-inch water line and tunnel must be in accordance with traffic control plans and phasing.

G. Verify with Project Manager, proposed locations of vent piping prior to installation. Adjust locations as directed. No separate pay. Mount vent piping for air release valves on a single bollard, if directed by Project Manager.

H. Incorporate Traffic Control Plan and Traffic Control General Notes as shown in the construction drawings in proposed sequence of work.

I. Do not remove concrete pavement more than 14 days prior to installation of utilities. Protect adjacent concrete pavement lane that is to remain.

1.10 COORDINATION OF WORK

A. Schedule the Work with any other contractors of any trade of discipline working adjacent to the project site prior to and during construction. Schedule Work and connection with contractor performing Work for City of Houston Project WBS No. S-000900-0110-4 (74A-2: 42-inch Water Line along Hillcroft, Dublin, Dunlap, Easements, Haviland, Minetta, Canemont and Sandpiper from Coachcreek to W. Airport Blvd.)

B. If contractor constructing this project, WBS No. S-000900-0111-4 (74B) completes Work and is ready to chlorinate and test before contractor constructing 74A-2, then provide dished head plug. If contractor for 74A-2 has completed work and has already installed dished head plug, then remove dished head plug under appropriate bid item listed in Document 00410 – Bid Form

C. Schedule construction operations with City Project Manager, Traffic Management, Maintenance Division, and private utilities.

D. Contact METRO regarding facilities and bus routes that may be affected during construction activities.
   i. Coordinate work around METRO bus stops with Paul Weisser at METRO Bus operations, 713-615-7223 at least one month prior to beginning construction.
   ii. Provide a minimum of five (5) working days notice before construction begins in area.
   iii. Maintain access to all METRO bus stops. Replace METRO bus sign (stop) and temporary pedestrian pad/shelter along rerouted road for METRO passenger pick-up/drop-off.
   iv. METRO bus shelter to be temporarily relocated during construction activities.

E. Contact HISD Manager – Routing and Scheduling Mr. Aric Taylor at 713.613.3040 regarding facilities and school bus routes that may be affected during construction activities.

F. Coordination of the Work: Refer to Section 01312 – Coordination and Meetings.

G. Notify the Harris County Flood Control District's Property management Department in writing at least 48-hours prior to construction. Submit the HCFCD 48-hour preconstruction notification form and a copy of the approved construction drawings to HCFCD, 9900 Northwest Freeway, Houston, Texas 77092, Attn: Property Management Dept., by hand delivery or FAX to 713-684-4129.

H. Schedule testing and inspection of cathodic protection system and protective coatings for pipe, valves, and tanks with the City's independent consultant. Contact Wayne Dessens at 832-395-3833.

1.11 CONTRACTOR USE OF PREMISES

A. Comply with procedures for access to site and Contractor's use of rights-of-way as specified in Section 01145 - Use of Premises

B. Construction Operations: City's rights-of-way and easements

C. Utility Outages and Shutdown: Provide notification to City and private utility companies (when applicable) a minimum of 48 hours, excluding weekends and holidays, in advance of required utility shutdown. Schedule all work as required.

D. Work to be done to lines, grades, elevations, and locations as shown on Drawings.

E. Based on record drawings, existing AC water lines along Ludington Dr. and are in close proximity to the proposed 12-inch water line construction. Critical locate existing AC water lines linearly and parallel to 12-inch water line construction per Section 02317 – Excavation and Backfill for Utilities. It is Contractor's responsibility to protect existing AC water line.

F. Prevent overstress of any structure, and any part or member of it, during construction. This applies to existing work and structures affected by operations. Check effect of operations in this regard, and provide temporary supports and connections required to assure safety and stability of both new and existing work and to prevent overstress of any part.

G. Coordinate activity schedule and extend full cooperation to other contractors who have responsibilities either concurrent with, proceeding or following this Contractor's time along work site. Ensure availability of access, availability of selected portions of this area to others and provide appropriate information for planning purposes to other contractors

H. Traffic Control:

1. Traffic control plan responsive to Texas Manual on Uniform Traffic Control Devices (TMUTCD) and sealed by a Registered Professional Engineer is incorporated into Drawings. If traffic control will be implemented without modification to plan provided, submit letter confirming that decision. If traffic control will be modified from what is shown, submit traffic control plan in conformance with TMUTCD and sealed by Registered Professional Engineer.

2. Traffic Control Plan is provided for installation of water lines only. Specific traffic control plan required for pavement restoration must be provided by Contractor, sealed by a Registered Professional Engineer and conforming to TMUTCD. Submit traffic control plan to Project Manager for approval.

3. Traffic control provided is based on the assumption there is no conflict with traffic control from separate projects within construction limits. Adjust work sequence as necessary to prevent traffic control conflicts, or submit revised traffic control plans sealed by Registered Professional Engineer and conform to TMUTCD at no additional cost. Submit traffic control plan to Project Manager for approval.

4. For temporary pavement provide necessary backfill, subgrade, base and surface in accordance with the Traffic Control Plan and continuously maintain, as directed by Project Manager.

I. Work will be allowed which pertains to any tunneling operation 24 hours per day, provided above ground activities do not conflict with provisions of City of Houston Code of Ordinances, Section No. 40-28 and work does not occur on a Sunday or holiday without prior written approval. No night work shall occur in residential areas. A non-inclusive list of work pertaining to tunneling operation is as follows:

1. Tunnel Excavation and incidental work such as muck removal and hauling, ventilation, lighting, survey control of tunnel line and grade, etc.
2. Tunnel Primary Liner.
3. Ground Water Control and Ground Stabilization.
4. Pipe Installation.
5. Tunnel Grouting.

Project Manager will answer all questions where confusion may exist as to whether any such work pertains to tunneling operation.

J. Maintain storm drainage throughout entire project during all construction activities. Provide bypass pumping as required. No separate pay.

K. Implement groundwater control methods, while maintaining accessibility to driveways and cross streets.

L. Maintain local driveway access to residential and commercial properties adjacent to work areas. Provide temporary driveway access to driveways in accordance with Section 01555 – Traffic Control and Regulation and Section 01145 – Use of Premises. Coordinate with business owners and residents.

M. City's Utility Maintenance Division is not bound to assist the Contractor in locating existing utilities during construction. Contractor must verify location of existing utility lines prior to commencement of pipe laying operations.

N. Working multiple and separate crews during construction is allowed, as approved by Project Manager.

O. Field Office:

1. A Field Office is required on this project. See Section 01520 – Temporary Field Office.

2. Provide commercial internet service (either cable or DSL) with minimum of 10 Mbps download & upload speed, including associated peripherals, devices and cables for setting up a secure wireless and wired network (2 wired connections min.). Coordinate initial setup and future troubleshooting with internet service provider and Project Engineer. Provide network-ready wireless all-in-one B&W laser printer with document feeder (Brother MFC7840w or approved equal) including appropriate network cables. Provide one extra laser toner cartridge at all times until project close out. Installation of this printer and internet service is an additional condition of payment for mobilization as part of Section 01502.

P. Contractor shall locate the tunnel entrance shaft on the east side of the HCFCD Ditch tunnel crossing. Contractor shall delay construction of the tunnel exit shaft on the west side of the HCFCD Ditch crossing until tunneling operations are near the exit shaft location to minimize impacts to nearby residents. Contractor shall construct tunnel and pipeline from the entrance shaft and minimize construction operations at the exit shaft to minimize impacts to nearby residents.

Q. The Ludington Drive Bridge that crosses the HCFCD Ditch is considered a critical structure. Contractor shall provide specific instrumentation monitoring plan in accordance with Section 02425. Contractor shall establish survey points adjacent to the adjacent bridge structure and caisson. Contractor shall selectively install crack monitors on the bridge structure and perform surveys prior to construction, periodically during construction, and post-construction. Contractor shall submit to Project Manager for approval of monitoring plan and

locations of survey points and instrumentation prior to beginning construction of the tunnel.

R. Maintain access to mailboxes impacted by the water line installation at all times during construction. Temporary relocation and restoration of the mailboxes may be required to provide access. Coordinate with business owners and residents.

1.12 STREET CUT ORDINANCE

A. Excavations on or under pavement in the City's right-of-way must have a permit. Comply with City of Houston, Texas Ordinance No. 2000-1115, an ordinance amending Chapter 40 of the Code of Ordinances, Houston, Texas, relating to excavating in the Public right-of-way and comply with amendments provided by Texas Ordinance No. 2006-0595 including the following fee schedule:

Schedule of Permit Application Fees*

Initial Application Fee:	
Tunneling, Jacking and Boring only	$150.00
All other Methods of Excavation	$200.00

Permit Extension Application Fee:	
Other Than Steel Plate Temporary Surface	$ 25.00
Steel Plate Temporary Surface	$ 50.00
Data Entry Fee for Non-Electronic Submission (per application):	$ 50.00

* All fees/charges are non-refundable

Comply with the latest edition of street cut "New Pavement Repair and Pavement Replacement details".

Contractor shall comply with requirements from Chapter 12 of the City of Houston's Infrastructure Design Manual (dated October, 2002), entitled Street Cut Requirements".

B. The bid items for the cost of street cut pavement repair and replacement identified on the drawings are included in the Bid Form Part B (Document 00410 B).

C. Obtain all required permits and signs prior to performing any methods of construction involving street excavation in the existing pavement.

1.13 WARRANTY

A. Comply with warranty requirements in accordance with Document 00700 General Conditions.

1.14 INTERPRETATION OF CONFLICTS

A. Should conflicts occur in Contract Documents, request interpretation before proceeding with Work. Such requests shall first be preceded by a diligent investigation into Contract Documents. Contain evidence of such investigation in requests for interpretation.

1.15 GENERAL CONSTRUCTION NOTES

A. Notify the Utility Coordinating Committee at 1-800-669-8344 or (713) 223-4567, and the City of Houston Department of Public Works and Engineering, Civil Construction at (713) 837-7196, at least 48 hours prior to commencement of work.

B. Field verify existing facilities shown on the drawings by whatever means necessary (metal detection, probes, excavation, survey, others) prior to excavation for proposed utilities. Field verification work and utility adjustments shall be completed prior to excavation for proposed utilities. No separate pay item.

C. Call the Traffic Management and Maintenance Division of the City of Houston Public Works and Engineering Department when work is scheduled near signal conduits within the City of Houston (713) 837-7280. Call at least five working days in advance.

D. These plans and the surveys upon which they are based are tied into the official City of Houston survey system in compliance with ordinance No. 69-1978. City of Houston survey markers and monuments referenced have been included in this plan set.

E. Comply with OSHA Regulations and State of Texas laws concerning excavation, trenching and shoring as specified in City of Houston Ordinance No. 87-1457.

F. Conduct construction operation under this contract in conformance with the erosion control practices described in Document 01410 “TPDES Requirements” and Document 01570 “Storm Water Pollution Control” and the Storm Water Pollution Prevention Plans included in the construction drawings. Work identified in this project falls under Large Construction Activity with area disturbed to be one or more acres but less than five acres. TPDES requirements applicable to Large Construction Activity will apply.

G. Any pavement (such as wheel chair ramps, pavement curbs, sidewalks, driveways, bikeways, etc.), fences, gates, lawns, landscape features, irrigation

utilities, landscapes, culverts, inlets, manholes, signs or mail boxes and other improvements that have been disturbed due to utility construction shall be replaced with same quality material or better, according to City of Houston standard specifications. Contractors are required to bid accordingly.

1.16 EXISTING UTILITIES

A. Underground utilities exist in the vicinity of this project. While every effort has been made to show locations for existing utilities, they are approximate and other utilities may exist in the vicinity of this project, which are not shown on these plans. The location and grades of existing utilities are based on as-built information.

B. Public and private utility lines and customer service lines may exist that are not shown on the construction drawings. Locate, maintain and protect the integrity of these lines. Hand excavation may be required.

C. Coordinate with the proper utility company to relocate or divert any utility in conflict with proposed construction so as not to disrupt service of same. Restore relocated or diverted utility to its original condition and location upon completion of construction.

D. Do not interrupt existing water service. Proposed water lines shall be constructed and service transferred per City of Houston requirements prior to the commencement of any underground construction that may interfere with existing water service. Provide bypass waterlines during construction if needed to maintain existing water service. Contractors are required to bid accordingly.

E. Maintain existing water service and sanitary sewer service within construction area until construction of the new system is complete.

F. Determine the sizes of water meters that are found in field.

1.17 WATER LINES

A. This project shall be built by means of open-cut, trenchless construction and tunneling as noted on the drawings.

B. Water lines shall be constructed in accordance with current City of Houston specifications for large diameter water lines.

C. All utilities present on these drawings are shown at approximate locations based on the best available information. The contractor shall field determine the exact locations prior to commencing construction. Protect and support existing utilities and structures along the alignment as necessary for

construction. He or she shall be fully responsible for any and all damages caused by his or her failure to exactly locate and maintain these underground utilities, at no additional cost to the City of Houston.

D. Small Diameter Water Lines

i. The trenchless construction method will be used for water line construction unless otherwise shown on the construction drawings and project manual or otherwise instructed by the City Engineer. Whenever possible, the contractor shall make an effort to locate pits away from existing concrete or asphalt pavement, sidewalks, driveways, fences, culverts, inlets, manholes, power poles, light poles, trees, lawns, landscapes, existing structures and other improvements. No pits are allowed within driveways, canopy of 6-inch or larger trees or landscapes unless otherwise instructed by the City Engineer.

ii. Conduct all construction operation under this contract in conformance with the erosion control practices described in Document 01410 “TPDES Requirements” and Document 01570 “Storm Water Pollution Control” and the Storm Water Pollution Prevention Plans included in the construction drawings. Work identified in this project falls under Small Construction Activity with area disturbed to be one or more acres but less than five acres. TPDES requirements applicable to Small Construction Activity will apply.

iii. Any pavement (including wheel chair ramps, pavement curbs, sidewalks, driveways, bikeways, etc.), fences, gates, lawns, irrigation utilities, landscapes, ditches, culverts, inlets, manholes, signs or mail boxes and other improvements that have been disturbed due to utility construction shall be replaced with same quality material or better, according to City of Houston standard specifications. Contractors are required to bid accordingly.

iv. After abandoning the existing water line and transferring services to the proposed water line, the Contractor shall contact City of Houston, Drinking Water Operations Branch at 832-395-3800 for retrieving the automatic blow off valve assembly.

1.18 STORM SEWER

A. Adequate drainage shall be maintained at all times during construction and any drainage ditch or structure disturbed during construction shall be restored to the satisfaction of the owning authority. All construction storm runoff shall comply with the final draft of the Storm Water Management Handbook for construction activities, as prepared by Harris County, HCFCD and the City of Houston in compliance with NPDES requirements.

B. During any storm sewer and/or lead replacement, pull to the last full joint.

C. Contractor shall be responsible for removal of siltation in existing and proposed storm sewer systems (if necessary) that result from construction activities associated with this project.

D. All storm sewer 24-inch diameter and smaller impacted by installation of 42-inch water line will be removed and replaced. Storm sewer 30-inches and greater impacted by construction of 42-inch water line will be braced during construction as noted on drawings.

1.19 SANITARY SEWER

A. The contractor is fully responsible for damages to the existing sanitary sewer facilities as a result of this project. Sanitary sewers shall be constructed in compliance with the latest city specifications for sewer construction, and tested as specified in the city test procedure for either liquid or air, including all amendments and revisions thereto. Embedment and backfill for sanitary sewers shall be placed in accordance with City of Houston standard drawing unless otherwise noted.

B. Maintain service to all sewers during construction. Contractor is responsible for locating all sanitary sewer service laterals affected by construction. The city does not warranty the location or number or any sanitary leads shown in plans.

C. If a damaged sanitary sewer line is being replaced as a result of this construction, the transfer of service stubs from the existing to the proposed sanitary sewer must be included. Any stubs that are determined to be damaged by the project inspector shall be removed and replaced to the right-of-way line.

1.20 CONCRETE PAVEMENT REPLACEMENT

A. The Contract Drawings identify pavement that will remain immediately adjacent to lanes that will be removed and replaced to install proposed new utilities.

B. Contractor's Trench Safety System (reference Section 02260), special shoring (reference Section 02317, 1.08, 3.04D, 3.05F, H & I), and means and methods shall protect adjacent lanes of pavement that are not scheduled for removal and replacement. Contractor assumes the risk for damaged pavement and, unless otherwise directed by the City, the Contractor shall remove and replace the damaged pavement in accordance with Section 02951 and the Street Cut Ordinance at no additional cost to the City. Damage includes but is not limited to pavement cracks, chipped or broken pavement, and voids under adjacent pavement that is to remain. City may also assess additional costs to the

Contractor related to the damaged pavement such as City laboratory testing and inspection.

C. Where work requires cutting existing pavement, provide positive shoring extending a minimum of 6-inches above pavement surface.

D. Unless otherwise directed by the City, provide full-depth saw-cut 2-inch maximum away from pavement construction joints (ex., deformed metal joints, tooled joints, partially sawcut joints, etc.). Saw cut distance from joint shall be minimum necessary for a clean straight edge, and if the joint is at the crown the saw cut shall be as close to the crown as possible.

E. Dowels at existing expansion joints shall be saw cut to eliminate possible damage to adjacent pavement that is scheduled to remain. The cost for this saw cut is incidental to the pavement removal and disposal pay item(s).

F. If existing pavement thickness is less than 7-inches thick, then dowels will be deleted and the Non Doweled Joint detail will be used instead, unless directed otherwise by the City.

G. Pavement that is scheduled to be removed and replaced shall be removed no earlier than fourteen (14) days prior to excavating to install new utilities and/or pavement.

1.21 STORM WATER POLLUTION PREVENTION PLAN

A. The Storm Water Pollution Prevention Plan for this project is governed by Section 01410 TPDES Requirements and the layouts provided in the construction drawings. Comply with Storm Water Pollution Prevention Plan as detailed in the construction documents.

1.22 ALTERNATE CONSTRUCTION METHODS

A. Alternate construction methods will be allowed in accordance with applicable details and specifications in Contract Documents at no additional cost to City of Houston provided City will receive substantial benefit from alternate construction method(s). Contractor accepts responsibility for all additional cost of geotechnical investigations and incidental items, including any re-design that may be necessary. Submit following for review by City Engineer prior to commencement of any construction activity if such alternate construction methods are to be considered. All modifications as listed below must be signed and sealed by a Licensed Professional Engineer registered in State of Texas prior to submittal to City Engineer.

1. Revisions to horizontal or vertical alignment.
2. Revisions to access manhole details, if applicable.

3. Revisions to line valve and operator manhole details, if applicable.
4. Revisions to vacuum relief valve vault details, if applicable.
5. Revisions to cathodic protection system, if applicable.
6. Proposed construction method and detailed plan of approach.
7. Location of access shafts, if applicable.
8. Proposed traffic control plan.
9. Revisions to material specifications.
10. Impact of revised alignment on hydraulic surge potential on line segment in question and all adjacent line segments, existing or proposed.

Failure of agreement between Contractor and Project Manager over proposed alternate construction methods would require construction to vertical and horizontal alignment, and details as per original contract documents.

1.23 ADDITIONAL CONDITIONS FOR SUBSTANTIAL COMPLETION

A. In addition to requirements outlined in Document 00700 – General Conditions, for Contractor to be substantially complete with the Work and call for inspection, the Project Manager to confirm the following conditions have been met or completed:

1. Draft O&M manuals shall be delivered to Project Manager.
2. Training shall be conducted utilizing draft O&M manuals.
3. All safety-related systems and equipment shall be installed, accepted by manufacturer's representative and approved for use.
4. All pay items shall be complete.
5. All safety related work including pavement striping, signing, and signalization to be complete.
6. After satisfactory completion of disinfection and hydrostatic testing, risers are removed and capped directly at water line. No portion of riser is extending from water line.
7. Cathodic protection system successfully commissioned. Provide commissioning report and copy of electric utility bill to transfer service to City.
8. Acceptable test results for all pavements including but not limited to pavement thickness cores and cylinder breaks achieving minimum compressive strengths.
9. All waste materials, excess materials, construction equipment, temporary traffic control devices, and other resources shall be removed.
10. All restoration completed, including but not limited to sidewalks, ramps, pavement, grass, street lighting, and etc. (including restoration that was incidental to other work or damaged by the contractor)"
11. Provide documentation signed by the City indicating that all salvaged materials have been turned over to the City.

1.24 PIPELINES

A. Refer to Specification Section 02317- Excavation and Backfill for Utilities for specific requirements on excavating near pipelines.

1.25 SOIL CONDITIONS & ENVIRONMENTAL SITE ASSESSMENTS (ESA)

A. Bidder(s) must consider the soil conditions and ESA findings provided in the Geotechnical Report and ESA Phase I Report, respectively. These reports have been provided on a CD, which is attached to the Project Manual.

1.26 SAFETY SYSTEMS

A. The plans and any attendant drawings (including shop drawings, as built drawings or record drawings), addenda, change orders and specifications, prepared by Lockwood, Andrews & Newnam, Inc., do not extend to or include designs or systems pertaining to the safety of the construction contractor or its employees, agents, or representatives in their performance of the work. The seal of Lockwood, Andrews and Newnam's registered/licensed professional engineers hereon does not extend to any such safety systems that may now or hereafter be incorporated in these plans. The construction contractor shall prepare or obtain the appropriate safety systems, including the plans and specifications required by House Bill 662 and 665 enacted by the Texas Legislature.

1.27 UTILITY SERVICE LINES

A. Public utility service lines (water and sanitary sewer) are not shown on the drawings. Contractor shall anticipate that such service lines exist and repair them if damaged during construction. No separate pay will be made for repairs. The cost shall be incidental to the work.

1.28 CENTEROINT ENERGY ELECTRICAL FACILITIES

A. Overhead lines may exist on property. We have not attempted to mark those lines since they are clearly visible. All lines should be located prior to construction. Texas law, section 752, health & safety code, forbids all activities in which persons or things may come within six (6) feet of live overhead high voltage lines. Parties responsible for work, including contractors, are legally responsible for safety of construction workers under this law. This law carries both criminal and civil liability. To arrange for lines to be turned off or removed call Centerpoint Energy at (713) 207-2222.

B. Location of CenterPoint Energy electrical facilities, are approximate and have not been verified by actual field check

C. Hand dig with in one (1) foot of CenterPoint Energy underground electrical facilities.

D. Overhead lines exist on and adjacent to the project site, which may be live during the construction period. Facilitate work so as not to interrupt services unless permitted by CenterPoint Energy.

E. Exercise caution when working in the vicinity of CenterPoint Energy electrical cable, underground wiring and overhead lines.

F. When excavation within 5 feet and beneath a depth of 3 feet below existing grade of a utility pole or anchor to which CenterPoint Energy facilities are attached, CenterPoint Energy will secure or brace these poles and anchor prior to excavation. The cost of CenterPoint Energy's efforts is incidental. "No separate pay item"

1.29 CENTERPOINT ENERGY UNDERGROUND GAS FACILITIES

A. Locations of Center Point Energy main lines (to include United Gas Transmission and/or Industrial Gas Supply Corporation where applicable) are shown in an approximate location only. Service lines are not usually shown. The contractor shall contact the Utility Coordinating Committee at (713) 223-4567 of 1-800-669-8344 a minimum of 48 hours prior to construction to have main and service lines field located.

B. When Center Point Energy pipeline markings are not visible, call (713)967-8037 (7:00 am to 4:30 pm) for status of line location request before excavation begins.

C. When excavating within eighteen inches (18") of the indicated location of CenterPoint Energy facilities, all excavation must be accomplished using non-mechanized excavation procedures.

D. When Center Point Energy facilities are exposed, sufficient support must be provided to the facilities to prevent excessive stress on the piping.

E. The contractor is fully responsible for any damages caused by his failure to exactly locate and preserve these underground facilities.

F. All gas facilities are the property of CenterPoint Energy, unless otherwise noted.

1.31 AT&T TEXAS/SBC (Telephone Facilities)

A. The locations of AT&T TEXAS/SBC utilities are shown in an approximate way only. The contractor shall determine the exact location before commencing work. He agrees to be fully responsible for any damages and all damages, which might be occasioned by his failure to exactly locate and preserve these underground utilities.

B. Call 1-800-344-8377 a minimum of 48 hours prior to construction to have underground lines field located.

C. When excavation within eighteen inches (18") of an indicated location of AT&T TEXAS/SBC facilities, all excavations must be accomplished by using non-mechanized excavation procedures. When boring, the contractor shall expose AT&T TEXAS/SBC facilities.

D. When AT&T TEXAS/SBC facilities are exposed, the contractor will provide support to prevent damage to the conduit ducts or cables. When excavating near telephone poles, the contractor shall brace the pole for support.

E. Please contact the AT&T Texas Damage Prevention manger, Mr. Roosevelt Lee Jr. at (713) 567-4552 ore-mail at rl7259@att.com, if there are questions about boring or excavation near AT&T Texas facilities.

1.32 TREE PROTECTION

A. Notify City of Houston Parks and Recreation Department representative Mr. Victor Cordova, City Forester, at (713) 867-0378, at least two (2) weeks in advance of clearing cutting or pruning any tree.

B. Adhere to the requirements of Specification Section 01562 - Tree and Plant Protection, Section 02915 – Tree Planting, and Tree Protection Plan provided in Contract Drawings. Protect existing trees, landscaping, and sprinkler systems. Repair damaged sprinkler systems and replace damaged landscaping to original condition or better. No separate payment.

C. Live trees removed must be replaced with equivalent size in inches or with multiple trees whose cumulative size equates to the size of the tree being replaced. Tree replacement includes cost of new tree, installation, watering and warranty per Specification Section 02915, at no additional cost.

PART 2 PRODUCTS

2.01 TYPE OF PIPE FOR CONSTRUCTION OF WATER LINE

A. Drawings have been prepared on basis of Prestressed Concrete Cylinder Pipe (PCCP) except where specific pipe material is identified. Certain details pertaining to all types of pipe have been included when a specific difference exists. Include costs associated with changes in installation and construction, tie-ins, valves, vaults, and other appurtenances to accommodate alternate pipe in unit cost of water line construction.

B. Only one type of pipe material may be used where material alternates are

allowed. When adjoining proposed large diameter water line to existing large diameter water line of different pipe material and/or coating, provide a flanged connection insulating kit, and isolation test station, unless otherwise approved by Project Manager. Specifications and design criteria have been provided for these types of pipe. It is Contractor's responsibility to ensure that type of pipe selected and resulting methods and means complies with requirements and limitations set forth herein and on Drawings including traffic control.

D. Unless specifically identified on Drawings, types of materials used are Contractor's option. Manufacturer and subcontractor selection are within Contractor's control and will not warrant time extensions due to failure to produce required deliverables within Contract Time. Extension of Contract Time due to non-delivery of Contractor's choice of pipe material, which affects Contractor's schedule, will not be allowed. Contractor to submit pipe material and other critical submittals in a timely manner to allow sufficient review time by Project Manager and to maintain construction schedule.

E. Provide bends and fittings as required to comply with invert elevations shown in profile view of Drawings. Call outs for bends and fittings are not identified on Drawings in profile view.

F. Clearly identify different pipe classes of the same pipe material using colored concrete or similar marking as approved by Project Manager.

G. Provide flange isolation kits with isolation test station for electrical isolation when connecting to existing pipe and at connections with plant facilities, and when adjoining to pipe with different material or coating.

J. No separate payment for restrained or welded joints.

PART 3 E X E C U T I O N (Not Used)

END OF SECTION

Section 01145

USE OF PREMISES

1.01 SECTION INCLUDES

A. General use of the site including properties inside and outside of rights-of-way, work affecting road, ramps, streets and driveways and notification to adjacent occupants.

1.02 RIGHTS-OF-WAY

A. Confine access, and operations and storage areas to rights-of-way provided by the City as stipulated in Document 00700 - General Conditions; trespassing on abutting lands or other lands in the area is not allowed.

B. Make arrangements, at no cost to the City, for temporary use of private properties. Contractor and Surety shall indemnify and hold harmless the City against claims or demands arising from such use of properties outside of rights-of-way. Submit a copy of agreements between private property owners and Contractor prior to use of the area. Agreements between private property owners and Contractor shall be notarized or bear the signatures of two witnesses.

C. Obtain written permission from City of Houston Parks and Recreation Department for storage of materials on esplanades and other areas within rights-of-way under that department's jurisdiction. Submit copies of written permission prior to use of the area.

D. Restrict total length of distributed materials along the route of construction to 1,000 linear feet unless otherwise approved in writing by City Engineer.

1.03 PROPERTIES OUTSIDE OF RIGHTS-OF-WAY

A. Do not alter the condition of properties adjacent to and along rights-of-way.

B. Do not use ways, means, methods, techniques, sequences, or procedures that result in damage to properties or improvements.

C. Restore damaged properties outside of rights-of-ways at no cost to the city

1.04 USE OF SITE

A. Obtain approvals from governing authorities prior to impeding or closing public roads and streets. Do not close more than two consecutive intersections at one time.

B. Notify Project Manager and Public Works and Engineering Traffic Management Branch at least five working days prior to closing a street or street crossing. Obtain permits for street closures in advance.

C. Maintain 10-foot-wide minimum access lanes for emergency vehicles including access to fire hydrants.

D. Avoid obstructing drainage ditches or inlets. When obstruction is unavoidable due to requirements of the Work, provide grading and temporary drainage structures to maintain unimpeded flow.

E. Locate and protect private lawn sprinkler systems that may exist within the site. Repair or replace damaged systems to condition existing at start of the Work, or better. Test irrigation system prior to construction.

F. Conform to daily clean-up requirements of Article 3 of Document 00700 - General Conditions.

G. Beware of overhead power lines existing in area and in close proximity of the Project. When 10 feet of clearance between energized overhead power line and construction-related activity cannot be maintained, request Center Point Energy (CPE) de-energize or move conflicting overhead power line. Contact CPE representatives at (713) 207-2222. Schedule, coordinate and pay costs associated with de-energizing or moving conflicting overhead power lines. When there is no separate pay item for this effort, include these costs in various items of bid that make such work necessary.

1.05 NOTIFICATION TO ADJACENT OCCUPANTS

A. Notify individual occupants in areas to be effected by the Work of proposed construction and time schedule. Notify not less than 72 hours or more than two weeks prior to work performed within 200 feet of homes or businesses. Follow form and content of sample door hanger provided by Project Manager.

B. Include in notification nature of the Work, and names and telephone numbers of two company representatives for resident contact available on 24-hour call.

C. Submit proposed notification to Project Manager for approval. Consider ethnicity of the neighborhood where English is not the dominant language. Provide notice in an understandable language.

1.06 PUBLIC, TEMPORARY, AND CONSTRUCTION ROADS AND RAMPS

A. Construct and maintain temporary detours, ramps, and roads to provide for normal public traffic flow when it is necessary to close public roads or streets.

B. Provide mats or other means to prevent overloading or damage to existing roadways from tracked equipment, large tandem axle trucks or equipment that will damage the existing roadway surfaces.

C. Construct and maintain access roads and parking areas as specified in Section 01504 - Temporary Facilities and Controls.

1.07 EXCAVATION IN STREETS AND DRIVEWAYS

A. Avoid hindering or inconveniencing public travel on streets or intersecting alleys for more than two blocks at any one time, except by permission of City Engineer.

B. Obtain Traffic Management Branch and City Engineer's approval when nature of the Work requires closure of an entire street. Permits required for street closure are Contractor's responsibility. Avoid unnecessary inconvenience to abutting property owners.

C. Remove surplus materials and debris and open each block for public use, as work in that block is complete.

D. Acceptance of any portion of the Work will not be based on return of street to public use.

E. Avoid obstructing driveways or entrances to private property.

F. Provide temporary crossings or complete excavation and backfill in one continuous operation to minimize duration of obstruction when excavation is required across drives or entrances.

G. Provide barricades and signs in accordance with Section VI of the State of Texas Manual on Uniform Traffic Control Devices.

1.08 TRAFFIC CONTROL

A. Comply with traffic regulation as specified in Section 01555 - Traffic Control and Regulation.

1.09 SURFACE RESTORATION

A. Restore the site including landscaping to the condition existing before construction, or better.

B. Repair paved areas per the requirements of Section 02951 - Pavement Repair and restoration.

C. Repair damaged turf areas, level with bank run sand conforming to Section 02317 - Excavation and Backfill for Utilities, or topsoil conforming to Section 02911 - Topsoil, and re-sod in accordance with Section 02922 - Sodding. Water and level newly sodded areas with adjoining turf using appropriate steel wheel rollers for sodding. Do not use spot sodding or sprigging.

1.10 LIMITS OF CONSTRUCTION

A. Confine operations to lands within construction work limits shown on Drawings. Unless otherwise noted on Drawings adhere to the following:

1. Where utility alignment is within esplanade, and construction limits are shown on Drawings to extend to edge of esplanade, keep equipment, materials, stockpiles a minimum of five feet from back of curb.

2. Where construction limits shown on Drawings extend to property line, keep sidewalks free of equipment, materials, and stockpiles.

1.11 EQUIPMENT AND MATERIAL SALVAGE

A. Upon completion of the Work, carefully remove salvageable equipment and material. Deliver them to City of Houston as directed by Project Manager. Dispose of equipment offsite at no additional cost to the City when Project Manager deems equipment unfit for further use.

PART 2 P R O D U C T S - Not Used

PART 3 E X E C U T I O N - Not Used

END OF SECTION

Section 01255

CHANGE ORDER PROCEDURES

PART 1 G E N E R A L

1.01 SECTION INCLUDES

A. Procedures for processing Change Orders, including:

1. Assignment of a responsible individual for approval and communication of changes in the Work;

2. Documentation of change in Contract Price and Contract Time;

3. Change procedures, using proposals and Modifications;

4. Execution of Change Orders;

5. Correlation of Contractor submittals.

1.02 REFERENCES

A. Blue Book is defined as the Rental Rate Blue Book for Construction Equipment (a.k.a. Data Quest Blue Book).

B. Rental Rate is defined as the full-unadjusted base rental rate for the appropriate item of construction equipment.

1.03 RESPONSIBLE INDIVIDUAL

A. Provide a letter indicating the name and address of the individual authorized to execute Modifications, and who will be responsible for informing others in Contractor's employ and Subcontractors of changes to the Work. Provide this information at the pre-construction meeting.

1.04 DOCUMENTATION OF CHANGE IN CONTRACT PRICE AND CONTRACT TIME

A. Maintain detailed records of changes in the Work. Provide full information required for identification and evaluation of proposed changes, and substantiate costs of changes in the Work.

B. Document each proposal for change in Contract Price or Contract Time with sufficient data to allow evaluation of proposal.

C. Include the following minimum information on proposals:

1. Quantities of items in original Document 00410 – Bid Form with additions, reductions, deletions, and substitutions.

2. Quantities and cost of items in original Schedule of Values with additions, reductions, deletions and substitutions.

3. Provide Unit Prices for new items, with supporting information, for inclusion in Schedule of Unit Price Work.

4. Justification for changes in Contract Time.

5. Additional data upon request.

D. For changes in the Work performed on a time-and-material basis, provide the following additional information:

1. Quantities and description of Products.

2. Taxes, insurance and Bonds.

3. Overhead and profit as noted in Document 00700 - General Conditions.

4. Dates, times and by who work was performed.

5. Time records and certified copies of applicable payrolls.

6. Invoices and receipts for Products, rental equipment, and subcontracts, similarly documented.

E. For changes in the Work performed on a time-and-materials basis, rental equipment is paid as follows:

1. Actual invoice cost for duration of time required to complete extra work without markup for overhead and profit. When extra work comprises only a portion of a rental invoice where equipment would otherwise be on site, compute hourly equipment rate by dividing the actual monthly invoice by 176. One day equals eight hours and one week equals 40 hours.

2. Do not exceed estimated operating costs given in Blue Book for items of equipment. Overhead and profit will be allowed on the operating cost.

F. For changes in the Work performed on a time-and-materials basis using Contractor-owned equipment, use Blue Book rates as follows:

1. Contractor-owned equipment will be paid at the Blue Book Rental Rate for the duration of time required to complete extra work without markup for overhead and profit. Utilize lowest cost combination of hourly, daily, weekly or monthly rates. Use 150 percent of Rental Rate for double shifts, one extra shift per day, and 200 percent of Rental Rate for more than two shifts per day. Standby rates shall be 50 percent of the appropriate Rental Rate shown in Blue Book. No other rate adjustments apply.

2. Do not exceed estimated operating costs given in Blue Book. Overhead and profit will be allowed on operating costs. Operating costs will not be allowed for equipment on standby.

1.05 CHANGE PROCEDURES

A. Changes to Contract Price or Contract Time can only be made by issuance of Document 00941 - Change Order. Issuance of Document 00940 - Work Change Directive will be formalized into a Change Order. Changes will be in accordance with requirements of Document 00700 - General Conditions.

B. City Engineer will advise of Minor Changes in the Work as authorized by the Document 00700 - General Conditions by issuing Document 00942 – Minor Change.

C. Request clarification of Drawings, Specifications, Contract documents or other information by using Document 00931- Request for Information. Response by Project Manager to Requests for Information does not authorize Contractor to perform tasks outside scope of the Work. Changes must be authorized as described in this Section.

1.06 PROPOSALS AND CONTRACT MODIFICATIONS

A. Project Manager may issue Document 00932- Request for Proposal, which includes a detailed description of the proposed change with supplementary or revised Drawings and Specifications. Project Manager may also request a proposal in response to a Request for Information. Prepare and submit the proposal within seven days or as specified in request.

B. Submit requests for Contract changes to City Engineer describing proposed change and its full effect on the Work, with a statement describing reason for change and effect on Contract Price and Contract Time including full documentation.

C. Design Consultant may review Change Orders.

1.07 WORK CHANGE DIRECTIVE

A. City Engineer may issue a signed Work Change Directive instructing Contractor to proceed with a change in the Work. Work Change Directive will subsequently be incorporated into a Change Order.

B. Work Change Directives will describe changes in the Work and designate the method of determining change in Contract Price or Contract Time.

C. Proceed promptly to execute changes in the Work in accordance with the Work Change Directive.

1.08 STIPULATED PRICE CHANGE ORDER

A. A Stipulated Price Change Order will be based on an accepted proposal.

1.09 UNIT PRICE CHANGE ORDER

A. Where Unit Prices for affected items of the Work are included in Document 00410 – Bid Form, the Change Order will be based on Unit Prices, subject to Articles 7 and 9 of Document 00700 - General Conditions.

B. Where Unit Prices of the Work are not pre-determined in Document 00410-Bid Form, the Work Change Directive or accepted proposal will specify the Unit Prices to be used.

1.10 TIME-AND-MATERIAL CHANGE ORDER

A. Provide itemized account and supporting data after completion of change, within time limits indicated for claims in Document 00700 - General Conditions.

B. City Engineer will determine the change allowable in Contract Price and Contract Time as provided in Document 00700 - General Conditions.

C. Maintain detailed records for work done on time-and-material basis as specified in Paragraph 1.04 above.

D. Provide full information required for evaluation of changes and substantiate costs for changes in the Work.

1.11 EXECUTION OF CHANGE DOCUMENTATION

A. City Engineer will issue Change Orders, Work Change Directives, or Minor Change in the Work for signatures of Parties as described in Document 00700 - General Conditions.

1.12 CORRELATION OF CONTRACTOR SUBMITTALS

A. For Stipulated Price Contracts, promptly revise Schedule of Values and Application for Payment forms to record authorized Change Orders as separate line item.

B. For Unit Price Contracts, the next monthly estimate of the Work after acceptance of a Change Order will be revised to include new items not previously included with appropriate Unit Prices.

C. Promptly revise progress schedules to reflect change in Contract Time, and to adjust time for other items of work affected by the change, and resubmit for review.

D. Promptly enter changes to on-site and record copies of Drawings, Specifications or Contract documents as required in Section 01785 - Project Record Documents.

PART 2 P R O D U C T S - Not Used

PART 3 E X E C U T I O N - Not Used

END OF SECTION

Section 01270S

MEASURMENT AND PAYMENT

The following supplements modify Section 01270 – Measurement and Payment Specification. Where a portion of the Specification is modified or deleted by this Supplementary Specification, the unaltered portions of the Specification shall remain in effect.

Insert the following paragraph:

1.08 MEASUREMENT AND PAYMENT FOR PROJECT SPECIFIC ITEMS

A. 42-INCH WATER LINE

1. Bid Item 10 – "Site Restoration for Small Diameter Water Line." Payment will be on a linear foot basis. Payment includes labor, equipment, and materials necessary to restore site due to work associated with the small diameter water line installation only. Site Restoration is to be in accordance with specification section 01740 and in accordance with drawings.

2. Bid Item 53 – "Remove and Encase - 8-inch diameter Sanitary Sewer." Payment will be on a linear foot basis. Payment includes labor, equipment, and materials necessary to cut existing 8" HDPE, encase in 12" pressure rated PVC and repair connection in accordance with drawings.

3. Bid Item 62 – "Support 30-inch or 42-inch Storm Sewer." Payment will be for each 30-inch or 42-inch storm sewer support. Payment includes labor, equipment, and materials necessary to support existing 30-inch or 42-inch storm sewer as required to construct 42-inch water line crossing in accordance with drawings.

4. Bid Item 74 – "Remove and Replace Metro Bus Stop Pad." Payment will be on a square foot basis. Payment includes labor, equipment, and materials necessary to remove and replace the bus stop pad in accordance with drawings.

5. Bid Item 86 – "Non Doweled Expansion Joint." This item will be paid on a linear foot basis. Payment includes labor, materials and equipment to furnish and install non doweled joint in accordance with Non Doweled Joint Detail.

END OF SUPPLEMENT

Approved by:

Arthur Mavis for — 4/12/2013

Hamlet Hovsepian, P.E.
Assistant Director
Water Engineering Section
Engineering and Construction Division

Date

Section 01270

MEASUREMENT AND PAYMENT

PART 1 G E N E R A L

1.01 SECTION INCLUDES

A. Procedures for measurement and payment plus conditions for nonconformance assessment and nonpayment for rejected Products.

1.02 AUTHORITY

A. Measurement methods delineated in Specification sections are intended to complement criteria of this Section. In event of conflict, requirements of the Specification section shall govern.

B. Project Manager will take all measurements and compute quantities accordingly.

C. Assist by providing necessary equipment, workers, and survey personnel.

D. Measurement and Payment paragraphs are included only in those Specification sections of Division 01 where direct payment will be made. Include costs in the total bid price for those Specification sections in Division 01 that do not contain Measurement and Payment paragraphs,

1.03 UNIT QUANTITIES SPECIFIED

A. Quantity and measurement estimates stated in the Agreement are for contract purposes only. Quantities and measurements supplied or placed in the Work and verified by Project Manager will determine payment as stated in Article 9 of Document 00700 - General Conditions.

B. When actual work requires greater or lesser quantities than those quantities indicated in Document 00410 – Bid Form, provide required quantities at Unit Prices contracted, except as otherwise stated in Article 9 of Document 00700 - General Conditions.

1.04 MEASUREMENT OF QUANTITIES

A. Measurement by Weight: Reinforcing steel, rolled or formed steel or other metal shapes are measured by CRSI or AISC Manual of Steel Construction weights. Welded assemblies are measured by CRSI or AISC Manual of Steel Construction or scale weights.

B. Measurement by Volume:

1. Stockpiles: Measured by cubic dimension using mean length, width, and height or thickness.

2. Excavation and Embankment Materials: Measured by cubic dimension using average end area method.

C. Measurement by Area: Measured by square dimension using mean length and width or radius.

D. Linear Measurement: Measured by linear dimension, at item centerline or mean chord.

E. Stipulated Price Measurement: By unit designated in the Agreement.

F. Other: Items measured by weight, volume, area, or linear means or combination, as appropriate, as completed item or unit of the Work.

G. Measurement by Each: Measured by each instance or item provided.

H. Measurement by Lump Sum: Measure includes all associated work.

1.05 PAYMENT

A. Payment includes full compensation for all required supervision, labor, Products, tools, equipment, plant, transportation, services, and incidentals; and erection, application or Installation of an item of the Work; and Contractor's overhead and profit.

B. Total compensation for required Unit Price work shall be included in Unit Price bid in Document 00410 – Bid Form. Claims for payment as Unit Price work, but not specifically covered in the list of Unit Prices contained in Document 00410 – Bid Form, will not be accepted.

C. Interim payments for stored materials will be made only for materials to be incorporated under items covered in Unit Prices, unless disallowed in Document 00800 - Supplementary Conditions.

D. Progress payments will be based on Project Manager's observations and evaluations of quantities incorporated in the Work multiplied by Unit Price.

E. Final payment for work governed by Unit Prices will be made on the basis of actual measurements and quantities determined by Project Manager multiplied by the Unit Price for work which is incorporated in or made necessary by the Work.

1.06 NONCONFORMANCE ASSESSMENT

A. Remove and replace work, or portions of the Work, not conforming to the Contract documents.

B. When not practical to remove and replace work, City Engineer will direct one of the following remedies:

1. Nonconforming work will remain as is, but Unit Price will be adjusted lower at discretion of City Engineer.

2. Nonconforming work will be modified as authorized by City Engineer, and the Unit Price will be adjusted lower at the discretion of City Engineer, when modified work is deemed less suitable than specified.

C. Specification sections may modify the above remedies or may identify a specific formula or percentage price reduction.

D. Authority of City Engineer to assess nonconforming work and identify payment adjustment is final.

1.07 NONPAYMENT FOR REJECTED PRODUCTS

A. Payment will not be made for any of the following:

1. Products wasted or disposed of in an unacceptable manner.

2. Products determined as nonconforming before or after placement.

3. Products not completely unloaded from transporting vehicles.

4. Products placed beyond lines and levels of required work.

5. Products remaining on hand after completion of the Work, unless specified otherwise.

6. Loading, hauling, and disposing of rejected Products.

PART 2 P R O D U C T S - Not Used

PART 3 E X E C U T I O N - Not Used

END OF SECTION

Section 01292

SCHEDULE OF VALUES

PART 1 G E N E R A L

1.01 SECTION INCLUDES

A. Preparation and submittal of Schedule of Values for Stipulated Price Contracts or for Major Unit Price Work on Unit Price Contracts.

1.02 PREPARATION

A. For Stipulated Price Contracts, subdivide the Schedule of Values into logical portions of the Work, such as major work items or work in contiguous construction areas. Use Section 01325 - Construction Schedule as a guide to subdivision of work items. Directly correlate Items in the Schedule of Values with tasks in the Construction Schedule. Organize each portion using the Project Manual Table of Contents as an outline for listing value of the Work by Sections. A pro rata share of mobilization, Bonds, and insurance may be listed as separate items for each portion of the Work.

B. For Unit Price Contracts, items should include a proportional share of Contractor's overhead and profit so that total of all items will equal Contract Price.

C. For lump sum equipment items, where submittal of operation and maintenance data and testing are required, include separate items for equipment operation and maintenance data where:

1. submittal of maintenance data is valued at five percent of the lump sum amount for each equipment item and

2. submittal for testing and adjusting is valued at five percent of the lump sum amount for each equipment item.

Round off figures for each item listed to the nearest $100. Set the value of one item, when necessary, to make total of all values equal the Contract Price for Stipulated Price Contracts or the lump sum amount for Unit Price Work.

1.03 SUBMITTAL

A. Submit the Schedule of Values, in accordance with requirements of Section 01330 - Submittal Procedures, at least 10 days prior to processing of the first Certificate for Payment.

B Submit the Schedule of Values in an approved electronic spreadsheet file and an 81/2-inch by 11-inch print on white bond paper.

C. Revise Schedule of Values for items affected by Contract Modifications. After City Engineer has reviewed changes, resubmit at least 10 days prior to the next scheduled Certificate for Payment date.

PART 2 P R O D U C T S - Not Used

PART 3 E X E C U T I O N - Not Used

END OF SECTION

Section 01312

COORDINATION AND MEETINGS

PART 1 G E N E R A L

1.01 SECTION INCLUDES

A. General coordination including pre-construction meeting, site mobilization conference, and progress meetings.

1.02 COORDINATION OF DOCUMENTS

A. Coordination is required throughout documents. Refer to Contract documents and coordinate as necessary.

1.03 CONTRACTOR COORDINATION

A. Coordinate scheduling, submittals, and work of various Specification sections to assure efficient and orderly sequence of Installation of interdependent construction elements.

B. Coordinate completion and clean up of the Work prior to the Date of Substantial Completion and for portions of the Work designated for City's partial occupancy.

C. Coordinate access to the site for correction of nonconforming work to minimize disruption of the City's activities where the City is in partial occupancy.

1.04 PRE-CONSTRUCTION MEETING

A. Project Manager will schedule pre-construction meeting.

B. Attendance Required: City representatives, Design Consultant, special consultants as required by Project Manager, Contractor, and major Subcontractors and Suppliers.

C. Agenda:

1. Distribution of Contract documents.

2. Designation of personnel representing the Parties and Design Consultant.

3. Review of insurance.

4. Discussion of formats for Schedule of Values and Construction Schedule.

5. Procedures and processing of Shop Drawings, substitutions, pay estimates or Applications for Payment, Requests for Information, Requests for Proposal, Modifications, and the Contract closeout, other submittals.

6. Scheduling of the Work and coordination with other contractors.

7. Review of Subcontractors and Suppliers.

8. Appropriate agenda items listed for the site mobilization conference, Paragraph 1.05.C, when pre-construction meeting and site mobilization conference are combined.

9. Procedures for testing.

10. Procedures for maintaining record documents.

1.05 SITE MOBILIZATION CONFERENCE

A. When required by Contract documents, Project Manager will schedule a conference at the Project site prior to Contractor mobilization.

B. Attendance Required: City representatives, Design Consultant, special consultants, Superintendent, and major Subcontractors.

C. Agenda:

1. Use of premises by the City and Contractor.

2. Safety and first aid procedures.

3. Construction controls provided by the City.

4. Temporary utilities.

5. Survey and layout.

6. Security and housekeeping procedures.

7. Field office requirements.

1.06 PROGRESS MEETINGS

A. Hold meetings at Project field office or other location designated by Project Manager. Hold meetings at monthly intervals, or more frequently when directed by Project Manager.

B. Attendance Required: Superintendent, major Subcontractors and Suppliers, City representatives, Design Consultant and its subconsultants as appropriate for agenda topics for each meeting.

C. Project Manager will make arrangements for meetings, and for recording minutes.

D. Project Manager will prepare the agenda and preside at meetings.

E. Provide required information and be prepared to discuss each agenda item.

F. Agenda:

1. Review minutes of previous meetings.

2. Review of construction schedule, pay estimates, cash flow curve, payroll and compliance submittals.

3. Field observations, problems, and necessary decisions.

4. Identification of problems that impede planned progress.

5. Review of submittal schedule and status of submittals.

6. Review of RFI and RFP status.

7. Modification status.

8. Review of off-site fabrication and delivery schedules.

9. Maintenance of Construction Schedule.

10. Corrective measures to regain Construction Schedule.

11. Planned progress during the succeeding work period.

12. Coordination of projected progress.

13. Maintenance of quality and work standards.

14. Effect of proposed Modifications on Construction Schedule and coordination.

15. Review Project Record Contract Drawings.

16. Other item relating to the Work.

PART 2 P R O D U C T S - Not Used

PART 3 E X E C U T I O N - Not Used

END OF SECTION

Section 01321

CONSTRUCTION PHOTOGRAPHS

PART 1 G E N E R A L

1.01 SECTION INCLUDES

A. Photographic requirements for construction photographs and submittals.

1.02 DEFINITIONS

A. Pre-construction Photographs: Photographs taken, in sufficient numbers and detail, prior to Date of Commencement of the Work, to show original construction site conditions.

B. Progress Photographs: Photographs, taken throughout the duration of construction at regular intervals and from fixed vantage points, pre-approved by the City, that document progress of the Work.

C. Finished Photographs: Photographs, taken by a professional photographer near Date of Substantial Completion and before City Council's acceptance of the Work, that are suitable for framing and for use in brochures or on the Internet

1.03 SUBMITTALS

A. Refer to Section 01330, Submittal Procedures, for submittal requirements.

B. Format and Media. Film or digital photography may be used. Submit color photographs, unless otherwise specified.

1. Prints. Submit each Progress or Pre-construction Photograph print in a three-hole plastic pocket or sleeve, bound in a three-ring notebook. Produce prints on photographic-quality paper approved by Project Manager. Minimum size for Pre-construction Photograph prints shall be 3-inches by 5-inches. Progress Photograph prints shall be 8-inches by 10-inches.

2. Film. Use 35mm or larger color film. Submit negatives used to make submitted photographs, in 3-hole 8-1/2 inch by 11-inch plastic sheets with sleeves for negatives.

3. Digital Photography. Use 2.1 megapixel density or greater for photographs. Scanned photographs must equal or exceed 400 dots

per inch when scanned from 8-inch by 10-inch prints. Submit digital photographic files on computer disks. Format disks for MS-DOS (Microsoft Disk Operating System) filing system and in JPEG (Joint Photographic Experts Group) format.

C. Submittal Quantities and Frequencies.

1. Pre-construction Photographs:
   a. For Stipulated Price Contracts, submit two sets of Pre-construction Photographs, if required, prior to first Application for Payment.
   b. For Unit Price Contracts, submit two sets of Pre-construction Photographs prior to start of construction operations.

2. Progress Photographs:
   a. For Stipulated Price Contracts, submit three sets of Progress Photographs with each Application for Payment at the times established for submittal of Applications for Payment. Monthly Applications for Payment shall be deemed incomplete if not accompanied by the required Progress Photographs. Contractor's failure or election to not submit a monthly Application for Payment shall not affect the requirement for monthly Progress Photographs.
   b. Progress Photographs are not required for Unit Price Contracts unless otherwise specified.

3. Finished Photographs: For Stipulated Price Contracts submit two sets of Finished Photographs, if required, after Date of Substantial Completion and prior to final payment. Each set shall contain one 11-inch by 14-inch matte finish color photographic print from each of the two vantage points pre-approved by the City. Vantage points for Finished Photographs will be approved separately from vantage points approved for Progress Photographs. Finished Photographs are not required for Unit Price Contracts unless otherwise specified.

D. Labeling. Place a label on the back of each photographic print, applied so as to not to show through on the front. Labels shall contain the following information:

1. Name of Project, address of Project and GFS Number.

2. Name and address of Contractor.

3. Date photograph was taken.

4. Location photo was taken from and short description of photo subject.

5. Name and address of professional photographer who took the photograph, if applicable.

E. Hand-deliver or transmit prints in standard photographic mailers marked “Photographs - Do Not Bend”.

F. Photographic prints, negatives, photographic files and disks become the property of the City. Do not be publish photographs without written consent by the City.

1.04 QUALITY ASSURANCE

A. Contractor shall be responsible for the quality of and timely execution and submittal of photographs.

B. For Finished Photographs, Contractor shall use a professional photographer, with five years minimum professional experience in the Houston area. Contractor shall submit name, address and credentials of professional photographer for Project Manager’s review and approval.

PART 2 PRODUCTS - Not Used

PART 3 EXECUTION

3.01 PRE-CONSTRUCTION PHOTOGRAPHS

A. Prior to commencement of construction operations, photograph the site to include initial construction corridor, detour routes, and staging or storage areas.

1. For Stipulated Price Contracts, unless specified as a requirement in other Sections, these photographs are optional for Contractor, but are highly recommended for areas bounded by other property owners.

2. Pre-construction photographs are required for Unit Price Contracts. For line projects with scheduled construction segments, take Pre-construction Photographs prior to commencement of work on each segment.

B. Prepare Pre-construction Photographs as follows:

1. Show the following information on a non-reflective chalkboard placed within the picture frame:
   a. Job number.
   b. Project Number.
   c. Date and time photographs were taken (Automatic date/time in negative is acceptable).
   d. Baseline station, direction of view (i.e. N, S, NW, etc.) and house number or street address and street name.

2. Pre-construction Photographs shall indicate condition of the following:
   a. Esplanades and boulevards.
   b. Yards (near side and far side of street).
   c. House walks and sidewalks.
   d. Curbs.
   e. Areas between walks and curbs.
   f. Particular features (e.g. yard lights, shrubs, fences, trees).

3. Show date photographs were taken on negatives.

C. Show the location of vantage points and direction of shots on a key plan of the site.

3.02 PROGRESS PHOTOGRAPHS

A. Progress Photographs document monthly advancement of the Work. Select vantage points for each shot so as to best show status of construction and progress since last photograph submittal. Select camera stations that will require little or no movement or adjustment over the duration of construction.

B. Take monthly Progress Photographs at regular intervals to coincide with cutoff dates associated with each Application for Payment.

3.03 FINISHED PHOTOGRAPHS

A. Finished Photographs shall be “staged” and taken by a professional photographer to depict the most flattering images of a finished facility. Two vantage points, from which Finished Photographs will be taken, shall be agreed to in advance by the City. Photographer shall consider lighting, time of day, height of eye, landscaping and placement of vehicles, people and other props in each picture. Filters and post-photography processing may be utilized to achieve a finished product acceptable to the City.

3.04 LOCATION

A. Vantage points, times and conditions for camera stations and photography for Progress and Finished Photographs shall be mutually agreed upon by the City, Contractor and Photographer. Progress Photograph vantage points may be changed by mutual agreement as the Work progresses, at no additional cost to the City.

END OF SECTION

Section 01326

CONSTRUCTION SCHEDULE (BAR CHART)

PART 1 G E N E R A L

1.01 SECTION INCLUDES

A. Provide an initial Construction Schedule as required by this section for the Work. Do not start construction until Project Manager reviews the schedule.

1.02 FORM AND CONTENT OF INITIAL CONSTRUCTION SCHEDULE

A. Bar Chart:

1. Show major construction activities such as pipe laying, by traffic control phases or other approved key areas; tunnel construction, pavement removal, pavement replacement, pressure testing, chlorination, clean up and punch list as separate activities on the schedule.

2. Show week duration for each activity.

3. Show separate activities for each Shop Drawing and Product Data submittal critical to timely completion. Show submittal dates and dates Project Manager needs to provide approved submittals.

4. Provide separate horizontal bar for each activity. List start and finish date for each activity at left side of diagram.

5. Horizontal Time Scale: Identify first work day of each week.

6. Scale and Spacing: Notes must be legible. Allow space for notations and future revisions.

7. Order of Listings: Order bar chart listings by phases or other approved groups of activities that are contiguous. List activities in chronological order within each phase or group.

B. Narrative Description:

1. Submit narrative descriptions of anticipated work sequences as indicated by the sequence of activities presented in the schedule.

2. Discuss any activity that affects the public (such as phases of traffic control), interaction with specific forces of the City (such as valve operation, chlorination and testing) or other associated contractors.

1.03 PROGRESS REVISIONS

A. Submit progress revisions or necessary information to complete and process Payment Applications. When required, re-submittals for rejected revisions must be submitted and reviewed prior to the following month's processing of a Payment Application. The following month's Payment Application will not be processed until the re-submittal is reviewed and required progress revisions are received.

B. Provide a narrative report to describe:

1. Major changes in scope.

2. Revised projections in progress, completion, or changes in activity duration.

3. Other identifiable changes.

4. Problem areas, anticipated delays, and the impact on schedule.

5. Corrective action recommended and its effect.

6. Effect of changes on schedules or other contractors.

7. Product delivery lead times.

C. Include additional data with Bar Chart described in Paragraph 1.03A of this Section:

1. Show original dates for each activity in the approved initial progress schedule by narrow bar next to a wider bar for the current schedule.

2. Show date each activity actually started or finished when an event has occurred. Clearly identify actual dates in two right-most columns in left portion of an 11 by 17-inch chart.

3. Indicate the percentage progress to the date of submittal for each activity.

1.04 SUBMITTALS

A. Submit the initial progress schedule within 15 days after award of contract. Project Manager will review the schedule and return a reviewed copy within 21 days after receipt.

B. Cut-off dates for progress revisions may be as early as the 20th of the month to avoid delaying processing of Payment Applications. Use the cut-off date for the first approved revision for further revisions.

C. When required, re-submit within seven days after return of review copy.

D. Include connecting lines between bars in the schedule to indicate the sequence that activities will be accomplished. Connecting lines when the activity's start or finish is modified will identify impact of preceding or succeeding activities. Submit a minimum of six copies of the bar chart on 11 by 17-inch opaque reproductions. Project Manager will retain five copies and return the remaining copy.

PART 2 P R O D U C T S - Not Used

PART 3 E X E C U T I O N - Not Used

END OF SECTION

Section 01330

SUBMITTAL PROCEDURES

PART 1 G E N E R A L

1.01 SECTION INCLUDES

A. Submittal procedures for:

1. Schedule of Values
2. Construction Schedules and Cash Flow Curve (billing forecast).
3. Shop Drawings, Product Data and Samples
4. Operations and Maintenance (O&M) Data
5. Manufacturer's Certificates
6. Construction Photographs
7. Project Record Documents and monthly certification.
8. Video Tapes
9. Design Mixes

1.02 SUBMITTAL PROCEDURES

A. Scheduling and Handling:

1. Submit Shop Drawings, data and Samples for related components as required by Specifications and Project Manager.
2. Schedule submittals well in advance of need for construction Products. Allow time for delivery of Products after submittal approval.
3. Develop submittal schedule that allows sufficient time for initial review, correction, resubmission and final review of all submittals. Allow a minimum of 30 days for initial review. Project Manager will review and return submittals to Contractor as expeditiously as possible but time required for review will vary depending on complexity and quantity of data submitted.

4. Project Manager's review of submittals covers only general conformity to Drawings, Specifications and dimensions that affect layout. Contractor is responsible for quantity determination. No quantities will be verified by Project Manager. Contractor is responsible for errors, omissions or deviations from Contract requirements; review of submittals does not relieve Contractor from the obligation to furnish required items in accordance with Drawings and Specifications.

5. Submit five copies of documents unless otherwise specified.

6. Revise and resubmit submittals as required. Identify all changes made since previous submittal.

7. Assume risk for fabricated Products delivered prior to approval. Do not incorporate Products into the Work, or include payment for Products in periodic progress payments, until approved by Project Manager.

B. Transmittal Form and Numbering:

1. Transmit each submittal to Project Manager with Transmittal letter which includes:
   a. Date and submittal number
   b. Project title and number
   c. Names of Contractor, Subcontractor, Supplier and manufacturer
   d. Identification of Product being supplied
   e. Location of where Product is to be Installed
   f. Applicable Specification section number

2. Identify deviations from Contract documents clouding submittal drawings. Itemize and detail on separate 8-1/2 by 11-inch sheets entitled "DEVIATIONS FOR _____." When no deviations exist, submit a sheet stating no deviations exist.

3. Have design deviations signed and sealed by an appropriate design professional, registered in the State of Texas.

4. Sequentially number transmittal letters beginning with number one. Use original number for resubmittals with an alphabetic suffix (i.e., 2A for the first resubmittal of submittal 2, or 15C for third resubmittal of submittal 15, etc.). Show only one type of work or Product on each submittal. Mixed submittals will not be accepted.

C. Contractor's Stamp:

1. Apply Contractor's Stamp certifying that the items have been reviewed in detail by Contractor and that they comply with Contract requirements, except as noted by requested variances.

2. As a minimum, Contractor's Stamp shall include:
   a. Contractor's name
   b. Job number
   c. Submittal number
   d. Certification statement Contractor has reviewed submittal and it is in compliance with the Contract
   e. Signature line for Contractor

D. Submittals will be returned with one of the following Responses:

1. "ACKNOWLEDGE RECEIPT" when no response and resubmittal is required.

2. "NO EXCEPTION" when sufficient information has supplied to determine that item described is accepted and that no resubmittal is required.

3. "EXCEPTIONS AS NOTED" when sufficient information has been supplied to determine that item will be acceptable subject to changes, or exceptions, which will be clearly stated. When exceptions require additional changes, the changes must be submitted for approval. Resubmittal is not required when exceptions require no further changes.

4. "REJECTED-RESUBMIT" when submittal does not contain sufficient information, or when information provided does not meet Contract requirements. Additional data or details requested by Project Manager must be submitted to obtain approval.

1.03 MANUFACTURER'S CERTIFICATES

A. When required by Specification sections, submit manufacturers' certificate of compliance for review by Project Manager.

B. Place Contractor's Stamp on front of certification.

C. Submit supporting reference data, affidavits, and certifications as appropriate.

D. Product certificates may be recent or from previous test results, but must be acceptable to Project Manager.

1.04 DESIGN MIXES

A. When required by Specification sections, submit design mixes for review.

B. Place Contractor's Stamp, as specified in this section, on the front of each design mix.

C. Mark each mix to identify proportions, gradations, and additives for each class and type of mix submitted. Include applicable test results from samples for each mix. Perform tests and certifications within 12 months of the date of the submittal.

D. Maintain copies of approved mixes at mixing plant.

1.05 CHANGES TO CONTRACT

A. Changes to Contract may be initiated by completing a Request for Information form. Project Manager will provide a response to Contractor by completing the form and returning it to Contractor.

1. If Contractor agrees that the response will result in no increase in cost or time, a Minor Change in the Work will be issued by City Engineer.

2. If Contractor and Project Manager agree that an increase in time or cost is warranted, Project Manager will forward the Request for Proposal for negotiation of a Change Order.

PART 2 P R O D U C T S - Not Used

PART 3 E X E C U T I O N - Not Used

END OF SECTION

Section 01340

SHOP DRAWINGS, PRODUCT DATA, AND SAMPLES

PART 1 G E N E R A L

1.01 SECTION INCLUDES

A. Methods, schedules, and processes to be followed for Shop Drawings, Product Data and Sample submittals.

1.02 REQUIREMENT

A. Submit Shop Drawings, Product Data and Samples as required by Document 00700 - General Conditions and Specification sections, using procedures specified in Section 01330 - Submittal Procedures and the requirements of this Section.

B. Shop Drawings, Product Data and Samples are not considered Contract documents.

1.03 SHOP DRAWING/SUBMITTAL SCHEDULE

A. Submit a separate Shop Drawing submittal schedule at same time the Construction Schedule is submitted. List Products for which Shop Drawings and other submittals are required in the order that they appear in Specifications. Include Product Data and Sample submittals in the schedule. Payment Applications or Certificates for Payment will not be processed until Project Manager has approved the Shop Drawing submittal schedule.

1.04 SHOP DRAWINGS

A. Submit a minimum of seven sets of Shop Drawings and Product Data in a form and quality suitable for microfilming. Review and sign Shop Drawings indicating compliance with the Contract.

B. Place Contractor's Stamp on each drawing as described in Section 01330 - Submittal Procedures.

C. Show the following accurately and distinctly:

1. Field and erection dimensions;

2. Arrangement and section views;

3. Relation to adjacent materials or structure, including complete information for making connections between the Work and work under other contracts;

4. Types of Products and finishes;

5. Parts list and descriptions;

6. Assembly drawings of equipment components and accessories showing respective positions and relationships to the complete equipment package;

7. Identify details by referencing drawing sheet and detail numbers, schedule or room numbers as shown on the Contract drawings, where necessary for clarity.

D. Scale drawings to provide a true representation of the specific equipment or item Furnished.

E. Coordinate and submit components, necessary for Project Manager to adequately review submittal, as a complete package. Reproduction of the Drawings for use in Shop Drawings is not allowed.

F. For major changes to original documents, submit Computer-Aided Design (CAD) drawings on a media acceptable to Project Manager.

1.05 PRODUCT DATA

A. Submit Product Data for review as required in Specifications.

B. Place Contractor's stamp, on each data item submitted, as described in Section 01330 - Submittal Procedures.

C. Mark each copy to identify applicable Products, models, and options to be used in the Work. Where required by Specifications, supplement manufacturers' standard data to provide information unique to the Work.

D. Give manufacturers, trade name, model or catalog designation and applicable reference standard for Products specified only by reference standards.

E. Pre-approved and Pre-qualified Products.

1. For "pre-approved", "pre-qualified" and "approved" Products named in the City standard products list, provide an appropriate list designation,

as described in Section 01630 - Product Substitution Procedures, within 30 days after Notice to Proceed.

2. For Products proposed as alternates to "approved" products, provide information required to demonstrate that the proposed Products meet the level of quality and performance criteria of the "approved" product.

1.06 SAMPLES

A. Submit Samples for review as required by Specifications. Have Samples reviewed and signed by a Registered Professional.

B. Place Contractor's stamp on each Sample or firmly attach a sheet of paper with Contractor's stamp, as described in Section 01330 - Submittal Procedures.

C. Submit the number of Samples specified in Specifications; Project Manager will retain one.

D. Reviewed Samples that may be used in the Work are identified in Specifications.

PART 2 P R O D U C T S - Not Used

PART 3 E X E C U T I O N - Not Used

END OF SECTION

Section 01410

TPDES REQUIREMENTS

1.01 SECTION INCLUDES

A. Documentation to be prepared and signed by Contractor/Operator before conducting construction operations, in accordance with the Texas Pollutant Discharge Elimination System (TPDES) Construction General Permit Number TXR 150000 issued February 15, 2008 (the Construction General Permit).

B. Implementation, maintenance inspection, and termination of storm water pollution prevention control measures including, but not limited to, erosion and sediment controls, storm water management plans, waste collection and disposal, off-site vehicle tracking, and other appropriate practices shown on the Drawings or specified elsewhere in the Contract.

C. Review of the Storm Water Pollution Prevention Plan (SWP3) implementation in a meeting with Project Manager prior to start of construction.

1.02 DEFINITIONS

A. Commencement of Construction Activities: The exposure of soil resulting from activities such as clearing, grading, and excavation activities, as well as other construction related activities (e.g., stock piling of fill material, demolition).

B. Large Construction Activity: Project that:o

1. disturbs five acres or more, or

2. disturbs less than five acres but is part of a larger common plan of development that will disturb five acres or more of land.

C. Small Construction Activity: Project that:

1. disturbs one or more acres but less than five acres, or

2. disturbs less than one acre but is part of a larger common plan of development that will ultimately disturb one or more acres but less than five acres.

D. TPDES Operator:

Operator - The person or persons associated with a large or small construction activity that is either a primary or secondary as defined below:

Primary Operator – the person or persons associated with a large or small construction activity that meets either of the following two criteria:

(a) the persons have operational control over construction plans and specifications, including the ability to make modifications to those plans and specifications; or

(b) the person or persons have day-to-day operational control of those activities at a construction site that are necessary to ensure compliance with a storm water pollution prevention plan (SWP3) for the site or other permit conditions (e.g., they are authorized to direct workers at a site to carry out activities required by the SWP3 or comply with other permit conditions).

Secondary Operator – The person whose operational control is limited to the employment of other operators or to the ability to approve or disapprove changes to plans and specifications. A secondary operator is also defined as a primary operators if there are no other operators if there are no other operators at the construction site.

PART 2 P R O D U C T S - Not Used

PART 3 E X E C U T I O N

3.01 SITE SPECIFIC STORM WATER POLLUTION PREVENTION PLAN (SWP3)

A. Prepare a SWP3 following Part III of the Construction General Permit and the Storm Water Management Handbook for Construction Activities issued under City Ordinance Section 47-695(b). If conflicts exist between the Construction General Permit and the handbook, the more stringent requirements will apply.

B. Update or revise the SWP3 as needed during the construction following Part III, Section E of the Construction General Permit.

C. Submit the SWP3 and any updates or revisions to Project Manager for review and address comments prior to commencing, or continuing, construction activities.

3.02 NOTICE OF INTENT For Large Construction Activity

A. Fill out, sign, and date TCEQ Form 20022 (03/05/2008) Notice of Intent (NOI) for Storm Water Discharges Associated with Construction Activity under the TPDES Construction General Permit (TXR 150000), **ATTACHMENT 1** of this Section 01410.

B. Transmit the signed Contractor's copy of TCEQ Form 20022 (03/05/2008), along with a $325.00 check, made out to Texas Commission on Environmental Quality, and the completed Payment Submittal Form to Project Manager.

C. Project Manager will complete a separate TCEQ Form 20022 (03/05/2008) for City's Notice of Intent, and will submit both Notices, along with checks for application fees, to the TCEQ.

D. Submission of the Notice of Intent form by both the City and Contractor to TCEQ if mailing is required a minimum of seven days before Commencement of Construction Activities.

3.03 CONSTRUCTION SITE NOTICE FOR SMALL CONSTRUCTION ACTIVITY

A. Fill out, sign, and date the Construction Site Notice, Attachment 2 to TPDES General Permit TXR 150000, "Construction Site Notice", **ATTACHMENT 2** of this Section 01410.

B. Transmit the signed Construction Site Notice to Project Manager at least seven days prior to Commencement of Construction Activity.

3.04 CERTIFICATION REQUIREMENTS

A. Fill out TPDES Operator's Information form, **ATTACHMENT 3** of this Section 01410, including Contractor's name, address, and telephone number, and the names of persons or firms responsible for maintenance and inspection of erosion and sediment control measures. Use multiple copies as required to document full information.

B. Contractor and Subcontractors shall sign and date the Contractor's / Subcontractor's Certification for TPDES Permitting, **ATTACHMENT 4** of this Section 01410. Include this certification with other Project certification forms.

C. Submit properly completed certification forms to Project Manager for review before beginning construction operations.

D. Conduct inspections in accordance with TCEQ requirements. Ensure persons or firms responsible for maintenance and inspection of erosion and sediment control measures read, fill out, sign, and date the Erosion Control Contractor's Certification for Inspection and Maintenance. Use the City of Houston Storm Water Pollution Prevention Plan, Construction Site Inspection Report, **ATTACHMENT 5** of this Section 01410 to record maintenance inspections and repairs.

3.05 RETENTION OF RECORDS

A. Keep a copy of this document and the SWP3 in a readily accessible location at the construction site from Commencement of Construction Activity until submission of the Notice of Termination (NOT) for Storm Water Discharges Associated with Construction Activity under TPDES Construction General Permit (TXR 150000). Contractors with day-to-day operational control over SWP3 implementation shall have a copy of the SWP3 available at a central location, on-site, for the use of all operators and those identified as having responsibilities under the SWP3. Upon submission of the NOT, submit all required forms and a copy of the SWP3 with all revisions to Project Manager.

3.06 REQUIRED NOTICES

A. Post the following notices from effective date of the SWP3 until date of final site stabilization as defined in the Construction General Permit:

1. Post the TPDES permit number for Large Construction Activity, with a signed TCEQ Construction Site Notice for large or Small Construction Activity. Signed copies of the City's and Contractor's NOI must also be posted.

2. Post notices near the main entrance of the construction site in a prominent place where it is safely and readily available for viewing by General Public, Local, State, and Federal Authorities. Post name and telephone number of Contractor's local contact person, brief project description and location of the SWP3.

    a. If posting near a main entrance is not feasible due to safety concerns, coordinate posting of notice with Project Manager to conform to requirements of the Construction General Permit.

    b. If Project is a linear construction project (e.g.: road, utilities, etc.), post notice in a publicly accessible location near active construction. Move notice as necessary.

3. Post a notice to equipment and vehicles operators, instructing them to stop, check, and clean tires of debris and mud before driving onto traffic lanes. Post at each stabilized construction access area.

4. Post a notice of waste disposal procedures in a readily visible location on site.

3.07 ON-SITE WASTE MATERIAL STORAGE

A. On-site waste material storage shall be self-contained and shall satisfy appropriate local, state, and federal rules and regulations.

B. Prepare list of waste material to be stored on-site. Update list as necessary to include up-to-date information. Keep a copy of updated list with the SWP3.

C. Prepare description of controls to reduce pollutants generated from on-site storage. Include storage practices necessary to minimize exposure of materials to storm water, and spill prevention and response measures consistent with best management practices. Keep a copy of the description with the SWP3.

3.08 NOTICE OF TERMINATION

A. Submit a NOT, **ATTACHMENT 7** of this Section 01410, to Project Manager within 30 days after:

1. Final stabilization has been achieved on all portions of the site that are the responsibility of the Contractor; or

2. Another operator has assumed control over all areas of the site that have not been stabilized; and

3. All silt fences and other temporary erosion controls have either been removed, scheduled to be removed as defined in the SWP3, or transferred to a new operator if the new operator has sought permit coverage.

B. Project Manager will complete City's NOT and submit Contractor and City's notices to the TCEQ and MS4 entities.

END OF SECTION

PAGE LEFT INTENTIONALLY BLANK

ATTACHMENT 1

Notice of Intent (NOI) for Storm Water Discharges Associated with Construction Activity under the TPDES Construction General Permit (TXR150000)

For help completing this application, read the TXR150000 NOI Instructions (TCEQ-20022-Instructions).

TCEQ Office Use Only
TPDES Permit Number: TXR15|__|__|__|__|__| - NO
GIN Number: |__|__|__|__|__|__|__|__|

A. Construction Site Operator ☐New ☐No Change Customer Reference Number: CN_____
Name:_____
Mailing Address:_____ City:_____ State:____ Zip Code:_____
Country Mailing Information (*if outside USA*) Territory:_____ Country Code:_____ Postal Code:_____
Phone Number:_____ Extension:_____ Fax Number:_____
E-mail Address:_____
Type of Operator: ☐ Individual ☐ Sole Proprietorship - D.B.A. ☐ Partnership ☐ Corporation ☐ Federal Government
☐ State Government ☐ County Government ☐ City Government ☐ Other:_____
Independent Operator? ☐ Yes ☐ No Number of Employees: ☐ 0-20 ☐ 21-100 ☐ 101-250 ☐ 251-500 ☐ 501 or higher
Federal Tax ID:_____ State Franchise Tax ID Number:_____ DUNS Number:_____

B. Billing Address
Name:_____
Mailing Address:_____ City:_____ State:____ Zip Code:_____
Country Mailing Information (*if outside USA*) Territory:_____ Country Code:_____ Postal Code:_____

C. Project / Site Information ☐New ☐No Change Regulated Entity Reference Number: RN_____
Name:_____
Mailing Address:_____ City:_____ State:____ Zip Code:_____
Physical Address:_____ City:_____ County:_____ Zip Code:_____
Location Access Description:_____
Latitude:___°___'___" N Longitude:___°___'___" W Degrees (°), Minutes ('), and Seconds (")
Latitude:_____ Longitude: -_____ Decimal Form
Standard Industrial Classification (SIC) code:_____ Also, describe the construction activity at this site (*do not repeat the SIC code*):
_____
Has a storm water pollution prevention plan been prepared as specified in the general permit (TXR150000)? ☐ Yes ☐ No
Estimated area of land disturbed (to the nearest acre):_____ Is the project / site located on Indian Country Lands? ☐ Yes ☐ No
Does this project / site discharge storm water into a municipal separate storm sewer system (MS4)? ☐ Yes ☐ No
If yes, provide the name of the MS4 operator:_____
Provide the name or segment number of the water body that receives storm water from this project / site:_____

D. Contact - If the TCEQ needs additional information regarding this application, who should be contacted?
Name:_____ Title:_____
Phone Number:_____ Extension:_____ Fax Number:_____
E-mail Address:_____

E. Payment Information - Check / Money Order Number:_____ Name on Check / Money Order:_____

F. Certification
I certify under penalty of law that this document was prepared under my direction or supervision in accordance with a system designed to assure that qualified personnel properly gather and evaluate the information submitted. Based on my inquiry of the person or persons who manage the system, or those persons directly responsible for gathering the information, the information submitted is, to the best of my knowledge and belief, true, accurate, and complete. I am aware there are significant penalties for submitting false information, including the possibility of fine and imprisonment for knowing violations.

Construction Site Operator:
Prefix:_____ First:_____ Middle:_____
Last:_____ Suffix:_____ Title:_____
Signature:_____ Date:_____

If you have questions on how to fill out this form or about the storm water program, please contact us at (512) 239-4671.
Individuals are entitled to request and review their personal information that the agency gathers on its forms. They may also have any errors in their information corrected. To review such information, contact us at (512) 239-3282.

The completed NOI must be mailed to the following address. Use the attached document to submit the $100 application fee. Please note that the NOI and application fee are submitted separately to different addresses.

Texas Commission on Environmental Quality
Storm Water & General Permits Team; MC - 228
P.O. Box 13087
Austin, Texas 78711-3087

TCEQ-20022 (05/03) **Page 1 of 2**

ATTACHMENT 1

Texas Commission on Environmental Quality
Payment Submittal Form

The storm water application fee shall be sent under separate cover to the Texas Commission on Environmental Quality.

This form must be used to submit your Storm Water Application Fee. Please complete the following information, staple your check in the space provided at the bottom of this document, and mail it to:

BY REGULAR U.S. MAIL

Texas Commission on Environmental Quality
Financial Administration Division
Cashier's Office, MC-214
P.O. Box 13088
Austin, TX 78711-3088

BY OVERNIGHT/EXPRESS MAIL

Texas Commission on Environmental Quality
Financial Administration Division
Cashier's Office, MC-214
12100 Park 35 Circle
Austin, TX 78753

Fee Code: GPA

Storm Water General Permit: TXR150000

Check / Money Order No: _____ Amount of Check/Money Order: _____

Date of Check or Money Order: _____

Name on Check or Money Order: _____

Facility / Site Name: _____

Facility / Site Physical Address: _____

City: _____ Zip Code: _____

Staple Check In This Space

ATTACHMENT 1

Completing the Notice of Intent for Storm Water Discharges Associated with Construction Activity under the TPDES Construction General Permit (TXR150000)

A. Construction Site Operator Information

Check boxes and Customer Reference Number
These boxes designate the operator's status as a TCEQ "customer"—in other words, an individual or business that is involved in an activity that we regulate. We assign each customer a number that begins with "CN," followed by nine digits. ***This is not a permit number, registration number, or license number.*** In the remainder of this section, we will use "this customer" to mean the operator for Part A of the form.

- If this customer has not been assigned a Customer Reference Number or if this number is unknown, check "New" and leave the space for the Customer Reference Number blank.
- If this customer has already been assigned this number, enter the operator's Customer Reference Number and:
  - Check "No Change" if all the remaining customer information is the same as previously reported. However, you must still complete most blanks in this form for this notice of intent to be valid.
  - If this customer's information has changed since the last time it was reported to the TCEQ, check neither box and complete the remainder of this notice of intent.
- ***Do not enter a permit number, registration number, or license number in place of the Customer Reference Number.***

Name
Enter the legal name of this customer as authorized to do business in Texas. Include any abbreviations (LLC, Inc., etc.).

Mailing Address
Enter a central and general mailing address for this customer to receive mail from the TCEQ. For example, if this customer is a large company, this address might be the corporate or regional headquarters. On the other hand, for a smaller business, this address could be the same as the site address.

If this is a street address, please follow US Postal Service standards. In brief, these standards require this information in this order:

- the "house" number—for example, the 1401 in 1401 Main St
- if there is a direction before the street name, the one- or two-letter abbreviation of that direction (N, S, E, W, NE, SE, SW, or NW)
- the street name (if a numbered street, do not spell out the number—for example, 6th St, not Sixth St)
- an appropriate abbreviation of the type of street—for example, St, Ave, Blvd, Fwy, Exwy, Hwy, Cr, Ct, Ln
- if there is a direction after the street name, the one- or two-letter abbreviation of that direction (N, S, E, W, NE, SE, SW, or NW)
- if there is a room number, suite number, or company mail code

City, State, *and* ZIP Code
Enter the name of the city, the two-letter USPS abbreviation for the state (for example, TX), and the ZIP Code. (Enter the full ZIP+4 if you know it.)

Country Mailing Information
If this address is ***outside*** the United States, enter the territory name, country code, and any non-ZIP mailing codes or other non–U.S. Postal Service features here. If this address is ***inside*** the United States, leave these spaces blank.

Phone Number *and* Extension
This number should correspond to this customer's mailing address given earlier. Enter the area code and phone number here. Leave "Extension" blank if this customer's phone system lacks this feature.

Fax Number
This number should correspond to this customer's mailing address given earlier. Enter the area code and fax number here.

E-mail Address
As with the mailing address, this should be a general address that is appropriate for e-mail to this customer's central or regional headquarters, if applicable.

If "No Change" was checked for this customer, you may skip the rest of the fields in this part of the form and continue to the next part of the NOI.

Type of Operator
Check ***only one*** box.

Check ...	*if this customer ...*
Individual	is a person and has not established a business to do whatever causes them to be regulated by us.
Sole Proprietorship—D.B.A.	is a business that is owned by only one person and has not been incorporated. This business may: • be under the person's name • have its own name ("doing business as," or d.b.a.) • have any number of employees
Partnership	is a business that is established as a partnership as defined by the Texas Secretary of State's Office.
Corporation	meets all of these conditions: • is a legally incorporated entity under the laws of any state or country • is recognized as a corporation by the Texas Secretary of State • has proper operating authority to operate in Texas
Federal, state, county, or city government (as appropriate)	is either an agency of one of these levels of government or the governmental body itself (If a utility district, water district, tribal government, college district, council of governments, or river authority, check "Other" and write in the specific type of government.)
Other	fits none of the above descriptions. Enter a short description of the type of customer in the blank provided.

Independent Operator?
Check "No" if this customer is a subsidiary or part of a larger company. Otherwise, check "Yes."

Number of Employees
Check one box to show the number of employees for this customer's entire company, at all locations. ***This is not necessarily the number of employees at the site named in this NOI.***

Federal Tax ID
All businesses, except for some small sole proprietors, should have a federal taxpayer identification number (TIN). Enter this number here. Use no prefixes, dashes, or hyphens. Individuals and sole proprietors do not need to provide a federal tax ID.

State Franchise Tax ID
Corporations and limited liability companies that operate in Texas are issued a franchise tax identification number. If this customer is a corporation or limited liability company, enter this number here.

DUNS Number
Most businesses have a DUNS (Data Universal Numbering System) number issued by Dun and Bradstreet Corp. If this customer has one, enter it here.

B. Billing Address

We will mail the annual fee invoice for this site to the address entered in this section.

Name
Enter the legal name of the person or business to which we should mail this site's fee invoice each year.

Mailing Address
Enter the specific mailing address to which we should mail this site's fee invoice each year. If this is a street address, please follow the US Postal Service standards as described under "A. Construction Site Operator Information" on page 1 of these instructions.

City, State, *and* ZIP Code
Enter the name of the city, the two-letter USPS abbreviation for the state (for example, TX), and the ZIP Code. (Enter the full ZIP+4 if you know it.)

Country Mailing Information
If this address is ***outside*** the United States, enter the territory name, country code, and any non-ZIP mailing codes or other non–U.S. Postal

ATTACHMENT 1

Service features here. If this address is ***inside*** the United States, leave these spaces blank.

C. Project / Site Information

Check boxes *and* Regulated Entity Reference Number
These boxes designate this site's status as a TCEQ "regulated entity"—in other words, a location where an activity that we regulate occurs. We assign each regulated entity a number that begins with "RN," followed by nine digits. ***This is not a permit number, registration number, or license number.***

- If this site has not been assigned a Regulated Entity Reference Number or if this number is unknown, check "New" and leave the space for the Regulated Entity Reference Number blank.
- If this site has already been assigned this number, enter the Regulated Entity Reference Number and:
  - Check "No Change" if all the remaining information is the same as previously reported. However, even if there has been no change, you must complete this section at least through "E-mail Address" for this NOI to be valid.
  - If this site's information has changed since the last time it was reported to the TCEQ, check neither box and complete the remainder of this notice of intent.
- ***Do not enter a permit number, registration number, or license number in place of the Regulated Entity Reference Number.***

Name
Enter the name by which you want this site to be known to the TCEQ.

Mailing Address
Enter the specific mailing address for this site. If this is a street address, please follow the US Postal Service standards as described under "A. Construction Site Operator Information" on page 1 of these instructions. If the project / site's mailing address is the same as what is provided in Section A, you may enter "Same as Section A".

City, State, *and* ZIP Code
Enter the name of the city, the two-letter USPS abbreviation for the state (for example, TX), and the ZIP Code. (Enter the full ZIP+4 if you know it.)

Physical Address
Enter the physical address of the site itself. TCEQ staff should be able to use this address to find the site. Please follow the US Postal Service standards as described under "A. Construction Site Operator Information" on page 1 of these instructions. If the project / site does not have a physical address, enter "No Address".

City, County, *and* ZIP Code
Enter the name of the city, the county, and the ZIP Code. (Enter the full ZIP+4 if you know it.) This information must be provided even if you have entered "No Address" in the previous field.

Location Access Description
Enter a physical description of the location of the site based on highway intersections and/or permanent landmarks.

Latitude *and* Longitude
Enter the latitude and longitude of the site in ***either*** degrees, minutes, and seconds ***or*** decimal form.

For help obtaining the latitude and longitude, go to:
http://www.tnrcc.state.tx.us/gis/drgview.html

Standard Industrial Classification (SIC) Code and Activity Description

Provide the SIC code that best describes the construction activity being conducted at the site.

For help with SIC codes, go to:
http://www.osha.gov/oshstats/sicser.html

In addition to the SIC code, you must also provide a description of the construction activity being conducted at the site. This may include such descriptions as: "Apartment Building Construction" or "Shopping Center Construction."

Storm Water Pollution Prevention Plan
This plan identifies the areas and activities that could produce contaminated runoff at your site and then tells how you will ensure that this contamination is mitigated. For example, in describing your mitigation measures, your site's plan might identify the devices that collect and filter storm water, tell how those devices are to be maintained, and tell how frequently that maintenance is to be carried out. ***You must develop this plan before you complete this NOI.*** This plan must be available for a TCEQ investigator to review on request. Specific requirements for the development of the plan can be found in the *Texas Pollutant Discharge Elimination System Construction General Permit (TXR150000)*.

Estimated Area of Land Disturbed
Provide the approximate number of acres that the construction site will disturb. It is appropriate to enter a value less than 5, only if the project is part of a larger common plan that disturbs five or more acres. If the acreage is less than 1, enter 1. "Disturb" means any clearing, grading, excavating, or other similar activities.

Is the site located on Indian Country Lands?
Check "Yes" only if the site is on a reservation or other areas designated by the federal government as Indian Country Lands. If not, check "No."

Destination of Storm Water Discharge
The storm water from your site eventually reaches a receiving water body such as a local stream or lake, possibly via a drainage ditch. The discharge may initially be into a municipal separate storm sewer system (MS4). Check the appropriate boxes for whether storm water is discharged into an MS4. If you checked "Yes" to "An MS4?", then enter the name of the entity that operates the storm sewer—often a city, town, or utility district, but possibly another form of government.

You must also provide the name of the water body that receives the discharge from the construction site (a local stream or lake). Storm water may be discharged directly to a receiving stream or via a storm sewer system. If known, please include the segment number if the discharge is to a classified water body.

For a map that includes segment numbers, go to:
http://www.tnrcc.state.tx.us/water/quality/data/index.html

D. Contact

Give all the relevant information for the person whom TCEQ can contact if there are questions about any of the information on this form—perhaps the same person who completed the form.

E. Payment Information

Provide the number and account holder name from the check or money order used to pay the $100 application fee.

F. Certification

The operator must sign and date this statement to validate this NOI. Be sure to enter the full legal name of the person signing the form and the relevant title—for example, "Operator," "Vice-President," or "Partner." Use the "Prefix" blank for such titles as Dr., Mr., or Ms., as desired. Use the "Suffix" blank for such designations as Ph.D., Jr., Sr., III, or J.D., if applicable.

For a corporation, the application shall be signed by a responsible corporate officer. A responsible corporate officer means a president, secretary, treasurer, or vice-president of the corporation in charge of a principal business function, or any other person who performs similar policy or decision-making functions for the corporation; or the manager of one or more manufacturing, production, or operating facilities employing more than 250 persons or having gross annual sales or expenditures exceeding $25 million (in second-quarter 1980 dollars), if authority to sign documents has been assigned or delegated to the manager in accordance with corporate procedures. Corporate procedures governing authority to sign permit applications may provide for assignment or delegation to applicable corporate positions rather than to specific individuals.

For a partnership or sole proprietorship, the application shall be signed by a general partner or the proprietor, respectively.

For a municipality, state, federal, or other public agency, the application shall be signed by either a principal executive officer or a ranking elected official. For purposes of this application, a principal executive officer of a federal agency includes the chief executive officer of the agency, or a senior executive officer having responsibility for the overall operations of a principal geographic unit of the agency (e.g. regional administrator of the United States Environmental Protection Agency).

Questions?

If you have questions about any of the information on this form, contact our Storm Water Program at 512/239-4671 or look for "Storm Water" on our Web site:

www.tceq.state.tx.us

ATTACHMENT 2

CONSTRUCTION SITE NOTICE

FOR THE
Texas Commission on Environmental Quality (TCEQ)
Storm Water Program
TPDES GENERAL PERMIT TXR150000

The following information is posted in compliance with **Part II.D.2.** of the TCEQ General Permit Number TXR150000 for discharges of storm water runoff from construction sites. Additional information regarding the TCEQ storm water permit program may be found on the internet at:
www.tnrcc.state.tx.us/permitting/waterperm/wwperm/tpdestorm

Contact Name and Phone Number:	
Project Description: (Physical address or description of the site's location, estimated start date and projected end date, or date that disturbed soils will be stabilized)	
Location of Storm Water Pollution Prevention Plan :	

For Construction Sites Authorized Under Part II.D.2. (Obtaining Authorization to Discharge) the following certification must be completed:

I _____ (Typed or Printed Name Person Completing This Certification) certify under penalty of law that I have read and understand the eligibility requirements for claiming an authorization under Part II.D.2. of TPDES General Permit TXR150000 and agree to comply with the terms of this permit. A storm water pollution prevention plan has been developed and implemented according to permit requirements. A copy of this signed notice is supplied to the operator of the MS4 if discharges enter an MS4 system. I am aware there are significant penalties for providing false information or for conducting unauthorized discharges, including the possibility of fine and imprisonment for knowing violations.

_____ _____
Signature and Title Date

PAGE LEFT INTENTIONALLY BLANK

ATTACHMENT 3

TPDES OPERATOR'S INFORMATION

Owner's Name and Address: City of Houston

Mr. _____
(City Official)

_____
(Department)
P. O. Box 1562
Houston, Texas 77251-1562
(713) 247-1000

Contractors' Names and Addresses:

General Contractor: _____
_____
_____
_____
Telephone: _____

Site Superintendent: _____
_____
_____
_____
Telephone: _____

Erosion Control and
Maintenance Inspection: _____
_____
_____
_____
Telephone: _____

Subcontractors' Names and Addresses:

_____ _____
_____ _____
_____ _____
_____ _____
Phone: _____ Phone: _____

Note: Insert name, address, and telephone number of person or firms

PAGE LEFT INTENTIONALLY BLANK

ATTACHMENT 4

CONTRACTOR'S / SUBCONTRACTOR'S

CERTIFICATION FOR TPDES PERMITTING

I certify under penalty of law that I understand the terms and conditions of TPDES General Permit No. TXR150000 and the Storm Water Pollution Prevention Plan for the construction site identified as part of this certification.

Signature: _____

Name: (printed or typed) _____

Title: _____

Company: _____

Address: _____

Date: _____

Signature: _____

Name: (printed or typed) _____

Title: _____

Company: _____

Address: _____

Date: _____

Signature: _____

Name: (printed or typed) _____

Title: _____

Company: _____

Address: _____

Date: _____

PAGE LEFT INTENTIONALLY BLANK

ATTACHMENT 5

EPA NPDES Construction Inspection Form

The following inspection is being performed in compliance with Part IV.D.4. of the NPDES Region 6 Storm Water Construction General Permit [63 Fed. Reg. 36502] and being retained in accordance with Part V of the Permit. Qualified personnel (provided by the permittee or cooperatively by multiple permittees) shall inspect disturbed areas of the construction site that have not been finally stabilized, areas used for storage of materials that are exposed to precipitation, placement and effectiveness of structural control measures, and locations where vehicles enter or exit the site. Inspections shall be performed at least once every 14 days and within 24 hours of the end of a storm event of 0.5 inches or greater. Where sites have been temporarily stabilized, runoff is unlikely due to winter conditions, or during seasonal arid periods in arid areas (0-10 inches of rainfall annually) and semi-arid areas (10-20 inches annually) such inspections shall be conducted at least once every month. This form is primarily intended for use with construction projects in Texas and New Mexico. Permittees on Indian Country lands in Oklahoma, Louisiana and Arkansas and some oil and gas facilities in Oklahoma may use this form if they are eligible for this permit. Other facilities need to check with their NPDES authority before using this form.

If you do not know your NPDES Permit Number, contact the NOI Processing Center at (301)495-4145. This form was prepared as an example and it is not a required form for use with the permit. Alternative forms may be used if they contain all of the required information as set forth in the permit. This form and additional information regarding the NPDES Region 6 storm water program may be found on the Internet at http://www.epa.gov/region6/sw/. Any person with a complaint about the operation of this facility in regards to this permit should contact EPA Region 6 at (214)665-7112.

Permit Number(s) covered by this inspection (e.g. owners, developers, general contractor, builders)	
Signature and Certification in accordance with Part VI.G of the permit:	I certify under penalty of law that this document and all attachments were prepared under my direction or supervision in accordance with a system designed to assure that qualified personnel properly gathered and evaluated the information submitted. Based on my inquiry of the person or persons who manage the system, or those persons directly responsible for gathering the information, the information submitted is, to the best of my knowledge and belief, true, accurate, and complete. I am aware that there are significant penalties for submitting false information, including the possibility of fine and imprisonment for knowing violations. Signature_____ Date_____
Date of Inspection	
Inspector Name	
Is there a copy of the permit language with the SWPPP?	❒ YES ❒ NO
Is the inspector qualified and are the qualifications documented in the SWPPP?	❒ YES ❒ NO
Is an NPDES storm water construction sign posted at the entrance for all permittees?	❒ YES ❒ NO

You may want to use EPA Region 6 construction checklist to assure components of the SWPPP are complete. This form, the construction sign, and the checklist are available on the Region 6 NPDES Storm Water Forms and Documents web page which may be found on the internet at http://www.epa.gov/earth1r6/6en/w/formsw.htm In addition to the checklist, you should provide a narrative (see next page) on the existing Best Management Practices and Structural Controls found during each inspection. Any problems identified in an inspection should be corrected within 7 days. The inspection should cover all components of the SWPPP and all potential pollutants. While eroded soil is the primary pollutant of concern, do not forget to inspect for other pollutant sources such as fuel tanks, paints, solvents, stabilization materials, concrete hardner, batch plants, and construction debris. The inspector will need to update the SWPPP to reflect findings of the inspection. The site map should be updated after an inspection to show controls that have been added or removed, to ensure the site map is kept current in accordance with Part IV.C. of the permit.

Revision 4, March 1, 2000

ATTACHMENT 5

Narrative Findings of the inspection:

Observations should include any findings of Best Management Practices or controls that are not in accordance with the SWPPP. If a control is not in place or failed, observe the reason why. A control removed temporarily for work is not necessarily a violation if properly recorded in the SWPPP. If it has been removed, record why it was removed and, if applicable, when it will be reinstalled. If the control has failed, observe the conditions so a conclusion may be made as to wether the control failed for improper maintenance or improper design. The qualified inspector will know when a failed control is inadequate and should be replaced by an improved control mechanism. Qualified inspectors are to have authority to make changes to the SWPPP to assure compliance. Controls that have not been installed should be given a reason why they are not installed and/or a scheduled date for installation if they are designed for a later phase of construction. After the inspection, the SWPPP and its site map should be updated to reflect current conditions of controls and Best Management Practices at the time of the inspection. This includes removing uninstalled controls from the site map or otherwise denoting on the site map if they are no longer installed if the controls have been removed because they are no longer necessary (e.g. stabilization has been achieved in that area).

ATTACHMENT 6

City of Houston

Storm Water Pollution Prevention Plan
Construction Site Inspection Report

TPDES/EPA Permit Number _____

COH Storm Water Quality Permit Number _____

DATE _____

No exceptions noted.

The following must be corrected prior to continuing work:

Public Notice improperly posted

Initial Construction Site Inspection Report information requires updating

Copy of NOI not on site

Storm water pollution prevention plan not on site

Erosion and sediment controls improperly installed

Erosion and sediment control devices improperly maintained

Fueling or washout areas not properly protected

Portocan or other sanitary facilities not properly protected

Self-inspection and maintenance records incomplete

Sediment from site outside area of construction

Other (see description below)

_____

_____

Please contact the Storm Water Quality Engineer at
611 Walker, RA-257, Houston TX 77002
713-837-7383 fax 713-837-0570

Once the above items have been corrected, call to arrange for reinspection. No further inspections for any construction related activity shall be made until the above items have been corrected.

_____	_____
Inspector's Signature	Contractor's Signature
_____	_____
Inspector's Name	Contractor's Name

not present

Distribution Stormwater Quality Engineer, Code Enforcement, Inspector, Operator
(Operator is Contractor) Form _____ (10-01-01)

PAGE LEFT INTENTIONALLY BLANK

ATTACHMENT 7

Notice of Termination (NOT) for Storm Water Discharges Associated with Construction Activity under the TPDES Construction General Permit (TXR150000)

TCEQ Office Use Only
TPDES Permit Number: TXR15__|__|__|__|__| - NO
GIN Number: __|__ __|__ __|__|__|

For help completing this application, read the TXR150000 NOI Instructions (TCEQ-20023-Instructions).

A. TPDES Permit Number: TXR15_____

B. Construction Site Operator Customer Reference Number: CN_____
Name:_____
Mailing Address:_____
City:_____ State: -- Zip Code:_____
Country Mailing Information (*if outside USA*) Territory:_____ Country Code:_____ Postal Code:_____
Phone Number:_____ Extension:_____ Fax Number:_____
E-mail Address:_____

C. Project / Site Information Regulated Entity Reference Number: RN_____
Name:_____
Physical Address:_____
Location Access Description:_____
City:_____ County: --_____ Zip Code:_____

D. Contact - If the TCEQ needs additional information regarding this termination, who should be contacted?
Name:_____ Title:_____
Phone Number:_____ Extension:_____ Fax Number:_____
E-mail Address:_____

E. Certification

I certify under penalty of law that authorization under the TPDES Construction General Permit (TXR150000) is no longer necessary based on the provisions of the general permit. I understand that by submitting this Notice of Termination, I am no longer authorized to discharge storm water associated with construction activity under the general permit TXR150000, and that discharging pollutants in storm water associated with construction activity to waters of the U.S. is unlawful under the Clean Water Act where the discharge is not authorized by a TPDES permit. I also understand that the submittal of this Notice of Termination does not release an operator from liability for any violations of this permit or the Clean Water Act.

Construction Site Operator Representative:

Prefix:_____ First:_____ Middle:_____
Last:_____ Suffix:_____
Title:_____

Signature:_____ Date:_____

If you have questions on how to fill out this form or about the storm water program, please contact us at (512) 239-4671. Individuals are entitled to request and review their personal information that the agency gathers on its forms. They may also have any errors in their information corrected. To review such information, contact us at (512) 239-3282.

The completed NOT must be mailed to the following address:

Texas Commission on Environmental Quality
Storm Water & General Permits Team; MC - 228
P.O. Box 13087
Austin, Texas 78711-3087

TCEQ - 20023 (02/03) **Page 1 of 1**

PAGE LEFT INTENTIONALLY BLANK

ATTACHMENT 7

Completing the Notice of Termination for Storm Water Discharges Associated with Construction Activity under the TPDES Construction General Permit (TXR150000)

Who May File a Notice of Termination (NOT) Form
Permittees disturbing 5 acres or more (or part of a larger common plan of development or sale disturbing 5 acres or more) who are presently covered under the Texas Pollutant Discharge Elimination System (TPDES) Construction General Permit must submit a Notice of Termination (NOT) when final stabilization has been achieved on all portions of the site that is the responsibility of the permittee; or another permitted operator has assumed control over all areas of the site that have not been finally stabilized and all silt fences and other temporary erosion controls have either been removed, scheduled for removal as defined in the SWP3, or transferred to a new operator if the new operator has sought permit coverage. Erosion controls that are designed to remain in place for an indefinite period, such as mulches and fiber mats, are not required to be removed or scheduled for removal.

Final Stabilization occurs when either of the following conditions are met:

(a) All soil disturbing activities at the site have been completed and a uniform (e.g, evenly distributed, without large bare areas) perennial vegetative cover with a density of 70% of the native background vegetative cover for the area has been established on all unpaved areas and areas not covered by permanent structures, or equivalent permanent stabilization measures (such as the use of riprap, gabions, or goetextiles) have been employed.

(b) For individual lots in a residential construction site by either:

(1) the homebuilder completing final stabilization as specified in condition (a) above; or

(2) the homebuilder establishing temporary stabilization for an individual lot prior to the time of transfer of the ownership of the home to the buyer and after informing the homeowner of the need for, and benefits of, final stabilization.

(c) For construction activities on land used for agricultural purposes (e.g. pipelines across crop or range land), final stabilization may be accomplished by returning the disturbed land to its preconstruction agricultural use. Areas disturbed that were not previously used for agricultural activities, such as buffer strips immediately adjacent to a surface water and areas which are not being returned to their preconstruction agricultural use must meet the final stabilization conditions of condition (a) above.

A. TPDES Permit Number
Provide the TPDES permit number assigned to the operator of the construction site.

B. Construction Site Operator Information
Customer Reference Number
This number designates the operator's status as a TCEQ "customer"—in other words, an individual or business that is involved in an activity that we regulate. We assign each customer a number that begins with "CN," followed by nine digits. ***This is not a permit number, registration number, or license number.*** In the remainder of this section, we will use "this customer" to mean the operator for Part B of the form.

- If this customer has not been assigned a Customer Reference Number, leave the space for the Customer Reference Number blank.
- If this customer has already been assigned this number, enter the operator's Customer Reference Number.
- ***Do not enter a permit number, registration number, or license number in place of the Customer Reference Number.***

Name
Enter the legal name of this customer as authorized to do business in Texas. Include any abbreviations (LLC, Inc., etc.).

Mailing Address
Enter a central and general mailing address for this customer to receive mail from the TCEQ. For example, if this customer is a large company, this address might be the corporate or regional headquarters. On the other hand, for a smaller business, this address could be the same as the site address.

If this is a street address, please follow US Postal Service standards. In brief, these standards require this information in this order:

- the "house" number—for example, the 1401 in 1401 Main St
- if there is a direction before the street name, the one- or two-letter abbreviation of that direction (N, S, E, W, NE, SE, SW, or NW)
- the street name (if a numbered street, do not spell out the number—for example, 6th St, not Sixth St)
- an appropriate abbreviation of the type of street—for example, St, Ave, Blvd, Fwy, Exwy, Hwy, Cr, Ct, Ln
- if there is a direction after the street name, the one- or two-letter abbreviation of that direction (N, S, E, W, NE, SE, SW, or NW)
- if there is a room number, suite number, or company mail code

City, State, *and* ZIP Code
Enter the name of the city, the two-letter USPS abbreviation for the state (for example, TX), and the ZIP Code. (Enter the full ZIP+4 if you know it.)

ATTACHMENT 7

Country Mailing Information
If this address is ***outside*** the United States, enter the territory name, country code, and any non-ZIP mailing codes or other non–U.S. Postal Service features here. If this address is ***inside*** the United States, leave these spaces blank.

Phone Number *and* Extension
This number should correspond to this customer's mailing address given earlier. Enter the area code and phone number here. Leave "Extension" blank if this customer's phone system lacks this feature.

Fax Number
This number should correspond to this customer's mailing address given earlier. Enter the area code and fax number here.

E-mail Address
As with the mailing address, this should be a general address that is appropriate for e-mail to this customer's central or regional headquarters, if applicable.

C. Project / Site Information

Regulated Entity Reference Number
This number designates this site's status as a TCEQ "regulated entity"—in other words, a location where an activity that we regulate occurs. We assign each regulated entity a number that begins with "RN," followed by nine digits. ***This is not a permit number, registration number, or license number.***

- If this site has not been assigned a Regulated Entity Reference Number, leave the space for the Regulated Entity Reference Number blank.
- If this site has already been assigned this number, enter the Regulated Entity Reference Number.
- ***Do not enter a permit number, registration number, or license number in place of the Regulated Entity Reference Number.***

Name
Enter the name by which you want this site to be known to the TCEQ.

Physical Address
Enter the physical address of the site itself. TCEQ staff should be able to use this address to find the site.

Location Description
Enter a physical description of the location of the site based on highway intersections and/or permanent landmarks.

City, County, *and* ZIP Code
Enter the name of the city, the county, and the ZIP Code. (Enter the full ZIP+4 if you know it.)

D. Contact

Give all the relevant information for the person whom TCEQ can contact if there are questions about any of the information on this form—perhaps the same person who completed the form.

E. Certification

The operator must sign and date this statement to validate this NOI. Be sure to enter the full legal name of the person signing the form and the relevant title—for example, "Operator," "Operator's attorney," or "Senior Site Manager." Use the "Prefix" blank for such titles as Dr., Mr., or Ms., as desired. Use the "Suffix" blank for such designations as Ph.D., Jr., Sr., III, or J.D., if applicable.

For a corporation, the application shall be signed by a responsible corporate officer. A responsible corporate officer means a president, secretary, treasurer, or vice-president of the corporation in charge of a principal business function, or any other person who performs similar policy or decision-making functions for the corporation; or the manager of one or more manufacturing, production, or operating facilities employing more than 250 persons or having gross annual sales or expenditures exceeding $25 million (in second-quarter 1980 dollars), if authority to sign documents has been assigned or delegated to the manager in accordance with corporate procedures. Corporate procedures governing authority to sign permit applications may provide for assignment or delegation to applicable corporate positions rather than to specific individuals.

For a partnership or sole proprietorship, the application shall be signed by a general partner or the proprietor, respectively.

For a municipality, state, federal, or other public agency, the application shall be signed by either a principal executive officer or a ranking elected official. For purposes of this application, a principal executive officer of a federal agency includes the chief executive officer of the agency, or a senior executive officer having responsibility for the overall operations of a principal geographic unit of the agency (e.g. regional administrator of the United States Environmental Protection Agency).

Questions?

If you have questions about any of the information on this form, contact our Storm Water Program at 512/239-4671 or look for "Storm Water" on our Web site:
www.tceq.state.tx.us

Section 01422

REFERENCE STANDARDS

PART 1 G E N E R A L

1.01 SECTION INCLUDES

A. Section includes general quality assurance as related to Reference Standards and a list of references.

1.02 QUALITY ASSURANCE

A. For Products or workmanship specified by association, trade, or Federal Standards, comply with requirements of the standard, except when more rigid requirements are specified or are required by applicable codes.

B. Conform to reference standard by date of issue current on the date as stated in the General Conditions.

C. Request clarification from Project Manager before proceeding should specified reference standards conflict with Contract documents.

1.03 SCHEDULE OF REFERENCES

AASHTO	American Association of State Highway and Transportation Officials 444 North Capitol Street, N.W. Washington, DC 20001
ACI	American Concrete Institute P.O. Box 9094 Farmington Hills, MI 48333-9094
AGC	Associated General Contractors of America 333 John Carlyle Street Alexandria, VA 22314
AI	Asphalt Institute Research Park Drive P.O. Box 14052 Lexington, KY 40512

AITC	American Institute of Timber Construction 7012 S. Revere Parkway, Suite 140 Englewood, CO 80112
AISC	American Institute of Steel Construction One East Wacker Dr. Chicago, IL 60601
AISI	American Iron and Steel Institute 1101 17th Street NW, Suite 1300 Washington, DC 20036
ASME	American Society of Mechanical Engineers Three Park Avenue New York, NY 10016
ANSI	American National Standards Institute 1819 L Street NW Sixth Floor Washington, D.C. 20036
APA	American Plywood Association Box 11700 Tacoma, WA 98411
API	American Petroleum Institute 1220 L Street, N.W. Washington, DC 20005
AREA	American Railway Engineering and Maintenance-of-Way-Association 8201 Corporate Drive, Suite 1125 Landover, Maryland 20785
ASTM	American Society for Testing and Materials 100 Barr Harbor Drive West Conshohocken, PA 19428
AWPA	American Wood-Preservers' Association P.O. Box 5690 Granbury, TX 76049
AWS	American Welding Society 550 NW 42nd Avenue Miami, FL 33126

AWWA	American Water Works Association 6666 West Quincy Avenue Denver, CO 80235
COH	City of Houston P.O. Box 1562 Houston, TX 77251-1562
CLFMI	Chain Link Fence Manufacturers Institute 9891 Broken Land Parkway, Suite 300 Columbia, MD 21046
CRSI	Concrete Reinforcing Steel Institute 933 Plum Grove Road Schaumburg, IL 60173-4758
EJMA	Expansion Joint Manufacturers Association 25 North Broadway Tarrytown, NY 10591
FS	Federal Standardization Documents General Services Administration Specifications Unit (WFSIS) 7th and D Streets, S.W. Washington, DC 20406
ICEA	Insulated Cable Engineer Association P.O. Box 440 S. Yarmouth, MA 02664
IEEE	Institute of Electrical and Electronics Engineers 445 Hoes Lane P.O. Box 440 Piscataway, NJ 08855-459
ISA	International Society of Arboriculture P.O. Box 3129 Champaign, IL 61826-3129
MIL	Military Specifications General Services Administration Specifications Unit (WFSIS) 7th and D Streets, S.W. Washington, DC 20406

NACE National Association of Corrosion Engineers
1440 South Creek Drive
Houston, TX 77084-4906

NEMA National Electrical Manufacturers' Association
1300 North 17th Street, Suite 1847
Rosslyn, VA 22209

NFPA National Fire Protection Association
1 Batterymarch Park
P.O. Box 9101
Quincy, MA 02269-9101

OSHA Occupational Safety Health Administration
U.S. Department of Labor
Office of Public Affairs – Room N3647
Washington, DC 20210

PCA Portland Cement Association
5420 Old Orchard Road
Skokie, IL 60077-1083

PCI Prestressed Concrete Institute
209 W. Jackson Blvd.
Chicago, IL 60606

SDI Steel Deck Institute
P.O. Box 25
Fox River Grove, IL 60021

SSPC Society for Protective Coatings (Steel Structures Painting Council)
40 24th Street, Sixth Floor
Pittsburgh, PA 15222

TAC Texas Administrative Code
Texas Water Resources Conservation Commission
P. O. Box 13087
Library MC-196
Austin, TX 78711-3087

TxDOT Texas Department of Transportation
125 East 11th Street
Austin, TX 78701-2483

UL	Underwriters' Laboratories, Inc. 333 Pfingston Road Northbrook, IL 60062
UNI-BELL	UNI-BELL Pipe Association 2655 Villa Creek Drive, Suite 155 Dallas, TX 75234

PART 2 P R O D U C T S - Not Used

PART 3 E X E C U T I O N - Not Used

END OF SECTION

Section 01450

CONTRACTOR'S QUALITY CONTROL

PART 1 G E N E R A L

1.01 SECTION INCLUDES

A. Quality assurance and control of Installation and manufacturers' field services and reports.

1.02 QUALITY ASSURANCE AND CONTROL OF INSTALLATION

A. Monitor quality control over Suppliers, manufacturers, Products, services, site conditions and workmanship, to produce work of specified quality at no additional cost to the City.

B. Comply fully with manufacturers' Installation instructions, including each step in sequence.

C. Request clarification from Project Manager before proceeding when manufacturers' instructions conflict with the Contract.

D. Comply with specified standards as minimum requirements for the Work except when more stringent tolerances, codes, or specified requirements indicate higher standards or more precise workmanship.

E. Perform the Work by persons qualified to produce a specified level of workmanship.

1.03 REFERENCES

A. Obtain copies of standards and maintain at job site when required by individual Specification sections.

1.04 MANUFACTURERS' FIELD SERVICES AND REPORTS

A. When specified in individual Specification sections, or as required by Project Manager, provide Product suppliers' or manufacturers' technical representative to observe site conditions, conditions of surfaces and Installation, quality of workmanship, start-up of equipment, operator training, testing, adjusting and balancing of equipment as applicable and to initiate required operation. Conform to minimum time requirements for start-up operations and operator training when provided in Specification sections.

B. At Project Manager's request, submit qualifications of manufacturers' representative to Project Manager 15 days in advance of required representatives' services. Representative is subject to approval by Project Manager.

C. Manufacturer's representatives shall report observations and site decisions or instructions given to applicators or installers that are supplemental or contrary to a manufacturer's written instructions. Submit report within 14 days of observation to Project Manager for review.

PART 2 P R O D U C T S - Not Used

PART 3 E X E C U T I O N - Not Used

END OF SECTION

SECTION 01452 (Large Diameter)

RESIDENT PROJECT INSPECTION

PART 1 GENERAL

1.01 SECTION INCLUDES

A. Project Manager shall furnish a Resident Project Inspector (RPI), assistants and other field staff to inspect Contractor's performance of work.

B. Through more extensive on-site inspections of work in progress and field checks of materials and equipment by RPI and assistants, Engineer shall endeavor to provide further protection for Owner against defects and deficiencies in work; but furnishing of such services will not make Engineer responsible for or give Engineer control over construction means, methods, techniques, sequences or procedures or for safety precautions or programs, or responsibility for Contractor's failure to perform work in accordance with contract documents.

C. RPI is Project Manager's representative at site. RPI will act as directed by and under supervision of Engineer, and will confer with Project Manager regarding RPI's actions.

1.02 DUTIES AND RESPONSIBILITIES OF RPI

A. Schedules: Review progress schedule, schedule of shop drawing submittals and schedule of values prepared by Contractor and consult with Engineer concerning acceptability.

B. Conferences and Meetings: Attend meetings with Contractor, such as preconstruction conferences, progress meetings, job conferences and other project-related meetings, and prepare and circulate copies of minutes thereof.

C. Liaison:

1. Serve as Engineer's liaison with Contractor, working principally through Contractor's superintendent and assist in understanding intent of contract documents; and assist Engineer in serving as Owner's liaison with Contractor when Contractor's operations affect Owner's on-site operations.

2. Assist in obtaining from Owner additional details or information, when required for proper execution of work.

D. Shop Drawings and Samples:

1. Record date of receipt of shop drawings and samples.

2. Receive samples which are furnished at site by Contractor, and notify Engineer of availability of samples for examination.

3. Advise Engineer and Contractor of commencement of any work requiring a shop drawing or sample when submittal has not been approved by Engineer.

E. Review of Work, Rejection of Defective Work, Inspection and Tests:

1. RPI will conduct on-site observations of work in progress to assist Engineer in determining when work is in general proceeding in accordance with contract documents.

2. RPI will report to Engineer whenever RPI believes that any work is unsatisfactory, faulty, damaged, defective or does not conform to contract documents. RPI will advise Engineer of work that RPI believes should be corrected, rejected, uncovered for observation, or requires special testing, inspection or approval.

3. RPI will verify that tests, equipment and systems startups and operating and maintenance training are conducted in presence of appropriate personnel, and that Contractor maintains adequate records. Observe, record and report to Engineer appropriate details relative to test procedures and startups.

4. RPI will accompany visiting inspectors representing public or other agencies having jurisdiction over project, record results of these inspections and report to Engineer.

F. Interpretation of Contract Documents: RPI will report to Engineer when clarifications and interpretations of contract documents are needed and transmit to Contractor clarifications and interpretations as issued by Engineer.

G. Modifications: RPI will consider and evaluate Contractor's suggestions for modifications in drawings or specifications and report with recommendations to Engineer. RPI will transmit to Contractor decisions issued by Engineer.

H. Records:

1. RPI will maintain at job site orderly files for correspondence, reports of job conferences, shop drawings and samples, reproductions of original contract documents including all work directive changes, addenda, change orders, field orders, additional drawings issued subsequent to execution of contract, Engineer's clarifications and interpretations of contract documents, progress reports, and other project related documents.

2. RPI will keep a daily log, record Contractor hours on job site, amount of work completed, weather conditions, data relative to questions of work directive changes, change orders or changed conditions, list of job site visitors, daily activities, decisions, observations in general, and specific observations in more detail as in case of observing test procedures; and send copies to Engineer.

3. RPI will record names, addresses and telephone numbers of all contractors, subcontractors and major suppliers of materials and equipment.

I. Reports:

1. RPI will furnish Engineer periodic reports as required of progress of work and of Contractor's compliance with progress schedule, schedule of shop drawing and sample submittals.

2. RPI will consult with Engineer in advance of scheduled major tests, inspections or start of important phases of work.

3. RPI will draft proposed change orders and work directive changes, obtaining backup material from Contractor and recommend to Engineer change orders, work directive changes and field orders.

4. RPI will report immediately to Engineer and Owner upon occurrence of any accident.

J. Payment Requests: RPI will review applications for payment with Contractor for compliance with established procedure for their submission and forward with recommendations to Engineer, noting particularly the relationship of payment requested to schedule of values, work completed and materials and equipment delivered at site but not incorporated in work.

K. Certificates, Maintenance and Operation Manuals: During course of work, verify that certificates, maintenance and operation manuals and other data required to be assembled and furnished by Contractor are applicable to items actually installed and in accordance with contract documents, and have this material delivered to Engineer for review and forwarding to Owner prior to final payment for work.

L. Completion:

1. Before Engineer issues a Certificate of Substantial Completion, RPI will submit to Contractor a list of observed items requiring completion or correction.

2. RPI will conduct final inspection in company of Engineer, Owner and Contractor and prepare a final list of items to be completed or corrected.

3. RPI will observe that all items on final list have been completed or corrected and make recommendations to Engineer concerning acceptance.

1.03 LIMITATIONS OF AUTHORITY

A. Resident Project Inspector:

1. Shall not authorize any deviation from contract documents or substitution of materials or equipment, unless authorized by Engineer.

2. Shall not exceed limitations of Engineer's authority as set forth in contract documents.

3. Shall not undertake any of responsibilities of Contractor, subcontractors or Contractor's superintendent.

4. Shall not advise on, issue directions relative to or assume control over any aspect of means, methods, techniques, sequences or procedures of construction unless such advice or directions are specifically required by contract documents.

5. Shall not advise on, issue directions regarding or assume control over safety precautions and programs in connection with work.

6. Shall not accept shop drawing or sample submittals from anyone other than Contractor.

7. Shall not authorize Owner to occupy project in whole or in part.

8. Shall participate in specialized field or laboratory tests or inspections conducted by others as specifically authorized by Engineer.

1.04 DEFINITIONS

A. Working Day: Resident Project Inspector assistants and other field staff to assist Engineer are not required to work on Sundays or legal holidays. When Contractor is permitted to work on Sunday or legal holiday, prior arrangements shall be made for RPI not later than 2:00 p.m. on fourth working day prior to Sunday or legal holiday.

B. Uninspected Work: Any work performed on Sunday or legal holiday without benefit of RPI may require removal and replacement if so directed by the Inspector (an RPI). Removal and replacement shall be completed at no additional cost.

1.05 NOTICE OF NONCONFORMANCE

A. If, during the course of this project, Contractor does not comply with Contract Documents, the following procedure may be initiated by Project Manager.

1. Notify Contractor in writing of areas of nonconformance. Immediate compliance will be required unless otherwise approved by Project Manager.

2. Failure to come into compliance, will result in removal of Resident Project Inspector (RPI) from site. NO PAYMENT WILL BE MADE FOR WORK PERFORMED WITHOUT RESIDENT PROJECT INSPECTOR ON SITE AND NO SCHEDULE OR COST CHANGES WILL BE GRANTED.

3. Project Manager will direct RPI to return to site when compliance with Contract Documents is attained and written assurances provided from principal of firm that actions which lead to nonconforming work will not occur again.

PART 2 P R O D U C T S - Not Used

PART 3 EXECUTION - Not Used

END OF SECTION

Section 01454 S

TESTING LABORATORY SERVICES

The following supplement modifies Specification Section 01454. Where a portion of the Specification is modified or deleted by this Supplementary Specification, the unaltered portions of the Specification shall remain in effect.

1. Add the following to paragraph 1.04:

"D. Unless otherwise notified by Project Manager, Project Manager shall schedule and monitor testing. Provide 24 hours notice of testing to avoid delay of work."

END OF SUPPLEMENT

Approved by:

Hamlet Hovsepian, P.E.
Chief Engineer
Engineering and Construction Division

Date 10/27/04

Section 01454

TESTING LABORATORY SERVICES

PART 1 G E N E R A L

1.01 SECTION INCLUDES

A. Testing laboratory services and Contractor responsibilities related to those services.

1.02 REFERENCES

A. ASTM C 1077 - Standard Practice for Laboratories Testing Concrete and Concrete Aggregates for Use in Construction and Criteria for Laboratory Evaluation.

B. ASTM D 3666 - Standard Specification for Minimum Requirements for Agencies Testing and Inspecting Bituminous Paving Materials.

C. ASTM D 3740 - Standard Practice for Minimum Requirements for Agencies Engaged in the Testing and/or Inspection of Soil and Rock as Used in Engineering Design and Construction.

D. ASTM E 329 - Standard Specification for Minimum Requirements for Agencies Engaged in the Testing and/or Inspection of Materials Used in Construction.

E. ISO/TEC Guide 25 - General Requirements for the Competence of Calibration and Testing Laboratories.

1.03 SELECTION AND PAYMENT

A. The City will select, employ, and pay for services of an independent testing laboratory to perform inspection and testing identified in Part 3 of individual Specification sections.

B. Contractor shall employ and pay for services of an independent testing laboratory or laboratories to perform inspection and testing identified in Part 2 of individual Specification sections.

C. Employment of a testing laboratory by the City shall not relieve Contractor of its obligation to perform work in accordance with requirements of Contract documents.

D. The City will deduct a minimum two-hour charge for testing laboratory time from periodic progress payment when operations requiring testing or inspection are canceled without prior notification.

E. The City will deduct cost of retesting from periodic progress payment whenever failed work is removed, replaced and retested.

1.04 QUALIFICATION OF LABORATORY

A. Meet laboratory requirements of ASTM E 329 and applicable requirements of ASTM C 1077, ASTM D 3666, and ASTM D 3740.

B. Meet ISO/TEC Guide 17025 conditions for accreditation by the American Association for Laboratory Accreditation (A2LA) in specific fields of testing required in individual Specification sections.

C. If laboratory subcontracts are part of the testing services, such work will be placed with a laboratory complying with the requirements of this Section.

1.05 LABORATORY REPORTS

A. Testing laboratory shall provide and distribute copies of laboratory reports to the distribution list Project Manager provides at the pre-construction conference.

B. Keep one copy of each laboratory report distributed or faxed at the site field office for duration of the Work.

C. Laboratory will fax material supplier, Contractor and Project Manager reports that indicate failing test results by no later than close of business on the working day following test completion and review.

1.06 LIMITS ON TESTING LABORATORY AUTHORITY

A. Laboratory may not release, revoke, alter, or enlarge requirements of the Contract.

B. Laboratory may not approve or accept any portion of the Work.

C. Laboratory may not assume Contractor duties.

D. Laboratory has no authority to stop the Work.

1.07 CONTRACTOR RESPONSIBILITIES

A. Provide safe access to the Work and to manufacturer's facilities for Project Manager and for testing laboratory personnel.

B. Provide testing laboratory with a copy of the Construction Schedule and a copy of each update to Construction Schedule.

C. Notify Project Manager and testing laboratory during normal working hours of the day previous to expected time for operations requiring inspection and testing services. When Contractor fails to make timely prior notification, do not proceed with the operations requiring inspection and testing services.

D. Notify Design Consultant 24 hours in advance when Specification requires presence of Design Consultant for sampling or testing.

E. Request and monitor testing as required to provide timely results and to avoid delays to the Work. Provide samples to laboratory in sufficient time to allow required test to be performed in accordance with specified test methods before intended use of the Product.

F. Cooperate with laboratory personnel in collecting samples on site. Provide incidental labor and facilities for safe access to the Work to be tested, to obtain and handle samples at site or at source of Products to be tested, and to facilitate tests and inspections including storage and curing of test samples.

G. Make arrangements with laboratory through Project Manager. Payment for additional testing will be made in accordance with Document 00700 - General Conditions:

1. Re-testing required for failed tests.

2. Re-testing for nonconforming work.

3. Additional sampling and tests requested beyond specified requirements.

4. Insufficient notification of cancellation of tests for work scheduled but not performed.

PART 2 P R O D U C T S - Not Used

PART 3 E X E C U T I O N

3.01 CONDUCTING TESTING

A Conform to laboratory sampling and testing methods specified in individual Specification sections to the latest issues of ASTM standards, TxDOT methods, or other recognized test standards as approved by Project Manager.

B Requirements of this Section shall also apply to those tests for approval of materials, for mix designs, and for quality control of materials as performed by employed testing laboratories.

END OF SECTION

Section 01502

MOBILIZATION

PART 1 G E N E R A L

1.01 SECTION INCLUDES

A. Mobilization of construction equipment and facilities onto the site.

1.02 MEASUREMENT AND PAYMENT

A. Unit Price Contracts. If Contract is Unit Price Contract, measurement for mobilization is on a lump sum basis.

B. Stipulated Price (Lump Sum) Contract. If Contract is Stipulated Price Contract, payment for Work in this Section is included in total Stipulated Price.

C. Mobilization payments will be included in monthly payment estimates upon written application by Contractor subject to the following provisions:

1. Authorization for payment of 50 percent of that portion of Contract Price designated for mobilization will be made upon receipt and approval by Project Manager of the following items, as applicable:

a. Safety Program (Document 00700, Paragraph 10.1.1).

b. Site Utilization Plan (Section 01145).

c. Schedule of Values (Section 01292), if any.

d. Initial Construction Photographs (Section 01321), if needed.

e. Preliminary Construction Schedule and Billing Forecast (Section 01325).

f. Construction Schedule (Section 01325 or Section 01326, as applicable).

g. Submittal Schedule (Section 01330).

h. Site specific Storm Water Pollution Prevention Plan (SWPPP) and Notice of Intent (NOI) along with storm water application fee (Section 01410), if required.

i. Contractor’s Quality Control Plan (Section 01450), if required.

j. Establishment of a Field Office for Project Manager meeting requirements of Section 01520 - Temporary Field Office.

k. Traffic Control Plan (Section 01555), if required.

l. Plan for Control of Ground and Surface Water (Section 01578), if required.

m. Project Signs Submittal (Section 01580).

n. Trench Safety Program (Section 02260), if required.

o. Dewatering plan, when required.

2. Authorization for payment of the balance of that portion of Contract Price designated for mobilization will be made upon completion of the Work amounting to five percent of Original Contract Price. The amount of Contract Price designated for mobilization may not be applied in computing whether or not five percent of the Original Contract Price has been obtained.

3. Mobilization payments will be subject to retainage amounts stipulated in Document 00700 – General Conditions.

PART 2 P R O D U C T S -Not Used

PART 3 E X E C U T I O N -Not Used

END OF SECTION

Section 01504

TEMPORARY FACILITIES AND CONTROLS

PART 1 G E N E R A L

1.01 SECTION INCLUDES

A. Temporary facilities and necessary controls for the Project, including utilities, telephone, sanitary facilities, storage sheds and building, safety requirements, first aid equipment, fire protection, security measures, protection of the Work and property, access roads and parking, environmental controls, pest and rodent control and disposal of trash, debris and excavated material.

B. Facilities and controls specified in this section are considered minimum for the Project. Provide additional facilities and controls for proper execution of the Work and to meet Contractor's responsibilities for protection of persons and property.

1.02 MEASUREMENT AND PAYMENT

A. UNIT PRICES

1. No separate payment will be made for any temporary facilities and controls required under this section. Include cost of such work in contract price listed for mobilization.

1.03 CONTRACTOR'S RESPONSIBILITY

A. Comply with applicable requirements specified in other sections of Specifications.

1. Maintain and operate temporary facilities and systems to assure continuous service.

2. Modify and extend systems as the Work progress requires.

3. Completely remove temporary materials and equipment when no longer required.

4. Restore existing facilities used for temporary services to specified or original condition.

PART 2 P R O D U C T S - NOT USED

PART 3 E X E C U T I O N

3.01 TEMPORARY UTILITIES

A. Obtaining Temporary Service:

1. Make arrangements with utility service companies for temporary services.

2. Abide by rules and regulations of the utility service companies or authorities having jurisdiction.

3. Be responsible for utility service costs until Date of Substantial Completion. Included are fuel, power, light, heat, and other utility services necessary for execution, completion, testing, and initial operation of work.

B. Water:

1. Provide water required for and in connection with work to be performed and for specified tests of piping, equipment, devices, or for other use as required for proper completion of the Work.

2. Water to be drawn from public fire hydrants. Obtain transit meter from City of Houston, Department of Public Works and Engineering, Taps and Meters Section. Pay required deposit based on rates established by latest ordinance.

3. Provide and maintain an adequate supply of potable water for domestic consumption by Contractor personnel, Project Manager and representatives of the City.

C. Electricity and lighting:

1. Provide electric power service required for the Work including required testing, lighting, operation of equipment, and other Contractor use.

2. Electric power service includes temporary power or generators required to maintain plant operations during scheduled shutdowns.

3. Minimum lighting level shall be 10 foot-candles for open areas; 20-foot-candles for stairs and shops. Provide a minimum of one 300-watt lamp for each 200 square feet of work area.

D. Temporary Heat and Ventilation:

1. Provide temporary heat necessary for protection or completion of the Work.

2. Provide temporary heat and ventilation to assure safe working conditions; maintain enclosed areas at a minimum of 50 degrees F.

E. Telephone:

1. Provide emergency telephone service at Project site for use by Contractor personnel and others performing work or furnishing services at the site.

2. Provide Houston-Metro lines, allowing unlimited calls, without charge in Greater Houston Metropolitan area with "call waiting" and "call forwarding" options. Provide one telephone answering machine with beeperless remote message retrieval capability.

F. Sanitary Facilities:

1. Provide and maintain sanitary facilities for persons on the site; comply with regulations of State and local departments of health.

2. Enforce use of sanitary facilities by construction personnel at site. Enclose sanitary facilities. Pit-type toilets are not permitted. No discharge will be allowed from these facilities. Collect and store sewage and waste so as not to cause nuisance or health problems. Haul sewage and waste off-site and properly dispose in accordance with applicable regulations.

3. Locate toilets near the Work site and secluded from view insofar as possible. Keep toilets clean and supplied throughout the course of the Work.

3.02 STORAGE SHEDS AND BUILDINGS

A. Provide adequately ventilated, watertight storage facilities with floor above ground level for Products susceptible to weather damage.

B. Storage of Products not susceptible to weather damage may be on blocks off the ground.

C. Store Products in a neat and orderly manner. Place Products to permit easy access for identification, inspection and inventory.

D. Fill and grade site for temporary structures to provide drainage away from temporary and existing buildings.

3.03 SAFETY REQUIREMENTS

A. Submit a safety program at the pre-construction meeting and follow the program in accordance with Document 00700 – General Conditions. Include documented response to trench safety requirements of Section 02260 - Trench Safety System.

B. Conduct operations in strict accordance with applicable Federal, State and local safety codes and statutes and with good construction practice. Establish and maintain procedures for safety of all work, personnel and equipment involved in the Work.

C. Observe and comply with Texas Occupational Safety Act (Art. 5182a, V.C.S.) and with all safety and health standards promulgated by Secretary of Labor under Section 107 of Contract Work Hours and Standards Act, published in 29 CFR Part 1926 and adopted by Secretary of Labor as occupational safety and health standards under Williams-Steiger Occupational Safety and Health Act of 1970, and to other legislation enacted for safety and health of Contractor employees. Safety and health standards apply to Subcontractors and Suppliers as well as to the Contractor.

D. Observance of and compliance with safety regulations is Contractor's responsibility without reliance or superintendence of or direction by Project Manager. Immediately advise Project Manager of investigation or inspection by Federal Safety and Health inspectors of Contractor's or Subcontractor's work or place of work on site under the Contract, and after investigation or inspection, advise Project Manager of results. Submit one copy of accident reports to Project Manager within 10 days of occurrence.

E. Protect areas occupied by workmen using the best available devices for detection of lethal and combustible gases. Test devices frequently to assure functional capability. Constantly observe infiltration of liquids into the Work area for visual or odor evidence of contamination, and immediately take appropriate steps to seal off entry of contaminated liquids to the Work area.

F. Implement safety measures, including but not limited to safety personnel, first-aid equipment, ventilating equipment and other safety equipment specified or detailed on Drawings.

G. Maintain required coordination with City Police and Fire Departments during entire period covered by the Contract.

H. Include Project safety analysis in safety plan. Itemize major tasks and potential safety hazards. Plan to eliminate hazards or protect workers and public from each hazard.

3.04 FIRST AID EQUIPMENT

A. Provide a first aid kit throughout the construction period. List telephone numbers for physicians, hospitals, and ambulance services in each first aid kit.

B. Have at least one person thoroughly trained in first aid and CPR procedures present on the site when work is in progress. Contractor to conform to protocols and requirements for training and protection against “blood borne pathogens”.

3.05 FIRE PROTECTION

A. Conform to specified fire protection and prevention requirements established by Federal, State, or local governmental agencies and as provided in Safety Program.

3.06 SECURITY MEASURES

A. Protect the Work, materials, equipment, and property from loss, theft, damage, or vandalism. Protect City property used in performance of the Contract.

B. If existing fencing or barriers are breached or removed for purposes of construction, provide and maintain temporary security fencing equal to existing.

3.07 PROTECTION OF UTILITIES AND PIPELINES

A. Prevent damage to existing public utilities during construction. Approximate locations of known utilities are shown on Drawings, but all lines may not be shown. Excavate with caution and repair lines damaged by construction operations.

B. Use the Utility Coordinating Committee One Call System, telephone number, (713) 223-4567, which must be called 48 hours in advance. The toll free telephone number is 1-800-669-8344, Texas One Call System.

C. Before excavating, locate underground utilities by appropriate means including the use of metal detection equipment, and probes, or by excavation or surveys. Repair damage caused by investigative work and by failure to locate or to preserve underground utilities.

D. Give utility owners a minimum five days notice before commencing excavation to allow time to locate utilities and make adjustments or

relocations when they conflict with the Work. Include cost for temporary relocation of water, wastewater, and storm drainage lines, necessary to accommodate construction, in unit prices for utility construction unless otherwise noted. Bypassing of sanitary waste to storm drainage facilities is not allowed.

E. Prior to excavation near pipelines, request a representative of the pipeline company to meet with Contractor and Project Manager at the site to discuss procedures to be used. Request pipeline company's representative to locate the pipelines in at least three locations: at each side and at centerline of proposed excavation of proposed utility. Also request representative and Project Manager to be present to observe Contractor operations when excavation is conducted within 15 feet of pipeline.

F. Utility service lines are not shown on the construction document drawings. Contractor should anticipate that such service lines exit and should exercise extreme caution during construction. The utility service lines should be repaired and restored immediately as per the specification, if damaged due to any construction activities. No separate payment will be made for this repair and restoration work. Include payment in unit price for work in appropriate sections.

G. Prior to abandonment of utility, make appropriate arrangements with City and owner of utility to terminate service, remove meters, tranformers, and poles as may be required by site conditions.

3.08 PROTECTION OF THE WORK AND PROPERTY

A. Preventive Actions

1. Take necessary precautions and actions to prevent damage, injury, or loss to the Work or public and private property, including:

a. Storage of apparatus, supplies, and Products in an orderly, safe manner to limit interference with progress of the Work or work of other contractors, utility service companies, or the City's operations.

b. Suitable storage for Products subject to damage by exposure to weather, theft, breakage, etc.

c. Limitation of loading pressures imposed upon portions of the Work.

d. Frequent clean up of refuse, scrap materials, and debris from construction operations, necessary to maintain the site in a safe and orderly condition.

e. Provision of barricades and guard rails to protect pedestrian and traffic around openings, scaffolding, temporary stairs and ramps, excavations, elevated walkways, and other hazardous areas.

2. Protect public and private property adjacent to the site. Obtain written consent before entering or occupying privately-owned land except on easements provided for construction. Restore property damaged by construction operations to condition equal to or better than that existing before the damage.

B. Barricades and Warning Systems

1. Where work is performed on or adjacent to roadways, rights-of-ways, or public land, provide barricades, fences, lights, warning signs, danger signals, and other precautionary measures necessary for protection of persons or property and for protection of the Work.

a. Erect sufficient barricades to keep vehicles and pedestrians from entering the Work. Paint barricades to be visible at night. From sunset to sunrise, provide at least one light at each barricade.

b. Maintain barricades, signs, lights, and provide watchmen until Project Manager approves removal. Whenever work creates encroachment onto public roadways, station flagmen to manage traffic flow in accordance with approved traffic control plan.

c. Conform to requirements of section 01555 – Traffic Control and regulation.

C. PROTECTION OF EXISTING STRUCTURES

1. Underground Facilities

a. Known Underground Facilities are shown on the Drawings but all Facilities may not be shown. Explore sufficiently ahead of trenching and excavation work to locate Underground Facilities in order to prevent damage to them and to prevent interruption of utility services. Restore damage to Underground Facilities to original condition at no additional cost to the City.

b. If necessary to avoid unanticipated Underground Facilities, Project Manager may make changes in location of the Work.

c. If permanent relocation of an Underground Facility is required

and not provided for in the Contract documents, City Engineer will direct Contractor in writing to perform the Work under Modification provisions in Document 00700 - General Conditions.

2. Surface Structures include buildings, tanks, walls, bridges, roads, dams, channels, open drainage, piping, poles, wires, posts, signs, markers, curbs, walks, guard cables, fencing, and other facilities that are visible above the ground level.

3. Protection of Underground Facilities and Surface Structures:

   a. Support in place and protect Underground Facilities and Surface Structures located within or adjacent to the limits of the Work from damage. Install supports as required by the owner of the structure. Satisfy Project Manager that the owner of the facility or structure has approved methods and procedures before installing structure supports.

   b. Avoid moving or changing public utility or private corporation property without prior written consent of a responsible official of the facility or structure. Allow representatives of utilities to enter the construction site for maintenance and repair purposes or to make necessary changes.

   c. Notify utility and pipeline owners and operators of the nature of construction operations and dates when operations will be performed. When construction operations are required in immediate vicinity of existing structures, pipelines, or utilities, give a minimum of five working days advance notice. Probe and flag location of Underground Facilities prior to commencement of excavation. Keep flags in place until construction operations uncover the facility.

   d. Assume risk for damages and expenses to Underground Facilities and Surface Structures within or adjacent to the Work.

D. Employ a structural engineer to ensure protection measures are adequate for the safety and integrity of structures and facilities.

E. PROTECTION OF INSTALLED PRODUCTS:

1. Provide protection of Installed Products to prevent damage from subsequent operations. Remove protection facilities when no longer needed, prior to completion of the Work.

2. Control traffic to prevent damage to Products and surfaces.

3. Provide coverings to protect Products from damage. Cover projections, wall corners, jambs, sills, and exposed sides of openings in areas used for traffic and passage of materials in subsequent work.

3.09 ROADS AND PARKING

A. Prevent interference with traffic and operations of the City on existing roads.

B. Designate temporary parking areas to accommodate construction and City personnel. When site space is not adequate, provide additional off-site parking. Locate as approved by Project Manager.

C. Minimize use by construction traffic on existing streets and driveways.

D. Do not allow heavy vehicles or construction equipment in existing parking areas.

3.10 ENVIRONMENTAL CONTROLS

A. Use methods, equipment, and temporary construction necessary for control of environmental conditions at the site and adjacent areas.

B. Comply with statutes, regulations, and ordinances relating to prevention of environmental pollution and preservation of natural resources including National Environmental Policy Act of 1969, PL 91-190, Executive Order 11514.

C. Minimize impact to the surrounding environment. Do not use construction procedures that cause unnecessary excavation and filling of terrain, indiscriminate destruction of vegetation, air or stream pollution, or harassment or destruction of wildlife.

D. Limit disturbed areas to boundaries established by the Contract. Do not pollute on-site streams, sewers, wells, or other water sources.

E. Do not burn rubbish, debris or waste materials.

3.11 POLLUTION CONTROL

A. Provide methods, means, and facilities necessary to prevent contamination of soil, water or the atmosphere by discharge of Pollutants from construction operations.

B. Provide equipment and personnel to perform emergency measures to contain spillage, and to remove contaminated soils or liquids. Excavate and dispose of contaminated earth off-site in accordance with laws and regulations, and

replace with suitable compacted fill and topsoil.

C. Provide systems necessary for control of Pollutants.

1. Prevent toxic concentrations of chemicals.

2. Prevent harmful dispersal of Pollutants into the environment.

D. Use equipment that conforms to current Federal, State, and local laws and regulations.

3.12 PEST AND RODENT CONTROL

A. Provide rodent and pest control as necessary to prevent infestation of construction or storage areas.

B. Employ methods and use materials that will not adversely affect conditions at site or on adjoining properties.

3.13 NOISE CONTROL

A. Provide vehicles, equipment, and use construction activities that minimize noise to the greatest degree practicable. Conform to noise levels of Chapter 30 –Noise and Sound Level Regulation, City Code of Ordinances, and latest OSHA standards. Do not permit noise levels to interfere with the Work or create a nuisance to surrounding areas.

B. Conduct construction operations during daylight hours except as approved by Project Manager.

C. Select construction equipment that operates with minimum noise and vibration. When directed by Project Manager, correct objectionable noise or vibration produced by operation of equipment at no additional cost to the City. Sound Power Level (PWL) of equipment shall not exceed 85 dbA (re: 10^{-12} watts) measured five feet from the equipment, or at a lower level if prescribed by City Ordinances. Equipment noise requirements are contained in equipment specifications.

3.14 DUST CONTROL

A. Use water or other methods approved by Project Manager to control amount of dust generated by vehicle and equipment operations.

3.15 WATER RUNOFF AND EROSION CONTROL

A. Comply with requirements of section 01410 – TPDES Requirements.

B. Conduct fill, grading and ditching operations and provide adequate methods necessary to control surface water, runoff, subsurface water, and water from excavations and structures in order to prevent damage to the Work, the site, or adjoining properties.

1. Plan and execute construction and earthwork by methods that control surface drainage from cuts and fills, and from borrow and waste disposal areas.

2. Minimize area of bare soil exposed at one time.

3. Provide temporary control measures, such as berms, dikes, and drains.

4. Provide, operate, and maintain equipment and facilities of adequate size to control surface water.

5. Construct fill and waste areas by selective placement of materials to eliminate erosion of surface silts or clays that may erode.

6. Direct water away from excavations, pits, tunnels, and other construction areas to prevent erosion, sedimentation or damage.

7. Maintain existing drainage patterns adjacent to the site by constructing temporary earth berms, sedimentation basins, retaining areas, and temporary ground cover.

8. Dispose of drainage water in a manner to prevent flooding, erosion, or other damage to the site or adjoining areas, in conformance with environmental requirements.

9. Inspect earthwork periodically to detect any evidence of erosion. Take corrective measures as required to control erosion.

END OF SECTION

Section 01506

DIVERSION PUMPING

PART 1 G E N E R A L

1.01 DEFINITIONS

A. Diversion-pumping: Installation and operation of bulkheads, plugs, hoses, piping, and pumps required to maintain sewer flow and prevent backups and overflows.

1.02 SYSTEM DESCRIPTION

A. Provides continuous sewer service to users of sewer systems while maintenance or construction operations are in progress, by diverting flow around construction locations. Maintain sewer flow to prevent backup or overflow onto streets, yards and unpaved areas or into buildings, adjacent ditches, storm sewers, and waterways. Do not divert sewage outside of sanitary sewer system.

B When pumps are operating, have an experienced operator on site to monitor operation, adjust pumps, make minor repairs to system, and report problems.

1.03 SUBMITTALS

A. Conform to requirements of Section 01330 - Submittals Procedures.

B. For systems that bypass sanitary sewer line segments of 42-inch diameter or larger, submit a Diversion Pumping Plan prior to installation. Show location, number and size of pumps, number, location, size and type of hoses or rigid piping, and location of downstream discharge; and special features where pipes or hoses cross roadways, temporary trenches, support bridges.

1.04 SCHEDULING

A. When the City operates or maintains diversion pumping in construction areas, coordinate construction activities with Project Manager.

B. Cease operation of diversion pumping when approved by Project Manager.

PART 2 P R O D U C T S

2.01 MATERIALS

A. Design piping, joints and accessories to withstand at least twice maximum system pressure or 50 psi, whichever is greater.

B. Use self-priming type or submersible electric pumps, with a working pressure gauge on the discharge. Pumps shall meet requirements of City of Houston Noise and Sound Level Regulations.

PART 3 E X E C U T I O N

3.01 FIELD QUALITY CONTROL

A. During diversion pumping, do not allow sewage to leak, dump, or spill into or onto areas outside of existing sanitary sewer systems.

B. In the event of an accidental spill or overflow, immediately stop discharge and take action to clean up and disinfect spill. Promptly notify Project Manager so required reporting can be made to the Texas Commission on Environmental Quality (TCEQ) and the Environmental Protection Agency (EPA).

3.02 CLEANING

A. When diversion-pumping operations are complete, drain sewage within piping into sanitary sewers prior to disassembly.

END OF SECTION

Section 01520

TEMPORARY FIELD OFFICE

PART 1 G E N E R A L

1.01 SECTION INCLUDES

A Temporary field office building and associated parking area.

1.02 FACILITY DESCRIPTION

A Temporary field office to be utilized by authorized representatives of the City to coordinate and monitor daily construction activities performed by Contractor.

B. Field office shall be a non-smoking facility.

PART 2 P R 0 DUCTS

2.01 FIELD OFFICE

A General:

1. Locate office in vicinity of the Work at a location approved by Project Manager or where indicated on Drawings.

2. Furnish, Install and maintain field office for exclusive use of authorized representatives of the City. Provide sufficient room for Project meetings and Inspector's office.

3. Provide office within 10 days of Date of Commencement of the Work.

4. Construct two all-weather, hard surfaced parking spaces for exclusive use of authorized representatives of the City. Provide all-weather surfaced walk between parking spaces and field office.

B. Minimum Construction:

1 Structurally sound foundation and superstructure.

Weather tight with insulated roof, walls and 7-foot ceiling (minimum).

3. Stairs or walkway with handrail and covered entrance platform (minimum 4 feet by 4 feet) with mud scraper at door.

4. Resilient floor covering.

5. Screened windows with area equal to approximately 10 percent of floor area sufficient for light, view of the site, and ventilation. Provide each window with operable sash and burglar bars.

6. Secure exterior doors with dead-bolt cylinder locks and burglar bars.

C. Minimum Services:

1. Exterior entrance light.

2. Interior lighting of 75 foot-candles minimum at desktop height

3. Automatic heating to maintain 65 degrees F in winter.

4. Automatic cooling to maintain 75 degrees F in summer.

5. Electric power service.

6. Three telephone service lines one for voice, one for data, and one for fax, for exclusive use of authorized representatives of the City.

7. Sanitary facilities in field office with one water closet, one lavatory, and one medicine cabinet for exclusive use of authorized representatives of the City.

D. Minimum Furnishings:

1. One 5-drawer desk

2. Two swivel desk chairs with casters.

3. One plan table.

4. One drawing plan rack.

5. One 4-drawer legal file cabinet complete with fifty legal-size hanging folders and two full-sized carriers.

6. One marker board with cleaner and markers.

7. Two waste baskets.

8. One 30-inch by 36-inch tack board.

9. One all-purpose fire extinguisher.

10. Six protective helmets (hard hats) with ratchet adjustment for exclusive use of authorized representatives of the City.

11. Conference table and chairs to accommodate 10 persons.

12. All in one printer, copier, plain paper fax machine.

13. Telephone instrument separate from fax machine.

E. Provide adequate space for one set of Contract documents for ready reference.

PART 3 EXECUTION

3.01 MAINTENANCE

A Maintain all-weather surface driveway and parking areas, buildings, walkways, stairs and required furnishings and equipment for duration of the Contract.

B. Provide janitorial services for duration of the Contract consisting of twice weekly sweeping and mopping floors, trash removal, weekly restroom cleaning, and weekly dusting of furniture and equipment.

C. Provide soap, paper towels, toilet paper, cleansers and other necessary consumables.

D. Immediately repair damage, leaks or defective service.

3.02 PROJECT CLOSEOUT

A Remove temporary field office and signs and restore site as specified in Section 01770 - Closeout Procedures.

END OF SECTION

SECTION 01554

TRAFFIC CONTROL AND STREET SIGNS

PART 1 GENERAL

1.01 SECTION INCLUDES

A. Materials, hardware and installation of Traffic Signs.

1.02 SUBMITTALS

A. Contractor shall submit a list of intended suppliers and products to be used for all signs, posts, and associated hardware. City reserves the right to request actual product samples prior to approval.

1.03 MEASUREMENT AND PAYMENT

A. Signs installed or replaced will be measured by the each sign. Signs refurbished will be measured by each sign.

B. Payment for installation of traffic signs will be on the basis of each sign installed.

C. The price is full compensation for furnishing and installing new signs and hardware. Cost of associated posts, footings, and miscellaneous mounting hardware will not be paid for directly but is to be included in the unit price bid for installation of each traffic sign.

D. Non-standard signs installed or replaced will be measured by the square foot of the sign face. Non-standard signs shall not be installed without prior approval from the City.

PART 2 PRODUCTS

2.01 MATERIALS

A. The following ASTM Standards and documents, of the issue in effect on the date of Invitation for Bid, form a part of this specification to the extent herein.

1. ASTM B 209 Specification for Aluminum and Aluminum Alloy Sheet and Plate

2. ASTM D 523 Standard Method for Test for Specular Gloss

3. ASTM D 4956 Standard Specification for Retroreflective Sheeting for Traffic Control

4. ASTM E 284 Standard Definition of Terms Relating to Appearance of Materials

5. ASTM E 308 Computing the Colors of Objects by Using the CIE System

6. ASTM E 810 Standard Test Method for Coefficient of Retroreflection of Retroreflective Sheeting

7. ASTM E 1164 Standard Practice for Obtaining Spectrophotometric Data for Object-Color Evaluation

B. Substrate (Sign Blanks). This shall be aluminum alloy 5052-H38 and otherwise in conformance with ASTM B-209 and have gold chromate finish. The size, shape and thickness of the sign blanks are as indicated on the standard detail sheet in the plans or as specified by the Engineer.

1. Metal working. The aluminum shall be free of burrs and pits on both sides, including
edges and holes, and shall be made ready for applications of the sheeting.

2. Surface Preparation. The aluminum shall be thoroughly cleaned and degreased with solvent and alkaline emulsions cleaner by immersion, spray, or vapor degreasing and dried prior to application of the gold chromate sheeting coat. The aluminum shall be new and corrosion-free with holes drilled or punched, corners rounded to the radii shown in the standard detail sheet, and all edges smoothed prior to application of sheeting. The heavy or medium chromate coating shall conform in color and corrosion resistance to that imparted by the Alodine 1200F treatment.

3. Size. The dimensions of substrate applications for regulatory, warning, and guide signs shall be as specified by the Engineer and as shown on the plans.

C. Sign Face (Background, Legends, Symbols, and Colors). These shall be in accordance with the Standard Highway Sign Designs (SHSD) for Texas and with the Texas Manual of Uniform Traffic Control Devices (TMUTCD).

1. The sign face, made of electronic film and retro-reflective sheeting shall comply with the appearance, specification, and good workmanship designated by the using agency for sign faces constructed of screen processed retro-reflective sheeting of the same type.

2. All sign blanks shall be covered with appropriate retro-reflective sheeting.

   a. All ground mounted stop signs, warning signs, and other regulatory signs, shall use at a minimum High Intensity Prismatic Reflective Sheeting.

   b. All overhead signs shall use Diamond Grade Reflective Sheeting.

   c. All other signs shall use Super Engineer Grade Sheeting

3. Application Methods. The method of application of sheeting, letters, numbers, and symbols shall be precisely as prescribed in writing by the manufacturer.

   a. Legend Spacing and Layout. Spacing and layout for all traffic control signs shall conform to the SHSD.

   b. Tolerance for Horizontal Alignment. Letters, numerals, and symbols shall be horizontally aligned to a tolerance of 1/16 inch.

   c. Tolerance for Vertical Alignment. Letters, numerals, and symbols shall be vertically aligned to a tolerance of 1/16 on each letter in each line.

D. Sign Posts**.** Steel post shall conform to the standard specification for hot rolled carbon sheet steel, structural quality, ASTM designation A570, Grade 50. Average minimum yield strength after cold forming is 60,000 psi. The cross section of the post shall be square tube formed steel, carefully rolled to size and shall be welded directly in the corner by high frequency resistance welding or equivalent process and externally scarified to agree with corner radii. Sign posts shall be hot dipped galvanized conforming to ASTM A653, G90.

1. Installation. The square end of the post shall not be modified or pointed.

   a. Flange. When sign post installation is required over building basements, bridges and cavities, a galvanized cast iron pipe flange shall be used. The base shall be 8 inches in diameter with six 5/16 inch holes drilled equidistant around the circumference, ⅝ inch from the outer edge. The neck of the flange shall be 3inches in diameter, drilled and threaded to receive a 2 inch diameter galvanized post.

   b. Hardware. All ground mounted signs shall be attached to posts using 5/16” nut and bolt assembly, the bolt being 2 ½” in length. Stainless steel banding material, brackets and clips will be used for signs installed on light standards or mast arms.

c. Construction. Anchors shall be anchored in a minimum of one cubic foot of class “C” concrete, 28 inches deep, with a 6 inch long, ⅜ inch diameter pin inserted through the pre-drilled hole 3 inches from the bottom of the pole. Where the pole installation requires surface mounting, an 8 inch flange with a 2 inch threaded collar shall be used. The pole shall be galvanized, two inches in diameter and threaded to fit the flange. Sign placement and orientation shall be as specified in the construction plans.

E. Each finished sign shall have the following sticker affixed to the back in a location where it will be visible when the sign is installed:



The sticker shall be Zebra Technologies Z-Ultimate 3000 White or approved equal. Finished product shall be weather and fade resistant for the expected life of the sign.

F. Warranty. The Contractor shall warrant the materials and workmanship of each sign in accordance with the maximum limits of material warranties extended by manufacturers of raw materials, subject to the conditions they specify. The retro-reflective sheeting will be considered unsatisfactory if it has deteriorated due to natural causes to the extent that: (1) the sign is ineffective for its intended purpose when viewed from a moving vehicle under normal day and night driving conditions; or (2) the coefficient of retro-reflection is less than the minimum specified for that sheeting. When sign failure occurs prior to the minimum years indicated and an inspection demonstrates that the failure is caused by materials warranted to contractor to endure at least that long, the sign will be replaced or repaired free of materials charges. When failure occurs and inspection demonstrates that such failure is due to poor workmanship, the sign will be replaced or repaired at Contractor's expense, including shipping charges.

PART 3 EXECUTION

3.01.1 EQUIPMENT

A. The contractor shall provide machinery, tools, and equipment necessary for proper execution of the work.

3.01.2 CONSTRUCTION

A. Construction shall be high quality with no visible defects in the finished product. Fabrication shall be in accordance with these specifications. Street name signs shall always be supplied and installed at each project intersection whether signs previously existed at the location or not.

B. The removal of existing signs shall be coordinated with the Traffic Operations Section of the Public Works Department (713-803-3054) and arrangements made for a convenient time to deliver City signs and poles. All salvaged traffic signs shall be delivered to the Traffic Operations Center located at 2200 Patterson Street. All deliveries to the Traffic Operations Center requires a minimum notice of two (2) working days prior to returning or delivering any sign and/or sign related material.

3.03 RESPONSIBILITIES

A. The contractor is responsible for providing and supplying aluminum traffic signs covered with retro-reflective sheeting, applying standard legends (or special legends if shown in the plans) to the covered sign blanks, galvanized steel sign poles, pole anchors, all hardware for installing the signs and poles, and for installing traffic signs, poles and anchors as shown in the plans or call for in the contract documents, complete and ready for field installations.

END OF SECTION

Section 01555

TRAFFIC CONTROL AND REGULATION

PART 1 G E N E R A L

1.01 SECTION INCLUDES

A. Requirements for signs, signals, control devices, traffic barriers, flares, lights and traffic signals; construction parking control, designated haul routes, and bridging of trenches and excavations.

B. Qualifications and requirements for use of flagmen.

1.02 MEASUREMENT AND PAYMENT

A. Unit Price Contracts.

1. Traffic control and regulation. Payment for traffic control and regulation is on a lump sum basis. Include preparation and submittal of traffic control plan if different than shown on Drawings, and provision of traffic control devices, equipment, and personnel necessary to protect the Work and public. Payment will be based on Contractor's Schedule of Values for traffic control and regulation.

2. Payment for traffic control will be authorized by Project Manager in three (3) parts. Partial payment will be made according to following schedule:

a. Payment of 25 percent of traffic control amount will be authorized when permanent control devices and necessary temporary markings, sufficiently deployed along job site as required to maintain progress of work, are installed at job site and approved. This limiting percentage will be prorated based upon extent of Contractor's setup.

b. A payment of 50 percent of traffic control amount will be authorized when pavement replacement commences. This limiting percentage will be prorated based upon linear footage, as measured along centerline axis of water main, of pavement replaced.

c. A payment of 25 percent of traffic control amount will be authorized when permanent pavement markings are restored and all unnecessary permanent and temporary control devices removed. This limiting percentage will be prorated based upon the extent of restoration.

3. Flagmen: Measurement is on a lump sum basis for flagmen as required for the project. The amount invoiced shall be determined based on the schedule of value submitted for flagmen.

4. New Portable Concrete Low Profile Traffic Barrier Provided. Payment is on a unit price basis for each linear foot of low profile traffic barrier provided, installed with hardware assemblies and connected together in accordance with the approved traffic control plan.

5. Portable Concrete Low Profile Traffic Barrier picked up from City of Houston Stockpile. Payment is on a unit price basis for each linear foot of low profile traffic barrier picked up from designated stockpile, moved onto the project, set at location and connected together.

6. Portable Concrete Low Profile Traffic Barrier Installed. Payment is on a unit price basis for each linear foot of low profile traffic barrier delivered to the project location, installed with hardware assemblies and connected together in accordance with the approved traffic control plan.

7. Portable Concrete Low Profile Traffic Barrier Moved and Reset. Payment is on a unit price basis for each linear foot of low profile traffic barrier disassembled, moved on the project, reset at the new locations and connected together. Include cost to repair roadway in the unit price.

8. Portable Concrete Low Profile Traffic Barrier Removed. Payment is on a unit price basis for each linear foot of low profile traffic barrier removed from the project, including hardware assemblies, and stockpiling at location listed in Section 01110 – Summary of Work. Include cost to repair roadway in the unit price.

9. Refer to Section 01270 - Measurement and Payment for unit price procedures.

B. Stipulated Price Contracts. Include payment for work under this section in the total Stipulated Price.

1.03 REFERENCES

A. Texas Manual on Uniform Traffic Control Devices (TMUTCD)

B. Article 4413 (29bb), commonly referred to as Private Investigators and Private Security Agencies Act, and Article 2.12, Texas Code of Criminal Procedure.

C. Code of Ordinances, City of Houston, Texas.

1. Chapter 10 Buildings And Neighborhood Protection, Article X Cleanup After Demolition Or Removal Of Structures

2. Chapter 40 Streets and Sidewalks, Article XVII Pedestrian Way Impairments

1.04 SUBMITTALS

A. Conform to requirements of Section 01330 - Submittal Procedures.

B. Traffic control plan:

1. If using traffic control plan contained in the Contract without modification, submit a letter confirming use of the plan.

2. If using a different traffic control plan, submit the plan for approval. The plan must conform to TMUTCD requirements and be sealed by a Registered Texas Professional Engineer.

C. Submit copies of approved lane closure permits issued by City Traffic Engineering Branch.

D. Submit Schedules of Values for traffic control plan and flagmen within 30 days following Notice to Proceed.

E. Submit records verifying qualifications of Uniformed Peace Officers and Certified Flagmen proposed for use on the Work.

F. When working in the central business district, submit copies of approved Pedestrian Way permits issued by the City's Traffic Engineering Branch.

1.05 FLAGMEN

A. Use Uniformed Peace Officers and Certified Flagmen to control movement of vehicular and pedestrian traffic when construction operations encroach on public traffic lanes. Unless otherwise approved by Project Manager, use Uniformed Peace Officer for work along major thoroughfares, schools, churches, hospitals and Work at signalized intersections.

B. Uniformed Peace Officer: Individual employed full-time as a peace officer who receives separate compensation as a privately employed flagman. Private employment may be an employee-employer relationship or on an individual basis. Flagman may not be in the employ of another peace officer nor be a reserve peace officer.

1. Uniformed Peace Officers may be:

   a. sheriffs and their deputies;

   b. constables and deputy constables;

   c. marshals or police officers of an incorporated city, town or village; or

   d. as otherwise provided by Article 2.12, Code of Criminal Procedure.

2. The Uniformed Peace Officer must be a full-time peace officer, must work a minimum average of 32 paid hours per week, and must be paid a rate not less than the prevailing minimum hourly wage rate set by the federal Wage and Hour Act. The individual must be entitled to vacation, holidays, and insurance and retirement benefits.

C. Certified Flagman: Individual who receives compensation as a flagman and meets the following qualifications:

1. Formally trained and certified in traffic control procedures by the City s E. B. Cape Center.

2. Speaks English. Ability to speak Spanish is desirable but not required.

3. Paid for flagman duty at an hourly rate not less than the wage rate set for Rough Carpenter under the City's Wage Scale for Engineering Construction.

D. Certified Flagmen must wear a distinctive uniform, bright-colored vest, and be equipped with appropriate flagging and communication devices while at the Work site. They must also have in their possession while on duty, a proof of training identification card issued by the appropriate training institute.

PART 2 P R O D U C T S

2.01 SIGNS, SIGNALS, AND DEVICES

A. Comply with TMUTCD requirements.

B. Traffic cones and drums, flares and lights: Conform to local jurisdictions' requirements.

C. When working in the Central business district, provide pedestrian pathway

signage approved by the City's Traffic Engineering Branch.

2.02 PORTABLE LOW PROFILE CONCRETE BARRIERS

A. The low profile concrete barrier is a patented design. Information concerning this barrier may be obtained from Texas Transportation Institute, Texas A&M University System, College Station, Texas 77843-3135, (409) 845-1712.

PART 3 E X E C U T I O N

3.01 PUBLIC ROADS

A. Submit requests forms for lane closure and sidewalk closure to the City's Traffic Engineering Branch at least three working days prior to need for blocking vehicular lanes or sidewalks. Do not block lanes or sidewalks without approved permits. Obtain application from the City's Traffic Engineering Branch at 611 Walker, 5th floor or at the following internet address: http://www.ci.houston.tx.us/pwe/mrow/laneclosure.htm.

B. Follow laws and regulations of governing jurisdictions when using public roads. Pay for and obtain permits from jurisdiction before impeding traffic or closing lanes. Coordinate activities with Project Manager.

C. Give Project Manager one-week notice before implementing approved traffic control phases. Inform local businesses of impending traffic control activities.

D. Notified police department, fire department, METRO, and local schools, churches, and businesses in writing a minimum of five business days prior to beginning work.

E. Maintain 10-foot wide all-weather lanes adjacent to the Work for emergency vehicle use. Keep all-weather lanes free of construction equipment and debris.

F. Do not to obstruct normal flow of traffic from 7:00 a.m. to 9:00 a.m. and 4:00 p.m. to 6:00 p.m. on designated major arterials or as directed by Project Manager.

G. Maintain local driveway access to residential and commercial properties adjacent to work areas at all times. Use all-weather materials approved by Project Manager to maintain temporary driveway access to commercial and residential driveways.

H. Keep streets entering and leaving job site free of excavated material, debris, and foreign material resulting from construction operations in compliance with

applicable ordinances.

I. Remove existing signage and striping that conflict with construction activities or that may cause driver confusion.

J. Provide safe access for pedestrians along major cross streets.

K. Alternate closures of cross streets so that two adjacent cross streets are not closed simultaneously.

L. Do not close more than two consecutive esplanade openings at a time without prior approval from Project Manager.

3.02 CONSTRUCTION PARKING CONTROL

A. Control vehicular parking to prevent interference with public traffic and parking, access by emergency vehicles, and the City's operations.

B. Monitor parking of construction personnel's vehicles in existing facilities. Maintain vehicular access to and through parking areas.

C. Prevent parking on or adjacent to access roads or in non-designated areas.

3.03 FLARES AND LIGHTS

A. Provide flares and lights during hours of low visibility to delineate traffic lanes and to guide traffic.

3.04 HAUL ROUTS

A. Utilize haul routes designated by authorities or shown on drawings for construction traffic.

B. Confine construction traffic to designated haul routes.

C. Provide traffic control at critical areas of haul routes to regulate traffic and minimize interference with public traffic.

3.05 TRAFFIC SIGNS AND SIGNALS

A. Construct necessary traffic control devices for temporary signals required to complete the Work including loop detectors, traffic signal conduits, traffic signal wiring and crosswalk signals. Notify the City’s Traffic Engineering Branch a minimum of 60 days in advance of need for control boxes and switchgear. The City will perform necessary service, programming or adjustments, to signal boxes and switchgear if required during construction.

B. Install and operate traffic control signals to direct and maintain orderly traffic flow in areas under Contractor's control affected by Contractor's operations. Post notices, signs and traffic controls before moving into next phase of traffic control.

C. Relocate traffic signs and signals as the Work progresses to maintain effective traffic control.

D. Unless otherwise approved by Project Manager, provide driveway signs with name of business that can be accessed from each crossover. Use two signs for each crossover.

E. Replace existing traffic control devices in Project area.

F. Project Manager may direct Contractor to make minor adjustments to traffic control signage to eliminate driver confusion and maintain orderly traffic flow during construction at no additional cost to the City.

3.06 BRIDGING TRENCHES AND EXCAVATIONS

A. When necessary, construct bridges over trenches and excavation to permit an unobstructed flow of traffic across construction areas and major drives. Use steel plates of sufficient thickness to support H-20 loading and install to operate with minimum noise.

B. Shore trench or excavation to support bridge and traffic.

C. Secure bridging against displacement with adjustable cleats, angles, bolts or other devices when:

1. bridging is placed over existing bus routes,

2. more than five percent of daily traffic is comprised of commercial or truck traffic,

3. more than two separate plates are used for bridging, and

4. when bridge is to be used for more than five consecutive days.

D. Extend steel plates used for bridging a minimum of 1 foot beyond edges of trench or excavation. Use temporary paving materials such as premix to feather edges of plates to minimize wheel impact on secured bridging.

3.07 REMOVAL

A. Remove equipment and devices when no longer required.

B. Repair damage caused by installation.

C. Remove post settings to a depth of 2 feet.

3.08 TRAFFIC CONTROL, REGULATION AND DIRECTION

A. Use Flagmen to control, regulate and direct an even flow and movement of vehicular and pedestrian traffic, for periods of time as may be required to provide for public safety and convenience, where:

1. multi-lane vehicular traffic must be diverted into single lane vehicular traffic,

2. vehicular traffic must change lanes abruptly,

3. construction equipment must enter or cross vehicular traffic lanes and walks,

4. construction equipment may intermittently encroach on vehicular traffic lanes and unprotected walks and crosswalk,

5. traffic regulation is needed due to rerouting of vehicular traffic around the Work site, and

6. where construction activities might affect public safety and convenience.

B. Use of Flagmen to assist in the regulation of traffic flow and movement does not relieve Contractor of responsibility to take other means necessary to protect the Work and public.

3.09 INSTALLATION STANDARDS

A. Place temporary pavement for single lane closures, in accordance with TMUTCD.

B. Reinstall temporary and permanent pavement markings as approved by Project Manager. When weather conditions do not allow application according to manufacturer's requirements, alternate markings may be considered. Submit proposed alternate to Project Manager for approval prior to installation. No additional payment will be made for use of alternate markings.

3.10 MAINTENANCE OF EQUIPMENT AND MATERIAL

A. Submit name, address and telephone number of individual designated to be

responsible for maintenance of traffic handling at construction site to Project Manager. Individual must be accessible at all times to immediately correct deficiencies in equipment and materials used to handle traffic including missing, damaged, or obscured signs, drums, barricades, or pavement markings.

B. Inspect signs, barricades, drums, lamps and temporary pavement markings daily to verify that they are visible, in good working order, and conform with traffic handling plans as approved by Project Manager. Immediately repair, clean, relocate, realign, or replace equipment or materials that are not in compliance.

C. Keep equipment and materials, signs and pavement markings, clean and free of dust, dirt, grime, oil, mud, or debris.

D. Obtain approval of Project Manager to reuse damaged or vandalized signs, drums, and barricades.

END OF SECTION

Section 01562

TREE AND PLANT PROTECTION

PART 1 G E N E R A L

1.01 SECTION INCLUDES

A. Tree and plant protection.

B. Minimum qualifications of Arborist and Urban Forester.

1.02 MEASUREMENT AND PAYMENT

A. Payment for Tree Protection, including tree pruning or tree removal, shall be paid as a Lump Sum basis that shall include all items specified in this section unless payment is specified otherwise in this section

B Payment for Zero Curb Cutback will be on a per linear foot basis.

C. Payment for Checker Plate will be on a square foot basis.

D. Refer to Section 01270-Measurement and Payment for unit price procedures.

1.03 SUBMITTALS

A. Conform to requirements of Section 01330 – Submittal Procedures.

B. Submit name and experience of qualified Arborist, proposed for use on the Work, to Project Manager.

1.04 PROJECT CONDITIONS

A. Preserve and protect existing trees and plants to remain from foliage, branch, trunk, or root damage that could result from construction operations.

B. Prevent following types of damage:

1. Compaction of root zone by foot or vehicular traffic, or material storage.

2. Trunk damage from equipment operations, material storage, or from nailing or bolting.

3. Trunk and branch damage caused by ropes or guy wires.

4. Root or soil contamination from spilled solvents, gasoline, paint, lime slurry, and other noxious materials.

5. Branch damage due to improper pruning or trimming.

6. Damage from lack of water due to:

   a. Cutting or altering natural water migration patterns near root zones.

   b. Failure to provide adequate watering

7. Damage from alteration of soil pH factor caused by depositing lime, concrete, plaster, or other base materials near roots zones.

8. Cutting of roots larger than one inch in diameter.

1.05 DAMAGE ASSESSMENT

A. When trees other than those designated for removal are destroyed or damaged as result of construction operations, remove and replace with same size, species, and variety up to and including 8 inches in trunk diameter. Trees larger than 8 inches in diameter shall be replaced with an 8 inch diameter tree of the same species and variety and total contract amount will be reduced by an amount determined from the following formula and paid to Tree Fund 0.7854 x D2 x $13.25 where D is diameter in inches of tree or shrub trunk measured 12 inches above grade for that portion of the tree which is greater than 8 inches in diameter. A permit must be applied for and approved by the City of Houston, Urban Forestry Division prior to removal of any tree not scheduled for removal in the tree treatment schedule. Contractor shall contact City of Houston, Urban Forestry, at 832-395-8459 to apply for tree removal permit when needed.

PART 2 P R O D U C T S

2.01 MATERIALS

A. Pruning Paint: Black latex, water based paint, free of all petroleum products.

B. Fertilizer: Fertilizer shall be a root stimulant that contains at a minimum the following ingredients: Ectomycorrhizal Fungi, VA Mycorrhizal (VAM) Fungi, Rhizosphere Bacillus spp., Kelp Meal Humic Acid, and Soluble Yucca.

C. Tree Protection Fencing: Orange, plastic mesh fenching, 4 feet in height with 6 feet high “t” bar posts installed 10 feet on centers as per drawings.

D. Plastic Root/Soil Protection: Clear polyethylene sheeting, minimum 6 mil, thickness.

PART 3 E X E C U T I O N

3.01 PROTECTION OF EXISTING TREES AND SHRUBS

A. Site preparation work and/or construction work shall not begin in any area where tree preservation measures have not been completed and approved.

B. Protect exposed roots and root zone areas from contamination from stabilization materials and concrete using polyethylene.

C. Cover exposed roots within 4 hours to reduce damage caused by desiccation. Roots may be covered with soil, mulch, polyethylene, or wet burlap to help protect them from drying.

D. Designate limited areas as concrete washout areas. Locate concrete washout areas away from root zones.

E. Install root pruning trenching where designated in tree treatment schedule and shown on the tree protection drawings. Trees scheduled for root pruning are called out specifically in the treatment schedule. Trench shall be located 2 ft. from the edge of proposed waterline or sanitary sewer for trees called out for root pruning for water or fittings, or sanitary sewer in the treatment schedule, 2 ft. from edge of proposed storm sewer pipe for trees called out for root pruning for storm in the treatment schedule, 30” back of proposed curb for trees called out for root pruning for street, and at edge of sidewalk for trees called out for root pruning for sidewalk. Root pruning shall not be performed where there is not adequate space to be located sufficiently away from tree to prevent damage. All pruning must be evaluated by Contractor’s Certified Arborist and reviewed and approved by City Forester before being performed. Trench locations shown on tree preservation plan are drawn to scale and should be located in field as drawn on plan. Exact locations shall be approved in the field by engineer and/or project urban forester prior to installation. Trenching depth shall be a minimum of 2 ft. deep and a maximum of 6 inches wide for water, fittings, sanitary sewer, storm, and street. Trenching depth shall be to the anticipated bottom of sidewalk and base material for sidewalk root pruning, roots lower than sidewalk shall not be pruned. All roots shall be cut by trencher, chainsaw, or handsaw to the specified depth. Roots shall be cut cleanly, and or not ripped, torn, or chopped. Trench shall be backfilled and compacted immediately after trenching. Trench shall be installed prior to any clearing and grubbing, excavation for underground, or any other site work.

F. Install tree protection fencing around each tree to be preserved as indicated in the tree treatment schedule and on the tree protection plan.

1. Each tree to be preserved shall be protected with a tree protection fence. The fencing shall be continuous between posts, shall be pulled taut prior to securing to posts, and shall be firmly attached to the posts with a minimum of 4 wire ties.

2. All tree protection fencing shall be installed prior to site work or construction activity. The fence shall be placed in a continuous alignment as shown on the tree protection plan. Fences shown on tree protection plan are drawn to scale and shall be installed as drawn, in the field. In general fences shall be placed 30" back of existing curb or edge of pavement where root pruning or zero curb cutback is not specified, and 6" back of root pruning trench where root pruning is specified and immediately back of curb where zero curb cutback is specified. Exact locations shall be approved by the project urban forester and/or engineer in the field. The Fences shall be placed to protect roots, trunks, and foliage. The contractor shall not remove or relocate tree protection fencing and shall not operate within the limits shown without direct approval of the project urban forester. In areas where the proposed waterline is located in the existing road side ditch and where tree protection fencing can not be installed across the ditch, the fencing shall be installed at the top of outside ditch bank and no bore pits, peep holes, service taps, or any excavation should occur in the area immediately in front of the tree protection fencing for trees called out with "bore" in the Tree Treatment Schedule. The "bore" limits shall be the same as the limits of the tree protection fencing.

3. Storage of equipment or materials will not be allowed inside a fence. Entryways and access into a protected area shall not be provided unless approved by the project urban forester.

4. Damage to tree fences occurring during the progress of the work shall be repaired immediately at no additional cost to owner. Workmen shall be clearly instructed to exercise caution in performance of work near trees being preserved.

5. Tree protection fencing shall be removed by contractor, at no additional costs, upon completion of all construction activity in each work zone area. Tree protection fencing materials used in the first two work zone areas shall be removed and utilized in subsequent work zone areas. Materials and labor shall be paid for each linear foot of fencing installed in first two work areas. All fencing installed in subsequent work zone areas shall be paid for labor only.

G. Boring/Auguring of water lines or sanitary sewer lines

1. Water line or sanitary sewer line shall be bored/augured/ horizontally drilled under

critical root zones areas of trees designated with auger or bore in the tree treatment schedule. The entire area protected with tree protection fencing shall be bored. No bore pits, come through holes, peep holes, push pits, or long or short side service taps shall be allowed in the areas protected by tree protection fencing. The tree protection plan takes into consideration the limits of augering equipment, there should be room for adequately spaced bore pits, peep holes, come through holes, and push pits. Any changes to the location of the tree protection fencing shall be authorized by the project Urban Forester and City Engineer.

H. Hand digging of Service taps and leads

1. Trees called out for Hand dig short side service tap are located in very close proximity to existing short side water meters. Excavating the service tap with machinery would significantly impact the tree and be in violation of the City of Houston's Street Tree Ordinance. These short side service taps shall be excavated with manual labor to expose any roots 1" in diameter and larger. The first 24" of excavation shall be completed manually to expose the roots. Any root 1" in diameter and larger shall remain undamaged, the roots shall not be cut , nor shall the bark and cambium layer be scraped or damaged. Once the roots are exposed, if there is adequate room to utilize a mini-excavator without damaging the roots, the mini-excavator can be utilized to complete the excavation down to the water line. 1" plywood shall be placed on grade to provide root protection in the area of access of the mini-excavator. If roots 1" diameter or larger are cut or damaged, responsible party will be subject to a citation under the Street Tree Ordinance, and may also be required to incur the cost of tree removal and replacement of damaged tree on an inch for inch basis, if required by City of Houston Urban Forestry Division.

2. Trees called out for Hand dig short side or long side service lead are located in very close proximity to existing water meters. Excavating the service lead with machinery would significantly impact the tree and be in violation of the City of Houston's Street Tree Ordinance. Short side leads shall be excavated with manual labor to expose any roots 1" in diameter and larger from the service tap of the meter. Come out hole and excavation required for long service leads shall be excavated with manual labor to expose roots 1" in diameter and larger, from the come out hole to the meter. In each case, all roots 1" in diameter and larger shall remain undamaged, the roots shall not be cut, nor shall the bark and cambium layer be scraped or damaged. If roots 1" diameter or larger are cut or damaged, responsible party will be subject to a citation under the cost of tree removal and replacement of damaged tree on an inch by inch basis, if required by City of Houston Urban Forestry Division.

3. Trees called out for Hand dig sanitary stub up are located in very close proximity to proposed service lead. Excavating the service lead with machinery would significantly impact the tree and be in violation of the City of Houston's Street Tree

Ordinance. Excavation for sanitary stub up shall be completed with manual labor to expose any roots 1" in diameter and larger. The lead shall be bored from face of curb to stub up hole when called out in the tree treatment schedule. Come out and stub up holes shall be excavated with manual labor to expose roots 1" in diameter and larger. In case, all roots 1" in diameter and larger shall remain undamaged, the roots shall not be cut, nor shall the bark and cambium layer be scraped or damaged. If roots 1" diameter or larger are cut or damaged, responsible party will be subject to a citation under the Street Tree Ordinance, and may be required to incur the cost of tree removal and replacement of damaged tree on an inch by inch basis, if required by City of Houston Urban Forestry Division.

4. Long side service taps shall not be located in an area specified to be bored in the tree treatment schedule. Should it be absolutely necessary to locate a long side service tap in an area specified to be bored, the excavation shall be completed as specified in paragraph 1 of this section-Hand digging short side service taps.
5. All water meters and sanitary service leads called out on P&P drawings and visible in the field have been addressed in the Tree Protection Plan. Should any additional meters or lead be found during construction, or in any new meters or leads installed beneath the canopy of any tree, fenced for tree protection, the excavation shall be completed as specified in paragraph 1 and/or 2 of this section and paid for at the unit cost for each included in contract.

I. Pruning of Trees

1. Trees shall be pruned in accordance with the American National Standard for tree pruning, ANSI A300 (Part 1) – 2001 Pruning Revision of ANSI A300-1995 Tree, Shrub and Other Woody Plant Maintenance – Standard Practices. Pruning shall be completed by professional arborists who has received training in proper pruning techniques.

2. Clearance prune designated trees for public streets, sidewalks, and construction areas. Provide minimum 14 feet and maximum of 18 feet of vertical clearance over proposed water trunk lines. Provide minimum of 14 feet and maximum of 16 feet of vertical clearance over proposed street construction, from 24" back of curb on one side to 24" back of curb on the other side. Provide 20' of vertical clearance over proposed storm sewer up to 38" in size, and 30' of vertical clearance for storm sewer larger than 38" in size. Pruning to be installed prior to any construction activity. Contractor shall notify property owner prior to trimming or pruning any trees with trunks located on private property. Exceptions will be made for trees determined to be arboriculturally significant by City of Houston Urban Forestry. Pruning of trees identified will be completed with approval and supervision of City of Houston Urban Forestry.

3. All cuts should be made sufficiently close to the parent limb or trunk without cutting into the branch collar or leaving a protruding stub, so that closure can readily start under normal conditions. All lateral cuts shall be made to a lateral that is least 1/3 the diameter of the parent limb. Clean cuts shall be made at all times.

4. Trees shall be pruned in a manner that will not destroy or alter the natural shape and character of the tree. Apply black latex paint to all fresh wounds on Oak (Quercus) species immediately after each cut is made.

5. Crown cleaning prune designated trees shall include selective removal of dead, diseased, and/or broken limbs.

J. Tree Removal

1. Trees scheduled for removal shall be sawed down and debris hauled from the site the same day. The stump shall be ground to 6" below grade and excess grindings shall be hauled from the site the same day, so that a pile of grindings is not left where the stump was ground. Enough grindings should be left so that an open hole does not remain.

2. Only those trees called out for removal in the Tree Treatment Schedule shall be removed, or otherwise damaged. Should it be determined that any additional trees must be removed, a permit must be applied for and approved from the City of Houston Urban Forestry Division prior to removal. Contractor shall contact Urban Forestry at 832-395-8459.

K. Root Stimulation

1. Deep root stimulate designated trees. Mix fertilizer with wetting agent per label instructions.

2. Stimulate entire root zone area within the dripline of the tree and continue 10 feet beyond the dripline, leaving out areas of anticipated root loss (construction areas).

3. Mixture shall be injected into the top 10 inches of soil under pressure of 150 to 200 psi as soil conditions warrant.

4. Mix in a tank with agitation capability per label instructions. Inject the mixture on a 2.5 ft. square grid at 4 lbs, actual nitrogen per 1,000 sq. ft.

L. Regularly water trees which have received root damage, to eliminate additional stress caused by lack of moisture. Water during periods without adequate rainfall. For example, should 1.0" of rain not be received within a week period, the trees should be thoroughly watered.

March through September, water once every two weeks. October through February, water every three weeks. Water thoroughly to saturate the entire root zone area.

M. Chemically treat tree trunks with evidence of borer activity with the appropriate approved insecticide mixed and applied per the manufacturer's product application recommendations. Trees shall be sprayed within 24 hours after observance of borer activity.

N. Grading and filling around trees.

1. Maintain existing grade within the dripline of trees, unless otherwise indicated.

2. Where existing grade around trees is above new finish grade, under supervision of project urban forester, carefully hand excavate within the dripline to make transition to new finish grade.

3. Where existing grade is below new finish grade, place clean bank sand in a single layer to make the transition to new grade. Do not compact; hand grade to required elevation. Specifically to areas where proposed curb is higher than existing and backfill will be required.

O. Demolition, Forming and Pouring Sidewalks (Sidewalk on Grade)

1. Demolition of existing sidewalks, located in or adjacent to the limits of tree protection fencing, shall be completed without disturbing, cutting, or otherwise damaging tree roots and soil located beneath them.

2. The new sidewalk shall be formed at or above the elevation of the existing sidewalk, without disturbing, cutting or otherwise damaging tree roots. Every effort has been made to address tree root and sidewalk elevation issues with information available in the field and on plan and profile sheets. The elevation of every tree root was not available, if tree roots are found to be in conflict with proposed sidewalk, project engineer and urban forester shall be consulted as to how to install sidewalks with minimal impacts to adjacent trees.

3. Checkerplate shall be installed in areas called out only if tree root elevations prohibit construction of ADA compliant sloped concrete sidewalks. Checkerplate shall be installed per detail.

P. Zero curb cutback

1. Disturbance of tree roots or soil behind the existing and/or proposed curb within root zones of trees designated for zero curb cutback shall be prohibited. If the curb can not be removed without disturbing soil or damaging roots back of curb when using

equipment for demolition, the curb shall be broken using a hand held jackhammer and removed by hand.

2. The exposed roots and soil shall be covered immediately after demolition with 6 mil polyethylene in order to avoid desiccation, and contamination by the lime used for road bed stabilization. The polyethylene shall be placed so that it covers the vertical face of soil back of curb and laid back onto the grade 12 inches back of curb. The polyethylene should remain in place, across the entire area specified for zero curb cutback, from the time the existing curb is demolished until the time when the new curb is formed and backfilled. The polyethylene can be pulled up from the vertical face while the road bed is being graded or mixed, to avoid catching the plastic with machinery, but shall be replaced immediately after equipment has completed. The vertical face shall not be exposed for more than 8 hours in any 24 hour period.

3. There shall be no stabilization back of curb in the zero curb cutback areas, or forming with steel forms. The existing grade and roots back of existing curb shall not be disturbed. This may require forming of the new street with wooden forms with stakes inside forms, which may require leaving the forms in place after the street is poured. Should wooden forms be utilized, the wood shall be at minimum a 2x6. The new curb may require hand finishing, as a slip curb machine may not have adequate clearance without disturbing the roots that are to be protected with the zero curb cutback.

4. Roots extending into the street, or on top of the existing curb, in areas to paved shall be cut and removed by hand prior to disturbance or removal with equipment. Roots shall be pruned flush with the proposed back of curb. Roots one inch in diameter and larger shall be cut in a manner to provide a smooth, clean cut surface. Cuts shall be made with the appropriate pruning shears or pruning saws. Roots shall not be chopped or broken.

5. In areas where proposed curb will be may be lower than existing top of curb and tree roots 2” diameter or larger are present, the soil and roots shall not be graded or laid back. The existing elevation shall be maintained and the curb formed to meet elevation or a short elevation difference roots and top of curb maintained.

Q. Demolition, Forming and Pouring of Drive Way Approaches

1. Demolition of existing driveway approaches located beneath the dripline of any tree shall be completed without disturbing, cutting, or otherwise damaging tree roots and soil located beneath them.

2. The new approach shall be formed at or above the elevation of the existing approach where tree roots 2” diameter or larger are present, without disturbing, cutting or

otherwise damaging tree roots. Maximum drive slopes may be needed at bottom of apron to allow forming of drive over tree roots at top of drive. As with sidewalks, the elevation of every tree roots was not available in design. If tree roots are found to be in conflict with proposed approach, project engineer and urban forester shall be consulted as to how to install drive way with minimal impacts to adjacent trees.

R. Replacement Trees for Tree Removals under Ordinance

1. Location, species, and size of replacement trees are indicated on the drawings. Contractor shall layout individual trees at locations shown on drawings. Contractor shall layout individual trees at locations shown on drawings and be responsible for utility locate requirements. In case of conflicts, notify City Engineer and City Urban Forestry before proceeding with work. Trees shall be laid out and locations approved by City Engineer prior to planting.

2. Trees shall meet and be planted according to City of Houston Standard Specification 02915.

S. Arborist and Urban Forester Qualifications

1. Arborist – Employ qualified arborist acceptable to City's Parks and Recreation Department to complete all tree treatments. Arborist shall be normally engaged in the field and have a minimum of 5 years experience. Qualifications of the selected arborist shall be submitted for review and approval by the project engineer and City of Houston.

2. Urban Forester – An Urban forester shall be hired to monitor and assist with field layout (exact locations of fencing, root pruning, and zero curb cutback) of the tree preservation program during demolition and construction to ensure tree protection procedures and techniques are practiced as specified to address concerns and conditions which occur in the field. At a minimum, the individual responsible for monitoring and field layout of the tree protection shall have a minimum of 5 years of experience as a consultant, and shall not be affiliated with a tree care contractor in the Houston area. Qualifications of the selected urban forester shall be submitted for review and approval by the project engineer and City of Houston Urban Forestry Department.

END OF SECTION

Section 01570

STORM WATER POLLUTION PREVENTION CONTROL

PART 1 G E N E R A L

1.01 SECTION INCLUDES

A. Implementation of Storm Water Pollution Prevention Plans (SWP3) described in Section 01410 – TPDES Requirement.

B. Installation, maintenance and removal, of storm water pollution prevention structures: diversion dikes, interceptor dikes, diversion swales, interceptor swales, down spout extenders, pipe slope drains, paved flumes and level spreaders. Structures are used during construction and prior to final development of the site.

C. Filter Fabric Barriers:

1. Type 1: Temporary filter fabric barrier for erosion and sediment control in non-channelized flow areas.

2. Type 2: Temporary reinforced filter fabric barrier for erosion and sediment control in channelized flow areas.

D. Hay Bale Fence.

E. Drop Inlet Basket

F. Inlet Sediment Traps

G. Brush Berm

H. Sand Bag Barrier

I. Bagged Gravel Barrier

J. Sediment Basin

K. Inlet Protection Barrier

1.02 MEASUREMENT AND PAYMENT

A. UNIT PRICES

1. Payment for filter fabric barrier is on a linear foot basis measured between limits of beginning and ending of stakes.

2. Payment for reinforced filter fabric barrier is on a linear foot basis measured between limits of beginning and ending of stakes.

3. Payment for drop inlet baskets is on a unit price basis for each drop inlet basket.

4. Payment for storm inlet sediment traps is on a unit price basis for each storm inlet sediment trap.

5. Payment for storm water pollution prevention structures is on a lump sum basis for the project. Earthen structures with outlet and piping include diversion dikes, interceptor dikes, diversion swales, interceptor swales, and excavated earth-outlet sediment trap, embankment earth-outlet sediment trap, down spout extenders, pipe slope drains, paved flumes, stone outlet sediment trap, and level spreaders.

6. Payment for hay bale barrier, if included in Document 00410 - Bid Form, is on a linear foot of accepted bale barriers, if not include in cost of storm water pollution prevention structures.

7. Payment for brush berm, if included in Document 00410 - Bid Form, is on a linear foot of accepted brush berm, if not include in cost of storm water pollution prevention structures.

8. Payment for sandbag barrier, if included in Document 00410 - Bid Form, is on a linear foot basis measured between limits of beginning and ending of sandbags, if not include in cost of storm water pollution prevention structures.

9. Payment for bagged gravel barrier, if included in Document 00410 - Bid Form, is on a linear foot basis measured between limits of beginning and ending of bagged gravel barrier, if not include in cost of storm water pollution prevention controls.

10. Payment for inlet protection barriers, if included in Document 00410 - Bid Form, is on a linear foot basis measured along outside face of inlet protection barrier, if not include in cost of storm water pollution prevention structures.

11. Refer to Section 01270 - Measurement and Payment for unit price procedures.

B. Stipulated Price (Lump Sum) Contract. If Contract is Stipulated Price Contract, payment for Work in this Section is included in total Stipulated

1.03 REFERENCE STANDARDS

A. ASTM

1. A 36 – Standard Specification for Carbon Structural Steel.

2. D698 – Standard Test Methods for Laboratory Compaction Characteristics of Soil Using Standard Effort (12,400 ft-lbf/ft3 (600kN-m/m3)).

3. D3786 – Standard Test Method for Hydraulic Bursting Strength for knitted Goods and Nonwoven Fabrics.

4. D 4355 - Standard Test Method for Deterioration of Geotextiles from Exposure to Ultraviolet Light and Water (Xenon-Arc Type Apparatus).

5. D 4491 - Standard Test Methods for Water Permeability of Geotextiles by Permittivity.

6. D 4632 - Standard Test Method for Grab Breaking Load and Elongation of Geotextiles.

7. D 4833 - Standard Test Method for Index Puncture Resistance of Geotextiles, Geomembranes, and Related Products.

8. D 6382 - Standard Practice for Dynamic Mechanical Analysis and Thermogravimetry of Roofing and Waterproofing Membrane Material.

B. Storm Water Management Handbook for Construction Activities prepared by City of Houston, Harris County and Harris County Flood Control District.

1.04 SYSTEM DESCRIPTIONS

A. Filter Fabric Barrier Type 1 and Type 2: Install to allow surface or channel runoff percolation through fabric in sheet-flow manner and to retain and accumulate sediment. Maintain Filter Fabric Barriers to remain in proper position and configuration at all times.

B. Hay Bale Fence: Install to allow surface runoff percolation through hay in sheet-flow manner and to retain and accumulate sediment. Maintain Hay Bale Fence to remain in proper position and configuration at all times.

C. Interceptor Dikes and Swales: Construct to direct surface or channel runoff around the project area or runoff from project area into sediment traps.

D. Drop Inlet Baskets: Install to allow runoff percolation through the basket and to retain and accumulate sediment. Clean accumulation of sediment to prevent clogging and backups.

E. Sediment Traps: Construct to pool surface runoff from construction area to allow sediment to settle onto the bottom of trap.

F. Sand Bags: Are used during construction activities in unstabilized minor swales, ditches, or streambeds when the contributing drainage area is no greater than 2 acres. It is also sediment barrier for stage one Inlet.

G. Bagged Gravel Barrier: Are used during construction activities in unstabilized minor swales, ditches, or streambeds when the contributing drainage area is no greater than 2 acres. It is also sediment barrier for stage two Inlet.

H. Drop Inlet Insert Basket: Is a temporary barrier placed within a storm drain inlet (Lower Portion of Stage I and Upper Portion of Stage II Inlets) consisting of a filter fabric supported by a metal frame work to prevent sediment and other pollutants from entering convey system.

I. Brush Berm: Brush Berm is constructed at the perimeter of a distribute site within the developing area.

1.05 SUBMITTALS

A. Conform to requirements of Section 01330 - Submittal Procedures.

B. Submit manufacturer's literature for product specifications and installation instructions.

C. Submit manufacturer=s catalog sheets and other product data on geotextile or filter fabrics, outlet pipe, perforated riser and connectors.

D. Submit proposed methods, equipment, materials, and sequence of operations for storm-water pollution prevention structures.

E. Submit shop drawings for Drop Inlet Baskets.

PART 2 P R O D U C T S

2.01 CONCRETE

A. Concrete: Class B in accordance with Section 03315 – Concrete for Utility Construction or as shown on the Drawings.

2.02 AGREGATE MATERIALS

A. Use poorly graded cobbles with diameter greater than 3 inches and less than 5 inches.

B. Provide gravel lining in accordance with Section 2320 – Utility Backfill Materials or as shown on the drawings.

C. Provide clean cobbles and gravel consisting of crushed concrete or stone. Use clean, hard crushed concrete or stone free from adherent coatings, salt, alkali, dirt, clay, loam, shale, soft or flaky materials, or organic matter.

D. Sediment Pump Pit Aggregate: Use nominal 2-inch diameter river gravel.

2.03 PIPE

A. Polyethylene culvert pipe or PVC sewer pipe in accordance with Section 02505- High Density Polyethylene (HDPE) Solid and Profile Wall Pipe and Section 02506 Polyvinyl Chloride Pipe or as shown on the Drawings.

B. Inlet Pipes: Galvanized steel pipe in accordance with Section 02642 Corrugated Metal Pipe or as shown on the Drawings.

C. Standpipe for Sediment Pump Pits: Galvanized round culvert pipe or round PVC pipe, minimum of 12-inch and a maximum of 24-inch diameter, perforate at 6 to 12 inch centers around circumference.

2.04 GEOTEXTILE FILTER FABRIC

A. Woven or nonwoven geotextile filter fabric made of either polypropylene, polyethylene, ethylene, or polyamide material, in continuous rolls of longest practical length.

B. Grab Strength: 100 psi in any principal direction (ASTM D-4632), Mullen burst strength >200 psi (ASTM D-3786), and equivalent opening size between 50 and 140.

C. Furnish ultraviolet inhibitors and stabilizers for minimum 6 months of expected usable construction life at temperature range of 0 degrees F to 120 degrees F.

D. Mirafi, Inc., Synthetic Industries, or equivalent

2.05 BARRIER

A. Wire Barrier: Woven galvanized steel wire, 14 gauge by 6-inch square mesh spacing, minimum 24 inch roll or sheet width of longest practical length.

B. Barrier Stakes: Nominal 2 by 2 inch moisture-resistant treated wood or steel posts (min. of 1.25 lbs. per linear foot and Brinell Hardness greater than 140) with safety caps on top; length as required for minimum 8 inch bury and full

height of filter fabric.

2.06 SANDBAGS

A. Provide woven material made of polypropylene, polyethylene, or polyamide material.

1. Minimum unit weight of four ounces per square yard.

2. Minimum grab strength of 100 lbs in any principal direction (ASTM D4632)

3. Mullen burst strength exceeding 300 lbs (ASTM D4833).

4. Ultraviolet stability exceeding 70 percent. After 500 hours of exposure (ASTM 4355).

5. Size: Length:18 to 24 inches. Width: 12 to 18 inches. Thickness: 6 to 8 inches. Weight: Approximately 40 to 50 pounds not to exceed 75 pounds.

2.07 Bagged gravel Barrier

1. Minimum unit weight of four ounces per square yard.

2. Minimum grab strength of 100 lbs in any principal direction (ASTM D4632)

3. Mullen burst strength exceeding 300 lbs (ASTM D4833).

4. Ultraviolet stability exceeding 70 percent. After 500 hours of exposure (ASTM 4355).

5. Size: Length:18 to 24 inches. Width: 12 to 18 inches. Thickness: 6 to 8 inches. Weight: Approximately 40 to 50 pounds not to exceed 75 pounds.

2.08 DROP INLET BASKET

A. Provide steel frame members in accordance with ASTM A36.

B. Construct top frame of basket with two short sides of 2 inch by 2 inch and single long side of 1 inch by 1 inch, 1/8 inch angle iron. Construct basket hangers of 2 inch by 1/4 inch iron bars. Construct bottom frame of 1 inch by 1/4 inch iron bar or 1/4 inch plate with center 3 inches removed. Use minimum 1/4 inch diameter iron rods or equivalent for sides of inlet basket.

Weld minimum of 14 rods in place between top frame/basket hanger and bottom frame. Exact dimensions for top frame and insert basket will be determined based on dimensions of type of inlet being protected.

2.09 HAY BALE

A. Hay: Standard-baled agricultural hay bound by wire, nylon, or polypropylene rope. Do not use jute or cotton binding.

B. Hay Bale Stakes (applicable where bales are on soil): No. 3 (3/8 diameter) reinforcing bars, deformed or smooth at Contractor's option, length as required for minimum 18 inch bury and full height bales.

PART 3 E X E C U T I O N

3.01 PREPARATION, INSTALLATION AND MAINTEINANCE

A. Provide erosion and sediment control structures at locations shown on the Drawings.

B. Do not clear, grub or rough cut until erosion and sediment control systems are in place unless approved by Project Manger to allow installation of erosion and sediment control systems, soil testing and surveying.

C. Maintain existing erosion and sediment control systems located within project site until acceptance of Project or until directed by Project Manger to remove and discard existing system.

D. Regularly inspect and repair or replace damaged components of erosion and sediment control structures. Unless otherwise directed, maintain erosion and sediment control structure until project area stabilization is accepted. . Redress and replace granular fill at outlets as needed to replenish depleted granular fill. Remove erosion and sediment control structures promptly when directed by Project Manger. Dispose of materials in accordance with Section 01576 - Waste Material Disposal.

E. Remove and dispose sediment deposits at the designated spoil site for the Project. If a project spoil site is not designated on Drawings, dispose of sediment off site at approved location in accordance with Section 01576 - Waste Material Disposal.

F. Unless otherwise shown on the Drawings, compact embankments, excavations, and trenches in accordance with Section 02315 Roadway

Excavation or Section 2317 Excavation and Backfill for Utilities.

G. Prohibit equipment and vehicles from maneuvering on areas outside of dedicated right of way and easements for construction. Immediately repair damage caused by construction traffic to erosion and sediment control structures.

H. Protect existing trees and plants in accordance with Section 1562 – Tree and Plant Protection.

3.02 SEDIMENT TRAPS

A. Install sediment traps so that surface runoff shall percolate through system in sheet flow fashion and allow retention and accumulation of sediment.

B. Inspect sediment traps after each rainfall, daily during periods of prolonged rainfall, and at a minimum once each week. Repair or replace damaged sections immediately.

C. Use fill material for embankment in accordance with Section 02320 – Utility Backfill Materials.

D. Excavation length and height shall be as specified on Drawings. Use side slopes of 2:1 or flatter.

E. Stone outlet sediment traps:

1. Maintain minimum of 6 inches between top of core material and top of stone outlet, minimum of 4 inches between bottom of core material and existing ground and minimum of 1 foot between top of stone outlet and top of embankment.

2. Embed cobbles minimum of 4 inches into existing ground for stone outlet. Core shall be minimum of 1 foot in height and in width and wrapped in triple layer of geotextile filter fabric.

F. Sediment Basin with Pipe Outlet Construction Methods: Install outlet pipe and riser as shown on the Drawings.

G. Remove sediment deposits when design basin volume is reduced by one-third or sediment level is one foot below principal spillway crest, whichever is less.

3.03 FILTER FABRIC BARRIER CONSTRUCTION METHODS

A. Fence Type 1: Filter Fabric: Barrier

1. Install stakes 3 feet on center maximum and firmly embed minimum 8 inches in soil. If filter fabric is factory preassembled with support netting, then maximum support spacing is 8 feet. Install wood stakes at a slight angle toward the source of anticipated runoff.

2. Trench in the toe of the fence lines so the downward face of the trenches is flat and perpendicular to direction of flow. V-trench configuration as shown on Drawings may also be used.

3. Lay fabric along edges of trenches in longest practical continuous runs to minimize joints. Make joints only at a support post. Splice with minimum 6-inch overlap and seal securely.

4. Staple filter fabric to stakes at maximum 3 inches on center. Extend fabric minimum 18 inches and maximum 36 inches above natural ground.

5. Backfill and compact trench.

B. Barrier Type 2: Reinforced Filter Fabric Barrier

1. Layout barrier same as for Type 1.

2. Install stakes at 6 feet on center maximum and at each joint in wire fence, firmly embedded 1-foot minimum, and inclined it as for Type 1.

3. Tie wire fence to stakes with wire at 6 inches on center maximum. Overlap joints minimum one bay of mesh.

4. Install trench same as for Type 1.

5. Fasten filter fabric wire fence with tie wires at 3 inches on center maximum.

6. Layout fabric same as for Type 1. Fasten to wire fence with wire ties at 3 inches on center maximum and, if applicable, to stakes above top of wire fence it as for Type 1.

7. Backfill and compact trench.

8. Attach filter fabric to wooden fence stakes spaced a maximum of 6 feet apart or steel fence stakes spaced a maximum of 8 feet apart and embedded a minimum of 12 inches. Install stakes at a slight angle toward source of anticipated runoff.

9. Trench in toe of filter fabric barrier with spade or mechanical trencher so that downward face of trench is flat and perpendicular to direction of flow. A V-trench configuration may also be used. Lay filter fabric along edges of trench. Backfill and compact trench upon completion of Construction.

10. Filter fabric fence shall have a minimum height of 18 inches and a maximum height of 36 inches above natural ground.

11. Cut length of fence to minimize use of joints. When joints are necessary, splice fabric together only at support post with minimum 6 inch overlap and seal securely.

12. When used in swales, ditches or diversions, elevation of barrier at top of filter fabric at flow line location in channel shall be lower than bottom elevation of filter fabric at ends of barrier or top of bank, whichever is less, in order to keep storm water discharge in channel from overtopping bank.

C. Triangular Filter Fabric Barrier Construction Methods

1. Attach filter fabric to wire fencing, 18 inches on each side. Provide a fabric cover and skirt with continuous wrapping of fabric. Skirt should form continuous extension of fabric on upstream side of fence.

2. Secure triangular fabric filter barrier in place using one of the following methods:
   a. Toe-in skirt 6 inches with mechanically compacted material;
   b. Weight down skirt with continuous layer of 3-inch to 5-inch graded rock; or
   c. Trench-in entire structure 4 inches.

3. Anchor triangular fabric filter barrier structure and skirt securely in place using 6-inch wire staples on 2-foot centers on both edges and on skirt, or staked using 18-inch by 3/8-inch diameter re-bar with tee ends.

4. Lap fabric filter material by 6 inches to cover segment joints. Fasten joints with galvanized shoat rings.

3.04 DIKE AND SWALE

A. Unless otherwise indicated, maintain minimum dike height of 18 inches, measured from cleared ground at up slope toe to top of dike. Maintain side slopes of 2:1 or flatter.

B. Dike and Swale Stabilization: When shown on the Drawings, place gravel lining 3 inches thick and compacted into the soil or 6 inches thick if truck crossing is expected. Extend gravel lining across bottom and up both sides of swale minimum height of 8 inches vertically, above bottom. Gravel lining on dike side shall extend up the up slope side of dike a minimum height of 8 inches, measured vertically from interface of existing or graded ground and up slope toe of dike, as shown on Drawings.

C. Divert flow from dikes and swales to sediment basins, stabilized outlets, or sediment trapping devices of types and at locations shown on Drawings. Grade dikes and swales as shown on Drawings, or, if not specified, provide positive drainage with maximum grade of 1 percent to outlet or basin.

D. Clear in accordance with Section 2233 – Clearing and Grubbing Compact embankments in accordance with Section 2315 – Roadway Excavation.

E. Carry out excavation for swale construction so that erosion and water pollution is minimal. Minimum depth shall be 1 foot and bottom width shall be 4 feet, with level swale bottom. Excavation slopes shall be 2:1 or flatter. Clear, grub and strip excavation area of vegetation and root material.

3.05 DOWN SPOUT EXTENDER

A. Down spout extender shall have slope of approximately 1 percent. Use pipe diameter of 4 inches or as shown on the Drawings. Place pipe in accordance with Section 2317 - Bedding and Backfill for Utilities.

3.06 PIPE SLOPE DRAIN

A. Compact soil around and under drain entrance section to top of embankment in lifts appropriately sized for method of compaction utilized.

B. Inlet pipe shall have slope of 1 percent or greater. Use pipe diameter as shown on the Drawings.

C. Top of embankment over inlet pipe and embankments directing water to pipe shall be at least 1 foot higher at all points than top of inlet pipe.

D. Pipe shall be secured with hold-down grommets spaced 10 feet on centers.

E. Place riprap apron with a depth equal to pipe diameter with 2:1 side slopes.

3.07 PAVED FLUME

A. Compact soil around and under the entrance section to top of the embankment in lifts appropriately sized for method of compaction utilized.

B. Construct subgrade to required elevations. Remove and replace soft sections and unsuitable material. Compact subgrade thoroughly and shape to a smooth, uniform surface.

C. Construct permanent paved flumes in accordance with Drawings.

D. Remove sediment from riprap apron when sediment has accumulated to depth of one foot.

3.08 LEVEL SPREADER

A. Construct level spreader on undisturbed soil and not on fill. Ensure that spreader lip is level for uniform spreading of storm runoff.

B. Maintain at required depth, grade, and cross section as specified on Drawings. Remove sediment deposits as well as projections or other irregularities which will impede normal flow.

3.09 INLET PROTECTION BARRIER

A. Place sandbags for Stage I, Bagged gravel for Stage II and filter fabric barriers at locations shown on the SWP3. Maintain to allow minimal inlet in flow restrictions / blockage during storm event.

3.10 DROP INLET BASKET CONSTRUCTION METHODS

A. Fit inlet insert basket into inlet without gaps around insert at locations shown on the SWP3.

B. Support for inlet insert basket shall consist of fabricated metal as shown on Drawings.

C. Push down and form filter fabric to shape of basket. Use sheet of fabric large enough to be supported by basket frame when holding sediment and extend at least 6 inches past frame. Place inlet grates over basket/frame to serve as fabric anchor.

D. Remove sediment deposit after each storm event and whenever accumulation exceeds 1-inch depth during weekly inspections.

3.11 HAY BALE FENCE CONSTRUCTION METHODS

A. Place bales in row with ends tightly abutting adjacent bales. Place bales with bindings parallel to ground surface.

B. Embed bale in soil a minimum of 4 inches.

C. Securely anchor bales in place with Hay Bale Stakes driven through bales a minimum of 18-inches into ground. Angle first stake in each bale toward previously laid bale to force bales together.

D. Fill gaps between bales with straw to prevent water from channeling between bales. Wedge carefully in order not to separate bales.

E. Replace with new hay bale fence every two months or as required by Project Manager.

3.12 BRUSH BERM CONSTRUCTION METHODS

A. Construct brush berm along contour lines by hand placing method. Do not use machine placement of brush berm.

B. Use woody brush and branches having diameter less than 2-inches with 6-inches overlap. Avoid incorporation of annual weeds and soil into brush berm.

C. Use minimum height of 18-inches measured from top of existing ground at upslope toe to top of berm. Top width shall be 24 inches minimum and side slopes shall be 2:1 or flatter.

D. Embed brush berm into soil a minimum of 4-inches and anchor using wire, nylon or polypropylene rope across berm with a minimum tension of 50 pounds. Tie rope securely to 18-inch x 3/8-inch diameter rebar stakes driven into ground on 4-foot centers on both sides of berm.

3.13 STREET AND SIDEWALK CLEANING

A. Keep areas clean of construction debris and mud carried by construction vehicles and equipment. If necessary, install stabilized construction exits at construction, staging, storage, and disposal areas, following Section 01575-Stabilized Construction Exit.

B. In lieu of or in addition to stabilized construction exits, shovel or sweep pavements as required to keep areas clean. Do not waterhose or sweep debris and mud off street into adjacent areas, except, hose sidewalks during off-peak hours, after sweeping.

3.14 WASTE COLLECTION AREAS

A. Prevent water runoff from passing through waste collection areas, and prevent water runoff from waste collection areas migrating outside collection areas.

3.15 EQUIPMENT MAINTENANCE AND REPAIR

A. Confine maintenance and repair of construction machinery and equipment to areas specifically designated for that purpose, so fuels, lubricants, solvents, and other potential pollutants are not washed directly into receiving streams or storm water conveyance systems. Provide these areas with adequate waste disposal receptacles for liquid and solid waste. Clean and inspect maintenance areas daily.

B. Where designated equipment maintenance areas are not feasible, take precautions during each individual repair or maintenance operation to prevent potential pollutants from washing into streams or conveyance systems. Provide temporary waste disposal receptacles.

3.16 VEHICLE/ EQUIPMENT WASHING AREAS

A. Install wash area (stabilized with coarse aggregate) adjacent to stabilized construction access, as required to prevent mud and dirt run-off. Release wash water into drainage swales or inlets protected by erosion and sediment controls. Build wash areas following Section 01575- Stabilized Construction access. Install gravel or rock base beneath wash areas.

B. Wash vehicles only at designated wash areas. Do not wash vehicles such as concrete delivery trucks or dump trucks and other construction equipment at locations where runoff flows directly into waterways or storm water conveyance systems.

C. Locate wash areas to spread out and evaporate or infiltrate wash water directly into ground, or collect runoff in temporary holding or seepage basins.

3.17 WATER RUNOFF AND EROSION CONTROL

A. Control surface water, runoff, subsurface water, and water from excavations and structures to prevent damage to the Work, the site, or adjoining properties. Follow environment requirements.

B. Control fill, grading and ditching to direct water away from excavations, pits, tunnels, and other construction areas, and to direct drainage to proper runoff courses to prevent erosion, sedimentation or damage.

C. Provide, operate, and maintain equipment and facilities of adequate size to control surface water.

D. Retain existing drainage patterns external to the site by constructing temporary earth berms, sedimentation basins, retaining areas, and temporary ground cover as required to control conditions.

E. Plan and execute construction and earth work to control surface drainage from cuts and fills, and from borrow and waste disposal areas, to prevent erosion and sedimentation.

1. Hold area of bare soil exposed at one time to a minimum.

2. Provide temporary controls such as berms, dikes, and drains.

F. Construct fill and waste areas by selective placement to eliminate surface silts or clays which will erode.

G. Inspect earthwork periodically to detect start of erosion. Immediately apply corrective measures as required to control erosion.

H. Dispose of sediments offsite, not in or adjacent to waterways or floodplains, nor allow sediments to flush into streams or drainage ways. Assume responsibility for offsite disposal location.

I. Unless otherwise indicated, compact embankments, excavations, and trenches by mechanically blading, tamping, and rolling soil in maximum of 8-inch layers. Provide compaction density at minimum 90 percent Standard Proctor ASTM D-698-78 density. Make at least one test per 500 cubic yards of embankment.

J. Prohibit equipment and vehicles from maneuver on areas outside of dedicated rights-of-way and easements for construction. Immediately repair damage to erosion and sedimentation control systems caused by construction traffic.

K. Do not damage existing trees intended to remain.

3.18 REMOVAL OF CONTROLS

A. Remove erosion and sediment controls when the site is finally stabilized or as directed by Project Manager.

B. Dispose of sediments and waste products following Section 01505-Temporary Facilities.

END OF SECTION

Section 01575

STABILIZED CONSTRUCTION ACCESS

PART 1 G E N E R A L

1.01 SECTION INCLUDES

A. Installation and removal of erosion and sediment control for stabilized construction access used during construction and prior to final development of site, as shown in City of Houston Standard Construction details, DWG No. 01571-01.

1.02 MEASUREMENT AND PAYMENT

A. Unit Price Contracts. If Contract is Unit Price Contract, payment for work in this Section will be based on the following:

1. Stabilized construction roads, parking areas, access and wash areas: per square yard of aggregate/recycled concrete without reinforcing placed in 8-inch layers. No separate payment will be made for street cleaning necessary to meet TPDES requirements. Include cost of work for street cleaning under related Specification section.

B. Stipulated Price (Lump Sum) Contracts. If the Contract is a Stipulated Price Contract, include payment for work under this Section in the total Stipulated Price.

1.03 SUBMITTALS

A. Conform to requirements of Section 01330 - Submittal Procedures.

B. Submit manufacturer=s catalog sheets and other Product Data on geotextile fabric.

C. Submit sieve analysis of aggregates conforming to requirements of this Specification.

1.04 REFERENCES

A. ASTM D 4632 - Standard Test Method for Grab Breaking Load and Elongation of Geotextiles.

B. Storm Water Quality Management Handbook For Construction Activities prepared by the City of Houston, Harris County and Harris County Flood Control District.

PART 2 P R O D U C T S

2.01 GEOTEXTILE FABRIC

A. Provide woven or non-woven geotextile fabric made of polypropylene, polyethylene, ethylene, or polyamide material.

B. Geotextile fabric: Minimum grab strength of 200 lbs in any principal direction (ASTM D-4632) and equivalent opening size between 50 and 140.

C. Geotextile and threads: Resistant to chemical attack, mildew, and rot and contain ultraviolet ray inhibitors and stabilizers to provide minimum of six months of expected usable life at temperature range of 0 to 120 degrees F.

D. Representative Manufacturers: Mirafi, Inc. or equal.

2.02 COARSE AGGREGATES

A. Coarse aggregate: Crushed stone, gravel, crushed blast furnace slag, or combination of these materials. Aggregate shall be composed of clean, hard, durable materials free from adherent coatings of, salt, alkali, dirt, clay, loam, shale, soft or flaky materials, or organic and injurious matter.

B. Coarse aggregates to consist of open graded rock 2” to 8” in size.

PART 3 EXECUTION

3.01 PREPARATION AND INSTALLATION

A. Provide stabilized construction roads and access at construction, staging, parking, storage,
and disposal areas to keep street clean of mud carried by construction vehicles and equipment. Construct erosion and sediment controls in accordance with Drawings and Specification requirements.

B. Do not clear grub or rough cut until erosion and sediment control systems are in place, unless approved by Project Manager to allow soil testing and surveying.

C. Maintain existing construction site erosion and sediment control systems until acceptance of the Work or until removal of existing systems is approved by Project Manager.

D. Regularly inspect, repair or replace components of stabilized construction access. Unless otherwise directed, maintain stabilized construction roads and

access until the City accepts the Work. Remove stabilized construction roads and access promptly when directed by Project Manager. Discard removed materials off-site.

E. Remove and dispose of sediment deposits at designated spoil site for Project. If a spoil site is not designated on Drawings, dispose of sediment off-site at a location not in or adjacent to stream or flood plain. Assume responsibility for off-site disposal.

F. Spread compacted and stabilized sediment evenly throughout site. Do not allow sediment to flush into streams or drainage ways. Dispose of contaminated sediment in accordance with existing federal, state, and local rules and regulations.

G. Prohibit equipment and vehicles from maneuvering on areas outside of dedicated rights-of-way and easements for construction. Immediately repair damage to erosion and sediment control systems caused by construction traffic.

H. Conduct construction operations in conformance with erosion control requirements of Specification 01570 – Storm Water Pollution Control.

3.02 CONSTRUCTION MAINTENANCE

A. Provide stabilized access roads, subdivision roads, parking areas, and other on-site vehicle transportation routes where shown on Drawings.

B. Provide stabilized construction access and vehicle washing areas, when approved by Project Manager, of sizes and at locations shown on Drawings or as specified in this Section.

C. Clean tires to remove sediment on vehicles leaving construction areas prior to entering public right-of-ways. Construct wash areas needed to remove sediment. Release wash water into drainage swales or inlets protected by erosion and sediment control measures.

D. Details for stabilized construction access are shown on Drawings. Construct other stabilized areas to same requirements. Maintain minimum roadway widths of 14 feet for one-way traffic and 20 feet for two-way traffic and of sufficient width to allow ingress and egress. Place geotextile fabric as a permeable separator to prevent mixing of coarse aggregate with underlaying soil. Limit exposure of geotextile fabric to elements between laydown and cover to a maximum 14 days to minimize potential damage.

E. Grade roads and parking areas to provide sufficient drainage away from stabilized areas. Use sandbags, gravel, boards, or similar materials to prevent sediment from entering public right-of-ways, waterways or

storm water conveyance systems.

F. Inspect and maintain stabilized areas daily. Provide periodic top dressing with additional coarse aggregates to maintain required depth. Repair and clean out damaged control systems used to trap sediment. Immediately remove spilled, dropped, washed, or tracked sediment from public right-of-ways.

G. Maintain lengths of stabilized areas as shown on Drawings or a minimum of 50 feet. Maintain a minimum thickness of 8 inches. Maintain minimum widths at all points of ingress or egress.

H. Stabilize other areas with the same thickness, and width of coarse aggregate required for stabilized construction access, except where shown otherwise on Drawings.

I. Stabilized areas may be widened or lengthened to accommodate truck washing areas when authorized by Project Manager.

J. Clean street daily before end of workday. When excess sediments have tracked onto streets, Project Manager may direct Contractor to clean street as often as necessary. Remove and legally dispose of sediments.

K. Use other erosion and sediment control measures to prevent sediment runoff during rain periods and non-working hours and when storm discharges are expected.

END OF SECTION

Section 01576

WASTE MATERIAL DISPOSAL

PART 1 G E N E R A L

1.01 SECTION INCLUDES

A. Disposal of waste material and salvageable material.

1.02 SUBMITTALS

A. Conform to requirements of Section 01330 - Submittal Procedures.

B. Submit copy of approved "Development Permit", as defined in Chapter 19 of Flood Plain Ordinance (City Ordinance Number 81-914 and Number 85-1705), prior to disposal of excess material in areas designated as being in "100-year Flood Hazard Area" within the City. Contact the City of Houston Flood Plain Manager, 3300 Main Street, at (713) 525-7605 for flood plain information.

C. Obtain and submit disposal permits for proposed disposal sites, if required by local ordinances.

D. Submit copy of written permission from property owner, with description of property, prior to disposal of excess material adjacent to Project. Submit written and signed release from property owner upon completion of disposal work.

E. Describe waste materials expected to be stored on-site and a description of controls to reduce Pollutants from these materials, including storage practices to minimize exposure of materials to storm water; and spill prevention and response measures in the Project’s Storm Water Pollution Prevention Plan (SWPPP). Refer to Section 01410 – TPDES Requirements.

PART 2 P R O D U C T S - Not Used

PART 3 E X E C U T I O N

3.01 SALVAGEABLE MATERIAL

A. Excavated Material: When indicated on Drawings, load, haul, and deposit excavated material at location or locations shown on Drawings outside limits of Project.

B. Base, Surface, and Bedding Material: Load shell, gravel, bituminous, or other base and surfacing material designated for salvage into City trucks.

C. Pipe Culvert: Load culverts designated for salvage into City trucks.

D. Other Salvageable Materials: Conform to requirements of individual Specification Sections.

E. Coordinate loading of salvageable material on City trucks with Project Manager.

3.02 EXCESS MATERIAL

A. Remove and legally dispose of vegetation, rubble, broken concrete, debris, asphaltic concrete pavement, excess soil, and other materials not designated for salvage from job site.

B. Excess soil may be deposited on private property adjacent to Project when written permission is obtained from property owner. See Paragraph 1.02 D above.

C. Verify flood plain status of any proposed disposal site. Do not dispose of excavated materials in area designated as within 100-year Flood Hazard Area unless “Development Permit” has been obtained. Remove excess material placed in "100-year Flood Hazard Area" within the City, without “Development Permit", at no additional cost to the City.

D. Remove waste materials from site daily, in order to maintain site in neat and orderly condition.

END OF SECTION

Section 01578

CONTROL OF GROUND AND SURFACE WATER

PART 1 G E N E R A L

1.01 SECTION INCLUDES

A. Dewatering, depressurizing, draining, and maintaining trenches, shaft excavations, structural excavations and foundation beds in stable condition, and controlling ground water conditions for tunnel excavations.

B. Protecting work against surface runoff and rising floodwaters.

C. Trapping suspended sediment in the discharge form the surface and ground water control systems.

1.02 MEASUREMENT AND PAYMENT

A. UNIT PRICES

1. When noted, dewatering of trench or excavation during course of project shall be measured per linear foot and paid for at contract unit prices for dewatering, when directed to perform such work by Project Manager. Dewatering must be fully detailed in submittal and submittal must be approved prior to performing dewatering work before payment will be made for dewatering. No payment will be made for work unless directed to perform work by Project Manager.

2. Presence of a pump on project does not constitute dewatering for payment under bid item "Ground Water Control for Open Cut Construction."

3. Dewatering required during course of project to lower water table for other utility installation less than 24 inches in diameter, construction of structures, removal of standing water, surface drainage seepage, or to protect against rising waters or floods shall be considered incidental to Work unless otherwise noted.

4. No separate payment will be made for groundwater control associated with augering, tunnels or casing. Include cost in unit price for augering.

5. Refer to Section 01270 - Measurement and Payment for unit price procedures.

B. Stipulated Price (Lump Sum) Contract. If the Contract is a Stipulated Price Contract, include payment for work under this section in the total Stipulated

Price.

1.03 REFERENCES

A. ASTM D 698 - Standard Test Methods for Laboratory Compaction of Soils Using Standard Effort (12,400 ft-lbf/ft3 (600kN-m/m3)

B. Federal Regulations, 29 CFR Part 1926, Standards-Excavation, Occupational Safety and Health Administration (OSHA)

C. Storm Water Management Handbook for Construction Activities prepared by City of Houston, Harris County and Harris County Flood Control District.

1.04 DEFINITIONS

A. Ground water control system: system used to dewater and depressurize water-bearing soil layers.

1. Dewatering: lowering the water table and intercepting seepage that would otherwise emerge from slopes or bottoms of excavations, or into tunnels and shafts; and disposing of removed water. Intent of dewatering is to increase stability of tunnel excavations and excavated slopes, prevent dislocation of material from slopes or bottoms of excavations, reduce lateral loads on sheeting and bracing, improve excavating and hauling characteristics of excavated material, prevent failure or heaving of bottom of excavations, and to provide suitable conditions for placement of backfill materials and construction of structures and other installations.

2. Depressurization: includes reduction in piezometric pressure within strata not controlled by dewatering alone, necessary to prevent failure or heaving of excavation bottom or instability of tunnel excavations.

B. Excavation drainage: includes keeping excavations free of surface and seepage water.

C. Surface drainage: includes use of temporary drainage ditches and dikes and installation of temporary culverts and sump pumps with discharge lines necessary to protect Work from any source of surface water.

D. Monitoring facilities for ground water control system: includes piezometers, monitoring wells and flow meters for observing and recording flow rates.

1.05 PERFORMANCE REQUIREMENTS

A. Conduct subsurface investigations to identify groundwater conditions and to

provide parameters for design, installation, and operation of groundwater control systems. Submit proposed method and spacing of readings for review prior to obtaining water level readings.

B. Design ground water control system, compatible with requirements of Federal Regulations 29 CFR Part 1926 and Section 02260 - Trench Safety Systems, to produce following results:

1. Effectively reduce hydrostatic pressure affecting:

   a. Excavations

   b. Tunnel excavation, face stability or seepage into tunnels

2. Develop substantially dry and stable subgrade for subsequent construction operations

3. Preclude damage to adjacent properties, buildings, structures, utilities, installed facilities and other work

4. Prevent loss of fines, seepage, boils, quick condition, or softening of foundation strata

5. Maintain stability of sides and bottom of excavations

C. Provide ground water control systems that include single-stage or multiple-stage well point systems, eductor and ejector-type systems, deep wells, or combinations of these equipment types.

D. Provide drainage of seepage water and surface water, as well as water from other sources entering excavation. Excavation drainage may include placement of drainage materials, crushed stone and filter fabric, together with sump pumping.

E. Provide ditches, berms, pumps and other methods necessary to divert and drain surface water from excavation and other work areas.

F. Locate ground water control and drainage systems so as not to interfere with utilities, construction operations, adjacent properties, or adjacent water wells.

G. Assume sole responsibility for ground water control systems and for any loss or damage resulting from partial or complete failure of protective measures and settlement or resultant damage caused by ground water control operations. Modify ground water control systems or operations if they cause or threaten to cause damage to new construction, existing site improvements, adjacent property, adjacent water wells, or potentially contaminated areas. Repair damage caused by ground water control systems or resulting from

failure of system to protect property as required.

H. Install an adequate number of piezometers installed at proper locations and depths, necessary to provide meaningful observations of conditions affecting excavation, adjacent structures and water wells.

I. Install environmental monitoring wells at proper locations and depths necessary to provide adequate observations of hydrostatic conditions and possible contaminant transport from contamination sources into work area or ground water control system.

1.06 SUBMITTALS

A. Conform to requirements of Section 01330 - Submittals Procedures.

B. Submit Ground Water and Surface Water Control Plan for review by Project Manager prior to start of excavation work. Include the following:

1. Results of subsurface investigations and description of extent and characteristics of water bearing layers subject to ground water control

2. Names of equipment Suppliers and installation Subcontractors

3. Description of proposed ground water control systems indicating arrangement, location, depth and capacities of system components, installation details and criteria and operation and maintenance procedures

4. Description of proposed monitoring facilities indicating depths and locations of piezometers and monitoring wells, monitoring installation details and criteria, type of equipment and instrumentation with pertinent data and characteristics

5. Description of proposed filters including types, sizes, capacities and manufacturer's application recommendations

6. Design calculations demonstrating adequacy of proposed systems for intended applications. Define potential area of influence of ground water control operation near contaminated areas.

7. Operating requirements, including piezometric control elevations for dewatering and depressurization

8. Excavation drainage methods including typical drainage layers, sump pump application and other means

9. Surface water control and drainage installations

10. Proposed methods and locations for disposing of removed water

C. Submit following records upon completion of initial installation:

1. Installation and development reports for well points, eductors, and deep wells

2. Installation reports and baseline readings for piezometers and monitoring wells

3. Baseline analytical test data of water from monitoring wells

4. Initial flow rates

D. Submit the following records weekly during control of ground and surface water operations:

1. Records of flow rates and piezometric elevations obtained during monitoring of dewatering and depressurization. Refer to Paragraph 3.02, Requirements for Eductor, Well Points, or Deep Wells.

2. Maintenance records for ground water control installations, piezometers and monitoring wells

1.07 ENVIRONMENTAL REQUIREMENTS

A. Comply with requirements of agencies having jurisdiction.

B. Comply with Texas Commission on Environmental Quality regulations and Texas Water Well Drillers Association for development, drilling, and abandonment of wells used in dewatering system.

C. Obtain necessary permits from agencies with jurisdiction over use of groundwater and matters affecting well installation, water discharge, and use of existing storm drains and natural water sources. Since review and permitting process may be lengthy, take early action to obtain required approvals.

D. Monitor ground water discharge for contamination while performing pumping in vicinity of potentially contaminated sites.

PART 2 P R O D U C T S

2.01 EQUIPMENT AND MATERIALS

A. Select equipment and materials necessary to achieve desired results for dewatering. Selected equipment and materials are subject to review by Project Manager through submittals required in Paragraph 1.06, Submittals.

B. Use experienced contractors, regularly engaged in ground water control system design, installation, and operation, to furnish and install and operate educators, well points, or deep wells, when needed

C. Maintain equipment in good repair and operating condition.

D. Keep sufficient standby equipment and materials available to ensure continuous operation, where required.

E. Portable Sediment Tank System: Standard 55-gallon steel or plastic drums, free of hazardous material contamination.

1. Shop or field fabricate tanks in series with main inlet pipe, inter-tank pipes and discharge pipes, using quantities sufficient to collect sediments from discharge water.

PART 3 E X E C U T I O N

3.01 GROUND WATER CONTROL

A. Perform necessary subsurface investigation to identify water bearing layers, piezometric pressures and soil parameters for design and installation of ground water control systems. Perform pump tests, if necessary to determine draw down characteristics. Present results in the Ground Water and Surface Water Control Plan. submittal

B. Provide labor, material, equipment, techniques and methods to lower, control and handle ground water in manner compatible with construction methods and site conditions. Monitor effectiveness of installed system and its effect on adjacent property.

C. Install, operate, and maintain ground water control systems in accordance with the Ground Water and Surface Water Control Plan. Notify Project Manager in writing of changes made to accommodate field conditions and changes to Work. Provide revised drawings and calculations with notification.

D. Provide continuous system operation, including nights, weekends, and holidays. Arrange appropriate backup if electrical power is primary energy source for dewatering system.

E. Monitor operations to verify systems lower ground water piezometric levels at rate required to maintain dry excavation resulting in stable subgrade for

subsequent construction operations.

F. Depressurize zones where hydrostatic pressures in confined water bearing layers exist below excavations to eliminate risk of uplift or other instability of excavation or installed works. Define allowable piezometric elevations in the Ground Water and Surface Water Control Plan.

G. Removal of ground water control installations.

1. Remove pumping system components and piping when ground water control is no longer required.

2. Remove piezometers, including piezometers installed during design phase investigations and left for Contractor's use, upon completion of testing, as required in accordance with Part 3 of applicable specification.

3. Remove monitoring wells when directed by Project Manager.

4. Grout abandoned well and piezometer holes. Fill piping that is not removed with cement-bentonite grout or cement-sand grout.

H. During backfilling, maintain water level a minimum of 5 feet below prevailing level of backfill. Do not allow the water level to cause uplift pressures in excess of 80 percent of downward pressure produced by weight of structure or backfill in place. Do not allow water levels to rise into cement-stabilized sand until at least 48 hour after placement.

I. Provide uniform pipe diameter for each pipe drain run constructed for dewatering. Remove pipe drains when no longer required. If pipe removal is impractical, grout connections at 50-foot intervals and fill pipe with cement-bentonite grout or cement-sand grout after removal from service.

J. The extent of ground water control for structures with permanent perforated underground drainage systems may be reduced, for units designed to withstand hydrostatic uplift pressure. Provide a means to drain affected portions of underground systems, including standby equipment. Maintain drainage systems during construction operations.

K. Remove systems upon completion of construction or when dewatering and control of surface or ground water is no longer required.

L. Compact backfill to not less than 95 percent of maximum dry density in accordance with ASTM D 698.

M. Foundation Slab: Maintain saturation line at least 3 feet below lowest elevations where concrete is to be placed. Drain foundations in areas where

concrete is to be placed before placing reinforcing steel. Keep free from water for 3 days after concrete is placed.

3.02 REQUIREMENTS FOR EDUCTOR, WELL POINTS, OR DEEP WELLS

A. For aboveground piping in ground water control system, include a 12-inch minimum length of clear, transparent piping between each eductor well or well point and discharge header to allow visual monitoring of discharge from each installation.

B. Install sufficient piezometers or monitoring wells to show that trench or shaft excavations in water bearing materials are pre-drained prior to excavation. Provide separate piezometers for monitoring of dewatering and for monitoring of depressurization. Install piezometers and monitoring wells for tunneling as appropriate for selected method of work.

C. Install piezometers or monitoring wells at least one week in advance of the start of associated excavation.

D. Dewatering may be omitted for portions of under drains or other excavations, where auger borings and piezometers or monitoring wells show that soil is pre-drained by existing systems and that ground water control plan criteria are satisfied.

E. Replace installations that produce noticeable amounts of sediments after development.

F. Provide additional ground water control installations, or change method of control if, ground water control plan does not provide satisfactory results based on performance criteria defined by plan and by specifications. Submit revised plan according to Paragraph 1.06B.

3.03 SEDIMENT TRAPS

A. Install sediment tank as shown on approved plan.

B. Inspect daily and clean out tank when one-third of sediment tank is filled with sediment.

3.04 SEDIMENT SUMP PIT

A. Install sediment sump pits as shown on approved plan.

B. Construct standpipe by perforating 12 inch to 24-inch diameter corrugated metal or PVC pipe.

C. Extend standpipe 12 inches to 18 inches above lip of pit.

D. Convey discharge of water pumped from standpipe to sediment trapping device.

E. Fill sites of sump pits, compact to density of surrounding soil and stabilize surface when construction is complete.

3.05 EXCAVATION DRAINAGE

A. Use excavation drainage methods if well-drained conditions can be achieved. Excavation drainage may consist of layers of crushed stone and filter fabric, and sump pumping, in combination with sufficient ground water control wells to maintain stable excavation and backfill conditions.

3.06 MAINTENANCE AND OBSERVATION

A. Conduct daily maintenance and observation of piezometers or monitoring wells while ground water control installations or excavation drainage is operating at the site, or water is seeping into tunnels, and maintain systems in good operating condition.

B. Replace damaged and destroyed piezometers or monitoring wells with new piezometers or wells as necessary to meet observation schedules.

C. Cut off piezometers or monitoring wells in excavation areas where piping is exposed, only as necessary to perform observation as excavation proceeds. Continue to maintain and make specified observations

D. Remove and grout piezometers inside or outside of excavation area when ground water control operations are complete. Remove and grout monitoring wells when directed by Project Manager.

3.07 MONITORING AND RECORDING

A. Monitor and record average flow rate of operation for each deep well, or for each wellpoint or eductor header used in dewatering system. Also, monitor and record water level and ground water recovery. Record observations daily until steady conditions are achieved and twice weekly thereafter.

B. Observe and record elevation of water level daily as long as ground water control system is in operation, and weekly thereafter until Work is completed or piezometers or wells are removed, except when Project Manager determines more frequent monitoring and recording are required. Comply with Project Manager's direction for increased monitoring and recording and

take measures necessary to ensure effective dewatering for intended purpose.

3.08 SURFACE WATER CONTROL

A. Intercept surface water and divert it away from excavations through use of dikes, ditches, curb walls, pipes, sumps or other approved means. Requirement includes temporary works required to protect adjoining properties from surface drainage caused by construction operations.

B. Divert surface water and seepage water into sumps and pump it into drainage channels or storm drains, when approved by agencies having jurisdiction. Provide settling basins when required by agencies.

END OF SECTION

Section 01580

PROJECT IDENTIFICATION SIGNS

PART 1 G E N E R A L

1.01 SECTION INCLUDES

A. Project identification sign description.

B. Project sign installation.

C. Maintenance and removal of Project sign.

1.02 SYSTEM DESCRIPTION

A. Sign Construction: Construct signs of new materials in accordance with Standard Detail provided at the Pre-construction Conference.

B. Appearance: Maintain signs to present a clean and neat look throughout contract duration.

C. Sign Manufacturer: Experienced professional sign company.

D. Sign Placement: At locations shown in Drawings unless otherwise specified by Project Manager at pre-construction meeting.

1. Provide one sign at each end of a linear Project involving paving, overlay, sewer line, storm drainage, or water main construction located in rights-of-ways.

2. Provide one sign for site or building construction Contracts

3. Provide one sign at each site for Contracts with multiple sites.

4. Sign Relocation: As work progresses, relocate signs if directed by Project Manager in writing. Include cost for one relocation of post-mounted signs in Contract Price. Subsequent relocations, if directed by Project Manager in writing, will be subject to Change Order.

E. Skid-mounted signs: Use for projects with noncontiguous locations where work progresses from one location to another. Design skid structure to withstand a 60 mile-per-hour wind load to the face or back of sign using stakes, straps, or ballast. Contractor shall be responsible for security of signs at each site.

1.03 SUBMITTALS

A. Submit Shop Drawings under provisions of Section 01330 - Submittal procedures.

B. Show content, layout, lettering style, lettering size, and colors. Make sign and lettering to scale, clearly indicating condensed lettering, if used.

PART 2 P R O D U C T S

2.01 SIGN MATERIALS

A. Structure and Framing: Use new sign materials.

1. Sign Posts: 4-inch by 4-inch pressure treated wood posts, 9 feet long for skid mounting and 12 feet long minimum for in-ground mounting.

2. Skid Bracing: 2-inch by 4-inch wood framing material.

3. Skid Members: 2-inch by 6-inch wood framing material.

4. Fasteners:
   a. Galvanized steel.
   b. Attach sign to posts with 1/2-inch by 5-1/2 inch button head carriage bolts and secure with nuts and flat head washers.
   c. Cover button heads with white reflective film or paint to match sign background.
   d. Use metal brackets and braces and 3/4-inch wood screws to attach sign header.

B. Sign and Sign Header: 3/4-inch thick marine plywood. Use 4-foot by 8 -foot sheet for the sign and a single piece for the header to minimize joints. Do not piece wood sheets to fabricate sign face.

C. Paint and Primers: White industrial grade, fast-drying, oil-based paint with gloss finish for structural and framing members, sign, and sign header material surfaces. Paint all sign surfaces prior to adding adhesive applications.

D. Colors:

1. Sign Background: Reflective white 3M Scotchlite Engineer Grade, Pressure Sensitive Sheeting (White), or approved equal.

2. Border: For red border around area, which designates project name and project amount, use reflective red 3M Scotchlite Engineer Grade, Pressure Sensitive Sheeting (Red), or approved equal.

3. Sign Film: 3M Scotchcal Pressure Sensitive Films, or approved equal for legends, symbols, lettering, and artwork. Match colors to 3M Scotchcal Pressure Sensitive Films.

a.	Lettering Below Seal:	Black
b.	Lettering Above Project Name:	Vivid Blue
c.	Lettering on Blue Background:	White
d.	Background Behind Project Name:	Vivid Blue

E. City Seal: Project Manager will provide City seals to Contractor, as needed.

2.02 SIGN LAYOUT

A. Lettering:

1. Style, Size, and Spacing: Helvetica Regular lettering.

2. Condensed Style: Text may be condensed if needed to maintain sign composition.

B. Composition:

1. Lines with Standard Text
   a. Top line shall read “BUILDING TOGETHER FOR THE FUTURE”.
   b. Use lower left below City Seal to list names and titles for Mayor, Controller and Council Members. Place as shown on Drawings with indicated size and spacing.
   c. Center telephone number of the Customer Response Center, “311”, near the bottom of the area with the blue background.

2. Lines with Variable Text. Use blue background space for Project name and dollar amount.
   a. Project Manager will provide Project name and dollar amount of Project for preparation of sign. Center name on one or two lines, and dollar amount immediately below Project name, in area with blue background. Use condensed lettering if necessary.

2.03 LAYOUT AND COMPOSITION FOR HEADER

A. City of Houston Seal:
1. A space of approximately 24 inches in diameter is provided for the City seal, the top 6 inches of which extends above the sign on the sign header.

2. Construct sign header of same material as sign face. Cut material to match curve of the City seal.

3. Project Manager will provide the seal to be affixed to the sign by sign maker.

PART 3 E X E C U T I O N

3.01 INSTALLATION

A. Install Project identification signs within seven days after Date of Commencement of the Work.

B. Erect signs at locations shown in Drawings unless otherwise designated by Project Manager at pre-construction meeting. Position sign so it is fully visible and readable to general public.

C. Erect sign level and plumb.

D. If mounted on posts, sink posts 3 to 4 feet below grade and stabilize posts to minimize lateral motion. Leave a minimum of 8 feet of post above existing grade for mounting of sign.

E. Erect sign so that top edge of sign is at a nominal 8 feet above existing grade.

3.02 MAINTENANCE AND REMOVAL

A. Keep signs and supports clean. Repair deterioration and damage.

B. Remove signs, framing, supports, and foundations to a depth of at least 2 feet upon completion of Project. Restore area to a condition equal to or better than before construction.

PROJECT No.: **(FILE NO:)**	**CONTRACT No.:**	**REVIEWED BY:**

***INSTRUCTIONS TO SIGN MAKER** (LIST COMPANY NAME):		
QTY.	**ACTION ITEMS:**	
	Make new sign(s)	
	Follow City standards attached	
	Provide submittal (drawing) to the City for project sign showing content, layout, lettering style, lettering size, and colors	
VARIABLE TEXT		
Line 1	Project Name:	
Line 2	Project Amount (rounded to nearest $1000):	
ATTACHMENTS INCLUDED		
QTY.	**SEALS / LOGOS**	
	City of Houston - 24" diameter	
	STANDARDS	
	Standard Specification Section 01580 - Project Identification Signs	
	Standard Detail 01580-03 Construction Sign	

(*Instructions on reverse.)*

INSTRUCTIONS

Contractor produces this form. Contractor shall insert the information and provide the form to the sign maker with Contractor's purchase order.

List PROJECT No., (FILE No.), CONTRACT No., and name of City's Project Manager REVIEWED BY.

INSTRUCTIONS TO SIGN MAKER:

- Give COMPANY NAME of sign maker.
- Indicate QUANTITY of new signs to be made.
- Direction for sign maker to follow City Standards in making signs.
- Require submittals from sign maker, who provides Shop Drawing of Project sign showing content, layout, lettering style, lettering size, and colors.

VARIABLE TEXT:

- Give PROJECT NAME. Write it out in all caps and suggest line break. Lines are required.
- Give Project amount to be listed on sign. Round off to nearest $1000.

ATTACHMENTS INCLUDED:

- **Seals**

  City provides the quantity of City seals required one for each Project sign.

- **Standards**

  Contractor provides set of Standards to sign maker, including (Specification Section 01580 - Project Identification Signs, and Standard Detail No. 01580-03 - Construction Sign.

Section 01581

EXCAVATION IN PUBLIC WAY PERMIT SIGNS

PART 1 G E N E R A L

1.01 SECTION INCLUDES

A. Project sign installation.

B. Maintenance and removal of Project sign.

1.02 SYSTEM DESCRIPTION

A. Sign Construction: Construct signs of new materials.

B. Appearance: Maintain signs to present a clean and neat look throughout the Contract duration.

C. Sign Placement: Place signs at each street entrance to street cut excavation.

1.03 SUBMITTALS

A. Submit Shop Drawings under provisions of Section 01330 - Submittal Procedures.

B. Show content, layout, lettering style, lettering size and colors. Make sign and lettering to scale, clearly indicating condensed lettering, if used.

PART 2 P R O D U C T S

2.01 SIGN LAYOUT

A. Conform to Texas Manual on Uniform Traffic Control Devices. Minimum size: 36 inches by 36 inches.

B. Lettering: Uppercase Helvetica Regular lettering.

C. Composition: Include on sign copy of street cut permit, title “City of Houston”, contracting department’s name, address, and emergency telephone number and Contractor’s name. Project Manager will provide department name, address, and emergency telephone number for preparation of sign.

PART 3 E X E C U T I O N

3.01 INSTALLATION

A. Install Project signs before commencement of pavement excavation in Public Way.

B. Position sign so it is fully visible and readable to general public.

C. Erect sign level and plumb.

D. Erect sign so that top edge of sign is at a nominal 8 feet above existing grade.

3.02 MAINTENANCE AND REMOVAL

A. Keep signs and supports clean. Repair deterioration and damage.

B. Remove signs, framing, supports and foundations to depth of at least 2 feet upon completion of the Work. Restore area to condition equal to or better than before construction.

END OF SECTION

Section 01610

BASIC PRODUCT REQUIREMENTS

PART 1 G E N E R A L

1.01 SECTION INCLUDES

A. Requirements for transportation, delivery, handling, and storage of Products.

1.02 PRODUCTS

A. Products: Defined in Document 00700 – General Conditions. Does not include machinery and equipment used for preparation, fabrication, conveying and erection of the Work. Products may also include existing materials or components designated for reuse.

B. For material and equipment specifically indicated or specified to be reused in the work:

1. Use special care in removal, handling, storage and reinstallation, to assure proper function in completed work.

2. Arrange for transportation, storage and handling of products which require off-site storage, restoration or renovation. Include cost in unit price for related items.

C. When contract documents require that installation of work comply with manufacturer's printed Instructions, obtain and distribute copies of such instructions to parties involved in installation, including two copies to Project Manager. Maintain one set of complete instructions at job site during installation until completion.

D. Provide Products from the fewest number of manufacturers as practical, in order to simplify spare parts inventory and to allow for maximum interchangeability of components. For multiple components of the same size, type or application, use the same make and model of component throughout the Work.

1.03 TRANSPORTATION

A. Make arrangements for transportation, delivery, and handling of Products required for timely completion of the Work.

B. Transport and handle Products in accordance with manufacturer's instructions.

C. Consign and address shipping documents to proper party giving name of the Project and its complete street address. Shipments shall be delivered to

Contractor.

1.04 DELIVERY

A. Arrange deliveries of Products to accommodate short-term site completion schedules and in ample time to facilitate inspection prior to Installation. Avoid deliveries that cause lengthy storage or overburden of limit storage space.

B. Coordinate deliveries to avoid conflict with the Work and conditions at the site and to accommodate the following:

1. Work of other contractors or the City.

2. Limitations of storage space.

3. Availability of equipment and personnel for handling Products.

4. The City's use of premises.

C. Have Products delivered to the site in manufacturer's original, unopened, labeled containers.

D. Immediately upon delivery, inspect shipment to assure:

1. Product complies with requirements of the Contract.

2. Quantities are correct.

3. Containers and packages are intact; labels are legible.

4. Products are properly protected and undamaged.

1.05 PRODUCT HANDLING

A. Coordinate off-loading of Products delivered to the site. If necessary during construction, move and relocate stored Products at no additional cost to the City.

B. Provide equipment and personnel necessary to handle Products, including those provided by the City, by methods to prevent damage to Products or packaging.

C. Provide additional protection during handling as necessary to prevent breaking, scraping, marring, or otherwise damaging Products or surrounding areas.

D. Handle Products by methods to prevent over-bending or overstressing.

E. Lift heavy components only at designated lifting points.

F. Handle Products in accordance with manufacturer's recommendations.

G. Do not drop, roll, or skid Products off delivery vehicles. Hand-carry or use Suitable materials handling equipment.

1.06 STORAGAE OF PRODUCTS

A. Store and protect Products in accordance with manufacturer's recommendations and requirements of these Specifications.

B. Make necessary provisions for safe storage of Products. Place Products so as to prevent damage to any part of the Work or existing facilities and to maintain free access at all times to all parts of the Work and to utility service company installations in the vicinity of the Work. Keep Products neatly and compactly stored in locations that will cause minimum inconvenience to other contractors, public travel, adjoining owners, tenants, and occupants. Arrange storage in a manner so as to provide easy access for inspection.

C. Restrict storage to areas available on the site for storage of Products as shown on Drawings or approved by Project Manager.

D. Provide off-site storage and protection when on-site storage is not adequate. Provide addresses of, and access to, off-site storage locations for inspection by Project Manager.

E. Do not use lawns, grass plots, or other private property for storage purposes without written permission of owner or other person in possession or control of premises.

F. Protect stored Products against loss or damage.

G. Store in manufacturers' unopened containers.

H. Neatly, safely, and compactly stack Products delivered and stored along the line of the Work to avoid inconvenience and damage to property owners and general public, and maintain at least 3 feet clearance around fire hydrants. Keep public, private driveways and street crossings open.

I. Repair or replace damaged lawns, sidewalks, streets or other improvements to satisfaction of Project Manager. Total length that Products may be distributed along route of construction at one time is 1000 linear feet, unless otherwise approved in writing by Project Manager.

PART 2 P R O D U C T S - Not Used

PART 3 E X E C U T I O N - Not Used

END OF SECTION

Section 01630

PRODUCT SUBSTITUTION PROCEDURES

PART 1 G E N E R A L

1.01 SECTION INCLUDES

A. Options for making Product or process selections.

B. Procedures for proposing equivalent Products or processes, including pre-approved, pre-qualified, and approved Products or processes.

1.02 DEFINITIONS

A. Product: As defined in Document 00700 – General Conditions. Product does not include machinery and equipment used for production, fabrication, conveying, and erection of the Work. Products may also include existing materials or components designated for reuse.

B. Process: Any proprietary system or method for installing system components resulting in an integral, functioning part of the Work. For this Section, the word Products includes Processes.

1.03 SELECTION OPTIONS

A. Pre-approved Products: Construction products of certain manufacturers or Suppliers designated in Specifications as "pre-approved." The City maintains a list of pre-approved products. Pre-approved Products for this Project are designated as pre-approved in Specifications. Products of other manufacturers or suppliers are not acceptable for this Project and will not be considered under the submittal process for approving alternate products.

B. Pre-qualified Products: Construction products of certain manufacturers or Suppliers designated in Specifications as "pre-qualified." Pre-qualified Products for this Project are designated as pre-qualified in Specifications. Products of other manufacturers or suppliers are not acceptable for this Project and will not be considered under the submittal process for approving alternate products.

C. Approved Products: Construction products of certain manufacturers or Suppliers designated in Specifications followed by words "or approved equal." Approval of alternate products not listed in Specifications may be obtained through provisions for product options and substitutions in Document 00700 - General Conditions, and by following submittal procedures specified in

Section 01330- Submittal Procedures. The procedure for approval of alternate products is not applicable to pre-approved or pre-qualified products.

D. Product Compatibility: To the maximum extent possible, provide Products that are of the same type or function from a single manufacturer, make, or source. Where more than one choice is available, select Product that is compatible with other Products already selected, specified, or in use by the City.

1.04 CONTRACTOR'S RESPONSIBILITY

A. Responsibility related to Product options and substitutions is defined in Document 00700 - General Conditions.

B. Furnish information Project Manager deems necessary to judge equivalency of alternate Product.

C. Pay for laboratory testing, as well as any other review or examination costs, needed to establish equivalency between products in order to obtain information upon which Project Manager can base a decision.

D. If Project Manager determines alternate product is not equal to that named in Specifications, Furnish one of the specified Products.

1.05 CITY REVIEW

A. Use alternate Products only when approved in writing by Project Manager. Project Manager's determination regarding acceptance of proposed alternate Product is final.

B. Alternate Products shall be accepted if Products are judged by Project Manager to be equivalent to specified Product or to offer substantial benefit to the City.

C. The City retains the right to accept any Product deemed advantageous to the City, and similarly, to reject any product deemed not beneficial to City.

1.06 SUBSTITUTION PROCEDURE

A. Collect and assemble technical information applicable to the proposed Product to aid in determining equivalency as related to the approved Product specified.

B. Submit a written request for a construction Product to be considered as an alternate Product.

C. Submit Product information after the effective date of the Contract and within the time period allowed for substitution submittals given in Document 00700 - General Conditions. After the submittal period has expired, requests for alternate Products shall be considered only when specified Product becomes unavailable because of conditions beyond Contractor's control.

D. Submit five copies of each request for alternate Product approval. Include the following information:

1. Complete data substantiating compliance of proposed substitution with the Contract.

2. For Products:
   a. Product identification, including manufacturer's name and address.
   b. Manufacturer's literature with Product description, performance and test data, and reference standards.
   c. Samples, as applicable.
   d. Name and address of similar projects on which Product was used and date of installation. Include names of Owner, design consultant, and installing contractor.

3. For construction methods:
   a. Detailed description of proposed method.
   b. Drawings illustrating methods.

4. Itemized comparison of proposed substitution with Product or method specified.

5. Data relating to changes in Construction Schedule.

6. Relation to separate contracts, if any.

7. Accurate cost data on proposed substitution in comparison with Product or method specified.

8. Other information requested by Project Manager.

E. Approved alternate Products will be subject to the same review process as the specified Product would have been for Shop Drawings, Product Data, and Samples.

PART 2 P R O D U C T S - Not Used

PART 3 E X E C U T I O N - Not Used

END OF SECTION

Section 01725

FIELD SURVEYING

PART 1 G E N E R A L

1.01 QUALITY CONTROL

A. Conform to State of Texas laws for surveys requiring licensed surveyors. Employ a surveyor acceptable to Project Manager if required by the Contract.

1.02 MEASUREMENT AND PAYMENT

A. UNIT PRICES

1. No separate payment will be made for field surveying. Include cost in unit price for related items.

1.03 SUBMITTALS

A. Conform to requirements of Section 01330 - Submittal Procedures.

B. Submit name, address, and telephone number of Surveyor to Project Manager before starting survey work.

C. Submit documentation verifying accuracy of survey work on request.

D. Submit certificate signed by Surveyor, that elevations and locations of the Work are in conformance with the Contract.

1.04 PROJECT RECORD DOCUMENTS

A. Maintain a complete and accurate log of control and survey work as it progresses.

B. Prepare a certified survey setting forth dimensions, locations, angles, and elevations of construction and site work upon completion of foundation walls and major site improvements.

C. Submit record documents under provisions of Section 01785 - Project Record Documents.

1.05 EXAMINATION

A. Verify locations of survey control points prior to starting the Work.

B. Notify Project Manager immediately if any discrepancies are discovered.

1.06 SURVEY REFERENCE POINTS

A. The City will establish survey control datum as provided in Document 00700 - General Conditions and as indicated on Drawings. Inform Project Manager in Advance of time horizontal and vertical control points will be established so

verification deemed necessary by Project Manager may be done with minimum inconvenience to the City or Contractor.

B. Locate and protect survey control points prior to starting site work; preserve permanent reference points during construction.

C. Notify Project Manager a minimum of 48 hours before relocation of reference points is needed due to changes in grades or other reasons.

D. Promptly report loss or destruction of reference points to Project Manager.

E. Reimburse the City for cost of reestablishment of permanent reference points disturbed by construction operations.

1.07 SURVEY REQUIREMENTS

A. Utilize recognized engineering survey practices.

B. Establish a minimum of two permanent benchmarks on site, referenced to established control points. Record horizontal and vertical location data on Project record documents.

C. Establish elevations, lines and levels to provide quantities required for measurement and payment and for appropriate controls for the Work. Locate and lay out the following with appropriate instruments:

1. Site improvements including grading, fill and topsoil placement, utilities, and footings and slabs

2. Grid or axis for structures

3. Building foundation, column locations, and ground floor elevations

D. Periodically verify layouts.

PART 2 P R O D U C T S - Not Used

PART 3 E X E C U T I O N - Not Used

END OF SECTION

Section 01731

CUTTING AND PATCHING

PART 1 G E N E R A L

1.01 SECTION INCLUDES

A. Cutting, patching and fitting of the Work or work under construction. Coordinating Installation or connection of the Work to existing facilities, or uncovering work for access, inspection or testing and related submittals.

1.02 MEASUREMENT AND PAYMENT

A. UNIT PRICES

1. No separate payment will be made for cutting and patching. Include cost in unit price for related items.

1.03 CUTTING AND PATCHING

A. Perform activities to avoid interference with facility operations and work of others in accordance with Document 00700 - General Conditions of Contract.

B. Execute cutting and patching, including excavation, backfill and fitting to:

1. Remove and replace defective work or work not conforming to Drawings and Specifications;

2. Take samples of installed work as required for testing;

3. Remove construction required to provide for specified alterations or additions to existing work;

4. Uncover work to allow inspection or reinspection by Project Manager or regulatory agencies having jurisdiction;

5. Connect uninstalled work to completed work in proper sequence;

6. Remove or relocate existing utilities and pipes that obstruct work;

7. Make connections or alterations to existing or new facilities;

8. Provide openings, channels, chases and flues and cut, patch, and finish; if required; or

9. Provide protection for other portions of the Work.

C. Restore existing work to a condition equal to or better than that which existed Prior to cutting and patching, and to standards required by Specifications.

D. Support, anchor, attach, match, trim and seal materials to work of others. Unless otherwise specified, Furnish and Install sleeves, inserts, and hangers required for execution of the Work.

E. Provide shoring, bracing and support necessary to maintain structural integrity and to protect adjacent work from damage during cutting and patching. Request written approval from Project Manager, before cutting structural members such as beams, anchors, lintels, or other supports. Follow approved submittals, as applicable.

F. Match new materials to existing materials by bonding, lapping, mechanically tying, anchoring or other effective means in order to prevent cracks and to minimize evidence of patching. Conceal effects of demolition and patching by blending new construction to existing surfaces. Avoid obvious breaks, joints or changes of surface appearance unless shown on Drawings or authorized by Project Manager.

1.04 SUBMITTALS

A. Conform to requirements of Section 01330 - Submittal Procedures.

B. Submit a written request to Project Manager for consent to proceed, before conducting cutting operations that might affect structural integrity, design function, City operations, or work of another contractor.

C. Include the following in submittal:

1. Identification of Project

2. Description of affected work

3. Necessity for cutting

4. Effect on other work and on structural integrity

5. Describe the proposed work including:
   a. Scope of cutting and patching
   b. Contractor, Subcontractor or Supplier who will execute the work
   c. Proposed Products
   d. Extent of refinishing
   e. Schedule of operations

6. Alternatives to cutting and patching

D. When work conditions or schedules dictate the need for change of materials or methods, submit a written recommendation to Project Manager that includes:

1. conditions necessitating the change;

2. recommendations for alternative materials or methods; and

3. submittals required for proposed substitutions

E. Notify Project Manager in writing when work will be uncovered for observation. Do not begin cutting or patching operations until authorized by Project Manager.

1.05 CONNECTIONS TO EXISTING FACILITIES

A. Perform construction operations necessary to complete connections and tie-ins to existing facilities. Keep existing facilities in continuous operation unless otherwise permitted in the Specifications or approved in writing by Project Manager.

B. Coordinate interruption of service requiring connection to existing facilities with Project Manager. Do not bypass wastewater or sludge to waterways. Provide temporary pumping facilities to handle wastewater if necessary. Use temporary bulkheads to minimize disruption. Provide temporary power and piping to facilitate construction where necessary.

C. Submit a detailed schedule of proposed connections, including shut-downs and tie-ins. Include proposed time and date as well as anticipated duration of work. Coordinate the connection schedule with the construction schedule.

1. Submit specific times and dates to Project Manager at least 48 hours in advance of proposed work.

D. Procedures and Operations:

1. Operate existing pumps, valves and gates in required sequence under supervision of Project Manager. Do not operate valves, gates or other items of equipment without Project Manager's knowledge.

2. If possible, test equipment under operating conditions before making final tie-ins to connect equipment to existing facility.

3. Coordinate work and schedules. Notify Project Manger at least 48 Hours before shutdowns or bypasses are required.

PART 2 P R O D U C T S Not Used

PART 3 E X E C U T I O N Not Used

END OF SECTION

Section 01732

PROCEDURE FOR WATER VALVE ASSISTANCE

PART 1 G E N E R A L

1.01 SECTION INCLUDES

A. Operation of valves. City of Houston employees will operate existing valves. Contractor's employees may operate new valves included in the Project prior to acceptance by the City.

1.02 PROCEDURE

A. Perform activities listed in Exhibit A attached to this Section.

1.03 SUBMITTALS

A. Submit request for work order planning meetings in accordance with Exhibit A. Include information listed in Step 1 of Exhibit A, attached to this Section.

1.04 CANCELLATION

A. Contractor, Project Manager, or Public Utilities Division may cancel a scheduled valve assistance appointment at no extra cost or payment to Contractor. Contractor shall notify City's appointed Project Inspector ("Inspector") 24 hours in advance of cancellation. Inspector shall notify Central Operation Service (COS) immediately upon receipt of cancellation notice. Cancellation may be caused by bad weather, preparation work taking longer than anticipated, or unforeseen delays by one or more of the three parties.

PART 2 P R O D U C T S - Not Used

PART 3 E X E C U T I O N - Not Used

END OF SECTION

PAGE LEFT INTENTIONALLY BLANK

EXHIBIT A

PROCEDURE FOR VALVE ASSISTANCE

The following procedure will be used by Utility Maintenance Branch personnel when completing a service request from individual Contractors, through Inspector, for operation of existing water valves.

ROUTINE VALVE ASSISTANCE REQUEST (NON-EMERGENCY JOBS):

Step 1. a. When notified by Contractor, Inspector will schedule a work order planning meeting by calling Central Operation Service (COS) at **(713) 295-5521** and providing information shown below. The work order planning meeting shall be conducted a minimum of three days after the request; excluding weekends, holidays, inclement weather days, and the day of the call.

Location of Work (Street Intersection)	Project #
Project Description	Contractor (Company Name)
Job Superintendent's Name	Superintendent's Office #/Mobile #/Pager #
Contractor's Emergency Information	Name and Phone #/Mobile #/Pager #
Inspector/Senior Inspector	Name, Phone #/Mobile #/Pager #
Date & Time assistance is requested	

b. COS will create a work order for each wet connection, cut and plug, etc. that will be designated as a "Code 40" (Private Contractor).

c. COS will give Inspector the work order number. This work order number must be used as a reference in all communications regarding this request for Valve Assistance.

d. Valve personnel must have the work order number on their route sheet. When valve personnel arrive at the job site for the Work Order Planning Meeting between Inspector, Contractor, and Utility Maintenance valve personnel, they will verify the street intersection and work order number with the Inspector before beginning Work Order Planning Meeting.

e. During Work Order Planning Meeting, the work to be performed will be outlined and the actual date work will be performed will be mutually determined by Inspector, Contractor and City's Utility Maintenance Division valve personnel, based upon relevant factors such as preparatory work needed, customer requirements, etc.

f. Valve personnel will perform work specifically outlined in the work order requested. Also, Utility Maintenance Branch valve personnel will only operate existing water valves. Inspector must contact COS and request a new work order for additional work.

g. Valve personnel will contact the dispatcher and advise when the job is complete. Valve personnel will list all appropriate information on the Crew Activity Report.

Step 2. Should valve personnel not be able to keep an appointment to provide valve assistance, Utility Maintenance Branch will provide notification to appropriate Inspector by phone at least 24 hours prior, with that fact and rescheduling information, if available.

Step 3. Inspector will notify COS if valve personnel have not arrived at the site within 30 minutes of scheduled appointment. If Contractor is not ready when valve operator arrives to provide valve assistance, the City shall charge Contractor $50.00 per hour, starting 15 minutes after the scheduled appointment time, minimum one hour charge.

Step 4. Contractor will not be due delay claims or downtime if Utility Maintenance Branch has notified Inspector that they will not be able to provide valve assistance as scheduled.

Step 5. Test installed new valves in the presence of Inspector before substantial completion inspection is scheduled. Place new valves in open position on or before the Date of Substantial Completion.

Step 6. Project Manager will notify, in writing, Utility Maintenance Branch two months before the warranty expires to report any problems they have with new water lines. Project Manager will notify Contractor about these problems.

EMERGENCY REQUEST FOR VALVE ASSISTANCE PROCEDURE:

Step 1. When notified by Contractor, Inspector will request emergency Valve Assistance due to a broken line/service, etc. by calling COS at **(713) 295-5521** and providing the following information:

Location of Work (Street Intersection)	Project #
Project Description	Superintendent's Office #/Mobile #/Pager #
Contractor (Company Name)	Name and Phone #/Mobile #/Pager #
Job Superintendent's Name	Name, Phone #/Mobile #/Pager #
Contractor's Emergency Information	
Inspector/Senior Inspector	
Date & Time assistance is requested	

Step 2. COS will create an emergency work order number and describe the work to be performed.

Step 3. COS will give Inspector the emergency work order number. Reference work order number in all communications regarding request for Valve Assistance.

Step 4. COS will contact designated valve personnel and assign emergency work order. Dispatcher will follow standard COS procedures if this situation occurs after normal working hours.

Step 5. Valve personnel must have the emergency work order number on the route sheet. When valve personnel arrive at the job site for emergency work, they will verify the street intersection and emergency work order number with Inspector prior to beginning work requested for operating existing water valves. Valve personnel will coordinate verification of street intersection and work order number with Inspector prior to performing work.

Section 01740

SITE RESTORATION

PART 1 G E N E R A L

1.01 SECTION INCLUDES

A. Restoration of site affected by the Work in public or private property, including pavement, esplanades, sidewalks, driveways, fences, lawns and landscaping.

1.02 MEASUREMENT AND PAYMENT

A. Unit Prices.

1. Payment for restoration of Project site disturbed by utility construction operations is on a linear foot basis. Measurement will be as provided for corresponding utility in each Specification section. No separate payment made for branch pipe, valves and, other associated work for utilities. Measurement for restoration with multiple utilities within the same right-of-way will be on a linear foot basis for only one utility.

2. No separate payment made for facility or roadway projects. Include cost in the surface improvements associated with the facility or roadway construction.

3. Payment includes required site restoration within the right-of-way or easement regardless of size or type of pipe, method of construction, paved or unpaved areas or thickness and width of pavement.

4. No separate payment made for site restoration for service connections under this Section. Include cost in appropriate utility section.

5. Refer to Section 01270 – Measurement and Payment for Unit Price procedures.

B. Stipulated Price (Lump Sum) Contracts. If Contract is Stipulated Price Contract, include payment for work under this section in total Stipulated Price.

1.03 DEFINITIONS

A. Phase: Locations identified on the plans and listed in Section 1110 – Summary of Work under Work Sequence.

B. Site Restoration: Replacement or reconstruction of Site Improvements located in rights-of-way, easements, public property, and private property affected or altered by the Work.

C. Site Improvement: Includes pavement, curbs and gutters, esplanades, sidewalks, driveways, fences, lawns, irrigation systems, landscaping, and other improvements in existence at the Project site before commencement of construction operations.

1.04 SUBMITTALS

A. Conform to requirements of Section 01330 - Submittal Procedures.

B. Schedule of testing, service connections, abandonment, backfill, and site restoration.

C. Sample of notices to residents outlining their responsibility for maintenance of site improvements adjacent to the Project that are not disturbed by construction operations

1.05 SCHEDULING

A. Schedule testing, service connections, abandonment, backfill and site restoration immediately following completion of pipe laying work or paving within each block or line segment.

B. Phased Construction:

1. Commencement of subsequent Phase will follow scheduling of site restoration of prior Phase. Limit work to a maximum of two Phases of the project.

C. Construction of Projects with no Phases listed in Section 01110- Summary of Work:

1. Complete site restoration prior to disturbing over 50% of total project linear feet or 2,000 linear feet, whichever is greater, of right-of-way or easement.

2. Limit work to a maximum of 50% of total project linear feet or 2,000 linear feet, whichever is greater, of right-of-way and easement. Commence work in additional right-of-way or easement after completion of site restoration.

PART 2 P R O D U C T S

2.01 MATERIALS

A. Pavement, Sidewalks and Driveways: Materials specified in Section 02951 - Pavement Repair and Resurfacing.

B. Seeding and Sodding: Sod specified in Section 02922 - Sodding and Seed specified in Section 02921 - Hydromulch Seeding.

C. Trees, Shrubs and Plantings: Conform to requirements of Section 01562 – Tree and Plant Protection.

PART 3 E X E C U T I O N

3.01 Preparatory Work

A. Provide cleanup and restoration crews to work closely behind pipe laying and roadway construction crews, and where necessary, during testing, service restoration, abandonment, backfill and surface restoration.

B. Water Lines: Unless otherwise approved by Project Manager, comply with the following:

1. Once Project Manager approves work within a Phase, immediately begin preparatory work for disinfection effort.

2. No later than three days after completing disinfection preparatory work, submit to City appropriate request for disinfection.

3. If City fails to perform initial disinfection of lines in accordance with Section 2514 - Disinfection of Water Lines, within seven days from submission of appropriate request, and if approved by Project Manager, pipe laying operations may continue beyond approved limits until the City responds.

4. Immediately after transfer of services, begin abandonment of old water lines and site restoration.

C. Wastewater Lines:

1. Once Project Manager approves work within a Line Segment, immediately begin preparatory work for testing effort.

2. No later than three days after completing preparatory work for testing, initiate testing work.

3. Immediately after transfer of service connections, begin abandonment of old wastewater lines, and site restoration.

D. Street Construction and Paving Projects

1. Once Project Manager approves work within a Line Segment or block, immediately begin preparatory work for testing effort.

2. No later than three days after completing preparatory work for testing, initiate testing work.

3. Immediately after testing begin site restoration.

E. Street Construction and Paving Projects

1. Once Project Manager approves work within a block, immediately begin preparatory work for sidewalk construction, sodding and hydromulching and tree planting.

2. No later than seven days after completing preparatory work, initiate construction.

3.02 CLEANING

A. Remove debris and trash to maintain a clean and orderly site in accordance with requirements of General Conditions and Section 01576 - Waste Material Disposal.

3.03 LANDSCAPING AND FENCES

A. Seeding and Sodding.

1. Remove construction debris and level area with bank sand so that new grass surface matches level of existing grass and maintains pre-construction drainage patterns. Level and fill minor ruts or depressions caused by construction operations with bank sand, where grass is still viable.

2. Restore previously existing turfed areas with sod and fertilize in accordance with Section 02922 - Sodding. Sod to match existing turf.

3. Restore unpaved areas not requiring sodding with hydromulch seeding conforming to Section 02921 - Hydromulch Seeding.

B. Trees, Shrubbery and Plants.

1. Remove and replant trees, shrubs, and plants in accordance with requirements of Section 01562 – Tree and Plant Protection.

C. Fence Replacement.

1. Replace removed or damaged fencing to equal or better condition than existed prior to construction, including concrete footings and mow strips. Provide new wood posts, top and bottom railing and panels. Metal fencing material, not damaged by the Work, may be reused.

2. Remove and dispose of damaged or substandard material.

3.04 MAINTENANCE

A. Maintain shrubs, plantings, sodded areas and seeded areas.

B. Replace shrubs, plantings and seeded or sodded areas that fail to become established.

C. Refer to Section 01562 - Tree and Plant Protection, Section 02921 - Hydromulch Seeding and Section 02922 - Sodding for maintenance requirements.

END OF SECTION

Section 01755

STARTING SYSTEMS

PART 1 G E N E R A L

1.01 SECTION INCLUDES

A. Starting systems.

B. Demonstration and instructions.

C. Testing, adjusting and balancing.

PART 2 P R O D U C T S - Not Used

PART 3 E X E C U T I O N

3.01 PREPARATION

A. Coordinate schedule for start-up of various equipment and systems.

B. Notify Project Manager seven days prior to startup of each item.

C. Verify each piece of equipment or system has been checked for proper lubrication, drive rotation, belt tension, control sequence, or other damage-causing conditions.

D. Verify tests, meter readings, and specified electrical characteristics agree with those required by equipment or system manufacturer.

E. Verify wiring and support components for equipment are complete and tested.

F. Execute start-up under supervision in accordance with manufacturer's instructions.

G. When specified in individual Specification sections, require manufacturer to provide an authorized representative to be present at the site to inspect, check and approve equipment or system installation prior to start-up, and to supervise placing equipment or system in operation.

H. Submit written report indicating that equipment or system has been properly installed and is functioning correctly.

3.02 DEMONSTRATION AND INSTRUCTIONS

A. Demonstrate operation and maintenance of Products to Project Manager two weeks prior to Date of Substantial Completion.

B. Utilize O&M Manuals as the basis for instruction. Review contents of manual with Project Manager in detail to explain aspects of operation and maintenance.

C. Demonstrate start-up, operation, control, adjustment, trouble-shooting, servicing, maintenance, and shutdown of each item of equipment at agreed-upon times, at the equipment location.

D. Prepare and insert additional data in O&M Manuals when the need for additional data becomes apparent during instruction.

E. At a minimum, Contractor will demonstrate the following:

1. Products and procedures to be used in maintaining various surfaces, e.g., counter tops, toilet partitions, tile floors and carpeting;

2. procedures to set and maintain landscape irrigation system;

3. procedures to set and maintain security and fire alarm systems; and

4. procedures to set and maintain HVAC systems.

3.03 TESTING, ADJUSTING AND BALANCING

A. Contractor shall appoint, employ and pay for the services of an independent firm to perform testing, adjusting and balancing.

B. Submit reports by the independent firm to Project Manager describing observations and results of tests and signifying compliance or non-compliance with specified requirements and requirements of the Contract.

END OF SECTION

Section 01770

CLOSEOUT PROCEDURES

PART 1 G E N E R A L

1.01 SECTION INCLUDES

A. Procedures to establish Date of Substantial Completion.

B. Closeout procedures for final submittals, O&M data, warranties, spare parts and maintenance materials.

C. Texas Department of Licensing and Regulation (TDLR) inspection for Texas Accessibility Standards (TAS) compliance.

1.02 SUBSTANTIAL COMPLETION

A. Comply with Document 00700 - General Conditions regarding Date of Substantial Completion when Contractor considers the Work, or portion thereof designated by Project Manager, to be substantially complete.

B. Insure the following items have been completed when included in the Work, prior to presenting a list of items to be inspected by Project Manager for issuance of a Certificate of Substantial Completion:

1. cutting, plugging, and abandoning of water, wastewater, and storm sewer lines, as required by Contract documents for each item;

2. construction of, and repairs to, pavement, driveways, sidewalks, and curbs and gutters;

3. sodding and hydromulch seeding, unless waived by Project Manager in writing;

4. general clean up including pavement markings, transfer of services, successful testing and landscape;

5. additional requirements contained in Section 01110 - Summary of Work.

C. Assist Project Manager with inspection of Contractor's list of items and complete or correct the items, including items added by Project Manager, within specified time period.

D. Should Project Manager's inspection show failure of Contractor to comply with requirements to obtain Date of Substantial Completion, including those items in Paragraph 1.02 B. of this section, Contractor shall complete or correct the items, before requesting another inspection by Project Manager.

1.03 CLOSEOUT PROCEDURES

A. Comply with Document 00700 - General Conditions regarding final completion and final payment when the Work is complete and ready for Project Manager's final inspection.

B. Provide Project Record Documents in accordance with Section 01785 - Project Record Documents.

C. Complete or correct items on punch list, with no new items added. Address new items during warranty period.

D. The City will occupy portions of the Work as specified in other sections.

1.04 FINAL CLEANING

A. Execute final cleaning prior to final inspection.

B. For facilities, clean interior and exterior glass and surfaces exposed to view; remove temporary labels, stains and foreign substances, polish transparent and glossy surfaces, vacuum carpeted and soft surfaces.

C. Clean equipment and fixtures to sanitary condition.

D. Clean or replace filters of operating equipment.

E. Clean debris from roofs, gutters, down spouts, and drainage systems.

F. Clean site; sweep paved areas, and rake clean landscaped surfaces.

G. Remove waste and surplus materials, rubbish, and temporary construction facilities from site following final test of utilities and completion of the Work.

1.05 ADJUSTING

A. Adjust operating equipment to ensure smooth and unhindered operation. Value of this testing and adjusting is five percent of Lump Sum Price in the Schedule of Values for item being tested.

1.06 OPERATION AND MAINTENANCE DATA

A. Submit O&M data as noted in Section 01330 - Submittal Procedures.

B. Five percent of lump sum amount of each piece of equipment as indicated in Schedule of Unit Price Work or Schedule of Values will be paid after the required O&M data submittals are received and approved by Project Manager.

1.07 WARRANTIES

A. Provide one original of each warranty from Subcontractors, Suppliers, and manufacturers.

B. Provide Table of Contents and assemble warranties in a 3-ring/D binder with durable plastic cover.

C. Submit warranties prior to final progress payment.

D. Warranties shall commence in accordance with the requirements in Document 00700 - General Conditions.

1.08 SPARE PARTS AND MAINTENANCE MATERIALS

A. Provide Products, spare parts, maintenance and extra materials in quantities specified in individual Specification sections.

B. Deliver to a location within the City limits as directed by Project Manager. Applicable items must be delivered prior to issuance of a final Certificate for Payment.

PART 2 P R O D U C T S - Not Used

PART 3 E X E C U T I O N - Not Used

END OF SECTION

SECTION 01782 (Large Diameter)

OPERATIONS AND MAINTENANCE PERSONNEL INSTRUCTION

PART 1 GENERAL

1.01 SECTION INCLUDES

A. Requirements of services of manufacturer-approved factory-trained maintenance specialist to instruct City's operations and maintenance personnel in recommended corrective and preventive maintenance procedures for equipment as specified in respective equipment section.

1.02 MEASUREMENT AND PAYMENT

A. No separate payment will be made for work performed under this section. Include cost of such training, instruction material, submittals and resubmittals in contract unit prices for items listed in bid form for which equipment is a part.

1.03 REQUIREMENTS

A. Qualifications of specialist to be subject to approval by City's representative.

B. Responsible for coordinating these services at times acceptable to Engineer, with a minimum of 30 days' prior notice.

C. Provide combination of classroom and/or field training. Conduct all training at City of Houston facilities in Houston, Texas.

D. Training sessions may be videotaped by City. Taped sessions are property of City and City retains right to use tapes for training of City of Houston personnel.

E. Schedule training for particular item or system after complete installation and testing for that item or system. Submit training schedules to Engineer for approval.

F. Minimum requirements for training are as shown by item/system and unless otherwise noted elsewhere minimum number of training hours to be provided is 4 per item/system. Hours shown are actual "instruction hours" (classroom or demonstrations) irrespective of number of people attending training session. Additional training requirements may be specified in other sections of specifications.

1.04 SUBMITTALS

A. Submit all items required within this section in accordance with Section 01330 - Submittals.

B. Submit for approval a proposed Lesson Plan for instruction 30 days prior to commencement of scheduled training.

C. Submit for approval credentials of designated maintenance instructor. Credentials will include resume and specific details of instructor's experience with maintenance of and training on items specified.

D. Operation and Maintenance Data: In addition to specific data required by various sections of specifications, provide following information for each piece of equipment which requires periodic maintenance:

1. Manufacturer's Data:

   a. Name and description.

   b. Size and/or model number.

   c. Manufacturer's name, address and telephone number.

   d. Supplier's name, address and telephone number.

   e. All equipment serial numbers.

2. Nameplate Data: Supply all applicable information for each piece of equipment listed in paragraph above.

   a. Volts.

   b. Amps.

   c. Watts.

   d. Phases.

   e. Hertz.

   f. Frame.

   g. Type.

   h. PSI.

   i. Other pertinent information.

3. Manufacturer's operations, maintenance and repair literature and other information. Provide following information as a minimum:

   a. Manufacturer's recommended preventive maintenance procedures and maintenance intervals. Give maintenance intervals in terms of both calendar time and operation time.

   b. Parts Information:

      1) Exploded-view assembly drawing(s) of equipment. Clearly show all parts including maintainable subassembly parts in drawing(s). Consider all subassemblies maintainable unless City acknowledges in writing that subassembly is disposable. Identify all parts with number or letter which references Parts List Table described in section 2) below.

      2) A Parts List Table which includes all of the following information:

         a) Part reference number or letter from the exploded-view drawing.

         b) Brief description of part.

         c) Manufacturer's part number/drawing reference number.

         d) Standard part description when applicable, i.e. 1/2-inch hex head bolt.

         e) Quantity of each part contained in equipment, assembly or subassembly.

         f) Manufacturer's recommendation for stocking of spare parts for each item in Parts List Table.

   c. Special Tools: List any special tools and/or equipment required to comply with manufacturer's recommended maintenance instructions.

   d. Overhaul Procedures: Provide step-by-step procedures by manufacturers for complete disassembly, overhaul and reassembly of equipment.

   e. Operating Procedures: Provide detailed information on following:

      1) Pre-startup checkout procedure.

      2) Startup procedures.

      3) During operation checks and procedures.

4) Shutdown procedures for following:

a) Routine shutdown.

b) Emergency shutdown.

c) Extended shutdown.

f. Safety precautions.

g. Comprehensive troubleshooting guide.

h. Electrical and instrumentation wiring diagrams.

i. Test data and performance curves.

4. Assemble required manufacturer's information in logical format. Provide Items 1 through 3 in tabular form for each piece of equipment. Provide cross references to manufacturer data submittals as required by Section 01340 - Shop Drawings, Product Data and Samples. All information to be 8-1/2" x 11" or 11" x 17" in size and of quality suitable for reproductions. Items submitted by the Contractor which do not produce an acceptable quality reproduction will be returned for resubmittal All information shall be bound in a suitable hard-covered, weatherproof binder. Provide six copies of above information.

5. Contractor, by way of his bid, acknowledges that any or all of above Operation and Maintenance submittal requirements may be more extensive and more detailed than what Contractor typically supplies. However, it is understood that, in case of any piece of equipment requiring periodic maintenance, NO PAYMENT FOR SUPPLY, DELIVERY AND INSTALLATION OF SUCH EQUIPMENT WILL BE MADE UNTIL ALL REQUIREMENTS SPECIFICALLY NOTED IN THIS TECHNICAL SPECIFICATION RELATING TO OPERATION AND MAINTENANCE DATA HAVE BEEN COMPLIED WITH.

PART 2 PRODUCTS

2.01 INSTRUCTION LESSON PLAN

A. Proposed Lesson Plan to include elements presented in Outline of Instruction Lesson Plan in paragraph 2.01D. Specific components and procedures to be identified in proposed Lesson Plan.

B. Detail specific instruction topics in proposed Lesson Plan. Reference and attach, where applicable to proposed Lesson Plan, training aids to be utilized in instruction. Describe "hands-on" demonstrations planned for instruction in Lesson Plan.

C. Indicate estimated duration of each segment of training Lesson Plan.

D. Outline of Instruction Lesson Plan:

1. Equipment Operation:

a. Describe equipment's operating function.

b. Describe equipment's fundamental operating principals and dynamics.

c. Identify equipment's mechanical, electrical and electronic components and features.

d. Identify all support equipment associated with operation of subject equipment (i.e., valve operators, anodes, test stations).

2. Detailed Component Description:

a. Identify and describe in detail each component's function.

b. Where applicable, group related components into subsystem. Describe subsystem functions and their interaction with other subsystems.

c. Identify and describe in detail equipment safeties and control interlocks.

3. Equipment Preventive Maintenance (PM):

a. Describe PM inspection procedures required to:

1) Perform an inspection of equipment in operation.

2) Spot potential trouble symptoms (anticipate breakdowns).

3) Forecast maintenance requirements (predictive maintenance).

b. Define recommended PM intervals for each component.

c. Provide lubricant and replacement part recommendations and limitations.

d. Describe appropriate cleaning practices and recommended intervals.

4. Equipment Troubleshooting:

a. Define recommended systematic troubleshooting procedures.

b. Provide component specific troubleshooting checklists.

c. Describe applicable equipment testing and diagnostic procedures to facilitate troubleshooting.

5. Equipment Corrective Maintenance:

a. Describe recommended equipment preparation requirements.

b. Identify and describe use of any special tools required for maintenance of equipment.

c. Describe component removal/installation and disassembly/ assembly procedures.

d. Perform at least two "hands-on" demonstrations of common corrective maintenance repairs.

e. Describe recommended measuring instruments and procedures, and provide instruction on interpreting alignment measurements, as appropriate.

f. Define recommended torquing, mounting, calibration and/or alignment procedures and settings, as appropriate.

g. Describe recommended procedures to check/test equipment following a corrective repair.

6. Other items as contained in operation and maintenance manual, as defined in Section 01330 - Submittals.

2.02 TRAINING AIDS

A. Instructor shall incorporate training aids as appropriate to assist in instruction. Include text and figure handouts as a minimum in training aids. Other appropriate training aids are:

1. Audiovisual aids (e.g., films, slides, videotapes, overhead transparencies, posters, blueprints, diagrams, catalogue sheets).

2. Equipment cutaways and samples (e.g., spare parts, damaged equipment).

3. Tools (e.g., repair tools, customized tools, measuring and calibrating instruments).

B. Instructor shall utilize descriptive class handouts during instruction. Photocopied class handouts shall be good quality reproductions. Class handouts should accompany instruction with frequent reference made to them. Customized handouts developed especially for instruction are encouraged. Handouts planned for instruction shall be attached with manufacturer's proposed Lesson Plan.

PART 3 EXECUTION

3.01 "HANDS-ON" DEMONSTRATIONS

A. Manufacturer's instructor shall present at least two "hands-on" demonstrations of common corrective maintenance repairs for each scheduled group. Manufacturer shall provide tools and equipment to conduct demonstrations. Requests for supplemental assistance and facilities should be submitted with proposed Lesson Plan. Proposed "hands-on" demonstrations should be described in proposed Lesson Plan.

END OF SECTION

Section 01785

PROJECT RECORD DOCUMENTS

PART 1 G E N E R A L

1.01 SECTION INCLUDES

A. Maintenance and submittal of record documents and Samples.

1.02 MAINTENANCE OF DOCUMENTS AND SAMPLES

A. Maintain one record copy of documents at the site in accordance with Document 00700 - General Conditions.

B. Store record documents and Samples in field office, if a field office is required by the Contract, or in a secure location. Provide files, racks, and secure storage for record documents and Samples.

C. Label each document "PROJECT RECORD" in neat, large, printed letters.

D. Maintain record documents in a clean, dry, and legible condition. Do not use record documents for construction purposes. Do not use permit drawings to record Modifications to the Work.

E. Keep record documents and Samples available for inspection by Project Manager.

F. Bring record documents to progress review meetings for viewing by Project Manager and, if applicable, Design Consultant.

1.03 RECORDING

A. Record information legibly with red ink pen on a set of blueline opaque drawings, concurrently with construction progress. Maintain an instrument on site at all times for measuring elevations accurately. Do not conceal work until required information is recorded

B. Contract Drawings and Shop Drawings: Mark each item to record completed Modifications, or when minor deviations exist, the actual construction including:

1. Measured depths of elements of foundation in relation to finish first floor datum.
2. Measured horizontal locations and elevations of Underground Facilities and appurtenances, referenced to permanent surface improvements.

3. Elevations of Underground Facilities referenced to City of Houston benchmark utilized for the Work.

4. Measured locations of internal utilities and appurtenances concealed in construction, referenced to visible and accessible features of the Work.

5. Dimensions and details of field changes

6. Changes made by Modifications.

7. Details not on original Drawings.

8. References to related Shop Drawings and Modifications.

C. Survey all joints of water mains at the time of construction. Record on Drawings, water main invert elevation, elevation top of manway, and centerline horizontal location relative to baseline.

D. For large diameter water mains, mark specifications and addenda to record:

1. Manufacturer, trade name, catalog number and Supplier of each Product actually Installed.

2. Changes made by Modification or field order.

3. Other matters not originally specified.

E. Annotate Shop Drawings to record changes made after review.

1.04 SUBMITTALS

A. At closeout of the Contract, deliver Project record documents to Project Manager.

PART 2 P R O D U C T S - Not Used

PART 3 E X E C U T I O N - Not Used

END OF SECTION

Section 02221S

REMOVING EXISTING PAVEMENTS, STRUCTURES, WOOD, AND DEMOLITION DEBRIS

The following supplements modify Specification Section 02221 – Removing Existing Pavements, Structures, Wood, and Demolition Debris. Where a portion of the Specification or Detail is modified or deleted by this Supplementary Specification, the unaltered portions of the Specification shall remain in effect.

1.03 REGULATORY REQUIREMENTS: Add the following Paragraph C:

C. For removal of asbestos containing materials, or material that could potentially contain asbestos, comply with applicable provisions of OSHA 29 CFR 1926.1101 – Asbestos, OSHA 29 CFR 1926.32 – General Safety and Health Provisions, and EPA 40 CFR 61 Subpart M – National Emission Standard for Asbestos.

3.01 PREPARATION: Add the following Paragraph C:

C. For removal of asbestos containing materials, or materials that could potentially contain asbestos, comply with the following:

1. Crew members must be trained in accordance with OSHA 29 CFR 1926.1101 – Asbestos.
2. Conduct negative exposure assessment to demonstrate asbestos exposure below permissible exposure limit (PEL) in accordance with OSHA 29 CFR 1926.1101 – Asbestos and EPA 40 CFR 763 – Asbestos.
3. If negative exposure assessment not conducted, or if results are above PEL, provide respiratory protection in accordance with Paragraph 3.02 of this Section.

3.02 PROTECTION: Add the following Paragraph B:

B. When required, provide respiratory protection in accordance with OSHA 29 CFR 1910.134 – Respiratory Protection, and National Institute of Occupational Safety and Health (NIOSH).

3.03 REMOVALS: Add the following Paragraph G:

G. Labeling of Asbestos Cement (AC) Pipe:

1. Label leak-tight container with warning statement of hazardous asbestos content in accordance with OSHA 29 CFR 1926.1101 and as noted below.
2. Label waste material with following warning:

DANGER
CONTAINS ASBESTOS FIBERS
MAY CAUSE CANCER
CAUSES DAMAGE TO LUNGS
DO NOT BREATHE DUST
AVOID CREATING DUST

3. Neatly print labels in letters of sufficient size and contrast so label is easily visible and legible.

3.05 DISPOSAL: Add the following Paragraph C:

C. For asbestos-containing materials:

1. Comply with 40 CFR Part 61 and 30 TAC Sections 330.137(b) for Industrial Class 1 waste.
2. Inspect load to ensure correct packaging and labeling.
3. Line vehicles with two layers of 6-mil polyethylene sheeting.
4. Remove asbestos-containing waste from site daily.

END OF SUPPLEMENT

Approved by:

Mark L. Loethen, P.E., CFM, PTOE
City Engineer
Department of Public Works & Engineering

11/17/2012
Date

SECTION 02371(Large Diameter)

EROSION CONTROL AND VEGETATION MAT

PART 1 GENERAL

1.01 SECTION INCLUDES

A. Installation of erosion control and vegetation mat for disturbed areas that are seeded.

1.02 PAYMENT

A. No separate payment will be made for erosion control and vegetation mat. Include cost in unit price for regrading existing ditches.

1.03 DESCRIPTION

A. Mat shall cover newly seeded and fertilized ground, and shall be held in place with netting and staples driven into ground.

B. Mat shall assist in germination of grass seedlings and protect seedlings and establish vegetation.

C. Mat shall be specifically designed for use on steep slopes and other hard-to-hold problem areas.

D. Mat shall help ground retain moisture, control surface temperature fluctuations of soil, conform to terrain, protect seedlings against sun burnout, and break up raindrops to prevent erosion.

E. Wood fibers of blanket ultimately shall attach to soil, stabilize terrain, and act as mulch after vegetation has started.

F. Netting shall degrade in time in sunlight.

PART 2 PRODUCTS

2.01 MATERIALS

A. Erosion Blanket:

1. Machine produced mat consisting of 100 percent wood with 80 percent 6-inch or longer fiber length, with consistent thickness and fiber evenly distributed over entire area of blanket.
2. Topside of blanket shall be covered with 3/4-inch by 3/4-inch mesh of biodegradable netting.
3. Blanket shall be made smolder-resistant with use of chemical additives.

B. Staples:
1. 11-gauge biodegradable steel.
2. "U" shaped with legs 6 inches in length and 1-inch crown.

2.02 ACCEPTABLE PRODUCT

A. Standard Excelsior Erosion Control Blanket; Erosion Control Systems, Inc.

PART 3 EXECUTION

3.01 PREPARATION

A. Properly cultivate, seed and fertilize area to be covered in compliance with Section 02921 - Hydromulch Seeding.

B. Apply blanket immediately over prepared ground.

3.02 APPLICATION

A. Unroll blanket over prepared area; keep netting on top and fibers in contact with soil over entire area.

B. Apply blankets in ditches in direction of water flow.

C. Butt edges snugly (overlap maximum 2 inches) and fasten to ground with staples driven into ground.

D. Engage portion of netting with staple and set flush with soil surface.

E. Use average of 1 to 1-1/2 staples per yard and maximum of 1-1/2 feet distance between staples at ends. Follow stapling procedure as recommended by manufacturer.

F. Individual blanket size: 7.5 feet by 96 feet (80 square yards) with weight of 68 pounds plus or minus 1 pound.

END OF SECTION

Section 02425(Large Diameter)

TUNNEL EXCAVATION AND PRIMARY LINER FOR WATER MAINS

PART 1 GENERAL

1.01 SECTION INCLUDES

A. Tunnel construction operation with primary lined tunnel installed during tunnel drive followed by placement of water line inside tunnel after completion of tunnel construction. This Specification is intended to be primarily functional in nature and to define in general terms work to be accomplished. Contractor granted full discretion to select method of tunnel construction, subject to review by City Engineer.

1.02 MEASUREMENT AND PAYMENT

A. No separate payment will be made for other work performed under this Specification such as excavation, liner, grouting, or instrumentation. Include cost of such other work in contract unit prices for items listed in bid form for Section 02517 - Water Main in Tunnels.

B. Where such effort is necessary, cost for ground water control during course of tunnel work included in unit prices for water main in tunnel.

C. Ground water control required during course of Project to lower water table for other utility installation, to remove standing water, surface drainage seepage, or to protect ongoing work against rising waters or floods considered incidental to work being performed.

1.03 REFERENCE STANDARDS

A. The publications listed below form part of this specification to extent referenced. publications are referred to in text by abbreviations only.

1. AREMA Manual for Railway Engineering (Applicable sections).

2. American Association of State Highway and Transportation Officials (AASHTO).

3. American Society for Testing and Materials (ASTM).

   a. ASTM A36 - Standard Specifications for Carbon Structural Steel.

   b. ASTM A82 - Standard Specifications for Steel Wire, Plain, for Concrete Reinforcement.

c. ASTM A185 - Standard Specifications for Steel Welded Wire Fabric for Concrete Reinforcement.

d. ASTM A283 - Standard Specifications for Low and Intermediate Tensile Strength Carbon Steel Plates.

e. ASTM A307 - Standard Specifications for Carbon Steel Bolts and Studs, 60,000 PSI Tensile Strength.

f. ASTM A328 - Standard Specifications for Steel Sheet Piling.

g. ASTM A496 - Standard Specifications for Steel Wire, Deformed, for Concrete Reinforcement.

h. ASTM A615 - Standard Specifications for Deformed and Plain Billet-Steel Bars for Concrete Reinforcement.

i. ASTM C33 - Standard Specification for Concrete Aggregates.

j. ASTM C150 - Standard Specifications for Portland Cement.

4. American Water Works Association (AWWA)

a. AWWA C200 - Steel Water Pipe 6-inches and Larger.

5. Occupational Safety and Health Administration (OSHA): Particular attention is called to Subpart S of OSHA Standards (29 CFR 1926/1920), published as U.S. Department of Labor Publication 2207, Revised Oct. 1, 1979. Second revision dated August 1, 1989. See Federal Register dated June 2, 1989 for revised standard and commentary.

1.04 DEFINITION

A. Tunneling Work Plan defined as written description together with sketches, drawings, schedules, and other documents defining Contractor's planned methods and procedures to construct referenced item. Contractor's Construction Drawings defined as drawings by which Contractor proposes to furnish, construct, install, and operate referenced item. Submission of Tunneling Work Plans, including construction drawings, required for providing City Engineer sufficient details to verify that Contractor's planned work and work in progress is in accordance with intent of design and specification requirements.

B. Primary Liner defined as Contractor's initial construction liner and tunnel support installed by Contractor for ground stability and safety during construction preparatory to installation of water line. Contractor chooses method of construction in accordance with this Specification. Inclusion of various methods in specification or reviews by City Engineer of Contractor's

submittals shall not be construed by Contractor as endorsement by City Engineer that all such methods are constructible or will work for specific subsurface soils encountered.

C. Carrier Pipe is referred to as water line or permanent (secondary) liner. Such water line/permanent liner defined and installed in accordance with Section 02517 - Water Main in Tunnels or Section 02511 - Water Mains.

1.05 SUBMITTALS

A. Review: Conform to requirements of Section 01330 - Submittals Procedures. City Engineer will review submitted plans, details and data for compliance with requirements of Specification. Such review shall not be construed to relieve Contractor of responsibilities under Contract. Contractor shall not commence work on items requiring Contractor's work plan, construction drawings or other submittals until submittals have been reviewed and accepted by City Engineer. All structural designs and other engineered components signed and sealed by Professional Engineer registered in the State of Texas.

B. Tunneling: Submit for review Tunneling Work Plan with complete construction drawings, complete written description identifying details of proposed method of construction and sequence of operations to be performed during construction, as required by method of tunnel excavation and liner installation. Sufficiently detail construction drawings and descriptions detailed to demonstrate to City Engineer whether proposed materials and procedures will meet requirements of Specification.

1. Depending on Contractor's method of construction, submit Contractor's work plan and construction drawings on following items:

   a. If use of mechanized excavating equipment (such as TBM or shielded excavators) is proposed, submit arrangement drawings and technical specifications of machine and trailing equipment (included modifications), experience record with this type of machine of both Contractor and proposed operator and copy of manufacturer's operation manual for machine.

   b. The Contractor may elect to use tunnel shield that is separate from mechanized excavation equipment or for use with hand excavation. When use of tunnel shield is proposed, submit arrangement drawings, design criteria, dimensional data and method of excavation and operation of shield, including acceptable method for supporting, controlling and closing face of heading.

   c. Complete details of equipment, methods and procedures to be used for ground support, including but not limited to primary liner installation, timing of installation in relation to excavation plan, bulkheads and equipment.

   d. Grouting techniques meeting requirements this Section and Section 02431 - Tunneling Grout.

e. Procedures for measuring excavation quantities versus forward progress during tunneling operation (for earth pressure balance TBM only).

f. Method of controlling line and grade of excavation.

g. Details of muck removal, including equipment type, number and disposal location.

h. Description of ventilation system, lighting system, and electrical system.

i. Proposed contingency plans for critical phases and areas of tunneling.

2. Submit for review design criteria established by Contractor's Engineer for primary liner, including design calculations and installation details, and certification by qualified Engineer Registered in the State of Texas that structural design of primary tunnel meets criteria and specified requirements for range of field conditions.

3. Include in work plan special activities at critical utility crossings, or for work potentially effecting other facilities and existing installations, where special precautions must be taken during construction.

4. Submit for review layout and design of proposed access shafts and shafts for permanent installations in accordance with Section 02400 - Tunnel Shafts.

5. Ground water control system per requirements in this Section and in accordance with Section 01578 - Control of Ground Water and Surface Water, as required by construction method.

6. All structural designs and other engineered items signed and sealed by qualified Professional Engineer Registered in the State of Texas unless otherwise specified.

C. Quality Control Methods: At least 30 days prior to start of tunneling, submit description of quality control methods he proposes to use in this operation to City Engineer. Include in submittal:

1. Supervision: Supervisory control to ensure that work is performed in accordance with Drawings and Specifications and Contractor's work plan and construction drawings.

2. Line and Grade: Procedures for surveying, controlling and checking line and grade, including field forms for establishing and checking line, and grade.

3. Tunneling Observation and Monitoring: Procedures for preparing and submitting daily logs of tunneling operations, including field forms, to meet requirement of

Paragraphs 3.06, Tunneling Data and Paragraph 3.07, Control of Tunnel Line and Grade.

4. Monitoring Instrumentation: Conform to requirements of Paragraph 3.09A, Monitoring Instrumentation.

   a. Name of instrument installation subcontractors.

   b. Layout of instrumentation points.

   c. Procedures, forms and schedules for periodic submittals of readings.

5. Settlement Survey Plan, to meet requirements of Paragraph 3.09C, Settlement Surveying. This plan may be submitted as part of Instrumentation Monitoring Plan.

6. Building Condition/Assessment Plans: Conform to requirements of Paragraph 3.09B, Buildings and Structures Assessment.

D. Geotechnical and Environmental Investigation: Include results of geotechnical and environmental investigations performed by Contractor as relevant to tunneling in Work Plan.

E. Safety: Submit procedures to meet all applicable OSHA requirements including the following as minimum: Submit these procedures for record purpose only and they will not be subject to approval by City Engineer.

1. Protection against soil instability and ground water inflow.

2. Safety for shaft access and exit including ladders, stairs, walkways, and hoists.

3. Protection against mechanical and hydraulic equipment operations, and for lifting and hoisting equipment and material.

4. Ventilation, lighting, and communication systems.

5. Monitoring for hazardous gases.

6. Protection against flooding.

7. Means for emergency evacuation.

8. Protection of shaft including traffic barriers, accidental or unauthorized entry, and falling objects.

9. Emergency protection equipment and self-rescue equipment.

10. Safety supervising responsibilities.

1.06 DESIGN CRITERIA

A. Design primary liner for appropriate loading conditions, including but not limited to: overburden and lateral earth pressures, handling and installation stresses, loads imposed by tunnel shield or tunnel boring machine thrust jacks, subsurface soil and water loads, grouting, and all other conditions of service. Contractor responsible for design of primary liner to carry thrust of jacking or other construction forces or loads anticipated.

B. Use Cooper E-80 locomotive loading distributions in accordance with AREA specifications for culverts for criteria at railroad crossings. Account for additive loadings for multiple tracks in design. Provide liner type for railroad crossings as specified or as otherwise required by railroad authority. Acceptable monitoring devices, such as closed circuit television, which permit continuous monitoring of conditions at face by qualified observers, from outside tunnel, may be used.

C. Use HS-20 vehicle loading distributions for truck loading criteria in accordance with AASHTO.

D. Compatibility of Methods:

1. Use compatible methods of excavation, liner, and ground stabilization and ground water control.

2. Design primary lining, when used to provide thrust for propulsion of shield, to withstand this thrust without damage or distortion. Configure propulsion jacks on shield so that thrust is uniformly distributed and will not damage or distort primary liner.

3. Use compatible tunneling method with possible restrictions on work, such as influence on existing installations or potential ground water contamination.

1.07 JOB CONDITIONS

A. Safety Requirements:

1. Perform work in manner to maximize safety and avoid exposure of men and equipment to hazardous and potentially hazardous conditions, in accordance with applicable safety standards and Contractor's safety procedures.

2. Whenever there is emergency or stoppage of work which is likely to endanger tunnel excavation or adjacent structures, operate full work force for 24 hours day, including weekends and holidays, without intermission until potentially hazardous conditions no longer exist or jeopardize stability and safety of work or existing installations.

3. Perform tunnel construction in manner that will minimize movement of ground in front and surrounding tunnel. Prevent significant subsidence of surface and protect structures and utilities above, and in vicinity of, tunnel from damage.

4. Support ground continuously in manner to prevent loss of ground and keep perimeters and faces of tunnel and bottoms of shafts stable. Use filter-fabric and other means as necessary behind primary liner to prevent soil migration into tunnel.

B. Surveillance of Headings: When Contractor is not able to close face of machine because of maintenance requirements, maintain qualified personnel on duty to observe conditions that might threaten stability of heading whenever tunnel excavation is suspended or shut down. Equip personnel with approved contingency plan to take appropriate action to prevent or limit damage should conditions which threaten stability of heading occur.

C. Air Quality:

1. Conduct tunneling operations by methods and with equipment which will positively control dust, fumes, vapors, gases or other atmospheric impurities in accordance with OSHA, Federal, State and City requirements.

2. Provide approved mining instrumentation for testing quality of tunnel atmosphere and obtain samples, under working conditions, at prescribed intervals in accordance with above referenced requirements. Submit results of air quality tests to City Engineer.

D. Ground Conditions: Perform sufficient exploration by geotechnical and environmental borings in advance of construction to define necessary parameters for design of primary tunnel liner, planning and designing ground water control system, and for selection of tunneling method and equipment to successfully complete each tunnel reach. Present results of Contractor's geotechnical and environmental investigations in related work plans.

PART 2 PRODUCTS

2.01 GENERAL

A. Use of various construction methods for tunnel excavation and ground support, such as by tunnel boring machine (TBM), hand tunneling or shield will be allowed, provided it can be demonstrated to City Engineer that proposed method will complete Project in accordance with Specifications, this Section, applicable safety codes, and Project schedules.

1. Contractor's Engineer responsible for design of primary tunnel liner system.

2. Contractor responsible for final constructed product, materials and tools used, and for furnishing labor and qualified superintendents necessary for selected method of construction.

3. Demonstrate that chosen method will prevent flow of water or soil into tunnel and provide stability of face under anticipated conditions.

B. Use tunnel liner or casing of size so that minimum clearance between bottom of carrier pipe and inside of liner is minimum 4 inches, and minimum clearance between top of pipe and inside of liner or casing is in accordance with following:

Carrier Pipe Net I.D.	Minimum Clearance to Top
≥ 48"	9"
42"	7"
36"	5"
≤ 30"	3"

This clearance also applies to distance between carrier pipe and electrical conducting support system.

C. Furnish all items, such as TBM or shield with excavation equipment, spoil disposal systems, muck trains, hoist, grouting, signal systems, ventilation, safety equipment, and survey controls necessary to excavate and advance tunnel and construct primary tunnel liner by selected method.

2.02 LINER AND SUPPORTS

A. The primary tunnel liner may consist of steel ribs and lagging, steel liner plates, precast concrete segments, steel casing pipe, or combinations of these. Lagging may be timber or steel. Box tunnels with timber supports or steel sets with timber lagging may be constructed when ground conditions are suitable. Utilize additional support elements including shotcrete, additional steel sets, breasting, spilling, forepoling, crown bars, soil anchors, or fabrics, as required to provide safe, stable excavation.

B. Use steel liner plates, steel casing or steel lagging with steel ring beams as primary liner for tunneling under Texas Department of Transportation rights-of-way. Use steel casing as primary liner for tunneling under railroad rights-of-way. Timber lagging or timber falsework permitted in tunnels at other locations as shown on Drawings.

C. Use steel casing as primary liner for tunneling in fault zone crossings.

2.03 MATERIALS

A. Where use of following materials is required, conform to requirements of following minimum standards:

Material	Reference Standards
Cement	ASTM C150
Structural Concrete	See Section 03300
Reinforcing Steel Wire	ASTM A82 or A496
Reinforcing Steel Wire Fabric	ASTM A185 or A497
Reinforcing Steel Bars	ASTM A615, Grade 60
Sand and Aggregate	ASTM C33
Structural Steel	ASTM A36
Steel Piles, Sheets	ASTM A328
Rings and Ribs	ASTM A36
Steel Plates	ASTM A36 and A283
Lumber and Timber	Hardwood, sound or better, as defined by Commercial Standard C560
Steel Casing Pipe	AWWA C200

2 04 STEEL LINER PLATES

A. Except as otherwise specified, furnish materials according to applicable requirements of AREMA Manual for Railway Engineering.

B. Bolts and nuts: Conform to ASTM A307, Grade A. Use bolts no less than 1/2 inch in diameter for plate gauge 7 or thinner and no less than 5/8 inch in diameter for greater plate thicknesses.

C. Punch plates for bolting on both longitudinal and circumferential seams and fabricate to permit complete erection from inside tunnel. Use plates of uniform fabrication and use interchangeable plates for those intended for one size tunnel .

D. Use new material for construction of liner plates. City Engineer, at his option, may allow used plates provided that thickness of used plates after removal of rust is, at minimum, equal to thickness of new plates suitable for use on this Project; shape and dimensions meet acceptance tolerance for new plates; and used plates are free from other defects. City Engineer will determine acceptability of used plates.

E. Provide steel liner plates manufactured by Contech Construction Products (2-flange), Commercial Pantex Sika, Inc. (4-flange), or approved equal, and certified by manufacturer of compliance with specifications. Provide tensile strength, yield strength and minimum elongation of liner plates. Also, provide design calculations for either 2-or 4-flange liner

plates, as appropriate for Contractor's method of construction. All steel liner plate designs shall meet following minimum factors of safety:

Seam Strength	= 3
Buckling	= 2
Maximum Deflection	= 2% (of normal tunnel diameter)

F. Maintain minimum thickness of metal for these steel plates as shown on drawings, allowing for standard mill tolerances.

G. Equip steel liner plates with approximately 2-inch-diameter grout holes furnished with plugs. Locate holes near plate centers, such that when plates are installed there will be one line of holes along crown and along each side of tunnel, not more than 18 inches above invert. Locate holes in each line at no more than every other plate and stagger.

H. Protective coating not required for steel liner plates, unless otherwise specified or shown on Drawings.

I. Install gaskets between liner plates when required to control seepage, or as specified or shown in Drawings.

J. Steel ribs used with liner plates: Conform to requirements of Paragraph 2.05, Steel Beams and Lagging.

2.05 STEEL CASING PIPE

A. Casing pipe: Provide new uncoated welded steel pipe, manufactured in accordance with AWWA C200.

B. Design stress in pipe wall shall be 50 percent of minimum yield point of steel or 18,000 psi, whichever is less when subjected to loading conditions.

C. Design deflection to be used in determining wall thickness shall not exceed 3 percent of nominal casing pipe size.

D. Bedding constant to be used in determining wall thickness shall be 0.10. Lag factors shall be 1.0 for all live loads.

E. Minimum thickness of steel casing shall be as shown on drawing. When casing is installed without benefit of protective coating, and said casing is not cathodically protected, increase wall thickness shown on drawings to nearest standard size, which is minimum of 0.0633 inches greater than thickness shown except for diameters under 12-3/4 inches.

F. Casing pipe design shall also include stresses due to jacking forces when pipe is to be installed by jacking method.

G. Equip casing pipe with approximately 2-inch diameter grout holes furnished with plugs. Place holes in pattern so that each succeeding hole from top dead center is 60 degrees right, then 60 degrees left, then top dead center. Locate holes in each line no more than 9 feet apart.

H. Conform casing pipe used in fault zones to welding and weld testing requirements specified in Section 02502 - Steel Pipe and Fittings.

I. Casing pipe used in fault zones must be plugged at each end with clay bricks around O.D. of pipe minimum of one foot thickness measured into casing to prevent infiltration of soil into annular space.

2.06 STEEL BEAMS AND LAGGING

A. Steel ribs and auxiliary structural members shall be free of defects which may impair or reduce their structural integrity. Ribs shall be accurately curved to proper radius of tunnel section (or shaft section) and rib segments shall fit closely for bolted connections at segmental and transverse joints. Provide steel appurtenances required for installation of ribs such as tie road, bolts, splice plates, dutchmen and drift pins, with ribs.

B. Minimum factors of safety:

Buckling = 2
Stiffness = 3

2.07 FILTER FABRIC

A. See Section 02621 - Geotextile for requirements of material and minimum installation requirements. Install fabric, and backer rods, as required to prevent loss of fine-soil sediments into tunnel.

2.08 TIMBER

A. Use new timber for primary liner ground support without defects, of true dimensions and of quality grade and wood type defined by Contractor's Engineer.

PART 3 EXECUTION

3.01 PREPARATION

A. Contractor shall be responsible for his means and methods of tunneling construction and shall ensure safety of work, Contractor's employees, public, and adjacent property, whether public or private.

B. Execute work of excavating, lining, grouting, and construction of tunnel so that ground settlement or loss will be minimized. Completed primary tunnel lining shall have full bearing against earth with no voids or pockets left in work. Fill peripheral space between support elements and excavated surface no less frequently than after each shore or close by expanding support elements against ground as shield advances.

C. Maintain clean working conditions inside tunnel and remove muck, debris, material spills, unusable supports, and other material not required for tunneling.

D. Be aware that various existing soil borings, piezometers, or instrument wells may coincide with proposed tunnel alignment. These may or may not have been backfilled with grout and therefore caution should be used in tunneling through these existing borings. Take mitigating measures to counter effect these boreholes, piezometers, or instrument wells may have on tunneling operations.

E. Perform tunneling under railroad embankments, highways, or streets to prevent interference with operation of railroad, highways, or streets.

F. Do not perform any surface activities pertaining to water line construction within a tunnel area unless otherwise approved by City Engineer.

3.02 GROUND WATER CONTROL AND GROUND STABILIZATION

A. Provide necessary ground water control measures to perform work and to provide safe working conditions. Prevent excessive inflow of water into excavation during construction of tunnel and installation of carrier pipe and grouting of annular space. Ground water control method shall provide means to prevent piping of fines into shafts or tunnel and other adverse effects due to ground water inflow. Additional requirements are included in Section 01578 - Control of Ground Water and Surface Water. Other methods of construction, including tunnel work under compressed air, may be considered when Contractor is able to demonstrate that it will prevent flow of materials or water into tunnel excavation and allows construction of work to meet requirements of drawings and specifications. Additional requirements are included in Section 01578 - Control of Ground Water and Surface Water.

B. Anticipate that portions of tunnel excavation may be below ground water table and in cohesionless soils, even when not indicated on soil borings, and in conditions which may require ground water control system for tunneling operations. Install filter fabrics, backer-rods and other means as necessary to prevent piping of fines into tunnel. Remove water that may be encountered during course of work by pumping, well pointing, deep well pumping, or other means determined by Contractor as necessary to achieve stable conditions and applied in manner as described in Section 01578 - Control of Ground Water and Surface Water. Standing water not permitted at face, in tunnel or shafts.

C. The ground water control method used shall not cause damage to adjacent structures or property due to lowering of water table and subsequent ground settlement. In event damage does occur, correct damage and settle claims arising from damage.

D. If Contractor chooses pumping installations to control ground water level or installs pervious liner through water bearing layers, install and maintain instrumentation system to monitor water level and to detect movement in adjacent structures and property. Monitor water level by recording initial water level before dewatering is started and thereafter on weekly basis. Remove water monthly from piezometers to demonstrate that they are operable. Submit weekly reports of water levels to City Engineer. Provide access to piezometers for City Engineer to perform independent measurements.

E. Maintain dewatering system for tunnels in continuous operation until minimum of 48 hours after carrier pipe has been installed and annular space is fully grouted, or until watertight liner designed for hydrostatic pressures is installed.

F. If eductors, well points or deep wells are used, space them adequately to provide necessary dewatering. Use sand packing, and other means to prevent pumping of fine sands or silts from subsurface and to minimize ground subsidence. Check continuously to ensure that subsurface soil is not being removed by ground water control operation or subsurface drainage into shafts or through pervious liner. Before operations begin, maintain availability of pumping equipment and other machinery on site to assure that operation of dewatering system can be maintained.

G. When groundwater control is necessary, do not begin tunneling operations until monitoring data shows that it is safe to do so. When dewatering is sole means of ground water control, draw piezometric level at least down below elevation of invert of tunnel, or to lower elevation as required for excavation face and tunnel stability.

3.03 EQUIPMENT

A. Tunneling method or equipment which Contractor can demonstrate based on past experience will produce specified results for soils encountered will be considered. However, use tunneling method, whether hand or machine, with full-face closure capabilities.

B. Diesel, electrical, hydraulic, or air-powered equipment will be acceptable, subject to applicable Federal and State regulations. Diesel engines equipped with scrubbers are acceptable only when tunneling in free air with adequate ventilation. Provide compressed air and electricity for Contractor's operations from source outside tunnel.

C. Tunnel Boring Machine: When tunnel boring machine is used, employ equipment that will be capable of handling various anticipated ground conditions. In addition, TBM shall:

1. Be capable of minimizing loss of ground ahead of and around machine and providing satisfactory support of excavated face. Use TBM with, when necessary for ground control, earth-pressure balance or slurry-shield capabilities.

2. Conform to shape of tunnel with uniform perimeter that is free of projections that could produce over-excavation or voids. TBM shield shall be continuous around its full perimeter; open-bottom shield is not acceptable.

3. Have tail section long enough to enable setting of initial supports within machine, while still providing at least 12-inches of overlap beyond last installed support elements when thrusting jacks are extended to fullest extent possible.

4. Have propulsion jacks capable of moving machine in forward direction while maintaining construction tolerances with respect to line and grade, without damage to previously-installed tunnel supports. Design propulsion system so that in event of failure of any element of system, there is no movement backward and there is no overstressing or distortion of tunnel supports.

5. Incorporate seal in TBM tail shield to prevent leakage of grout between shield and liner into tunnel space, when grout is required immediately behind shield.

6. Have motors and operating controls protected against water inflow.

7. Provide bi-directional drive on cutter head wheel, or fins or grippers to control roll due to rotation.

8. Provide means for maintaining tunnel face under wet and adverse soil conditions. Use closure doors on cutter wheel or other means, such as earth-pressure balance or slurry shield, acceptable to City Engineer.

D. Tunnel Shield: tunnel shield is used (with or without attached mechanized excavating equipment),employ shield that will be capable of handling various anticipated ground conditions. In addition, shield shall:

1. Conform to shape of tunnel with uniform perimeter that is free of projections that could produce over excavation or voids. Appropriately sized overcutting bead or taper along length of shield may be provided to facilitate steering. Shield shall be continuous around its full perimeter; open bottom shield is not acceptable. Although it is recognized that capability to over excavate beyond perimeter of shield may be necessary under certain conditions, make provisions to prevent accidental over excavation.

2. Have hood, poling or breasting plates, shelves and breast jacks, breast tables, and combinations of these and other bracing as necessary to fully support face of tunnel excavation without loss of ground.

3. Have tail section long enough to enable setting of initial supports within shield while still providing at least 12-inches of overlap beyond last-installed support elements when shield has been pushed forward to fullest extent possible.

4. Have propulsion system for moving shield in forward direction, while maintaining construction tolerances with respect to line and grade, without damage to previously-installed tunnel support. Design propulsion system so that in event of failure of any element of system, there is no movement backward and there is no overstressing or distortion of tunnel supports.

5. Have motors and operating controls protected against water inflow.

6. Incorporate seal in tail of shield to prevent leakage of grout between shield and liner into tunnel space, when grout is required immediately behind shield.

E. Air Quality: Provide equipment to adequately ventilate entire tunnel operation during construction.

1. Provide portable testing equipment for carbon monoxide gas, hydrogen sulfide gas, oxygen deficiency, and explosive gases. Monitoring for other constituents may be required while tunneling in potentially contaminated areas as defined in Contractor's safety plan.

2. Provide audible automatic gas alarm on TBM to detect explosive gases Locate alarm near tunnel face.

3. Equip motors and controls with automatic shutoff methane monitoring system.

F. Lighting: Provide adequate lighting with lights at 50 feet, maximum spacing in tunnel. Fixtures shall be in watertight enclosures with suitable guards. Provide separate circuits for lighting and for electrical equipment.

G. Electrical: Equip electrical systems utilized on TBM with appropriate ground fault system. Electrical systems are to be insulated, not permitting bare-wire exposures.

H. Access: Provide safe access through tunnel to TBM.

1. Provide walkway in tunnels greater than 10 feet in diameter which is separate from tracks used by spoil removal equipment.

2. Equip locomotives or cars used for transport of personnel with necessary safety devices.

I. Necessary equipment for tunnel excavation includes telephones, signal systems, fire extinguishers, safety equipment, and other equipment required by Contractor's method of construction, work plan and safety plan. Maintain equipment in good repair, and readily available at place of work.

3.04 SHAFTS

A. Construction of Shafts: Conform work for all shafts, with or without permanent structures in them, to requirements of Section 02400 - Tunnel Shafts. Contractor responsible for selecting shaft locations in agreement with his planned method of tunneling and for sizing shafts.

3.05 TUNNEL EXCAVATION AND PRIMARY LINER INSTALLATION

A. Tunnel Excavation:

1. Methods of tunnel excavation at Contractor's option, subject to review of City Engineer.

2. Conduct tunneling operations in accordance with applicable safety rules and regulations, and Contractor's safety plan. Use methods which include due regard for safety of workmen, adjacent structures, utilities, and public.

3. Limit tunnel excavation to within easements and rights-of-way indicated on Drawings, and to lines and grades designated on Drawings. Perform excavation of sufficient size to allow installation of water line to lines and grades indicated on Drawings.

4. Locate equipment powered by combustible fuels at suitable distances from shafts to prevent possibility of explosion and fire in shafts or tunnel.

5. During open-face excavation:

a. Excavate face commencing at crown and proceed down to invert. Excavate both sides of heading simultaneously. Keep hood buried in soil ahead where soils include sands and silts.

b. Keep face breasted or otherwise supported; employ other means as necessary to maintain face stability and prevent falls, excessive ravelling, or erosion. Maintain standby face supports for immediate use when needed.

c. During shut-down periods, support face of excavation by positive means; do not rely solely on hydraulic pressure for support. When face is untouched for

more than 24 hours, and when required by City Engineer, fully breast face and shove shield tight against it.

6. During closed-face excavation:

   a. Carefully control and monitor volume of spoil removed. For earth-pressure balance TBM, balance spoil removed with advance rate and excavation rate.

   b. When cutting face is withdrawn, keep excavated face stabilized as required.

7. Advancing Shield: During forward movement of shield, provide sufficient support at excavation face to prevent movement of materials except materials as are physically displaced by elements of shield itself.

B. Size of Tunnel: Determine adequate tunnel size and section to match construction methods described in work plan. Build tunnels of sufficient size to permit efficient excavation operations, to provide sufficient working space for placing primary tunnel liner, and to allow for installation of water line as shown on Drawings or indicated in Specifications. Dimensions shown on Drawings represent minimum dimensions acceptable to City Engineer and do not necessarily represent size or section suitable for construction methods or operational procedures as may be proposed or conducted by Contractor.

C. Primary Liner:

1. Provide primary liner for tunnel which is capable of supporting ground, and hydrostatic forces until permanent water pipe has been installed and grouted in place, and to resist construction loads.

2. Use methods that ensure full bearing of soil against primary liner without significant settlement or movement of surrounding soil. To fill void behind primary liner, either expandable liner (e.g., ring beams and timber lagging) or nonexpandable liner (e.g., bolted steel liner plates) may be used provided grout is placed behind nonexpandable liner. Box tunnel where ground is excavated to true shape may be ungrouted. Grout excavation not to true shape as result of careless excavation or loss of ground.

3. The primary liner's seepage inflow for each 100-foot length of tunnel shall not exceed 3 gallons per minute, including inflow through face or shield. Localized inflow shall not exceed 0.5 gallons per minute. Provide drainage facilities to remove inflow of water from tunnels and shafts. Provide means to prevent inflow of soil fines associated with water inflow by use of filter fabrics or other approved methods.

4. Expandable liner shall be continuous and shall be expanded to limits of excavation promptly after it is out of shield.

5. During excavation of tunnel, advance TBM or shield only far enough to permit construction of one primary liner ring beam set, or rings of bolted steel liner plates that can be assembled entirely within tail shield of TBM.

6. Install filter fabric around exterior of primary liner when using non-watertight liner and when tunneling through sandy or silty ground conditions. Install backer rods at ribs as required to control migration of fines. Close windows in lagging.

7. Provide hog rods, struts or similar members when required to maintain roundness. After grouting liner shall be no more than 3 percent out of round as measured by difference between maximum and minimum measured diameter divided by average diameter.

D. Hand Jacking of Casing:

1. Provide heavy-duty jacks of capacity suitable for forcing casing pipe through ground. Construct operating jacks so that even pressure is applied to all jacks used. Provide suitable jacking head, (timber, etc.), and suitable bracing between jacks and jacking head. Provide suitable jacking frame and/or back stop. Set casing pipe to be jacked on guides, (timber, etc.), properly braced together, to support section of pipe and direct it to proper line and grade. Place whole jacking assembly so as to line up with direction and grade of casing pipe.

2. Excavate ground material just ahead of casing pipe by use of air-powered tools, excavating machine or other acceptable means, and remove through casing pipe. Then force casing pipe through ground with jacks, into space thus provided. Dispose excavated material as specified.

3. Trim excavation in manner so that at least one third of circumference of excavation conforms to contour and grade of casing pipe. Provide clearance of not more than 2 inches for upper half of casing pipe with clearance tapering off to zero at point where excavation conforms to contour of casing pipe. cutting edge of steel plate installed around head end of casing pipe extending short distance beyond end of casing pipe with inside angles or lugs to keep cutting edge from slipping back onto casing pipe may be used.

4. In addition to requirements set for in this specification, Contractor shall:

   a. Excavate face commencing at crown and proceed down to invert. Excavate heading so that both sides of heading are excavated simultaneously.

   b. At all times maintain standby face supports to allow for immediate use when needed.

c. At end of each shift and whenever excavation is suspended or shut down, install breast boards, or other approved methods, across full face of heading.

5. Distance that excavation extends beyond end of casing pipe shall not exceed three feet. Decrease this distance as directed by Engineer, or due to character of material being excavated.

6. The casing pipe, insofar as practical, jack from low or downstream end. Lateral or vertical variation in final position of casing pipe from line and grade as established by Engineer will be permitted only to extent of 1 inch in 10 feet, provided that variation is regular and only in one direction and that final grade of flow line is in direction indicated on plans. Remedy overcutting by pressure grouting entire length of installation. Use of grout mix immediately behind shield tail shall have efficient tail seal to prevent flow of grout into shield.

7. Depending on character of soil encountered during jacking operation, carry on operation without interruption, insofar as practical, to prevent casing pipe from becoming firmly set in ground.

8. Remove and replace casing pipe damaged in jacking operations by Contractor at no additional cost to Owner.

9. Backfill pits or trenches which have been excavated to aid jacking operations as soon as casing pipe is complete in place, equipment and appurtenances have been removed and structure, which is to be built in excavated zone, is in place. In no case shall pits remain open without appropriate safety barricades, concrete traffic barriers (CTB's), railing or plates.

10. When jacking casing pipe, water jetting of casing pipe bedding or backfill is not allowed. In unconsolidated soil formations, use gel-forming colloidal drilling fluid consisting of at least 10 percent of high grade fully hydrated bentonite to seal voids outside walls and furnish lubrication for installation of casing pipe.

E. Grouting:

1. Furnish and operate suitable equipment for grouting operations to effectively and completely fill voids outside of primary tunnel liner as quickly as possible.

2. Additional requirements pertaining to grout mix design and tunnel grouting are provided in Section 02431 - Tunneling Grout.

3. Provide in tunneling work plan description of primary liner grouting operations, including:

   a. Arrangement of grouting equipment including mixer, pumps, piping and hoses, valves, pressure gauges and injection fixtures.

   b. Location, spacing and size of grout ports and vents.

   c. Grouting sequence for initial backfill of voids between liner and ground, and for second stage back grouting.

   d. Grout injection pressures and estimated volumes.

   e. Procedure to check for remaining voids.

   f. Sampling procedures and locations for quality control testing.

   g. Grout production and quality shall be in accordance with Contractor's mix design and grout production plan as required by Section 02431 - Tunneling Grout.

4. Use care in grouting operations to prevent damage to adjacent utilities or other properties. Ensure that pressure used in grouting is not great enough to distort or imperil work.

5. Fill voids behind nonexpandable primary liner with sand-cement grout promptly after liner is out of shield. Grout pressure shall not exceed value that may cause damage or distortion to installed liner plate rings. Grout from bottom up and plug each grout hole promptly after grout has been placed. Provide seals on tail of TBM which will prevent grout from moving into shield.

6. Liner requiring grout shall be back grouted (second stage grouting) once each shift, or more often when required to ensure that all voids are filled.

7. Place grout behind tunnel liner at end of each day or at every 10 feet of tunnel installed, whichever is less, unless in opinion of Engineer, ground conditions are such as to require each ring to be grouted immediately after erection. Upon completion of each grouting operation, sound primary liner and immediately correct voids discovered by necessary means as approved by Engineer. After all voids are successfully filled, grout holes will be packed, when necessary, with dry mortar mix and threaded taps securely placed in holes.

8. Completely and immediately fill voids outside limits of tunnel excavation created by caving or collapse of earth cover over excavation, or by other cause, with sand cement

grout. Perform second grouting to fill soft spots or voids which may be detected, no later than 24 hours after initial grouting of primary liner.

9. Perform quality control sampling and testing of grout.

   a. Grout production shall be in accordance with Section 02431 - Tunneling Grout.

   b. Measure density of grout throughout placement procedure as directed by City Engineer. Measure grout density at discharge point and discharge grout until density is within 0.3 pounds per gallon of input density.

   c. Take samples of well-mixed grout for 28-day compressive strength tests at beginning, middle and end of each grouting operation.

3.06 TUNNELING DATA

A. Submit shift logs of construction events and observations within 24 hours of operation on at least following:

   1. Location of face by station and progress of tunnel drive during shift.

   2. Observation of lost ground and other signs of ground movement.

   3. Location and elevation of significant soil strata boundaries and brief soil descriptions.

   4. Ground water control operations, piezometric levels, ground water inflow location and rates.

   5. Completed field forms for establishing and checking line and grade and achieved tolerance relative to design alignment.

   6. Operation shut-down periods or other interruptions in work, and reason.

   7. Any unusual condition or event.

B. Clearly mark primary liner every 20 feet along tunnel with distance in feet from centerline of preceding shaft.

3.07 CONTROL OF TUNNEL LINE AND GRADE

A. Construction Control:

   1. The City Engineer will establish baseline and benchmarks indicated on Drawings. check these baseline and benchmarks at beginning of work and report errors or discrepancies to City Engineer.

2. Use baseline and benchmarks established by City Engineer to furnish and maintain reference lines and grades for construction. Use these lines and grades to establish location of tunnel, water line, and structures.

3. Establish and be fully responsible for accuracy of controls for construction of Project, including access shaft locations, structures, tunnel line, and grade. Utilize laser to insure line and grade are maintained during tunneling process.

4. Establish control points sufficiently removed from tunnel operation not to be affected by potential ground movement.

5. maintain daily surveying records of alignment and grade and submit three copies of records to City Engineer by end of day after work performed. Locate points at top, bottom and each side of springline.

6. check tunnel survey control against aboveground undisturbed reference at least once each week and once for each 250 feet of tunnel constructed, or more often as needed or directed by City Engineer.

B. Earth Movement: Contractor responsible for damages due to settlement from construction-induced activities or occurrences.

1. Take precautions to avoid damage or settlement to buildings, structures, roads, and utilities to work in proximity of tunnel. Minimum precautions to include use of construction methods and equipment to minimize loss of earth at tunnel face and settlement of soil around primary tunnel liner.

2. Refer to Paragraph 3.09, Monitoring for detecting earth movement.

3. In event movement of ground is detected, City Engineer may order work stopped and secured. Before proceeding, correct problems causing or resulting from movement.

4. Be aware that when settlement of ground surface should occur during construction of tunnel which will affect accuracy of temporary benchmarks established by City Engineer, detect and report movement. Locations of permanent City of Houston monumentation benchmarks are indicated on Drawings; Contractor may use these to verify temporary benchmark accuracy. Advise City Engineer of settlement affecting permanent monumentation benchmarks. Upon completion, submit field books pertaining to monitoring of permanent monumentation benchmarks to City Engineer.

C. Tunnel Line and Grade:

1. Survey crown, invert, and springline on each side of primary liner at 50-foot intervals, or minimum of once per shift, or more frequently when line and grade tolerances have

been exceeded, to ensure alignment is within tolerances specified. Conduct survey immediately behind tunnel excavation to allow immediate correction of misalignment.

2. When excavation is off line and grade, make corrections to plan line and grade at rate of 3 inches per 100 feet.

3. Control excavation of tunnel and construction of primary liner to allow construction of carrier pipe within 6 inches on line and 4 inches on grade and to maintain circular shape of tunnel.

4. Alignment adjustments between primary tunnel liner and water main shall not encroach on minimum required clearance of 4 inches defined in Section 02517 - Water Main in Tunnels.

5. If unable to maintain specified tolerances, bear full responsibility and expense of correction (redesign, easement acquisition, etc.). when these tolerances are exceeded and redesign of structures is required, obtain services of qualified Professional Engineer registered in the State of Texas for redesign. Submit plans showing changes to City Engineer for review.

6. Backfill (grout) and reconstruct tunnel built outside tolerance or which is outside City's right-of-way to be within tolerance when so directed by City Engineer.

3.08 TUNNEL CONNECTIONS, TERMINATIONS, AND TEMPORARY BULKHEADS

A. Connect new tunnels to existing structures by removing existing bulkheads, when necessary, and sealing junction as shown on Drawings.

B. Seal terminations of tunnels, which are not connected to permanent structures, by temporary bulkhead.

C. Design temporary bulkheads where and when required and obtain City Engineer's acceptance of design prior to constructing it. Provide bulkheads capable of resisting lateral earth and hydrostatic pressures, waterproof, and capable of being removed without damaging water line or plastic liner.

3.09 MONITORING

A. Monitoring Instrumentation: This specification establishes minimum instrumentation requirements for tunneling. Additional instrumentation requirements for critical areas may be specified elsewhere in Specifications or on Drawings. Contractor may install more extensive system at Contractor's sole expense. Instrumentation specified shall be accessible at all times to City Engineer.

1. Submit for review, prior to construction, Monitoring Plan including instrument installation design, instrumentation points location and layout, manufacturer's catalog literature, installation report formats.

2. Install and maintain system of instrumentation to monitor tunneling operation and to detect movement in soil and adjacent structures. Instruments shall consist of no less than sufficient number of inclinometers and crack monitors at bridge and adjacent structures and sufficient piezometers. Use monuments sufficiently removed from construction to avoid errors in readings due to ground settlement.

3. Installation of instrumentation by Contractor shall not preclude City Engineer, through independent contractor or consultant, from installing instrumentation in, on, near, or adjacent to construction work. Provide access to work for independent installations.

4. Install soil instruments such as piezometers, inclinometers, extensometers, and crack monitors by qualified subcontractor specializing in geotechnical work.

5. Install extensometers to depth of 5 feet above crown of water line tunnel as shown on Drawings to measure vertical movements in soils during and subsequent to tunneling. Extensometer consists typically of three-prong anchor, 1/4-inch standard stainless steel inner pipe, and 1-inch standard Schedule 80 PVC outer pipe. Pipes are assembled in sections and fastened together with standard couplings to required anchor depths. Locate top of extensometer within flush-mounted hand hole cover capable of withstanding HS-20 truck loading. Geotechnical instrumentation installation subcontractor shall provide procedures for installation of extensometers as part of Monitoring Plan.

B. Building and Structures Assessment: Submit for review prior to construction, Building and Structures Assessment Plan. Provide preconstruction and post-construction assessment reports for buildings and structures located within distance equal to depth of tunnel but at least 50 feet in plan from proposed tunnel centerline and shafts. Include photographs or video of existing damage to structures in vicinity of water line alignment in assessment reports.

C. Settlement Surveying: This specification establishes minimum settlement survey requirements for structures and ground surface monitoring points.

1. Submit settlement surveying and monitoring plan for review prior to construction. Plan shall identify location of settlement monitoring points, reference benchmarks, survey schedules and procedures and reporting formats.

2. Locate survey points on all structures within distance equal to depth of tunnel but at least 50 feet in plan from tunnel centerline.

3. Record horizontal coordinates and elevations (with accuracy of 0.01 feet) for each survey point location. Reference survey points so that they may be accurately re-establishedwhen lost or destroyed.

4. Unless otherwise specified, record ground surface elevations on center line ahead of TBM and at 20 feet either side of center line at minimum of 100-foot intervals or at least three locations per tunnel drive. Starting 100 feet ahead of TBM and continuing until TBM is 100 feet beyond measurement point or until further movement is not detected, unless otherwise directed by City Engineer. Record cross-sectional points at 10-foot spacing for distance of 50 feet each side of center line or to ROW, whichever is less.

5. Locate survey points at crossings under installations as follows:

   a. Roads: Centerline and each shoulder.

   b. Railroad: Track subbase at centerline of each track.

   c. Utilities and Pipelines: Directly above and 10 feet before and after intersection.

6. For shaft settlement see Section 02400 - Tunnel Shafts.

D. Measure and maintain records of deformation of primary liner.

E. Reading Schedule and Reporting: Submit readings from various instruments and survey points weekly to City Engineer. Take daily Readings as required by City Engineer when construction is approaching or near critical structures (structures, bridge piers, pipelines, etc., partially or entirely located within distance equal to depth of tunnel but at least 50 feet in plan from tunnel centerline). Take initial readings of surface points before excavation or construction is started.

1. Immediately report to City Engineer movement, cracking, or settlement which is detected and take immediate remedial action. Contractor shall be fully responsible for damage to adjacent structures.

2. At end of construction after water line is installed, and dewatering is discontinued, make final survey of control points established for instrumentation and observation. Submit final readings to City Engineer. Make visual inspection of structures adjacent to water line and report to City Engineer condition of structures, damage incurred during construction, and corrective action taken.

3.10 DISPOSAL OF EXCESS MATERIAL

A. Remove spoil from job site and dispose in accordance with Section 01504 - Temporary Facilities and Controls.

END OF SECTION

Section 02511S

WATER LINES

The following supplements modify Section 02511 - Water Lines Standard Specification. Where a portion of the Specification is modified or deleted by this Supplementary Specification, the unaltered portions of the Specification shall remain in effect.

1.02 MEASUREMENT AND PAYMENT: replace Paragraph 1.02 A. 1 with the following:

1. Payment for water lines installed by open cut, trenchless construction with or with casing, aerial crossing and pipe offset section or within limits of Potentially Petroleum Contaminated Area (PPCA) is on a linear foot basis for each size of pipe installed. Payment will include welded and restrained joints. Separate pay items are used for each type of installation:

    a. Mains: Mains Measure along axis of pipe and include fittings and valves.

    b. Branch Pipe: Measure from axis of water line to end of branch.

3.01 PREPARATION: Delete Paragraph I and replace with the following:

I. If asbestos-cement (A.C.) pipe is encountered, follow safety practices outlined in OSHA 29 CFR 1926.1101 – Asbestos. Refer to Section 02221 – Removing Existing Pavements, Structures, Wood, and Demolition Debris for removing and disposing of A.C. pipe.

END OF SUPPLEMENT

Approved by:

Mark L. Loethen, P.E., CFM, PTOE
City Engineer
Department of Public Works & Engineering

11/17/2012
Date

Section 02513S

WET CONNECTIONS

The following supplements modify Specification Section 02513 – Wet Connections. Where a portion of the Specification or Detail is modified or deleted by this Supplementary Specification, the unaltered portions of the Specification shall remain in effect.

1.03 REFERENCES: Add the following Paragraph B:

B. OSHA 29 CFR 1926.1101 – Asbestos.

Add the following new Paragraph:

3.03 CONNECTION TO ASBESTOS-CEMENT (AC) PIPE

A. Notify Project Manager when AC pipe is encountered.

B. Refer to Section 02221 – Removing Existing Pavements and Structures for crew training, safety precautions, and AC pipe removal requirements.

C. Protocol:

1. Mechanically excavate to no more than 6 in. of AC Pipe. Carefully uncover the remainder of pipe by hand or with shovel.
2. Keep pipe adequately wet before and during work.
3. Place 2 layers of 6 mil polyethylene sheeting under the asbestos pipe to prevent soil contamination.
4. Use hand tools to remove collars. Replace minimum 6 ft. section of pipe. Use of power tools is prohibited.
5. Do not crush AC pipe in place. Remove waste AC pipe.

END OF SUPPLEMENT

Approved by:

Mark L. Loethen, P.E., CFM, PTOE
City Engineer
Department of Public Works & Engineering

11/17/2012
Date

Section 02514 S

DISINFECTION OF WATER LINES

The following supplements modify Section 02514 – Disinfection of Water Lines Standard Specification. Where a portion of the Specification is modified or deleted by this Supplementary Specification, the unaltered portions of the Specification shall remain in effect.

3.06 COMPLETION: Delete Paragraph 3.06 A and replace with the following:

A. Upon satisfactory completion of disinfection and hydrostatic testing, remove risers and cap directly at the water line. Do not leave any portion of riser extending from water line. Backfill excavation promptly. Show blow-off locations on as-built record drawings, and note the type of cap used. If blow-off location is underneath pavement, comply with the following:

1. If pavement is restored prior to completion of disinfection and hydrostatic testing, install temporary pavement over blow-off. Comply with Street Cut Ordinance for dimensions of temporary pavement.

2. Backfill excavation with select fill or cement stabilized sand in accordance with Section 02320 – Utility Backfill Materials and Section 02317 – Excavation and Backfill for Utilities.

END OF SUPPLEMENT

Approved by:

Arthur Morris for

Hamlet Hovsepian, P.E.
Assistant Director
Water Engineering Section
Engineering and Construction Division

04/10/2013
Date

Section 02515 S

HYDROSTATIC TESTING OF PIPELINES

The following supplements modify Section 02515 – Hydrostatic Testing of Pipelines Standard Specification. Where a portion of the Specification is modified or deleted by this Supplementary Specification, the unaltered portions of the Specification shall remain in effect.

3.02 TEST PROCEDURES: Add the following Paragraph 3.02 F:

F. When testing a section of pipe between valves, applying hydrostatic pressure to the opposite side of an isolation valve is not allowed, unless otherwise approved by Project Manager.

3.03 ALLOWABLE LEAKAGE FOR WATERLINES: Delete Paragraph 3.03 B and replace with the following.

B. Maximum allowable leakage:

1. Water lines with non-welded joints: 3.19 gallons per inch nominal diameter per mile of pipe per 24 hours while testing. Welded and flanged joints shall not be included in measurement of pipe length for determining allowable leakage. For pipe sections that are welded or flanged on one side only, include half of the pipe section in the total length of pipe for allowable leakage.

2. Water lines with welded and flanged joints only: zero allowable leakage.

3. No leakage is allowed through any valve.

3.04 CORRECTION FOR FAILED TESTS: Add the following Paragraph 3.04 A, and renumber existing Paragraphs A through C:

A. Upon discovering a leak during the hydrostatic test, identify location of pipe leak. Determine magnitude and extent of impact to surrounding soil. Based on this information, Project Manager may require additional removal and replacement of surrounding pavement with no separate payment.

3.05 COMPLETION: Delete Paragraph 3.05 A and replace with the following:

A. Upon satisfactory completion of disinfection and hydrostatic testing, remove risers and cap directly at the water line. Do not leave any portion of riser extending from water line. Backfill excavation promptly. Show blow-off locations on as-built record drawings, and note the type of cap used. If blow-off location is underneath pavement, comply with the following:

1. If pavement is restored prior to completion of disinfection and hydrostatic testing, install temporary pavement over blow-off. Comply with Street Cut Ordinance for dimensions of temporary pavement.

2. Backfill excavation with select fill or cement stabilized sand in accordance with Section 02320 – Utility Backfill Materials and Section 02317 – Excavation and Backfill for Utilities.

END OF SUPPLEMENT

Approved by:

Arthur Morris for

Hamlet Hovsepian, P.E.
Assistant Director
Water Engineering Section
Engineering and Construction Division

04/10/2013
Date

Section 02518S

STEEL PIPE AND FITTINGS FOR LARGE DIAMETER WATER LINES

The following supplements modify Section 02518 - Steel Pipe and Fittings for Large Diameter Water Lines Standard Specification. Where a portion of the Specification is modified or deleted by this Supplementary Specification, the unaltered portions of the Specification shall remain in effect.

2.01 STEEL PIPE: Delete Paragraphs J.8.a and J.8.b and replace with the following:

a. Bells: Formed by either expansion of pipe end, or by segmental expander which stretches steel past its elastic limit, or by attaching sized weld-on bell rings. Weld-on bell rings shall comply with AWWA M11 and AWWA C200, attached with full-thickness fillet weld, welded inside or out. Minimum thickness of completed bell ring is equal to thickness of pipe wall in barrel of pipe between joint ends.

b. Spigots: Sized prior to rolling gasket groove. For Carnegie joints, attach with full-thickness fillet weld, welded inside or outside. Minimum thickness of joint ring shall be equal to or greater than thickness of pipe wall in barrel of pipe between joint ends.

Add the following Paragraph J.9:

9. Use of an expanded bell with a Carnegie-style spigot is not allowed.

2.04 EXTERNAL COATING SYSTEMS FOR BURIED STEEL PIPE: Add the following Paragraph to 2.04 A.3:

"Polyurethane coatings to extend completely to edge of pipe joint."

END OF SUPPLEMENT

Approved by:

Arthur Morris for

Hamlet Hovsepian, P.E.
Assistant Director
Water Engineering Section
Engineering and Construction Division

4/12/2013
Date

Section 02525S

TAPPING SLEEVES AND VALVES

The following supplements modify Specification Section 02525 – Tapping Sleeves and Valves. Where a portion of the Specification or Detail is modified or deleted by this Supplementary Specification, the unaltered portions of the Specification shall remain in effect.

1.03 REFERENCES: Add the following Paragraph I:

I. OSHA 29 CFR 1926.1101 – Asbestos.

Add the following new Paragraph:

3.03 ADDITIONAL REQUIREMENTS FOR TAPPING ASBESTOS-CEMENT (AC) PIPE

A. Notify Project Manager when AC pipe is encountered.

B. Refer to Section 02221 – Removing Existing Pavements and Structures for crew training, safety precautions, and AC pipe removal requirements.

C. Protocol:

1. Mechanically excavate to no more than 6 in. of AC Pipe. Carefully uncover the remainder of pipe by hand or with shovel.
2. Keep pipe adequately wet before and during work.
3. Locate tap a minimum of 2 ft. away from existing AC collar.
4. Use of power tools is prohibited.
5. Remove waste AC pipe coupon.

END OF SUPPLEMENT

Approved by:

Mark L. Loethen, P.E., CFM, PTOE
City Engineer
Department of Public Works & Engineering

11/17/2012
Date

Section 02713S

RECYCLED CRUSHED CONCRETE BASE COURSE

The following supplement modifies Section 02713 – Recycled Crushed Concrete Base Course Standard Specification. Where a portion of the Specification is modified or deleted by this Supplementary Specification, the unaltered portions of the Specification shall remain in effect.

1.02 MEASUREMENT AND PAYMENT. Delete paragraph 1.02 A.1 through A.2 and replace with the following:

1. Payment for RCCB is on a per square yard basis furnished and compacted in place.

2. Payment for RCCB for transitions and base repairs, if required, is on a per square yard basis.

END OF SUPPLEMENT

Approved by:

Hamlet Hovsepian, P.E.
Interim Senior Assistant Director
Engineering and Construction Division

Date 10/8/09

Section 02716 (Large Diameter)

CEMENT STABILIZED SAND BASE

PART 1 GENERAL

1.01 SECTION INCLUDES

A. Cement stabilized sand base material.

1.02 MEASUREMENT AND PAYMENT

A. Unit Prices.

1. Payment for work under this section will be on a square yard basis for the thickness shown on Drawings. Limits of measurement will match actual pavement replaced, but no greater than the maximum pavement replacement limits shown on Drawings. Limits for measurement will be extended to include installed cement stabilized sand base course material that extends 1 foot beyond outside edge of pavement to be replaced, except where proposed pavement section shares a common longitudinal or transverse edge with existing pavement section. No pavement will be made for cement stabilized sand base in areas beyond these limits.

2. A price reduction for deficient thickness or strength will be applied in accordance with paragraph 3.08.

B. Stipulated Price (Lump Sum). If the Contract is a Stipulated Price Contract, payment for work in this Section is included in the total Stipulated Price.

1.03 REFERENCES

A. ASTM D558 - Standard Test Methods for Moisture-Density Relations of Soil-Cement Mixtures.

1.04 SUBMITTALS

A. Submittals shall conform to requirements of Section 01330 - Submittal Procedures.

B. Submit material qualification and mix design tests to include:

1. Three series of tests of sand or fine aggregate material from proposed source. Test procedures are defined in Paragraph 2.01.

2. Three moisture-density relationship tests prepared using the material qualified by the tests of Paragraph 1.04 B.1. Test blends of fine aggregate from crushed concrete and bank run sand at ratio to be used for mix design testing.

3. Mix design report to meet design requirements of Paragraph 2.01. Include compressive strength tests after 48-hours and 7 days curing.

C. Submit source of cement-sand material.

PART 2 PRODUCTS

2.01 MATERIALS

A. Conform to requirements of Section 02321 - Cement Stabilized Sand.

2.02 MIXING MATERIALS

A. Conform to requirements of Section 02321 - Cement Stabilized Sand.

PART 3 EXECUTION

3.01 FIELD QUALITY CONTROL

A. Conform to requirements of Section 02321 -Cement Stabilized Sand for performance, testing and adjustment for deficient strength.

B. Material not placed, compacted and finished within 4 hours after mixing shall be rejected.

3.02 PREPARATION OF SUBGRADE

A. After excavation and/or fill is made to subgrade lines, remove soft or undesirable material and replace with material as specified under Section 02317 - Excavation and Backfill for Utilities. Grade and shape subgrade required to construct cement-stabilized sand base in conformance with lines, grades, thickness and typical cross section shown on Drawings.

B. Compact subgrade material as specified in Section 02317 - Excavation and Backfill for Utilities.

3.03 PLACING

A. Do not exceed percentage of moisture in soil subgrade at time of cement-stabilized sand base placement that permits uniform and intimate cement sand curing during placement operations. Do not exceed specified optimum moisture content for surrounding soil.

B. Place cement-stabilized base in uniform layers to produce depth indicated on Drawings. Place material in a single layer for depth of 6 inches or less. Place no single layer thicker than 6 inches or less than 3 inches for depth greater than 6 inches.

C. Provide material on dry side of optimum moisture content during compaction but sufficient for hydration.

D. Make vertical construction joints between new material and material placed for more than 4 hours. Form plane of joint by a header removed immediately prior to placing new base, or cut base placed first to a vertical edge immediately prior to placing new base.

E. Do not place base when air temperature is below 40°F and falling. Place when temperature is above 35°F and rising. Take temperature in shade and away from artificial heat.

3.04 COMPACTION

A. Roll loose mixture with tamping rollers in addition to plate compactors or tandem rollers. Compact with mechanical hand tampers in places inaccessible to roller

B. Compact to 95 percent ASTM D558, unless otherwise specified.

C. Reconstruct sections when moisture content of uncompacted material exceeds amount required for proper hydration of cement.

3.05 FINISHING

A. Finish surface to grade by blading and seal with pneumatic or flat wheel rollers after final course is compacted. Other means providing a dense, uniform surface and avoiding compaction planes are permitted.

B. Correct any deviation from plan surface in excess of 1/4 inch in cross section and in length of 16 feet measured longitudinally prior to paving. Correct irregularities or weak spots by removing full depth of affected areas. Replace with suitable material as required. Reshape and compact.

C. Maintain moisture content of surface material at ±2 percent of optimum moisture. Proceed with surface compaction and finishing to produce a smooth, closely knit surface, free of cracks, ridges or loose material. Conform to crown, grade and line shown on Drawings, or as required to ensure proper drainage of pavement.

3.06 CURING

A. Protect finished surface against rapid drying by maintaining a moist condition. Sprinkle for not less than 3 days or until surface or pavement is placed.

3.07 TRAFFIC AND MAINTENANCE

A. Completed section of cement-stabilized sand base may be opened to local traffic and construction equipment after curing period, provided base material has hardened sufficiently to prevent marring or distorting surface by equipment or traffic.

B. Maintain cement-stabilized base in good condition until pavement replacement has been completed and accepted. Immediately repair defects, as often as needed to keep area intact. Repair cement-stabilized base to full depth by replacement. Do not repair by adding a thin surface layer to damaged part.

3.08 ADJUSTMENT FOR DEFICIENT BASE THICKNESS AND STRENGTH

A. Construct base to thickness and typical section shown on Drawings. Where base does not conform:

1. City may core drill base prior to final acceptance. Cores will be drilled full thickness of section. At least three core thicknesses will be averaged to determine base thickness.

2. A base within ½ inch of required thickness will be considered as satisfactory.

3. A base thickness between ½ inch less and 1½ inches less than required thickness will be considered deficient. Adjusted unit price will be used in payment.

   a. Adjusted unit price will bear same ratio to unit price as square of actual average thickness of base bears to square of thickness shown.

   b. Length of area of such deficient thickness will be determined by additional cores taken at 10-foot intervals in both directions until cores are obtained which are at least that required thickness less ½ inch.

   c. Width of deficiency will be entire width of base as placed in one operation within length as determined above.

4. No payment will be made for base found more than 1½ inches deficient. Length of unsatisfactory area will be determined by additional cores at 10-foot intervals in both directions until cores are obtained which are required thickness less ½ inch. Width will be entire base as placed in one operation within length determined as above. Remove and replace such base with base of specified

thickness.

5. No additional payment over unit price will be made for thickness exceeding that required.

6. Contractor responsible for cost of cores taken to define limits of deficient base thickness.

B. Refer to Section 02321 - Cement Stabilized Sand, paragraph 3.03 for payment adjustment for deficient strength.

END OF SECTION

Section 02751 S

CONCRETE PAVING

The following supplements modify Section 02751 – Concrete Paving Standard Specification. Where a portion of the Specification is modified or deleted by this Supplementary Specification, the unaltered portions of the Specification shall remain in effect.

3.02 PREPARATION: Add the following paragraph 3.02 C

C. If the Contractor's work results in voids under adjacent lanes of pavement then, unless otherwise directed by the City, remove and replace the damaged pavement in accordance with Section 02951 and Street Cut Ordinance, at no additional cost to City.

END OF SUPPLEMENT

Approved by:

Arthur Morris for 04/10/2013

Hamlet Hovsepian, P.E.
Assistant Director
Water Engineering Section
Engineering and Construction Division

Date

Section 02752 S

CONCRETE PAVEMENT JOINTS

The following supplements modify Section 02752 – Concrete Pavement Joints Standard Specification. Where a portion of the Specification is modified or deleted by this Supplementary Specification, the unaltered portions of the Specification shall remain in effect.

3.01 PLACEMENT: Delete paragraph 3.01 A and B and replace with the following:

A. When new Work is adjacent to existing concrete pavement and existing joint is an expansion joint, then place joints at same location as existing joints in adjacent pavement. Dowels at existing expansion joints shall be saw cut to eliminate possible damage to adjacent pavement that is scheduled to remain. The cost for this saw cut is incidental to the pavement removal and disposal pay item(s).

B. When new Work is adjacent to existing concrete and existing joint is a construction joint (ex., deformed metal strip joints, tooled joints, partially saw cut joints with sealant, etc.), then unless otherwise directed by the City, provide full-depth saw cut 2-inch maximum away from pavement construction joints. Saw cut distance from joint shall be minimum necessary for a clean straight edge, and if the joint is at the crown the saw cut shall be as close to the crown as possible. Saw cut shall provide straight, smooth joint surface without chipping, spalling, or cracks.

C. If limit of removal of existing asphalt pavement does not fall on existing joint, saw cut existing asphalt pavement minimum of 2 inches deep to provide straight, smooth joint surface without chipping, spalling, or cracks.

END OF SUPPLEMENT

Approved by:

Arthur Morris for 04/10/2013

Hamlet Hovsepian, P.E. Date
Assistant Director
Water Engineering Section
Engineering and Construction Division

Section 02762S

BLAST CLEANING OF PAVEMENT

The following supplement modifies Specification Section 02762. Where a portion of the Specification is modified or deleted by this Supplementary Specification, the unaltered portions of the Specification shall remain in effect.

1.02 MEASUREMENT AND PAYMENT: Delete paragraphs 1.02 A.1 through A.4 and replace with the following:

1. No separate payment will be made for blast cleaning of pavement under this Section unless included as a bid item in Document 00410 - Schedule of Unit Price Work. Include payment in unit price for installation and maintenance of traffic control.

2. When included as a bid item in Document 00410 - Schedule of Unit Price Work, payment for blast cleaning of roadway lanes is on a linear foot basis for each width, measured in place.

3. When included as a bid item in Document 00410 - Schedule of Unit Price Work, payment for blast cleaning of symbols and legends is on a square foot basis, measured in place.

4. When included as a bid item in Document 00410 - Schedule of Unit Price Work, payment for removal of raised pavement markings, all types, is on a lump sum basis.

5. Refer to Section 01270 - Measurement and Payment for unit price procedures.

END OF SUPPLEMENT

Approved by:

Hamlet Hovsepian, P.E.
Chief Engineer
Engineering and Construction Division

10/27/04
Date

Section 02951S

PAVEMENT REPAIR AND RESTORATION

The following supplements modify Section 02951 – Pavement Repair and Restoration Standard Specification. Where a portion of the Specification is modified or deleted by this Supplementary Specification, the unaltered portions of the Specification shall remain in effect.

3.01 PREPARATION: Delete paragraph 3.01 D and replace with the following:

D. When new Work is adjacent to existing concrete and existing joint is a construction joint (ex., deformed metal strip joints, tooled joints, partially saw cut joints with sealant, etc.), then unless otherwise directed by the City, provide full-depth saw cut 2-inch maximum away from pavement construction joints. Saw cut distance from joint shall be minimum necessary for a clean straight edge, and if the joint is at the crown the saw cut shall be as close to the crown as possible. Saw cut shall provide straight, smooth joint surface without chipping, spalling, or cracks.

Add the following paragraphs 3.01 H, I, and J:

H. If existing pavement thickness is less than 7-inches, then dowels will be deleted and the non doweled expansion joint detail will be used instead, unless directed otherwise by the City.

I. When new Work is adjacent to existing concrete pavement and existing joint is an expansion joint, then place joints at same location as existing joints in adjacent pavement. Dowels at existing expansion joints shall be saw cut to eliminate possible damage to adjacent pavement that is scheduled to remain. The cost for this saw cut is incidental to the pavement removal and disposal pay item(s).

J. If the Contractor's work results in voids under adjacent lanes of pavement then, unless otherwise directed by the City, the Contractor shall remove and replace the damaged pavement in accordance with Section 02951 and the Street Cut Ordinance, at no additional cost to the City.

END OF SUPPLEMENT

Approved by:

Arthur Morris for 04|10|2013

Hamlet Hovsepian, P.E. Date
Assistant Director
Water Engineering Section
Engineering and Construction Division

APPENDIX A:

STORM WATER POLLUTION PREVENTION PROGRAM

STORM WATER POLLUTION PREVENTION PLAN

42-INCH WATER LINE ALONG SANDPIPER, LUDINGTON, PEMBRIDGE AND WEST BELLFORT FROM WEST AIRPORT TO BRAES FOREST DRIVE
CITY OF HOUSTON SWTP WBS NO. S-000900-0111-4, CONTRACT 74B

TPDES GENERAL PERMIT NO. TX150000
MAY 2012 (UPDATED OCTOBER 2012)

Prepared for

Lockwood, Andrews & Newnam, Inc.
A LEO A DALY COMPANY

Lockwood, Andrews & Newnam
2925 Briarpark Drive
Houston, Texas 77042

Prepared by

TTL Corp **(FIRM RN: F-7725)**
P.O. Box 1537
Cypress, TX 77410-1537
Tel: 281-304-9347
Fax: 281-213-9535



42-INCH WATER LINE ALONG SANDPIPER, LUDINGTON, PEMBRIDGE AND WEST BELLFORT FROM WEST AIRPORT TO BRAES FOREST DRIVE

Storm Water Pollution Prevention Plan Engineering Report

City of Houston Contract 74B
WBS No. S-000900-0111-4

Prepared for
Lockwood, Andrew & Newnam

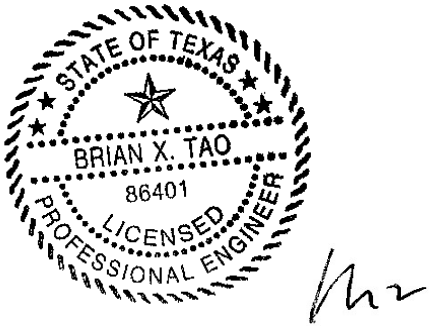

10/19/2012

Prepared by
TTL Corp
(FIRM RN: F-7725)

May 2012
(Updated October 2012)

Table of Contents

1. PROJECT DESCRIPTION

1.1. Description of Construction Activities 1

1.2. Sequence of Major Activities 2

1.3. Potential Pollutants 2

1.4. Estimated Total Site Area and Total Disturbed Area 2

1.5. Runoff Coefficient 2

1.6 Site Map 2

1.7 Site Drainage 2

1.8. Soils 3

1.9. Name of Receiving Waters and Extent of Wetlands 4

1.10. Endangered Species 4

1.11. Environmental Site Assessment Phase I 4

2. CONTROLS

2.1. Erosion and Sediment Controls

2.1.1. Stabilization Practices 5

2.1.2. Structural Practices 5

2.1.3. Sequence of Major Erosion and Sediment Control Activities 5

2.2. Storm Water Quality Management 6

2.3. Other Controls

2.3.1. Waste Material Disposal 6

2.3.2. Offsite Vehicle Tracking 6

2.3.3. Street Sweeping and Cleaning 6

2.3.4. Wind Erosion Control 7

2.3.5. Material Stock Piles 7

2.3.6. Demonstration of Compliance with State and Local Regulations 7

3. MAINTENANCE

3.1. Stabilization Practices 8

3.2. Structural Practices 8

4. INSPECTIONS

4.1. Personnel 9

4.2. Revisions to Plan 9

4.3. Inspection Reports 9

5. NON-STORM WATER DISCHARGES

5.1. Inventory for Pollution Prevention Plan 11

5.2. Spill Prevention

5.2.1. Good Housekeeping 11
5.2.2. Hazardous Products 12
5.2.3. Product Specific Practices 12
5.2.4. Spill Prevention Practices 13

6. STANDARD SPECIFICATIONS 14

7. INSPECTION FORMS 15

8. CERTIFICATIONS 16

APPENDICES

1. Location Map and Drainage Map
2. Inspection Forms
3. Certifications
4. SWPPP Design Set (6 sheets)

1. PROJECT DESCRIPTION

Prior to the start of construction activities, a Notice of Intent for coverage under the Texas Pollution Discharge Elimination System (TPDES) General Permit No. 150000 for Storm Water Discharge Associated with Construction Activities will be filed by the contractor. As a requirement of the General Permit, this Storm Water Pollution Prevention Plan (SWPPP) is prepared and shall be implemented throughout the construction.

All contractors and subcontractors shall be notified of the requirement for the SWPPP measures. A list of contractors and subcontractors will be maintained (Appendix 3 Certifications) and included in the SWPPP. If subcontractor(s) change during the project, the list shall be updated accordingly. Duties of the City of Houston and Contractor/Subcontractor(s) include but are not limited to:

1. Ensuring full compliance with the SWPPP
2. Implementing all elements of the SWPPP, including but not limited to:
    - Prompt and effective erosion and sediment control measures
    - Non-storm water management, and materials and waste management activities such as: monitoring discharges (dewatering, diversion devices); general site clean-up; vehicle and equipment cleaning, fueling and maintenance; spill control; ensuring that no materials other than storm water are discharged.
3. Pre-storm inspections
4. Storm event inspections
5. Post-storm inspections
6. Routine inspections as specified
7. Immediate repairs to the control measures as needed
8. Updates/amendments to the SWPPP, as needed

1.1 Description of Construction Activities

This project consists of approximately 9,250-LF42-inchwater line along Sandpiper Drive, Ludington Drive, Pembridge Drive and West Bellfort Street from West Airport Boulevard to Braes Forest Drive Details of project scope include:

1. The proposed 42-in water line will be tunneled when crossing Fondren Road and HCFCD Unit D140-00-00 (Fondren Diversion Channel). The remaining 42-in water lines will be open cut with depth up to 14-ft.

2. Associated constructions including but not limited to the following:

    a. Water line access manholes, butterfly valves, gate valves, drain lines and air vents.
    b. Existing sanitary sewer, waterline and storm sewer reconstructions, including:
        i. Approximately 2,525-LF 12-in water main replacement along Ludington Drive from Pembridge Drive to Fondren Road.
        ii. Storm sewer relocation along Ludington Drive both west and east of HCFCD Unit D140-00-00.
    c. Roadway pavement, driveway and sidewalk reconstructions. All disturbed areas are curb/gutter boulevard sections with storm sewers.

1.2 Sequences of Major Activities

The construction shall be accomplished as follows:

1. Inspect to verify existing grades and flows, and establish SWPPP measures as shown. The critical locations of SWPPP controls include curb inlets receiving surface flow and sheet flow along Ludington Drive at HCFCD Unit D140-00-00.
2. Excavate the project area including paved and non-paved areas, and proper disposals.
3. Open cut trenches for laying the water lines, and sanitary lines and storm sewer reconstructions.
4. Cover the trenches, reconstruct paved areas, and stabilize disturbed unpaved areas.
5. Upon inspection and acceptance, remove the SWPPP measures.

1.3 Potential Pollutants

The primary pollutant sources are disturbed soils and subsequent surface water runoff within the project boundary. Other potential pollutant sources include debris from the clearing operations and petroleum products needed for the construction equipments.

1.4 Estimated Total Site Area and Total Disturbed Area

The total site area to be open cut and disturbed, all within the limits of public rights-of-way or easements is approximately 7.09 acres, including approximately 3.49-acre pavement area, and 3.59-acre unpaved area. The total disturbed area is same as the site construction area.

1.5 Runoff Coefficient

The existing rainfall runoff coefficient "C" prior to construction is approximately 0.62 for the site area (i.e. disturbed area). The rainfall runoff coefficient "C" following the proposed water line construction remain same at 0.62. The calculation assumes "C"=0.35 for unpaved area and "C"=0.90 for the pavement areas.

1.6 Site Map

The location and drainage system maps are attached in Appendix I. The site is identified as 29°39' 5.36" N latitude, 95°30' 35.63" W longitude.

1.7 Site Drainage

According to FEMA FIRM Panel 48201C0845L, the construction area is inside unshaded Zone X, outside 100-year floodplain, except crossing HCFCD Unit D140-00-00. Exhibit 1 shows the location map. Exhibit 2 shows:

1. The drainage area for the project construction is flat.

2. West half of West Bellfort Street construction drains west and outfalls into HCFCD Unit D140-01-01 through a 66-in storm sewer at west of Braes Forest Drive.

3. East half of West Bellfort Street construction drains east through underground storm sewers, which outfall is along Braesridge Drive at HCFCD Unit D140-01-00.

4. The construction area along Pembridge Drive at Quail Meadow Drive drains north to the intersection with West Bellfort Street, then east as Item 3 above.

5. The construction area along Pembridge Drive at Hopewell Drive drains south to the intersection with Pembridge Drive, then east which outfall is along Fairmeadow Drive at HCFCD Unit D140-03-00.

6. The construction area along Ludington Drive from Pembridge Drive drains east then south along Fairmeadow Drive as Item 5 above.

7. The construction area along Ludington Drive at Woodknoll Lane and Stallion Lane drain to Dandelion Lane then south to HCFCD Unit D140-03-00.

8. The construction area along Ludington Drive at Braesridge Drive and west of Fondren Road drain to Pepperdine Lane then south to HCFCD Unit D140-03-00.

9. The construction area along Ludington Drive at east of Fondren Road drains to HCFCD Unit D140-00-00, including areas west of Sandpiper Drive.

10. The construction area along Sandpiper Drive at Cambridge Glen Drive drains to Ludington Drive to the north (Item 9 above).

11. The construction area along Sandpiper Drive at Dellfern Drive and Dawnridge Drive drain to Dellfern Drive then to HCFCD Unit D140-00-00 to the west.

12. The construction area along Sandpiper Drive at Chatham Island Lane and Old Chatham Lane drain to Chatham Island Lane then to HCFCD Unit D140-00-00 to the west.

13. The construction area along Sandpiper Drive at Dryad Drive drains west to HCFCD Unit D140-00-00.

14. The construction area along Sandpiper Drive at West Airport Boulevard drains west to HCFCD Unit D140-00-00.

1.8 Soils

Geotest Engineering Inc. performed the geotechnical investigation as documented in Report 1140183701 dated November 2 2011 with following findings:

1. The existing pavement consists of 6 to 9.25 inches of concrete with some stabilized subgrade below concrete and compacted fill materials.

2. The subsurface conditions for the proposed 42-inch water line alignment:

    - Sandpiper Drive. The subsurface soil below the pavement consists of medium stiff to hard brown, gray, yellowish brown and reddish brown Fat Clay, Fat Clay w/sand, and Sandy Lean Clay to a depth of25 feet.

    - Ludington Drive. The subsurface soil below the pavement or existing grade consists of stiff to hard brown, gray, dark gray, yellowish brown and reddish brown Fat Clay, Fat Clay w/sand, Lean Clay, Lean Clay w/sand and Sandy Lean Clay to depths of26 feet

    - Pembridge Drive. The subsurface soil beneath pavement consists of stiff to very stiff gray, yellowish brown and reddish brown Fat Clay to a depth of 25 feet.

    - W. Bellfort Street. The subsurface soil beneath the pavement or existing grade consists of stiff to hard dark gray, brown and gray, yellowish brown and gray and reddish brown and gray Fat Clay, Lean Clay and Sandy Lean Clay to a depth of 25 feet, the termination depth of borings. Fill material consisting of hard dark gray Fat Clay with grass roots was encountered to a depth of2 feet below the existing grade in one borehole.

3. The groundwater was encountered at depths ranging from 20.1 feet to 38 feet in borings during drilling along Ludington Drive west of Cambridge Drive. The groundwater as observed on October 4, 2011 in Piezometers at intersection of West Bellfort Street with Pembridge Drive and Fondren Road; along Ludington Drive at Fondren Road and west of Cambridge Drive; and along Sandpiper Drive at West Airport Boulevard range from 9.1 to 20.0 feet.

1.9 Name of Receiving Waters and Extent of Wetlands

Section 1.7 shows the project area drains to HCFCD Units D140-01-01, D140-01-00, D140-03-00 and D140-00-00 (Fondren Diversion Channel). The construction area is limited to already developed areas, so there is no known wetland.

1.10 Endangered Species

The construction area is limited to already developed areas, so there are no known threatened or endangered species will be impacted by the construction.

1.11 Environmental Site Assessment (ESA) Phase I

Geotest Engineering Inc. performed Phase I Environmental Site Assessment (ESA I) as documented in Report Number 1130015801 dated March 16 2012. The ESA I concluded no evidence of recognized environmental conditions (REC).

2 CONTROLS

The project areas drain to inlets then underground storm sewers for almost all of the construction except at HCFCD Unit D140-00-00 along Ludington Drive. Therefore, it is critical to prevent any sediment from entering the roadway storm sewer systems.

2.1 Erosion and Sediment Controls

Erosion control protects or stabilizes the soil surfaces, so as to prevent soil particles from detaching and becoming transported in storm water runoff. Sediment controls are structural measures that are designed to intercept and settle soil particles that have been detached and transported by storm water runoff. Erosion and sediment controls are shown on the Storm Water Pollution Prevention Plan (Appendix 4).

2.1.1 Stabilization Practices

1. Preserve existing vegetations and trees where required and when feasible; and limit construction disturbance area to the minimum.

2. Construction road access, staging and parking areas will be stabilized using coarse aggregate.

3. Texture soil surfaces on new exposed areas to reduce sheet flow and improve water impoundment.

4. Stabilize non-active area immediately upon completion of the project segment. Seeding date and application rates are as defined in Specification Section 02921.

5. Upon completion of construction, apply permanent erosion control to all remaining disturbed soil areas.

2.1.2 Structural Practices

1. Reinforced fabric fences will be installed along downslope side of the construction area at HCFCD Unit D140-00-00 to be disturbed. Reinforced filter fabric fence will also be installed around temporary stockpiles.

2. Inlet protection barriers or gravel bags will be placed around all inlets that catch flow from the disturbed area. Gravel bags will also be placed at curbs where the flow will leave the construction area through street pavement. They will be removed only after site restoration and final stabilization of the overall construction site.

2.1.3 Sequence of Major Erosion and Sediment Control Activities

1. Stabilized construction accesses, silt fencing, washing area with sediment trap, staging/parking area, temporary stock piles, inlet barriers along anticipated flow paths from the construction area, and gravel bags at street curbs before runoff leaving the construction areas, will be installed prior to any excavation.

2. The contractor shall maintain all erosion and sediment control measures during the construction. All disturbed areas to be exposed will be hydromulch seeded immediately upon construction completion. All excavated unsuitable material shall be hauled off site to an adequate disposal site. When all construction activity is complete and the site is stabilized and inspected, structural controls then can be removed. Any soil disturbed by the removal of the control measures shall be re-seeded.

2.2 Storm Water Quality Management

Existing roadside vegetations will be maintained as much as possible during the construction to provide flow attenuation, vegetative filtration and minimizing erosion.

2.3 Other Controls

2.3.1 Waste Material Disposal

All waste materials will be collected and stored in securely lidded metal dumpsters rented from a licensed solid waste management company. The dumpster will meet all local and state solid waste management regulations. All trash and construction debris from the site will be deposited in the dumpster. The trash and debris will be hauled to an approved landfill. No construction waste material will be buried onsite. All personnel will be instructed regarding the correct procedure for waste disposal. Notices to stating these practices will be posted in the office trailer and the individual, who manages the day-to-day operations, will be responsible for ensuring that these procedures are followed.

No hazardous waste is expected to be generated or encountered in this project. In the event that hazardous waste is encountered, all hazardous waste materials will be disposed of in the manner specified by local or state regulations or by the manufacturer. The individual, who manages the day-to-day operations, will be responsible for seeing that these procedures are followed.

A licensed sanitary waste management contractor will regularly collect all sanitary waste from the portable units if used on-site.

2.3.2 Offsite Vehicle Tracking

Stabilized construction entrances and exits help to reduce vehicle tracking of sediments. The paved streets adjacent to site entrance or exit shall be cleaned daily to remove any excess mud, dirt or rock tracked from the site.

2.3.3 Street Sweeping and Cleaning

Regular scraping and sweeping of streets, driveways and sidewalks must be conducted, so as to reduce sediment tracking from the construction site onto private or public roads.

2.3.4 Wind Erosion Control

Wind erosion or dust control consists of applying water as necessary to prevent or alleviate dust nuisance generated by construction activities. Watering prevents dust only for a short period and should be applied more often as necessary to be effective.

2.3.5 Material Stock Piles

Earth materials and landscape materials such as sod, rock and mulch shall not be stockpiled, placed or stored on driveways, streets, sidewalks or in runoff flow paths. Cover the stock piles when applicable.

2.3.6 Demonstration of Compliance with State and Local Regulations

The proposed project will be in compliance with applicable state and local waste disposal and sanitary regulations.

3 MAINTENANCE

The Following is a list of erosion and sediment controls to be used in this project.

3.1 Stabilization Practices

1. Stabilization of construction accesses, staging and parking areas.

2. Texture soil surface on exposed areas to reduce direct sheet flow and improve water impoundment.

3. Hydromulch seeding to be provided immediately upon completion of the disturbed areas.

3.2 Structural Practices

1. Silt fences to be installed at locations shown on the drawings until that area has achieved proper stabilization.

2. Inlet protection barriers to be installed at all inlets (existing or proposed after construction).

3. Gravel bags to be placed along street curbs before runoff leaves the construction areas.

To maintain the above practices, the following will be performed:

1. All control measures shall be maintained in good working order.

2. Maintenance and repairs will be conducted within 24 hours of inspection report.

3. Sediment will be removed from behind the silt fences when reaching about 1/4 the height of the fence, or 6 inches, whichever is less.

4. Silt fence fabric is securely attached to the fence posts, and the fence posts are firmly in the ground.

5. Any sediment around the storm inlets or gravel bags is to be removed immediately.

4. INSPECTIONS

Qualified personnel shall inspect disturbed areas of the construction site which have not been fully stabilized, structural control measures, and locations where vehicles enter or exit the site.
Such inspections shall be conducted prior to, during and after a storm event that causes runoff from the construction site; and at least once every seven (7) calendar days. The results of all inspections and assessments shall be documented in the SWPPP report.

4.1 Personnel

Each contractor will designate a qualified person or persons to perform the following inspections:

1. Disturbed areas and areas used for storage of materials that are exposed to precipitation will be inspected for evidence of, or the potential for pollutants entering the drainage system.

2. Erosion and sediment control measures identified in the plan will be observed to ensure that they are operating correctly.

3. Where discharge locations or points are accessible, they will be inspected to ascertain whether erosion control measures are effective in preventing significant impacts to receiving streams.

4. Locations where vehicles enter or exit the site will be inspected for evidence of offsite sediment tracking.

5. Hydromulch seeding and planting will be inspected for bare spots, washouts, or healthy growth.

The inspection will be conducted by the responsible person at least once every 7-calendar day and within 24 hours after a storm of 0.5 inch or greater. Contractor shall provide, at his expense, a rain tube or other suitable device to measure rainfall. Contractor shall also provide an emergency contact that is available during non-business hours.

4.2 Revisions to Plan

Based on results of the inspections, whenever there is a change in construction or operations which may affect the discharge of pollutants to surface waters or storm sewer systems, the site control and maintenance measures (Sections 2 & 3) and the Storm Water Pollution Prevention Plan (SWPPP) shall be revised as appropriate, no later than 7 calendar days following the inspections.

4.3 Inspection Reports

A report summarizing the scope of the inspection, name(s) and qualifications of the personnel making the inspection, the date(s) of the inspection, major observations relating to implementation of Storm Water Pollution Prevention Plan, and actions taken shall be made and retained as part of the Storm

Water Pollution Prevention Plan for the last three (3) years from the date that the site is finally stabilized. The report shall be signed in accordance with Part VI.G of the General Permit.

Copies of the forms to be used for the inspection and maintenance report are included in Appendix 2 as part of this SWPPP. Inspection and maintenance reports include:

1. Stabilization Measures
2. Reinforced Filter Fabric Barrier
3. Inlet Protection Barriers
4. Inlet Protection Barriers – Gravel Bags
5. Stabilized Construction Access/Staging Area
6. Protection of Trees in Construction Areas
7. Changes Required to the Storm Water Pollution Prevention Plan

5 NON-STORM WATER DISCHARGES

5.1 Inventory for Pollution Prevention Plan

The substances listed below are expected to be present onsite during construction:

- Aggregate
- Concrete
- Asphalt
- Detergents
- Paints
- Fertilizer
- Petroleum Products including Fuels
- Cleaning Solvents
- Lubricants
- Wood
- Steel Products

Authorized non-storm water discharges anticipated during the project:

1. Water from waterline flushing
2. Water for vehicle or equipment washing or dust control
3. Irrigation drainage from watering vegetation
4. Pavement wash water (not from toxic or hazardous material spill areas)
5. Uncontaminated groundwater from excavations

These effluents are to be controlled as required to minimize creation of sediment discharge.

5.2 Spill prevention

The following are the material management practices that will be used to reduce the risk of spills or other accidental exposure of materials and substances to storm water runoff. Contractor is responsible for cleaning up any spill.

5.2.1 Good Housekeeping

The following good housekeeping practices will be followed onsite during the construction project:

1. An effort will be made to store only enough products required to do the job.

2. All materials stored onsite will be stored in a neat, orderly manner in their appropriate containers and, if possible, under a roof or other enclosure.

3. Products will be kept in their original containers with the original manufacturer's label.

4. Substances will not be mixed with one another unless recommended by the manufacturer.

5. Whenever possible, all of a product will be used up before disposing of the container.

6. Manufacturer's recommendations for proper use and disposal will be followed.

7. Designated areas for equipment maintenance and repair (control of oil, grease, and fuel spills).

8. Waste receptacles with regular collection for liter and construction debris.

9. Equipment wash-down areas onsite with appropriate control of wash waters (including concrete truck wash down).

10. Proper storage areas for chemicals, paints, solvents, fertilizers, and other potentially toxic materials.

11. Adequately maintained sanitary facilities.

12. Properly control of raw materials stored onsite (for example, sand, aggregate and cement used in the manufacturing of concrete or stockpile of topsoils).

13. Street sweeping or cleaning.

The site superintendent will inspect daily to ensure proper use and disposal of materials onsite.

5.2.2 Hazardous Products

These practices will be followed to reduce the risks associated with hazardous materials, if hazardous materials are used.

1. Products will be kept in original containers unless they are not resealable.

2. Original labels and materials safety data will be retained.

3. If surplus product must be disposed of, manufacturers or local and state recommended methods of proper disposal will be followed.

5.2.3 Product Specific Practices

The following practices will be followed:

1. Petroleum Products: All on-site vehicles will be monitored for leaks and receive regular preventative maintenance to reduce the chance of leakage. Petroleum products will be stored in tightly sealed containers that are clearly labeled. Any asphalt substances used onsite will be applied according to manufacturer's recommendations.

2. Fertilizers: Fertilizers used will be applied only in minimum amounts recommended by the manufacturer. Once applied, fertilizer will be worked in the soil to limit exposure to storm

water. Storage will be in a covered shed. The contents of any partially used bags of fertilizer will be transferred to sealable plastic bag to avoid spills.

3. Paints: All containers will be tightly sealed and stored when not required for use. Excess paint will not be discharged to the storm sewer system but will be properly disposed of according to manufacturer's recommendations.

4. Concrete trucks: Concrete trucks will not be allowed to wash out or discharge surplus concrete or drum wash water at this project site.

5.2.4 Spill Prevention Practices

In addition to the good housekeeping and material management practices discussed in the previous sections of this plan, the following practices will be followed for spill prevention and cleanup:

1. Manufacturer's recommended methods for spill cleanup and will be clearly posted and sited personnel will be made aware of the procedures and the location of the information and cleanup supplies.

2. Materials and equipment necessary for spill cleanup will be kept in the material storage area on-site. Equipment and materials will include but not limited to brooms, dustpans, mops, rags, gloves, goggles, kitty litter, sand, sawdust, and plastic and metal trash container specifically for this purpose.

3. All spills must be cleaned up immediately after discovery.

4. The spill area will be kept well ventilated and personnel will wear appropriate protective clothing to prevent injury from contact with a hazardous substance.

5. Spills of toxic or hazardous materials will be reported to the appropriate state or local government agency, regardless of the size.

6. The spill prevention plan will be adjusted to include measures to prevent this type of spill from recurring and how to clean up the spill if there is another one. A description of the spill, what caused it, and cleanup measures will also be included.

7. The site superintendent responsible for the day-to-day operations will be the spill prevention and cleanup coordinator. He will designate at least three other site personnel who will receive spill prevention and cleanup training. These individuals will each become responsible for a particular phase of prevention and cleanup. The names of responsible spill personnel will be posted in the material storage area and in the office trailer onsite.

6 STANDARD SPECIFICATIONS

The SWPPP ensures the project complies with the requirements for General Permits for storm water discharges associated with construction activity under the National Pollution Discharge Elimination System (NPDES), or Texas Pollutant Discharge Elimination System (TPDES) after July 8, 2003. The latest Storm Water Discharges from Construction Activities - TXR150000 is dated February 15, 2008. The technical specifications cover the installation of erosion and sedimentation controls during construction is listed below.

Item	Title	Release Date
01410	TPDES Requirements	February 1, 2011
01570	Storm Water Pollution Prevention Control	February 1, 2011
01575	Stabilized Construction Access	February 1, 2011
01576	Waste Material Disposal	August 1, 2003
02921	Hydro Mulch Seeding	January 1, 2011

7 INSPECTION FORMS

See Appendix 2.

8 CERTIFICATIONS

See Appendix 3 for the following certifications:

1. Contractor/Subcontractor Certification
2. TPDES Operator Information
3. City of Houston Site Inspection Form
4. EPA Site Inspection Form
5. Notice to Be Posted

Appendix 1

Location Map and Drainage Map

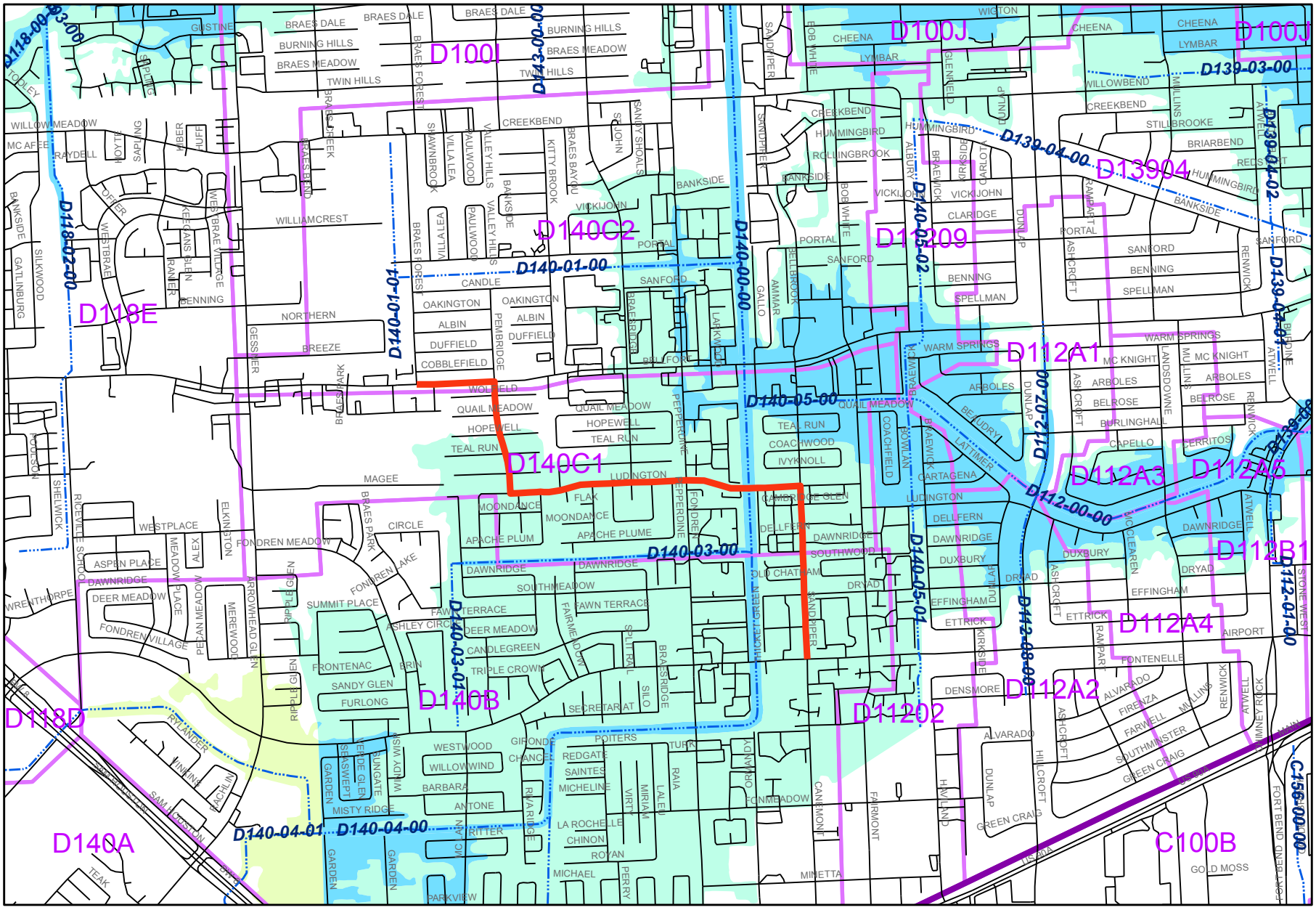

CONTRACT 74B

EXHIBIT 1. LOCATION MAP



Legend

- PROJECT LOCATION (74B)
- brays_contours
- TSARP CHANNELS
- GIMS STORM LINES
- Road

5052.sid

RGB

- Red: Band_1
- Green: Band_2
- Blue: Band_3

N W E S

0 500 1,000 Feet

CONTRACT 74B

EXHIBIT 2. DRAINAGE MAP

Appendix 2

Inspection Forms

42-INCH WATER LINE ALONG SANDPIPER, LUDINGTON, PEMBRIDGE AND WEST BELLFORT FROM WEST AIRPORT TO BRAES FOREST DRIVE
SWTP CONTRACT 74B, WBS No. S-000900-0111-4

INSPECTION AND MAINTENANCE REPORT

INSPECTOR: _____ DATE: _____

DAYS SINCE LAST RAINFALL: _____ AMOUNT OF LAST RAINFALL: _____ INCHES

STABILIZATION MEASURES

FROM	DATE SINCE LAST DISTURBED	DATE OF NEXT DISTURBANCE	STABILIZED?	STABILIZED WITH	CONDITION
_____	_____	_____	_____	_____	_____
_____	_____	_____	_____	_____	_____
_____	_____	_____	_____	_____	_____
_____	_____	_____	_____	_____	_____
_____	_____	_____	_____	_____	_____
_____	_____	_____	_____	_____	_____
_____	_____	_____	_____	_____	_____

STABILIZATION REQUIRED:
_____
_____
_____
_____

TO BE PERFORMED BY: _____ ON OR BEFORE: _____

42-INCH WATER LINE ALONG SANDPIPER, LUDINGTON, PEMBRIDGE AND WEST BELLFORT FROM WEST AIRPORT TO BRAES FOREST DRIVE
SWTP CONTRACT 74B, WBS No. S-000900-0111-4

INSPECTION AND MAINTENANCE REPORT

STRUCTURAL CONTROLS

REINFORCED FILTER FABRIC FENCE

LOCATION	BOTTOM OF FABRIC STILL BURIED	FABRIC TORN OR SAGGING?	POSTS TIPPING OVER?	HOW DEEP IS THE SEDIMENT?
_____	_____	_____	_____	_____
_____	_____	_____	_____	_____
_____	_____	_____	_____	_____
_____	_____	_____	_____	_____
_____	_____	_____	_____	_____
_____	_____	_____	_____	_____

MAINTENANCE REQUIRED FOR SILT FENCE:

_____
_____
_____
_____

TO BE PERFORMED BY: _____ ON OR BEFORE: _____

42-INCH WATER LINE ALONG SANDPIPER, LUDINGTON, PEMBRIDGE AND WEST BELLFORT FROM WEST AIRPORT TO BRAES FOREST DRIVE
SWTP CONTRACT 74B, WBS No. S-000900-0111-4

INSPECTION AND MAINTENANCE REPORT

STRUCTURAL CONTROLS

INLET PROTECTION BARRIERS

LOCATION	IN PLACE?/ CONDITION?	DEPTH OF SEDIMENT	CONDITION OF INLET
_____	_____	_____	_____
_____	_____	_____	_____
_____	_____	_____	_____
_____	_____	_____	_____
_____	_____	_____	_____
_____	_____	_____	_____
_____	_____	_____	_____

MAINTENANCE REQUIRED FOR INLET PROTECTION BARRIER:

_____
_____
_____
_____

TO BE PERFORMED BY: _____ ON OR BEFORE: _____

42-INCH WATER LINE ALONG SANDPIPER, LUDINGTON, PEMBRIDGE AND WEST BELLFORT FROM WEST AIRPORT TO BRAES FOREST DRIVE
SWTP CONTRACT 74B, WBS No. S-000900-0111-4

INSPECTION AND MAINTENANCE REPORT

STRUCTURAL CONTROLS

INLET PROTECTION BARRIERS – GRAVEL BAGS

LOCATION	IN PLACE?/ CONDITION?	DEPTH OF SEDIMENT	CONDITION OF CURB FOR TRAP SEDIMENT
_____	_____	_____	_____
_____	_____	_____	_____
_____	_____	_____	_____
_____	_____	_____	_____
_____	_____	_____	_____
_____	_____	_____	_____
_____	_____	_____	_____

MAINTENANCE REQUIRED FOR INLET PROTECTION BARRIER:

_____
_____
_____
_____

TO BE PERFORMED BY: _____ ON OR BEFORE: _____

42-INCH WATER LINE ALONG SANDPIPER, LUDINGTON, PEMBRIDGE AND WEST BELLFORT FROM WEST AIRPORT TO BRAES FOREST DRIVE
SWTP CONTRACT 74B, WBS No. S-000900-0111-4

INSPECTION AND MAINTENANCE REPORT

OTHER CONTROLS

STABILIZED CONSTRUCTION ENTRANCE/ STAGING AREA

DOES MUCH SEDIMENT GET TRACKED ONTO ROAD?	ENTRY SURFACE CLEAN OR SEDIMENT FILLED?	DOES ALL TRAFFIC USE ENTRANCE?
_____	_____	_____
_____	_____	_____
_____	_____	_____
_____	_____	_____
_____	_____	_____

MAINTENANCE REQUIRED FOR STABILIZED CONSTRUCTION ENTRANCE/ STAGING AREA:

_____
_____
_____
_____

TO BE PERFORMED BY: _____ ON OR BEFORE: _____

42-INCH WATER LINE ALONG SANDPIPER, LUDINGTON, PEMBRIDGE AND WEST BELLFORT FROM WEST AIRPORT TO BRAES FOREST DRIVE
SWTP CONTRACT 74B, WBS No. S-000900-0111-4

INSPECTION AND MAINTENANCE REPORT

OTHER CONTROLS

PROTECTION OF TREES IN CONSTRUCTION AREAS

LOCATION	CONDITION	IN PLACE?
_____	_____	_____
_____	_____	_____
_____	_____	_____
_____	_____	_____

MAINTENANCE REQUIRED FOR TREE PROTECTION:

_____
_____
_____
_____

TO BE PERFORMED BY: _____ ON OR BEFORE: _____

42-INCH WATER LINE ALONG SANDPIPER, LUDINGTON, PEMBRIDGE AND WEST BELLFORT FROM WEST AIRPORT TO BRAES FOREST DRIVE
SWTP CONTRACT 74B, WBS No. S-000900-0111-4

INSPECTION AND MAINTENANCE REPORT

CHANGES REQUIRED TO THE STORM WATER POLLUTION PREVENTION PLAN

_____
_____
_____
_____
_____

REASONS FOR CHANGES:

_____
_____
_____
_____
_____

PREPARED BY: _____

INSPECTOR'S SIGNATURE: _____ DATE: _____

Appendix 3

Certifications

ATTACHMENT 4

CONTRACTOR'S / SUBCONTRACTOR'S

CERTIFICATION FOR TPDES PERMITTING

I certify under penalty of law that I understand the terms and conditions of TPDES General Permit No. TXR150000 and the Storm Water Pollution Prevention Plan for the construction site identified as part of this certification.

Signature: _____

Name: (printed or typed) _____

Title: _____

Company: _____

Address: _____

Date: _____

Signature: _____

Name: (printed or typed) _____

Title: _____

Company: _____

Address: _____

Date: _____

Signature: _____

Name: (printed or typed) _____

Title: _____

Company: _____

Address: _____

Date: _____

ATTACHMENT 3

TPDES OPERATOR'S INFORMATION

Owner's Name and Address: City of Houston

Mr. _____
(City Official)

_____
(Department)
P. O. Box 1562
Houston, Texas 77251-1562
(713) 247-1000

Contractors' Names and Addresses:

General Contractor: _____
_____
_____
_____
Telephone: _____

Site Superintendent: _____
_____
_____
_____
Telephone: _____

Erosion Control and
Maintenance Inspection: _____
_____
_____
_____
Telephone: _____

Subcontractors' Names and Addresses:

_____ _____
_____ _____
_____ _____
_____ _____
Phone: _____ Phone: _____

Note: Insert name, address, and telephone number of person or firms

ATTACHMENT 6

City of Houston

Storm Water Pollution Prevention Plan
Construction Site Inspection Report

TPDES/EPA Permit Number _____

COH Storm Water Quality Permit Number _____

DATE _____

No exceptions noted.

The following must be corrected prior to continuing work:

Public Notice improperly posted

Initial Construction Site Inspection Report information requires updating

Copy of NOI not on site

Storm water pollution prevention plan not on site

Erosion and sediment controls improperly installed

Erosion and sediment control devices improperly maintained

Fueling or washout areas not properly protected

Portocan or other sanitary facilities not properly protected

Self-inspection and maintenance records incomplete

Sediment from site outside area of construction

Other (see description below)

_____

_____

Please contact the Storm Water Quality Engineer at
611 Walker, RA-257, Houston TX 77002
713-837-7383 fax 713-837-0570

Once the above items have been corrected, call to arrange for reinspection. No further inspections for any construction related activity shall be made until the above items have been corrected.

_____	_____
Inspector's Signature	Contractor's Signature
_____	_____
Inspector's Name	Contractor's Name

not present

Distribution Stormwater Quality Engineer, Code Enforcement, Inspector, Operator
(Operator is Contractor) Form _____ (10-01-01)

EPA NPDES Construction Inspection Form

The following inspection is being performed in compliance with Part IV.D.4. of the NPDES Region 6 Storm Water Construction General Permit [63 Fed. Reg. 36502] and being retained in accordance with Part V of the Permit. Qualified personnel (provided by the permittee or cooperatively by multiple permittees) shall inspect disturbed areas of the construction site that have not been finally stabilized, areas used for storage of materials that are exposed to precipitation, placement and effectiveness of structural control measures, and locations where vehicles enter or exit the site. Inspections shall be performed at least once every 14 days and within 24 hours of the end of a storm event of 0.5 inches or greater. Where sites have been temporarily stabilized, runoff is unlikely due to winter conditions, or during seasonal arid periods in arid areas (0-10 inches of rainfall annually) and semi-arid areas (10-20 inches annually) such inspections shall be conducted at least once every month. This form is primarily intended for use with construction projects in Texas and New Mexico. Permittees on Indian Country lands in Oklahoma, Louisiana and Arkansas and some oil and gas facilities in Oklahoma may use this form if they are eligible for this permit. Other facilities need to check with their NPDES authority before using this form.

If you do not know your NPDES Permit Number, contact the NOI Processing Center at (301)495-4145. This form was prepared as an example and it is not a required form for use with the permit. Alternative forms may be used if they contain all of the required information as set forth in the permit. This form and additional information regarding the NPDES Region 6 storm water program may be found on the Internet at http://www.epa.gov/region6/sw/. Any person with a complaint about the operation of this facility in regards to this permit should contact EPA Region 6 at (214)665-7112.

Permit Number(s) covered by this inspection (e.g. owners, developers, general contractor, builders)	
Signature and Certification in accordance with Part VI.G of the permit:	I certify under penalty of law that this document and all attachments were prepared under my direction or supervision in accordance with a system designed to assure that qualified personnel properly gathered and evaluated the information submitted. Based on my inquiry of the person or persons who manage the system, or those persons directly responsible for gathering the information, the information submitted is, to the best of my knowledge and belief, true, accurate, and complete. I am aware that there are significant penalties for submitting false information, including the possibility of fine and imprisonment for knowing violations. Signature_____Date_____
Date of Inspection	
Inspector Name	
Is there a copy of the permit language with the SWPPP?	” YES ” NO
Is the inspector qualified and are the qualifications documented in the SWPPP?	” YES ” NO
Is an NPDES storm water construction sign posted at the entrance for all permittees?	” YES ” NO

You may want to use EPA Region 6 construction checklist to assure components of the SWPPP are complete. This form, the construction sign, and the checklist are available on the Region 6 NPDES Storm Water Forms and Documents web page which may be found on the internet at http://www.epa.gov/earth1r6/6en/w/formsw.htm In addition to the checklist, you should provide a narrative (see next page) on the existing Best Management Practices and Structural Controls found during each inspection. Any problems identified in an inspection should be corrected within 7 days. The inspection should cover all components of the SWPPP and all potential pollutants. While eroded soil is the primary pollutant of concern, do not forget to inspect for other pollutant sources such as fuel tanks, paints, solvents, stabilization materials, concrete hardner, batch plants, and construction debris. The inspector will need to update the SWPPP to reflect findings of the inspection. The site map should be updated after an inspection to show controls that have been added or removed, to ensure the site map is kept current in accordance with Part IV.C. of the permit.

Narrative Findings of the inspection:

Observations should include any findings of Best Management Practices or controls that are not in accordance with the SWPPP. If a control is not in place or failed, observe the reason why. A control removed temporarily for work is not necessarily a violation if properly recorded in the SWPPP. If it has been removed, record why it was removed and, if applicable, when it will be reinstalled. If the control has failed, observe the conditions so a conclusion may be made as to wether the control failed for improper maintenance or improper design. The qualified inspector will know when a failed control is inadequate and should be replaced by an improved control mechanism. Qualified inspectors are to have authority to make changes to the SWPPP to assure compliance. Controls that have not been installed should be given a reason why they are not installed and/or a scheduled date for installation if they are designed for a later phase of construction. After the inspection, the SWPPP and its site map should be updated to reflect current conditions of controls and Best Management Practices at the time of the inspection. This includes removing uninstalled controls from the site map or otherwise denoting on the site map if they are no longer installed if the controls have been removed because they are no longer necessary (e.g. stabilization has been achieved in that area).

Notice of Intent (NOI) for Storm Water Discharges Associated with Construction Activity under TPDES General Permit (TXR150000)

TCEQ Office Use Only
Permit No.: TXR15
RN:
CN:
Ref No:

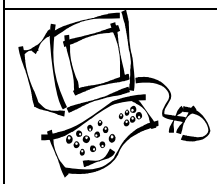

Sign up now for ePermits NOI at https://www6.tceq.state.tx.us/steers/
Get Instant Permit Coverage and only pay a $225 application fee.

Reset Form

If filing a paper NOI you can pay the application fee on line? Go to https://www6.tceq.state.tx.us/epay/

Select Fee Type: GENERAL PERMIT CONSTRUCTION STORM WATER DISCHARGE NOI APPLICATION

IMPORTANT:
- Use the **INSTRUCTIONS** to fill out each question in this form.
- Use the attached **CUSTOMER CHECKLIST** to make certain all you filled out all required information.
- Incomplete applications **WILL** delay approval or result in **automatic Denial**.

Renewal of General Permit
Is this NOI to renew an ACTIVE permit?
☐ Yes - What is your permit number? **Permit No. TXR15_____**
☐ No - a permit number will be issued.

Application Fee if mailing a paper NOI:
You must pay the **$325** Application Fee to TCEQ for the application to be considered complete.
Payment and NOI must be mailed to separate addresses. See instructions for correct mailing addresses.

Provide your payment information below, for us to verify payment of the application fee:

☐ Mailed:	Check/Money Order No.:	Company Name on checking account:
☐ EPAY:	Voucher No.:	Is the Payment Voucher copy attached? ☐ Yes

A. OPERATOR (applicant)

1. If the applicant is currently a customer with TCEQ, what is the Customer Number (CN) issued to this entity?
CN **(Search Central Registry)**

2. What is the Legal Name of the entity (applicant) applying for this permit?

(The legal name must be spelled exactly as filed with the Texas Secretary of State, County, or in the legal document forming the entity.)

3. What is the name and title of the person signing the application?

(The person must be an official meeting signatory requirements in TAC 305.43(a).)

Name:	Job Title:

4. What is the Operator's (applicant) mailing address as recognized by the **US Postal Service**? **(verify at USPS.com)**

Address:	Suite No./Bldg. No./Mail Code:	
City:	State:	ZIP Code:
Country Mailing Information (if outside USA).	Country Code:	Postal Code:

5. Phone No.: ( )	Extension:
6. Fax No.: ( )	E-mail Address:

7. Indicate the type of Customer:

☐ Individual	☐ Sole Proprietorship-D.B.A.	☐ Limited Partnership
☐ Corporation	☐ Federal Government	☐ General Partnership
☐ State Government	☐ County Government	☐ City Government
☐ Other Government	☐ Other (describe):	

8. Independent Operator: ☐ Yes ☐ No (If governmental entity, subsidiary, or part of a larger corporation, check "No".)

9. Number of Employees: ☐ 0-20; ☐ 21-100; ☐ 101-250; ☐ 251-500; or ☐ 501 or higher

10. Customer Business Tax and Filing Numbers *(This item is not applicable to Individuals, Government, GP or Sole Proprietor.)*
REQUIRED for Corporations and Limited Partnerships **(Verify the entity's status and filing no. with TX SOS at 512/463-5555)**

State Franchise Tax ID Number:	Federal Tax ID:
TX SOS Charter (filing) Number:	DUNS Number (if known):

B. APPLICATION CONTACT

If TCEQ needs additional information regarding this application, who should be contacted?

1. Name:	Title:	Company:
2. Phone No.: ( )	Extension:	
3. Fax No.:	E-mail Address:	

C. REGULATED ENTITY (RE) INFORMATION ON PROJECT OR SITE

1. TCEQ Issued RE Reference Number (RN): **RN**

(Search Central Registry)

2. Name of Project or Site (the name as known by the community where this facility/project is located):

42-INCH WATER LINE ALONG SANDPIPER, LUDINGTON, PEMBRIDGE AND WEST BELLFORT FROM WEST AIRPORT TO BRAES FOREST DRIVE

(example: phase and name of subdivision or name of project that's unique to the site)

3. Does the site have a physical address?

If Yes, complete **Section A** for a physical address.

If No, complete **Section B** for site location information.

Section A: Enter the physical address for the site. **(verify it with USPS.com or other delivery source)**

Street Number:	Street Name:
City:	ZIP Code:

Section B: Enter the site location information.

If no physical address (Street Number & Street Name), provide a written location access description to the site:
(Ex.: phase 1 of Woodland subdivision located 2 miles west from intersection of Hwy 290 & IH35 accessible on Hwy 290 South)
ALONG SANDPIPER, LUDINGTON, PEMBRIDGE AND WEST BELLFORT FROM WEST AIRPORT TO BRAES FOREST DRIVE

City where the site is located or nearest city to site:	ZIP Code where site is located:
CITY OF HOUSTON	77071 & 77035

4. Identify the county where the site is located: HARRIS COUNTY

5. Latitude: 29.65148964	Longitude: -95.50989731

6. What is the primary business of this entity? In your own words, briefly describe the primary business of the Regulated Entity:
(Do not repeat the SIC and NAICS code)

7. What is the mailing address for the regulated entity?

Is the RE mailing address the same as the Operator? ☐ Yes, address is the same as Operator ☐ No, provide the address

Street Number:	Street Name:	
City:	State:	ZIP Code:

D. GENERAL CHARACTERISTICS

1. Is the site located on Indian Country Lands? ☑ No ☐ Yes – If Yes, do not submit this NOI. Contact EPA, Region VI
If the site is on Indian country lands, you must obtain authorization through EPA, Region VI.

2. What is the Standard Industrial Classification (SIC) code (see instructions for common codes): **(Search Osha.gov)**

Primary: 1623 Secondary: _____

3(a) What is the total number of acres disturbed? 7.09

3(b) Is the project site part of a larger common plan of development or sale? ☐ Yes ☑ No

If **Yes**, the total number of acres disturbed can be less than 5 acres.

If **No**, the total number of acres disturbed must be 5 or more. If the total number of acres disturbed is less than 5 then the project site does not qualify for coverage through this Notice of Intent. Coverage will be denied. See the requirements in the general permit for small construction sites.

4. Discharge Information (all information MUST be provided or the permit will be denied)

4(a) What is the name of the water body(s) to receive the storm water runoff or potential runoff from the site?

FONDREN DIVERSION CHANNEL (HCFCD UNIT D140-00-00)

4(b) What is the segment number(s) of the classified water body(s) that the discharge or potential discharge will eventually reach? 1007 (Houston Ship Channel)

4(c) Are any of the surface water bodies receiving discharges from the construction site on the latest EPA-approved CWA 303(d) list of impaired waters?

☐ Yes ☑ No

If Yes, provide the name of the impaired water body(s). _____

4(d) Is the discharge into an MS4? ☑ Yes ☐ No

If **Yes**, what is the name of the MS4 Operator? CITY OF HOUSTON

Note: The general permit requires you to send a copy of the NOI to the MS4 Operator.

4(e) Is the discharge or potential discharge within the Recharge Zone, Contributing Zone, or Contributing Zone within the Transition Zone of the Edwards Aquifer?

☐ Yes ☑ No

If the answer is Yes, please note that a copy of the agency approved Plan required by the Edwards Aquifer Rule (30 TAC Chapter 213) must be included or referenced in the Storm Water Pollution Prevention Plan.

E. CERTIFICATION

Check "Yes" to the certifications below. **Failure to certify to all items will result in denial.**

☐ Yes	I certify that I have obtained a copy and understand the terms and conditions of the general permit (TXR150000).
☐ Yes	I certify that the full legal name of the entity (Operator) applying for this permit has been provided and is legally authorized to do business in Texas.
☐ Yes	I understand that a Notice of Termination (NOT) must be submitted when this authorization is no longer needed.
☐ Yes	I certify that a storm water pollution prevention plan has been developed and implemented prior to construction, and that is compliant with any applicable local sediment and erosion control plans and prepared and implemented as required in the general permit TXR150000.

Operator Certification:

I, _____ _____

Typed or printed name *(Required & must be legible)* Title *(Required & legible)*

certify under penalty of law that this document and all attachments were prepared under my direction or supervision in accordance with a system designed to assure that qualified personnel properly gather and evaluate the information submitted. Based on my inquiry of the person or persons who manage the system, or those persons directly responsible for gathering the information, the information submitted is, to the best of my knowledge and belief, true, accurate, and complete. I am aware there are significant penalties for submitting false information, including the possibility of fine and imprisonment for knowing violations.

I further certify that I am authorized under **30 Texas Administrative Code §305.44** to sign and submit this document, and can provide documentation in proof of such authorization upon request.

Signature:_____ Date:_____

(Use blue ink)

Did you complete everything? Use this checklist to be sure!

Are you ready to mail your form to TCEQ? Go to the General Information Section of the Instructions for mailing addresses.

	Customer GP Notice of Intent Checklist **TXR150000**
√	This checklist is for use by the operator to ensure a complete application. Missing information may result in denial of coverage under the permit. (See NOI Process description in the Instructions)
☐	**Application Fee of $325.00** was mailed separately to TCEQ's Cashiers's Office (separate from the NOI) or the EPAY payment voucher is attached.
	OPERATOR INFORMATION - Confirm each item is complete:
☐	√ Customer Number (CN) issued by TCEQ Central Registry
☐	Legal Name as filed to do business in Texas (Call TX SOS 512/463-5555)
☐	Name and Title of person signing the application. This person must meet signatory requirements in 30 TAC Section 305.43
☐	Operator Mailing Address is complete & verifiable with USPS. www.usps.com
☐	Phone Numbers/E-mail Address
☐	Type of Operator (Entity Type)
☐	Independent Operator
☐	Number of Employees
☐	For Corporations or Limited Partnerships – Tax ID and SOS Filing numbers are REQUIRED
	Application Contact person we can call for questions about this application.
	REGULATED ENTITY (RE) INFORMATION ON PROJECT OR SITE - Confirm each item is complete:
☐	√ Regulated Entity Reference Number (RN) (if site is already regulated by TCEQ)
☐	Site/Project Name/Regulated Entity
☐	Site/Project (RE) Physical Address Please do not use a rural route or post office box for a site location
☐	**Or** if no physical address, the location information that includes description, zip code and city is listed.
☐	Latitude and Longitude TCEQ USGS Topographic Map Viewer or TerraServer-USA
☐	Business description
☐	Site Mailing Address (checked same as operator or complete & verifiable with USPS. www.usps.com)
	GENERAL CHARACTERISTICS - Confirm each item is complete:
☐	√ Indian Country Lands –the facility is not on Indian Country Lands
☐	Standard Industrial Classification (SIC) code www.osha.gov/oshstats/sicser.html
☐	Acres Disturbed is provided and qualifies for coverage through a NOI.
☐	Common plan of development or for sale?
☐	Discharge Information:
☐	receiving water body
☐	segment number(s) is REQUIRED
☐	water body on the latest EPA-Approved Clean Water Act 303(d) list of impaired waters
☐	MS4 Operator
☐	Edwards Aquifer Rule
☐	**CERTIFICATION** Certification statements have been checked indicating "Yes" Signature meets 30 Texas Administrative Code (TAC) §305.44 and is original and has been provided for the Operator.

Notice of Intent (NOI) for Storm Water Discharges Associated with Construction Activity under TPDES General Permit (TXR150000)
General Information and Instructions

GENERAL INFORMATION

Where to Send the Notice of Intent (NOI) and other related forms:

BY REGULAR U.S. MAIL
Texas Commission on Environmental Quality
Storm Water Processing Center (MC228)
P.O. Box 13087
Austin, TX 78711-3087

BY OVERNIGHT/EXPRESS MAIL
Texas Commission on Environmental Quality
Storm Water Processing Center (MC228)
12100 Park 35 Circle
Austin, TX 78753

TCEQ Contact list:

Application Processing Questions relating to the status and form requirements:	512/239-3700, 512/245-0130 or swpermit@tceq.state.tx.us
Technical Questions relating to the general permit:	512/239-4671 or swgp@tceq.state.tx.us
Environmental Law Division:	512/239-0600
Records Management for obtaining copies of forms submitted to TCEQ:	512/239-0900
Information Services for obtaining reports from program data bases (as available):	512/239-DATA (3282)
Financial Administration's Cashier's office:	512/239-0357 or 512/239-0187

Notice of Intent Process:

When your NOI is received by the program, the form will be processed as follows:

1. **Administrative Review:** Each item on the form will be reviewed for a complete response. In addition, the operator's legal name must be verified with Texas Secretary of State as valid and active (if applicable). The address(s) on the form must be verified with the US Postal service as an address receiving regular mail delivery. Never give an overnight/express mailing address.

2. **Notice of Deficiency:** If an item is incomplete or not verifiable as indicated above, a notice of deficiency (NOD) will be mailed to the operator. The operator will have 30 days to respond to the NOD. The response will be reviewed for completeness.

3. **Acknowledgment of Coverage:** An Acknowledgment Certificate will be mailed to the operator. This certificate acknowledges coverage under the general permit.

-or-

Denial of Coverage: If the application is too incomplete to process, or the operator fails to respond to the NOD or the response is inadequate, coverage under the general permit may be denied. If coverage is denied, the operator will be notified.

General Permit (Your Permit)

If filing the NOI through ePermits online application, coverage under the general permit begins the day the NOI is submitted to TCEQ through epermits. **Sign up now for on line NOI at https://www6.tceq.state.tx.us/steers/**

If mailing a paper NOI, coverage under the general permit begins **seven (7) days after a completed NOI is postmarked for delivery to** the TCEQ. You should have a copy of your general permit when submitting your application.

You may view and print your permit for which you are seeking coverage, on the TCEQ web site http://www.tceq.state.tx.us/permitting/water_quality/stormwater/TXR15_AIR.html.

General Permit Forms

The Notice of Intent (NOI), Notice of Termination (NOT), and Notice of Change (NOC) #20391 with instructions are available in Adobe Acrobat PDF format on the TCEQ web site http://www.tceq.state.tx.us/permitting/water_quality/stormwater/TXR15_AIR.html.

Sign up now for on line Notice of Termination application at https://www6.tceq.state.tx.us/steers/

Change in Operator

An authorization under the general permit is not transferable. If the operator or owner of the regulated entity changes, the present permittee must submit a Notice of Termination and the new operator must submit a Notice of Intent. The NOT and NOI must be submitted not later than 10 days prior to the change in Operator status.

TCEQ Central Registry Core Data Form
The Core Data Form has been incorporated into this form. **Do not send a core data form to TCEQ.**

After final acknowledgment of coverage under the general permit, the program will assign a Customer Number (CN) and Regulated Entity Number (RN). For Construction Permits, a new RN will be assigned for each Notice of Intent filed with TCEQ, since construction project sites can overlap with other Customers. The RN assigned to your construction project will not be assigned to any other TCEQ authorization.

You can find the information on the Central Registry web site at www4.tceq.state.tx.us/crpub. You can search by the Regulated Entity (RN), Customer Number (CN) or Name (Permittee), or by your permit number under the search field labeled "Additional ID". Capitalize all letters in the permit number.

The Customer (Permittee) is responsible for providing consistent information to the TCEQ, and for updating all CN and RN data for all authorizations as changes occur. For General Permits, a Notice of Change form must be submitted to the program area.

Application Fees:

$225.00 application fee if submitting the NOI through ePermits.
$325.00 application fee if submitting a paper NOI for processing.

The application fee is required to be paid at the time the NOI is submitted. Failure to submit payment at the time the application is filed will cause delay in acknowledgment or denial of coverage under the general permit.

- Mailed Payments:

DO NOT mail your check with the original Notice of Intent application.
Use the attached Application Fee payment submittal form is mailing the payment. Do not include a copy of the NOI.

BY REGULAR U.S. MAIL
Texas Commission on Environmental Quality
Financial Administration Division
Cashier's Office, MC-214
P.O. Box 13088
Austin, TX 78711-3088

BY OVERNIGHT/EXPRESS MAIL
Texas Commission on Environmental Quality
Financial Administration Division
Cashier's Office, MC-214
12100 Park 35 Circle
Austin, TX 78753

- ePAY Electronic Payment:

Go to https://www6.tceq.state.tx.us/epay
Select Water Quality, then select the fee category "GENERAL PERMIT CONSTRUCTION STORM WATER DISCHARGE NOI APPLICATION".
You must include a copy of the payment voucher with your NOI. Your NOI will not be considered complete without the payment voucher.

The Annual Water Quality Fee has been consolidated into the Application Fee effective March 5, 2008. An annual fee will not be assessed and billed to operators on 9/1/2008. This does not relieve the operator of fees due for prior fiscal year assessments.

The operator will continue to receive an invoice for payment of any past due annual fee. A 5% penalty will be assessed if the payment is received by TCEQ after the due date. Annual fee assessments cannot be waived as long as the authorization under the general permit was active on September 1 of the FY billed.

INSTRUCTIONS FOR FILLING OUT THE NOI FORM

A. OPERATOR (As defined in the general permit.)

1. TCEQ Issued Customer Number (CN)

TCEQ's Central Registry will assign each customer a number that begins with "CN," followed by nine digits. **This is not a permit number**, registration number, or license number.

- If this customer has not been assigned a Customer Reference Number, leave the space for the Customer Reference Number blank.
- If this customer has already been assigned this number, enter the operator's Customer Reference Number in the space provided.

2. Legal Name

Provide the legal name of the facility operator, as authorized to do business in Texas. The name must be provided exactly as filed with the Texas Secretary of State (SOS), or on other legal documents forming the entity, that is filed in the county where doing business. You may contact the SOS at 512/463-5555, or go to http://www.sos.state.tx.us/corp/contact.shtml for more information related to filing in Texas. If filed in the county where doing business, provide a copy of the legal documents showing the legal name.

3. Name and Title of person signing the Notice of Intent application form. Signature meets 30 Texas Administrative Code (TAC) §305.44

4. Operator Mailing Address

Provide a complete mailing address for receiving mail from the TCEQ. The address must be verifiable with the US Postal Service at www.usps.com, for regular mail delivery (not overnight express mail). If you find that the address is not verifiable using the USPS web search, please indicate the address is used by the USPS for regular mail delivery.

5. Phone Number

This number should correspond to this customer's mailing address given earlier. Enter the area code and phone number here. Leave "Extension" blank if this customer's phone system lacks this feature.

6. Fax Number and E-mail Address

This number and E-mail address should correspond to operator's mailing address provided earlier. (Optional Information)

7. Type of Entity

Check only one box that identifies the type of entity. Use the descriptions below to identify the appropriate entity type:

Individual is a customer who has not established a business, but conducts an activity that needs to be regulated by the TCEQ.

Sole Proprietorship— D.B.A. is a customer that is owned by only one person and has not been incorporated. This business may:

- be under the person's name
- have its own name ("doing business as," or d.b.a.)
- have any number of employees

Partnership is a customer that is established as a partnership as defined by the Texas Secretary of State's Office.

Corporation is a customer that meets all of these conditions:

- is a legally incorporated entity under the laws of any state or country
- is recognized as a corporation by the Texas Secretary of State
- has proper operating authority to operate in Texas.

Government - Federal, state, county, or city government (as appropriate)
the customer is either an agency of one of these levels of government or the governmental body itself.

Other is Estate, Trust, etc.
the customer does not fit one of the above descriptions. Enter a short description of the type of customer in the blank provided.

8. Independent Operator

Check "No" if this customer is a subsidiary, part of a larger company, or is a governmental entity. Otherwise, check "Yes."

9. Number of Employees

Check one box to show the number of employees for this customer's entire company, at all locations. This is not necessarily the number of employees at the site named in the NOI.

10. State Franchise Tax ID Number

Corporations and limited liability companies that operate in Texas are issued a franchise tax identification number. If this customer is a corporation or limited liability company, enter this number here.

Federal Tax ID

All businesses, except for some small sole proprietors, individuals, or general partnerships should have a federal taxpayer identification number (TIN). Enter this number here. Use no prefixes, dashes, or hyphens. Sole proprietors, individuals, or general partnerships do not need to provide a federal tax ID.

TX SOS Charter (filing) Number

Corporations and Limited Partnerships required to register with the Texas Secretary of State are issued a charter or filing number. You may obtain further information by calling SOS at 512/463-5555 http://www.sos.state.tx.us/corp/contact.shtml.

DUNS Number
Most businesses have a DUNS (Data Universal Numbering System) number issued by Dun and Bradstreet Corp. If this customer has one, enter it here.

B. Application Contact

Provide the name, title and communication information of the person that TCEQ can contact for additional information regarding this application.
If the application is missing information and there is no contact person to call, the application may be denied.

C. REGULATED ENTITY (RE) INFORMATION ON PROJECT OR SITE

1. Regulated Entity Reference Number (RN)

This is a number issued by TCEQ's Central Registry to sites (a location where a regulated activity occurs) regulated by TCEQ. This is not a permit number, registration number, or license number.

- If this Regulated Entity has not been assigned a Regulated Entity Number, leave this space blank.
- If this customer has been assigned this number, enter the operator's Regulated Entity Number.

2. Site/Project Name/Regulated Entity
If the site is already regulated by TCEQ, use the same name as on the existing Regulated Entity Reference Number (RN).

If new, provide the name of the site as known by the public in the area where the site is located. The name you provide on this application will be used in the TCEQ Central Registry as the Regulated Entity.

3. Site/Project (RE) Physical Address

Section A: Enter the complete physical address of where the site is located. This must be a street number and street name for a complete physical address. This address must be validated through US Postal Service or your local police (911 service) as a valid address. Please confirm this to be a complete and valid address. In some rural areas, new addresses are being assigned to replace rural route addresses.
Please do not use a rural route or post office box for a site location.

Section B: If a site does not have an actual physical address that includes a street number and street name, then provide a complete written location access description, and the zip code and city where the site is located.
For example: "The site is located 2 miles west from intersection of Hwy 290 & IH35, located on the southwest corner of the Hwy 290 South bound lane." This includes authorizations for construction projects such as highways and subdivision.

4. Identify the County where the site is located. If the site covers more than one county, provide the county that is most affected by the authorized activity and list the additional county(s) as secondary.

5. Latitude and Longitude
Enter the latitude and longitude of the site in either degrees, minutes, and seconds or decimal form. For help obtaining the latitude and longitude, go to: TCEQ USGS Topographic Map Viewer or TerraServer-USA

6. Description of Activity Regulated
In your own words, briefly describe the primary business being conducted at the site. (A description specific to what you are doing that requires this authorization - Do not repeat the SIC Code(s).)

SITE MAILING ADDRESS

Provide a complete mailing address to be used by TCEQ for receiving mail at the site. In most cases, the address is the same as the operator. If so, simply place a check mark in the box. If you provide a different address, please verify the address with USPS as instructed above for the operator address.

D. GENERAL CHARACTERISTICS

1. **Indian Country Lands**
If your site is located on Indian Country Lands, the TCEQ does not have authority to process your application. You must obtain authorization through EPA, Region VI, Dallas. Do not submit this form to TCEQ.

Indian Country means (1) all land within the limits of any American Indian reservation under the jurisdiction of the U.S. government, notwithstanding the issuance of any patent, and including rights-of-way running throughout the reservation; (2) all dependent Indian communities within the borders of the United States whether within the original or subsequently acquired territory thereof, and whether within or outside the limits of a State; and (3) all Indian allotments, the Indian titles which have not been extinguished, including rights-of-way running through the same.

Indian Tribe means any Indian Tribe, band, nation, or community recognized by the Secretary of the Interior and exercising substantial governmental duties and powers.

2. **Standard Industrial Classification (SIC) code**
Provide the SIC code that best describes the construction activity being conducted at the site.
Common SIC Codes related to construction activities include: 1521 Construction of Single Family Homes; 1522 Construction of Residential Bldgs. Other than Single Family Homes; 1541 Construction of Industrial Bldgs. and Warehouses; 1542 Construction of Non-residential Bldgs. other than Industrial Bldgs. and Warehouses; 1611 Highway & Street Construction, except Highway Construction; 1622 Bridge, Tunnel, & Elevated Highway Construction; 1623 Water, Sewer, Pipeline & Communications, and Power Line Construction. For help with SIC codes, go to: www.osha.gov/oshstats/sicser.html

3. **Estimated Area of Land Disturbed**
3(a). Provide the approximate number of acres that the construction site will disturb.
3(b). Indicate is the site is part of a common plan of development or for sale.

Construction activities that disturb less than one acre, unless they are part of a larger common plan that disturbs more than one acre, do not require permit coverage.

Construction activities that disturb between one and five acre, unless they are part of a common plan that disturbs five acres or more acres, do not require submission of an NOI. Therefore, the estimated area of land disturbed should not be less than five, unless the project is part of a larger common plan that disturbs five or more acres.

"Disturb" means any clearing, grading, excavating, or other similar activities. If you have any questions about this item, please call the storm water technical staff at (512)239-4671.

4. **Discharge Information**
4 (a). The storm water may be discharged directly to a receiving stream or through a **MS4*** from your site. It eventually reaches a receiving water body such as a local stream or lake, possibly via a drainage ditch. You must provide the name of the water body that receives the discharge from the site (a local stream or lake).

4 (b). The classified segment number(s) is REQUIRED to get coverage. Go to the link to find the segment number of the classified water body where storm water will flow http://www.tceq.state.tx.us/compliance/monitoring/water/quality/data/wqm/viewer/viewer.html . Call Water Quality Assessments at 512/239-4671 for further assistance. Another source for segments is: http://www.tceq.state.tx.us/comm_exec/forms_pubs/pubs/gi/gi-316/index.html

4 (c). If any surface water body(s) receiving discharges from the construction site are on the latest EPA-approved CWA § 303(d) list of impaired waters, provide the name(s) of the water body(s).

EPA approved CWA 303d list of impaired waters can be found at: Texas Water Quality Inventory and 303(d) List - Texas Commission on Environmental Quality - www.tceq.state.tx.us

4 (d). Identify the **MS4*** Operator name if the storm water discharge is into an MS4.

***MS4 is an acronym for Municipal separate storm sewer system. MS4 is defined as** a separate storm sewer system owned or operated by a state, city, town, county, district, association, or other public body (created by or pursuant to state law) having jurisdiction over disposal of sewage, industrial wastes, storm water, or other wastes, including special districts under state law such as a sewer district, flood control or drainage district, or similar entity, or an Indian tribe or an authorized Indian tribal organization, that discharges to water in the state.

For assistance, you may call the technical staff of the Water Quality Assessment & Standards Section at 512/239-4671.

4 (e). **Edwards Aquifer Rule**
See maps on the TCEQ website to determine if the site is located within the Recharge Zone, Contributing Zone, or Contributing Zone within the Transition Zone of the Edwards Aquifer at http://www.tceq.state.tx.us/compliance/field_ops/eapp/viewer.html.

If the discharge or potential discharge is within the Recharge Zone, Contributing Zone, or Contributing Zone within the Transition Zone of the Edwards Aquifer, a site specific authorization approved by the Executive Director under the Edwards Aquifer Protection Program (30 TAC Chapter 213) is required before construction can begin.

The general permit requires the approved Contributing Zone Plan or Water Pollution Abatement Plan to be included as a part of the Storm Water Pollution Prevention Plan. The certification must be answered "Yes" for coverage under the general permit.

E. CERTIFICATIONS

Failure to indicate "Yes" to ALL of the certification items may result in denial of coverage under the general permit.

The certification must bear an original signature of a person meeting the signatory requirements specified under **30 Texas Administrative Code §305.44**

IF YOU ARE A CORPORATION:

The regulation that controls who may sign an NOI or similar form is 30 Texas Administrative Code §305.44(a)(1) (see below). According to this code provision, any corporate representative may sign an NOI or similar form so long as the authority to sign such a document has been delegated to that person in accordance with corporate procedures. By signing the NOI or similar form, you are certifying that such authority has been delegated to you. The TCEQ may request documentation evidencing such authority.

IF YOU ARE A MUNICIPALITY OR OTHER GOVERNMENT ENTITY:

The regulation that controls who may sign an NOI or similar form is 30 Texas Administrative Code §305.44(a)(3) (see below). According to this code provision, only a ranking elected official or principal executive officer may sign an NOI or similar form. Persons such as the City Mayor or County Commissioner will be considered ranking elected officials. In order to identify the principal executive officer of your government entity, it may be beneficial to consult your city charter, county or city ordinances, or the Texas statute(s) under which your government entity was formed. An NOI or

similar document that is signed by a government official who is not a ranking elected official or principal executive officer does not conform to §305.44(a)(3). The signatory requirement may not be delegated to a government representative other than those identified in the regulation. By signing the NOI or similar form, you are certifying that you are either a ranking elected official or principal executive officer as required by the administrative code. Documentation demonstrating your position as a ranking elected official or principal executive officer may be requested by the TCEQ.

If you have any questions or need additional information concerning the signatory requirements discussed above, please contact the Texas Commission on Environmental Quality's Environmental Law Division at 512/239-0600.

30 Texas Administrative Code
§305.44. Signatories to Applications.

(a) All applications shall be signed as follows.

(1) For a corporation, the application shall be signed by a responsible corporate officer. For purposes of this paragraph, a responsible corporate officer means a president, secretary, treasurer, or vice-president of the corporation in charge of a principal business function, or any other person who performs similar policy or decision-making functions for the corporation; or the manager of one or more manufacturing, production, or operating facilities employing more than 250 persons or having gross annual sales or expenditures exceeding $25 million (in second-quarter 1980 dollars), if authority to sign documents has been assigned or delegated to the manager in accordance with corporate procedures. Corporate procedures governing authority to sign permit or post-closure order applications may provide for assignment or delegation to applicable corporate positions rather than to specific individuals.

(2) For a partnership or sole proprietorship, the application shall be signed by a general partner or the proprietor, respectively.

(3) For a municipality, state, federal, or other public agency, the application shall be signed by either a principal executive officer or a ranking elected official. For purposes of this paragraph, a principal executive officer of a federal agency includes the chief executive officer of the agency, or a senior executive officer having responsibility for the overall operations of a principal geographic unit of the agency (e.g., regional administrator of the EPA).

Texas Commission on Environmental Quality
General Permit Payment Submittal Form
$325 for a paper Construction NOI Application Fee

Use this form to submit your Application Fee only if you are mailing your payment.

- Complete items 1 through 5 below:
- Staple your check in the space provided at the bottom of this document.
- Do not mail this form with your NOI form.
- Do not mail this form to the same address as your NOI.

Mail this form and your check to:

BY REGULAR U.S. MAIL	BY OVERNIGHT/EXPRESS MAIL
Texas Commission on Environmental Quality Financial Administration Division Cashier's Office, MC-214 P.O. Box 13088 Austin, TX 78711-3088	Texas Commission on Environmental Quality Financial Administration Division Cashier's Office, MC-214 12100 Park 35 Circle Austin, TX 78753

Fee Code: **GPA** General Permit: TXR150000

1. Check / Money Order No:
2. Amount of Check/Money Order:
3. Date of Check or Money Order:
4. Name on Check or Money Order:

5. NOI INFORMATION

If the check is for more than one NOI, list each Project/Site (RE) Name and Physical Address exactly as provided on the NOI. DO NOT SUBMIT A COPY OF THE NOI WITH THIS FORM AS IT COULD CAUSE DUPLICATE PERMIT ENTRIES.

See Attached List of Sites (If more space is needed, you may attach a list.)

Project/Site (RE) Name:

Project/Site (RE) Physical Address:

Staple Check In This Space

Notice of Termination (NOT) for Authorizations under TPDES General Permit TXR150000

TCEQ Office Use Only
Permit No.:
RN:
CN:

Reset Form

Sign up now for on line NOT at http://www.tceq.state.tx.us/permitting/steers/steers.html
Get your NOT Confirmation letter immediately after submitting the on line NOT form.

What is the permit number to be terminated?
Processing will be delayed without the permit number. TXR15_____

A. OPERATOR (applicant)

1. What is the Customer Number (CN) issued to this entity? **CN**
2. What is the full Legal Name of the current permittee?

This must be the current permittee of the permit to be terminated.

3. What is the applicant's mailing address as recognized by the **US Postal Service**?

Address:	Suite No./Bldg. No./Mail Code:	
City:	State:	ZIP Code:
Country Mailing Information (if outside USA).	Country Code:	Postal Code:

4. Phone No.: ( )	Extension:
5. Fax No.: ( )	E-mail Address:

B. REGULATED ENTITY (RE) INFORMATION ON PROJECT OR SITE

1. What is the TCEQ Issued RE Reference Number (RN)? **RN**
2. Name of Project or Site as currently permitted):
   42" WATERLINE-SANDPIPER, LUDINGTON, PEMBRIDGE & W BELLFORT-W AIRPORT TO BRAES FOREST
(example: phase and name of subdivision or name of project that's unique to the site)
3. Physical Address of Project or Site as currently permitted: (enter in spaces below)

Street Number:	Street Name:	
City: HOUSTON	ZIP Code: 77071 & 77035	County (Counties if >1): HARRIS COUNTY

4. If no physical address (Street Number & Street Name), provide the written location access description to the site:
   ALONG SANDPIPER, LUDINGTON, PEMBRIDGE AND W BELLFORT FROM W AIRPORT TO BRAES FOREST DR

C. REASON FOR TERMINATION

Check the reason for termination:

- ☐ Final stabilization has been achieved on all portions of the site that are the responsibility of the Operator and all silt fences and other temporary erosion controls have either been removed, or scheduled for removal as defined in the SWP3.
- ☐ Another permitted Operator has assumed control over all areas of the site that have not been finally stabilized, and temporary erosion controls that have been defined in the SWP3 have been transferred to the new Operator.
- ☐ The activity is now authorized under an alternate TPDES permit.
- ☐ The activity never began at this site that is regulated under the general permit.

D. CERTIFICATION

I, _____ _____
Typed or printed name Title

certify under penalty of law that this document and all attachments were prepared under my direction or supervision in accordance with a system designed to assure that qualified personnel properly gather and evaluate the information submitted. Based on my inquiry of the person or persons who manage the system, or those persons directly responsible for gathering the information, the information submitted is, to the best of my knowledge and belief, true, accurate, and complete. I am aware there are significant penalties for submitting false information, including the possibility of fine and imprisonment for knowing violations.

I further certify that I am authorized under **30 Texas Administrative Code §305.44** to sign and submit this document, and can provide documentation in proof of such authorization upon request.

Signature:_____ Date:_____
(Use blue ink)

Notice of Termination (NOT) for Authorizations under TPDES General Permit TXR150000 General Information and Instructions

GENERAL INFORMATION

Where to Send the Notice of Intent (NOI):

BY REGULAR U.S. MAIL
Texas Commission on Environmental Quality
Storm Water Processing Center (MC228)
P.O. Box 13087
Austin, TX 78711-3087

BY OVERNIGHT/EXPRESS MAIL
Texas Commission on Environmental Quality
Storm Water Processing Center (MC228)
12100 Park 35 Circle
Austin, TX 78753

TCEQ Contact list:

Application Processing Questions relating to the status and form requirements:	512/239-4671
Technical Questions relating to the general permit:	512/239-4671
Environmental Law Division:	512/239-0600
Records Management for obtaining copies of forms submitted to TCEQ:	512/239-0900
Information Services for obtaining reports from program data bases (as available):	512/239-DATA (3282)
Financial Administration's Cashier's office:	512/239-0357 or 512/239-0187

Notice of Termination Process:

A Notice of Termination is **effective on the date postmarked for delivery to TCEQ**.
When your NOT is received by the program, the form will be processed as follows:

1. **Administrative Review:** The form will be reviewed to confirm the following:
   - the permit number is provided
   - the permit is active and has been approved
   - the entity terminating the permit is the current permittee
   - the site information matches the original permit record
   - the form has the required original signature with title and date

2. **Notice of Deficiency:** If an item is incomplete or not verifiable as indicated above, a phone call will be made to the applicant to clear the deficiency. A letter will not be sent to the permittee if unable to process the form.

3. **Confirmation of Termination:** A Notice of Termination Confirmation letter will be mailed to the operator.

General Permit (Your Permit)
Coverage under the general permit begins **48 hours after a completed NOI is postmarked for delivery to** the TCEQ. You should have a copy of your general permit when submitting your application. You may view and print your permit for which you are seeking coverage, on the TCEQ web site www.tceq.state.tx.us

General Permit Forms
The Notice of Intent (NOI), Notice of Termination (NOT), and Notice of Change (NOC) with instructions are available in Adobe Acrobat PDF format on the TCEQ web site www.tceq.state.tx.us.

Change in Operator
An authorization under the general permit is not transferable. If the operator or owner of the regulated entity changes, the present permittee must submit a Notice of Termination and the new operator must submit a Notice of Intent. The NOT and NOI must be submitted not later than 10 days prior to the change in Operator status.

TCEQ Central Registry Core Data Form
The Core Data Form has been incorporated into this form. **Do not send a core data form to TCEQ.**

After final acknowledgment of coverage under the general permit, the program will assign a Customer Number (CN) and Regulated Entity Number (RN). For Construction Permits, a new RN will be assigned for each Notice of Intent filed with TCEQ, since construction project sites can overlap with other Customers. The RN assigned to your construction project will not be assigned to any other TCEQ authorization.

You can find the information on the Central Registry web site at www4.tceq.state.tx.us/crpub. You can search by the Regulated Entity (RN), Customer Number (CN) or Name (Permittee), or by your permit number under the search field labeled "Additional ID". Capitalize all letters in the permit number.

The Customer (Permittee) is responsible for providing consistent information to the TCEQ, and for updating all CN and RN data for all authorzations as changes occur. For General Permits, a Notice of Change form must be submitted to the program area.

Annual Water Quality Fee: This fee is assessed to operators with an active authorization under the general permit on September 1 of each year. The operator will receive an invoice for payment of the annual fee in November of each year. The payment will be due 30 days from the invoice date. A 5% penalty will be assessed if the payment is received by TCEQ after the due date. Annual fee assessments cannot be waived as long as the authorization under the general permit is active on September 1.

It's important for the operator to submit a **Notice of Termination** (NOT) when coverage under the general permit is no longer required. A NOT is effective on the postmarked date of mailing the form to TCEQ. It is recommended that the NOT be mailed using a method that documents the date mailed and received by TCEQ.

- Mailed Payments:

You must return your payment with the billing coupon provided with the billing statement.

- ePAY Electronic Payment:

Go to www.tceq.state.tx.us/epay
You must enter your account number provided at the top portion of your billing statement. Payment methods include Mastercard, Visa, and electronic check payment (ACH). A transaction over $500 can only be made by ACH.

INSTRUCTIONS FOR FILLING OUT THE NOT FORM

A. OPERATOR (current permittee.)

1. TCEQ Issued Customer Number (CN)

2. Legal Name of Operator
The operator must be the same entity as previously submitted on the original Notice of Intent for the permit number provided.

3. Operator Mailing Address
Provide a complete mailing address for receiving mail from the TCEQ. Update the address if different than previously submitted in the Notice of Intent or Notice of Change.

4. Phone Number, Fax Number, and E-mail Address
Provide updated contact information.

B. REGULATED ENTITY (RE) INFORMATION ON PROJECT OR SITE

1. Regulated Entity Reference Number (RN)

2. Site/Project Name/Regulated Entity
Provide the name of the site as previously submitted in the Notice of Intent for the permit number provided.

3. Site/Project (RE) Physical Address
Provide the physical address or location access description as previously submitted for the permit number provided.

C. REASON FOR TERMINATION

Indicate the reason for terminating the permit by checking one of the options. If the reason is not listed then provide an attachment that explains the reason for termination.

Please read your general permit carefully to determine when to terminate your permit. Permits will not be reactivated after submitting a termination form. The termination is effective on the date postmarked for delivery to TCEQ.

D. CERTIFICATIONS

The certification must bear an original signature of a person meeting the signatory requirements specified under 30 Texas Administrative Code (TAC) §305.44.

IF YOU ARE A CORPORATION:

The regulation that controls who may sign an NOI or similar form is 30 Texas Administrative Code §305.44(a)(1) (see below). According to this code provision, any corporate representative may sign an NOI or similar form so long as the authority to sign such a document has been delegated to that person in accordance with corporate procedures. By signing the NOI or similar form, you are certifying that such authority has been delegated to you. The TCEQ may request documentation evidencing such authority.

IF YOU ARE A MUNICIPALITY OR OTHER GOVERNMENT ENTITY:

The regulation that controls who may sign an NOI or similar form is 30 Texas Administrative Code §305.44(a)(3) (see below). According to this code provision, only a ranking elected official or principal executive officer may sign an NOI or similar form. Persons such as the City Mayor or County Commissioner will be considered ranking elected officials. In order to identify the principal executive officer of your government entity, it may be beneficial to consult your city charter, county or city ordinances, or the Texas statute(s) under which your government entity was formed. An NOI or similar document that is signed by a government official who is not a ranking elected official or principal executive officer does not conform to

§305.44(a)(3). The signatory requirement may not be delegated to a government representative other than those identified in the regulation. By signing the NOI or similar form, you are certifying that you are either a ranking elected official or principal executive officer as required by the administrative code. Documentation demonstrating your position as a ranking elected official or principal executive officer may be requested by the TCEQ.

If you have any questions or need additional information concerning the signatory requirements discussed above, please contact the Texas Commission on Environmental Quality's Environmental Law Division at 512/239-0600.

30 Texas Administrative Code
§305.44. Signatories to Applications.

(a) All applications shall be signed as follows.

(1) For a corporation, the application shall be signed by a responsible corporate officer. For purposes of this paragraph, a responsible corporate officer means a president, secretary, treasurer, or vice-president of the corporation in charge of a principal business function, or any other person who performs similar policy or decision-making functions for the corporation; or the manager of one or more manufacturing, production, or operating facilities employing more than 250 persons or having gross annual sales or expenditures exceeding $25 million (in second-quarter 1980 dollars), if authority to sign documents has been assigned or delegated to the manager in accordance with corporate procedures. Corporate procedures governing authority to sign permit or post-closure order applications may provide for assignment or delegation to applicable corporate positions rather than to specific individuals.

(2) For a partnership or sole proprietorship, the application shall be signed by a general partner or the proprietor, respectively.

(3) For a municipality, state, federal, or other public agency, the application shall be signed by either a principal executive officer or a ranking elected official. For purposes of this paragraph, a principal executive officer of a federal agency includes the chief executive officer of the agency, or a senior executive officer having responsibility for the overall operations of a principal geographic unit of the agency (e.g., regional administrator of the EPA).

Attachment 4

LARGE CONSTRUCTION SITE NOTICE

FOR THE
Texas Commission on Environmental Quality (TCEQ)
Storm Water Program

TPDES GENERAL PERMIT TXR150000

"PRIMARY OPERATOR" NOTICE

This notice applies to construction sites operating under Part II.E.3. of the TPDES General Permit Number TXR150000 for discharges of storm water runoff from construction sites equal to or greater than five acres, including the larger common plan of development. The information on this notice is required in Part III.E.2. of the general permit. This notice shall be posted along with a copy of the signed Notice of Intent (NOI), as applicable. Additional information regarding the TCEQ storm water permit program may be found on the internet at: http://www.tceq.state.tx.us/nav/permits/sw_permits.html

Site-Specific TPDES Authorization Number:	
Operator Name:	
Contact Name and Phone Number:	
Project Description: *Physical address or description of the site's location, and estimated start date and projected end date, or date that disturbed soils will be stabilized.*	
Location of Storm Water Pollution Prevention Plan:	

Attachment 3

LARGE CONSTRUCTION SITE NOTICE

FOR THE
Texas Commission on Environmental Quality (TCEQ)
Storm Water Program

TPDES GENERAL PERMIT TXR150000

"SECONDARY OPERATOR" NOTICE

This notice applies to secondary operators of construction sites operating under Part II.E.3. of the TPDES General Permit Number TXR150000 for discharges of storm water runoff from construction sites equal to or greater than five acres, including the larger common plan of development. The information on this notice is required in Part III.E.2. of the general permit. Additional information regarding the TCEQ storm water permit program may be found on the internet at: http://www.tceq.state.tx.us/nav/permits/sw_permits.html

Site-Specific TPDES Authorization Number:	
Operator Name:	
Contact Name and Phone Number:	
Project Description: *Physical address or description of the site's location, and estimated start date and projected end date, or date that disturbed soils will be stabilized.*	
Location of Storm Water Pollution Prevention Plan (SWP3):	

For Large Construction Activities Authorized Under Part II.E.3. (Obtaining Authorization to Discharge) the following certification must be completed:

I _____ (Typed or Printed Name Person Completing This Certification) certify under penalty of law that I have read and understand the eligibility requirements for claiming an authorization under Part II.E.2. of TPDES General Permit TXR150000 and agree to comply with the terms of this permit. A storm water pollution prevention plan has been developed and will be implemented prior to construction, according to permit requirements. A copy of this signed notice is supplied to the operator of the MS4 if discharges enter an MS4. I am aware there are significant penalties for providing false information or for conducting unauthorized discharges, including the possibility of fine and imprisonment for knowing violations.

Signature and Title_____ Date _____

_____*Date Notice Removed*
____*MS4 operator notified per Part II.F.3.*

Appendix 4

SWPPP Design Sheets (6)

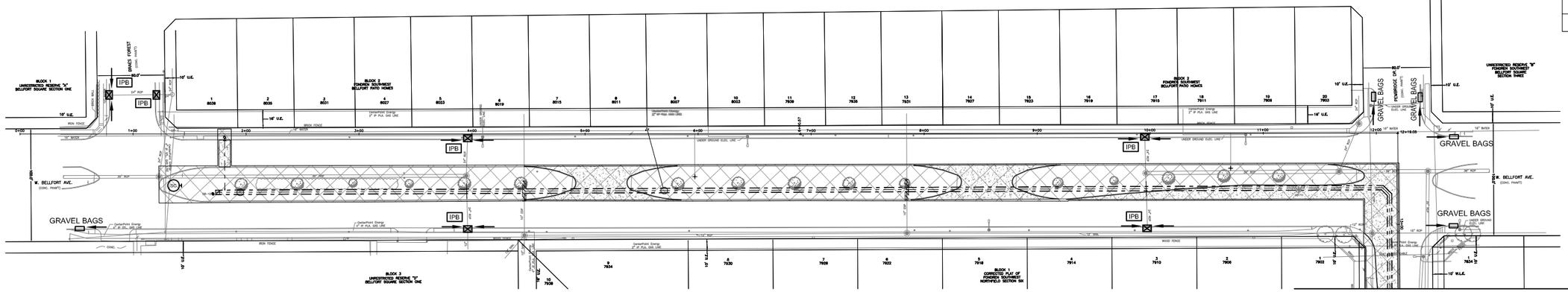

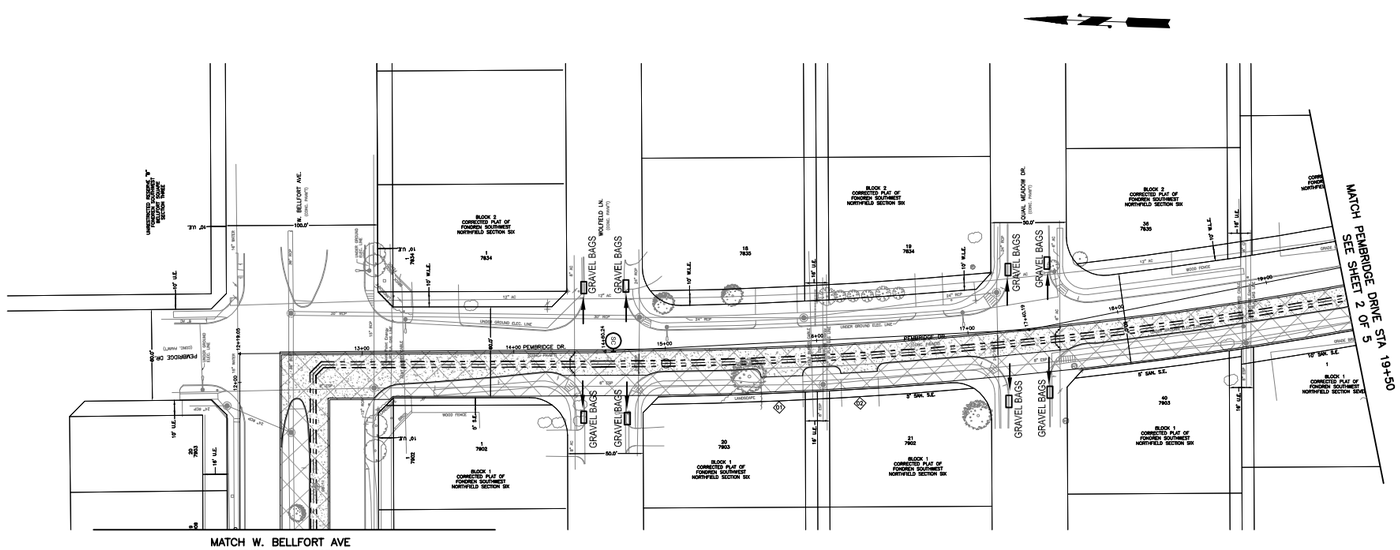

STATE OF TEXAS
BRIAN TAO
86401
REGISTERED
PROFESSIONAL ENGINEER

5/3/2012

SWTP
Surface Water Transmission Program

NOTES:

1. CONTRACTOR SHALL PROVIDE STABILIZED CONSTRUCTION ACCESSES AT BOTH ENDS OF EACH CONSTRUCTION SEGMENT.

2. CONTRACTOR SHALL PROVIDE STABILIZED STAGING/PARKING AREA.

3. MAINTENANCE AND INSPECTION OF EROSION/SEDIMENT CONTROL DEVICES SHALL BE PROVIDED PER SWPPP REPORT.

4. INLET PROTECTION BARRIER AND GRAVEL BAGS SHALL NOT IMPEDE TRAFFIC FLOW.

PROP LEGEND

- IPB — INLET PROTECTION BARRIER
- DSB — DEWATERING SETTLING BASIN
- FF — FILTER FABRIC FENCE
- RFB — REINFORCED FILTER FABRIC BARRIER
- SURFACE FLOW DIRECTION
- DISTURBED AREA
- SC — STABILIZED CONSTRUCTION ENTRANCE/EXIT
- GRAVEL BAGS
- PAVEMENT REPLACEMENT AREA
- S. F. DAM — STONE FILTER DAM

Lockwood, Andrews & Newnam, Inc.
A LEO A DALY COMPANY
2925 Briarpark Drive
Houston, TX 77042

TTL CORP
CIVIL ENGINEERING & GIS
P.O. BOX 1537, CYPRESS, TX 77410-1537
TEL: 713-501-6993 FAX: 281-213-9535
(TBPE RN: F-7725)

CITY OF HOUSTON
DEPARTMENT OF PUBLIC WORKS AND ENGINEERING

42-INCH WATER LINE ALONG SANDPIPER DRIVE, LUDINGTON DRIVE, PEMBRIDGE DRIVE AND WEST BELLFORT FROM WEST AIRPORT TO BRAES FOREST DRIVE

STORM WATER POLLUTION PREVENTION PLAN
SHEET 1 OF 5

WBS NO.	S-000900-0111-4 (CONTRACT 74B)
DRAWING SCALE	1"=100'
CITY OF HOUSTON PM	ARTHUR C. MORRIS, P.E.
SHEET NO.	1 OF 6

No.	Date	Revisions	App.

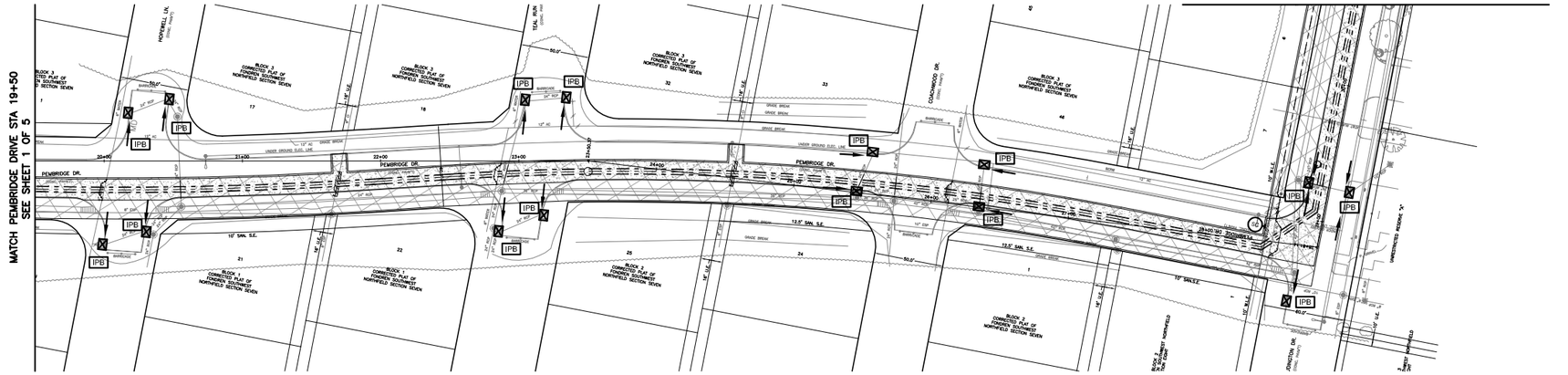

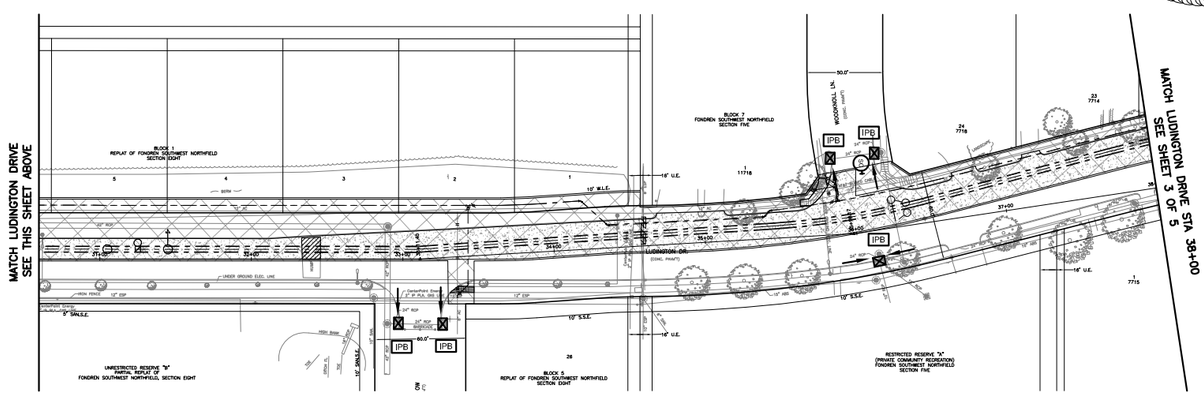

NOTES:

1. CONTRACTOR SHALL PROVIDE STABILIZED CONSTRUCTION ACCESSES AT BOTH ENDS OF EACH CONSTRUCTION SEGMENT.
2. CONTRACTOR SHALL PROVIDE STABILIZED STAGING/PARKING AREA.
3. MAINTENANCE AND INSPECTION OF EROSION/SEDIMENT CONTROL DEVICES SHALL BE PROVIDED PER SWPPP REPORT.
4. INLET PROTECTION BARRIER AND GRAVEL BAGS SHALL NOT IMPEDE TRAFFIC FLOW.

PROP LEGEND

- IPB — INLET PROTECTION BARRIER
- DSB — DEWATERING SETTLING BASIN
- FF — FILTER FABRIC FENCE
- RFB — REINFORCED FILTER FABRIC BARRIER
- SURFACE FLOW DIRECTION
- DISTURBED AREA
- SC — STABILIZED CONSTRUCTION ENTRANCE/EXIT
- GRAVEL BAGS
- PAVEMENT REPLACEMENT AREA
- S. F. DAM — STONE FILTER DAM

STATE OF TEXAS
BRIAN TAO
86401
REGISTERED
PROFESSIONAL ENGINEER

10/19/2012

SWTP
Surface Water Transmission Program

Lockwood, Andrews & Newnam, Inc.
A LEO A DALY COMPANY
2925 Briarpark Drive
Houston, TX 77042

TTL CORP
CIVIL ENGINEERING & GIS
P.O. BOX 1537, CYPRESS, TX 77410-1537
TEL: 713-501-6993 FAX: 281-213-9535
(TBPE RN: F-7725)

CITY OF HOUSTON
DEPARTMENT OF PUBLIC WORKS AND ENGINEERING

42-INCH WATER LINE ALONG SANDPIPER DRIVE, LUDINGTON DRIVE, PEMBRIDGE DRIVE AND WEST BELLFORT FROM WEST AIRPORT TO BRAES FOREST DRIVE

STORM WATER POLLUTION PREVENTION PLAN
SHEET 2 OF 5

WBS NO. S-000900-0111-4 (CONTRACT 74B)	
DRAWING SCALE	
1"=100'	
CITY OF HOUSTON PM	
ARTHUR C. MORRIS, P.E.	
SHEET NO. 2 OF 6	

No.	Date	Revisions	App.

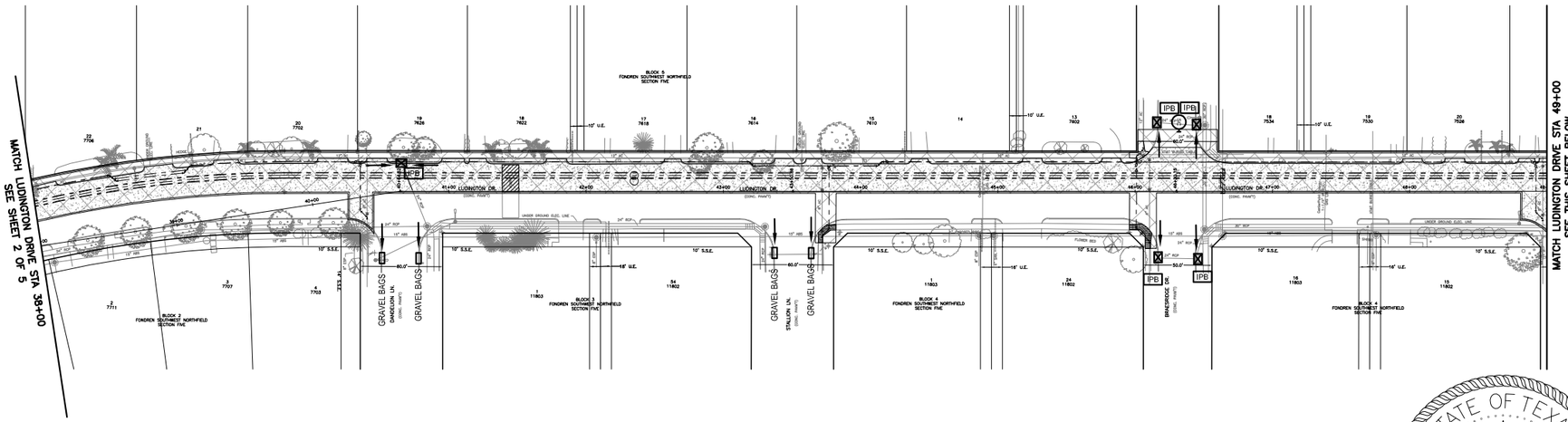

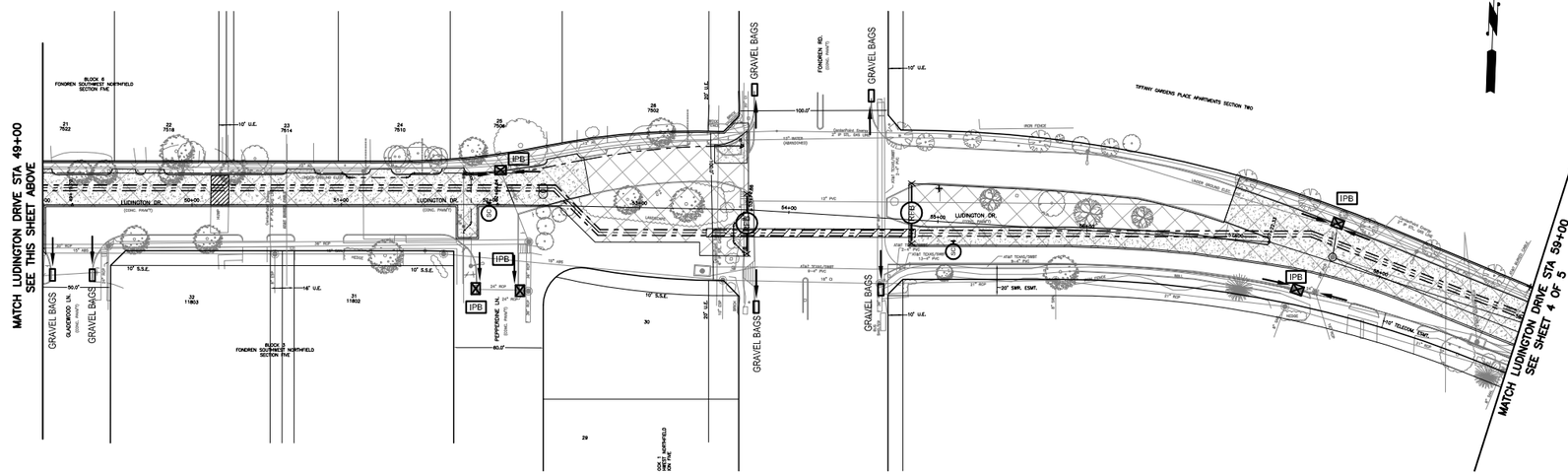

No.	Date	Revisions	App.

NOTES:

1. CONTRACTOR SHALL PROVIDE STABILIZED CONSTRUCTION ACCESSES AT BOTH ENDS OF EACH CONSTRUCTION SEGMENT.
2. CONTRACTOR SHALL PROVIDE STABILIZED STAGING/PARKING AREA.
3. MAINTENANCE AND INSPECTION OF EROSION/SEDIMENT CONTROL DEVICES SHALL BE PROVIDED PER SWPPP REPORT.
4. INLET PROTECTION BARRIER AND GRAVEL BAGS SHALL NOT IMPEDE TRAFFIC FLOW.

PROP LEGEND

- IPB — INLET PROTECTION BARRIER
- DSB — DEWATERING SETTLING BASIN
- FF — FILTER FABRIC FENCE
- RFB — REINFORCED FILTER FABRIC BARRIER
- SURFACE FLOW DIRECTION
- DISTURBED AREA
- SC — STABILIZED CONSTRUCTION ENTRANCE/EXIT
- GRAVEL BAGS
- PAVEMENT REPLACEMENT AREA
- S. F. DAM — STONE FILTER DAM

STATE OF TEXAS
BRIAN TAO
86401
REGISTERED PROFESSIONAL ENGINEER

5/3/2012

SWTP
Surface Water Transmission Program

Lockwood, Andrews & Newnam, Inc.
A LEO A DALY COMPANY
2925 Briarpark Drive
Houston, TX 77042

TTL CORP
CIVIL ENGINEERING & GIS
P.O. BOX 1537, CYPRESS, TX 77410-1537
TEL: 713-501-6993 FAX: 281-213-9535
(TBPE RN F-7725)

CITY OF HOUSTON
DEPARTMENT OF PUBLIC WORKS AND ENGINEERING

42-INCH WATER LINE ALONG SANDPIPER DRIVE, LUDINGTON DRIVE, PEMBRIDGE DRIVE AND WEST BELLFORT FROM WEST AIRPORT TO BRAES FOREST DRIVE

STORM WATER POLLUTION PREVENTION PLAN
SHEET 3 OF 5

WBS NO. S-000900-0111-4 (CONTRACT 74B)	
DRAWING SCALE	
1"=100'	
CITY OF HOUSTON PM	
ARTHUR C. MORRIS, P.E.	
SHEET NO. 3 OF 6	

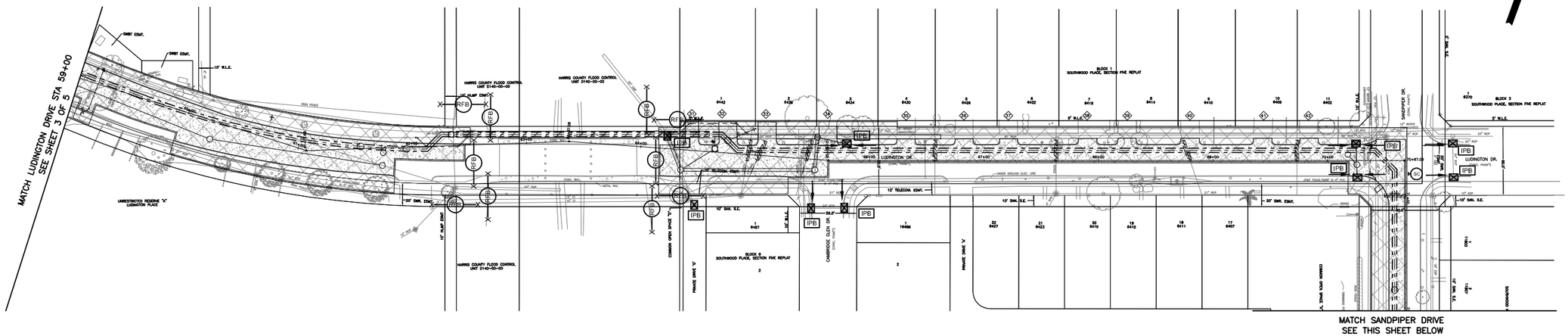

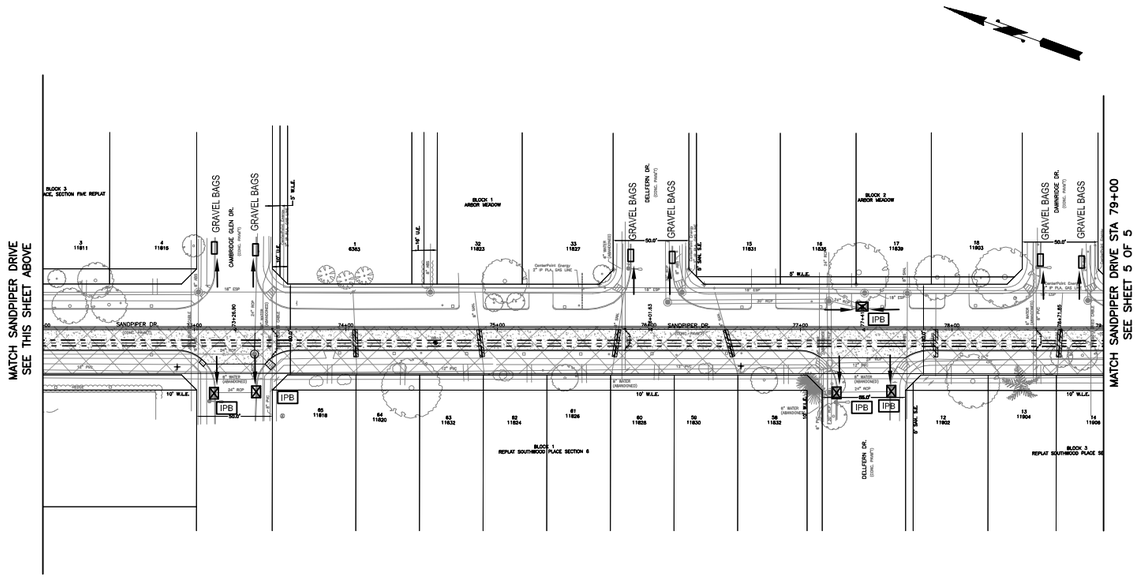

STATE OF TEXAS
BRIAN TAO
86401
REGISTERED
PROFESSIONAL ENGINEER

5/3/2012

SWTP
Surface Water Transmission Program

NOTES:

1. CONTRACTOR SHALL PROVIDE STABILIZED CONSTRUCTION ACCESSES AT BOTH ENDS OF EACH CONSTRUCTION SEGMENT.
2. CONTRACTOR SHALL PROVIDE STABILIZED STAGING/PARKING AREA.
3. MAINTENANCE AND INSPECTION OF EROSION/SEDIMENT CONTROL DEVICES SHALL BE PROVIDED PER SWPPP REPORT.
4. INLET PROTECTION BARRIER AND GRAVEL BAGS SHALL NOT IMPEDE TRAFFIC FLOW.

PROP LEGEND

- IPB — INLET PROTECTION BARRIER
- DSB — DEWATERING SETTLING BASIN
- FF — FILTER FABRIC FENCE
- RFB — REINFORCED FILTER FABRIC BARRIER
- SURFACE FLOW DIRECTION
- DISTURBED AREA
- SC — STABILIZED CONSTRUCTION ENTRANCE/EXIT
- GRAVEL BAGS
- PAVEMENT REPLACEMENT AREA
- S. F. DAM — STONE FILTER DAM

LAN
Lockwood, Andrews & Newnam, Inc.
A LEO A DALY COMPANY
2925 Briarpark Drive
Houston, TX 77042

TTL CORP
CIVIL ENGINEERING & GIS
P.O. BOX 1537, CYPRESS, TX 77410-1537
TEL: 713-501-6993 FAX: 281-213-9535
(TBPE RN: F-7725)

CITY OF HOUSTON
DEPARTMENT OF PUBLIC WORKS AND ENGINEERING

42-INCH WATER LINE ALONG SANDPIPER DRIVE, LUDINGTON DRIVE, PEMBRIDGE DRIVE AND WEST BELLFORT FROM WEST AIRPORT TO BRAES FOREST DRIVE

STORM WATER POLLUTION PREVENTION PLAN
SHEET 4 OF 5

WBS NO. S-000900-0111-4 (CONTRACT 74B)	
DRAWING SCALE	
1"=100'	
CITY OF HOUSTON PM	
ARTHUR C. MORRIS, P.E.	
SHEET NO. 4 OF 6	

No.	Date	Revisions	App.

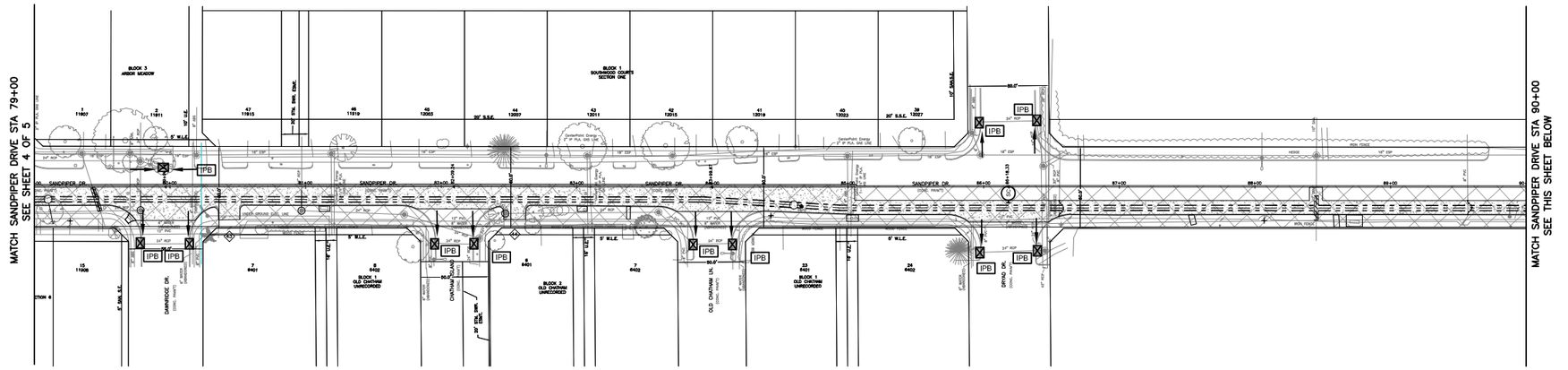

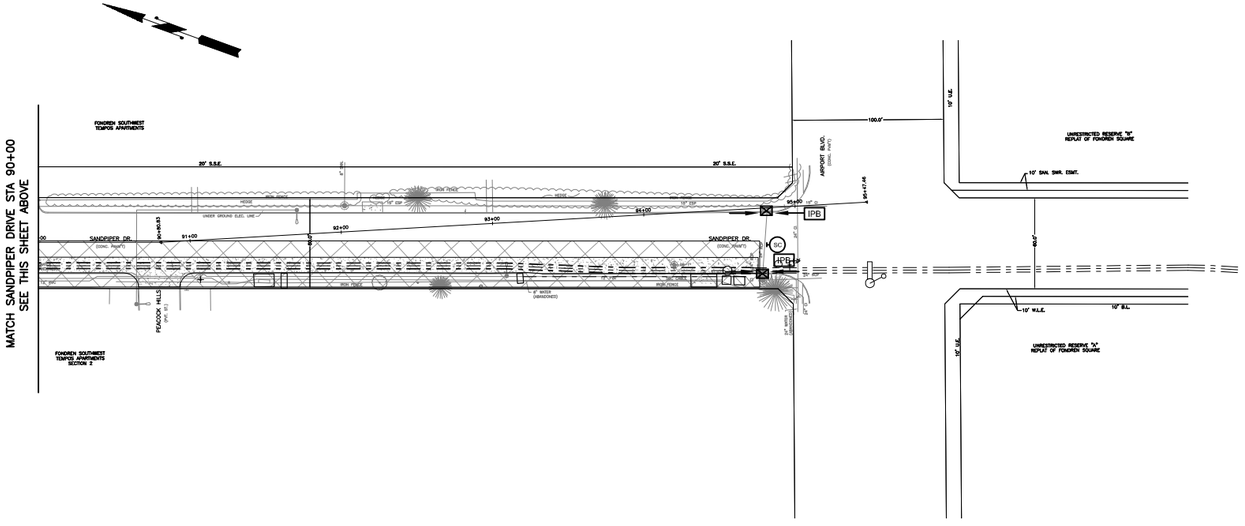

STATE OF TEXAS
BRIAN TAO
86401
REGISTERED
PROFESSIONAL ENGINEER

5/3/2012

SWTP
Surface Water Transmission Program

NOTES:

1. CONTRACTOR SHALL PROVIDE STABILIZED CONSTRUCTION ACCESSES AT BOTH ENDS OF EACH CONSTRUCTION SEGMENT.

2. CONTRACTOR SHALL PROVIDE STABILIZED STAGING/PARKING AREA.

3. MAINTENANCE AND INSPECTION OF EROSION/SEDIMENT CONTROL DEVICES SHALL BE PROVIDED PER SWPPP REPORT.

4. INLET PROTECTION BARRIER AND GRAVEL BAGS SHALL NOT IMPEDE TRAFFIC FLOW.

PROP LEGEND

- IPB — INLET PROTECTION BARRIER
- DSB — DEWATERING SETTLING BASIN
- FF — FILTER FABRIC FENCE
- RFB — REINFORCED FILTER FABRIC BARRIER
- SURFACE FLOW DIRECTION
- DISTURBED AREA
- SC — STABILIZED CONSTRUCTION ENTRANCE/EXIT
- GRAVEL BAGS
- PAVEMENT REPLACEMENT AREA
- S. F. DAM — STONE FILTER DAM

LAN
Lockwood, Andrews & Newnam, Inc.
A LEO A DALY COMPANY
2925 Briarpark Drive
Houston, TX 77042

TTL CORP
CIVIL ENGINEERING & GIS
P.O. BOX 1537, CYPRESS, TX 77410-1537
TEL: 713-501-6993 FAX: 281-213-9535
(TBPE RN: F-7725)

CITY OF HOUSTON
DEPARTMENT OF PUBLIC WORKS AND ENGINEERING

42-INCH WATER LINE ALONG SANDPIPER DRIVE, LUDINGTON DRIVE, PEMBRIDGE DRIVE AND WEST BELLFORT FROM WEST AIRPORT TO BRAES FOREST DRIVE

STORM WATER POLLUTION PREVENTION PLAN
SHEET 5 OF 5

WBS NO. S-000900-0111-4 (CONTRACT 74B)	
DRAWING SCALE	
1"=100'	
CITY OF HOUSTON PM	
ARTHUR C. MORRIS, P.E.	
SHEET NO. 5 OF 6	

No.	Date	Revisions	App.

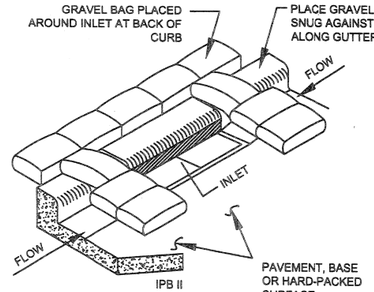

GENERAL NOTES:

1. PLACE GRAVEL BAGS IN THE GUTTER ON EACH SIDE OF THE INLET OPENING.
2. GRAVEL BAGS SHALL BE PLACED TIGHTLY AGAINST THE CURB.
3. PLACE GRAVEL BAGS AT BACK OF CURB ALONG INLET.
4. GRAVEL BAGS SHALL NOT BLOCK THROAT INLET, UNLESS DIRECTED BY ENGINEER.
5. IF THE LINE ADJACENT TO THE INLET IS CLOSED TO TRAFFIC THEN ADDITIONAL GRAVEL BAGS SHALL BE PLACED CONTINUCUSLY ACROSS THE FRONT OF THE INLET, BUT SHALL NOT BLOCK THE THROAT OF THE INLET.

GRAVEL BAG INLET PROTECTION BARRIER
(FOR STAGE II INLETS)

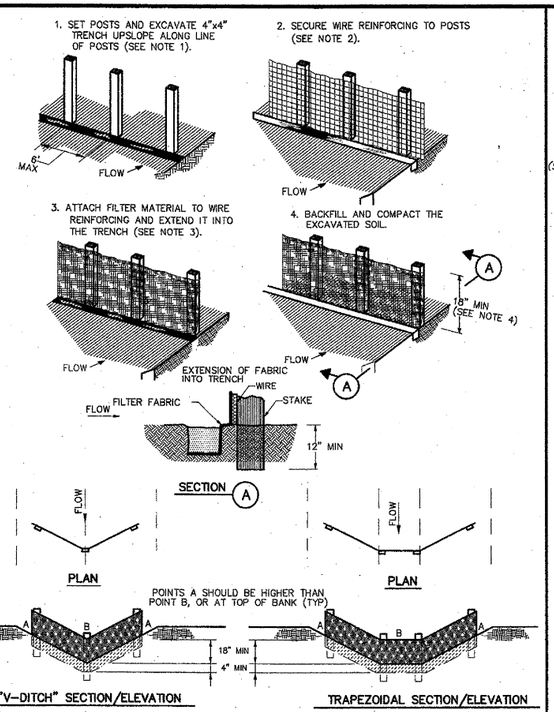

CONSTRUCTION NOTES:

1. SET 2 INCH BY 2 INCH WOODEN STAKES SPACED A MAX OF 6 FEET APART AND EMBEDDED A MIN OF 12 INCHES.
2. WOVEN WIRE REINFORCING TO BE FASTENED SECURELY TO BARRIER POSTS WITH STAPLES.
3. FILTER CLOTH TO BE FASTENED SECURELY TO WOVEN WIRE REINFORCING, WITH TIES SPACED EVERY 24 INCHES AT TOP AND MIDSECTION.
4. MINIMUM HEIGHT OF FILTER SHOULD BE 18 INCHES AND A MAXIMUM OF 36 INCHES ABOVE NATURAL GROUND.
5. WHEN TWO SECTIONS OF FILTER CLOTH ADJOIN EACH OTHER THEY SHALL BE OVERLAPPED 6 INCHES AT THE POSTS, AND FOLDED.
6. SEE COH STANDARD SPECIFICATION FOR FILTER FABRIC BARRIER.

SYMBOL

REINFORCED FILTER FABRIC BARRIER

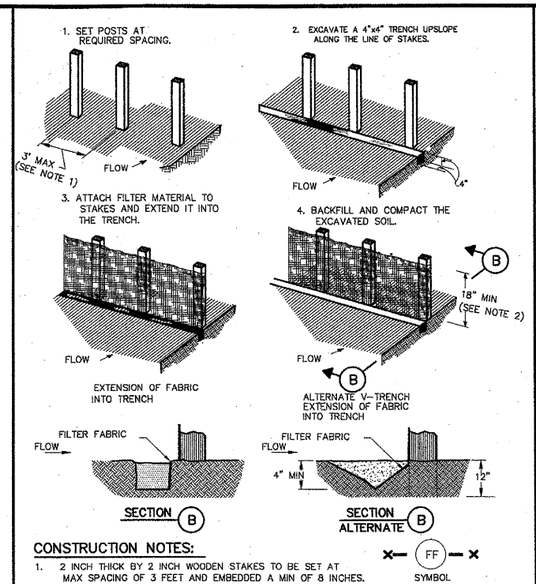

CONSTRUCTION NOTES:

1. 2 INCH THICK BY 2 INCH WOODEN STAKES TO BE SET AT MAX SPACING OF 3 FEET AND EMBEDDED A MIN OF 8 INCHES. IF PREASSEMBLED BARRIER WITH SUPPORT NETTING IS USED, SPACING OF POST MAY BE INCREASED TO 8 FEET MAX.
2. ATTACH FILTER FABRIC TO WOODEN STAKES. FILTER FABRIC BARRIER SHALL HAVE A MIN HEIGHT OF 18 INCHES AND MAX HEIGHT OF 36 INCHES ABOVE NATURAL GROUND.
3. WHEN TWO SECTIONS OF FILTER CLOTH ADJOIN EACH OTHER THEY SHOULD BE OVERLAPPED 6 INCHES AT THE POSTS, AND FOLDED.
4. SEE COH STANDARD SPECIFICATION FOR FILTER FABRIC BARRIER.

FILTER FABRIC BARRIER

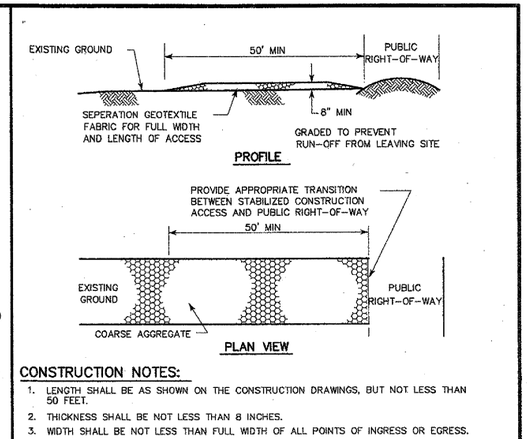

CONSTRUCTION NOTES:

1. LENGTH SHALL BE AS SHOWN ON THE CONSTRUCTION DRAWINGS, BUT NOT LESS THAN 50 FEET.
2. THICKNESS SHALL BE NOT LESS THAN 8 INCHES.
3. WIDTH SHALL BE NOT LESS THAN FULL WIDTH OF ALL POINTS OF INGRESS OR EGRESS.
4. STABILIZATION FOR OTHER AREAS SHALL HAVE THE SAME AGGREGATE THICKNESS AND WIDTH REQUIREMENTS AS THE STABILIZED CONSTRUCTION ACCESS, UNLESS OTHERWISE SHOWN ON THE CONSTRUCTION DRAWINGS.
5. STABILIZED AREA MAY BE WIDENED OR LENGTHENED TO ACCOMODATE A WASHING AREA. AN OUTLET SEDIMENT TRAP MUST BE PROVIDED FOR THE WASHING AREA.
6. COH STANDARD SPECIFICATION FOR STABILIZED CONSTRUCTION ACCESS.
7. STABILIZED CONSTRUCTION ACCESS SHALL BE MAINTAINED FREE OF SEDIMENT FOR THE DURATION OF THE PROJECT.

SC
SYMBOL

STABILIZED CONSTRUCTION ACCESS

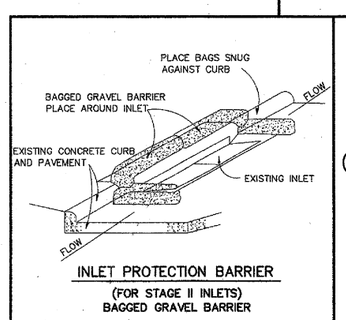

INLET PROTECTION BARRIER
(FOR STAGE II INLETS)
BAGGED GRAVEL BARRIER

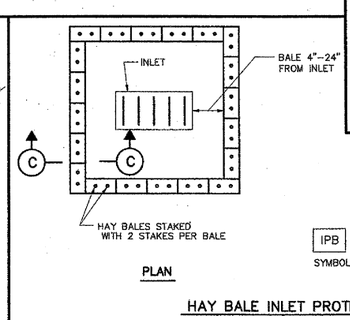

HAY BALE INLET PROTECTION BARRIER

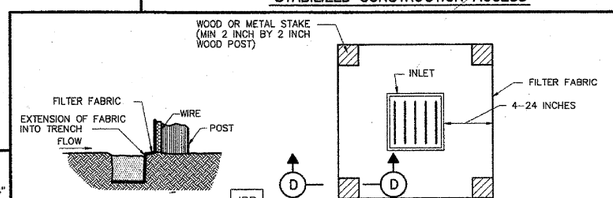

SILT FENCE INLET PROTECTION BARRIER

CONSTRUCTION NOTE:

1. SEE CONSTRUCTION NOTES FOR RFB.

CITY OF HOUSTON
DEPARTMENT OF PUBLIC WORKS AND ENGINEERING

STORM WATER POLLUTION PREVENTION PLAN DETAILS
(NOT TO SCALE)

APPROVED: CITY ENGINEER
APPROVED: DIRECTOR OF PUBLIC WORKS AND ENGINEERING
EFF DATE: JULY-01-2010
DWG NO: 01571-01

STATE OF TEXAS
BRIAN TAO
86401
REGISTERED
PROFESSIONAL ENGINEER
5/3/2012

SWTP
Surface Water Transmission Program

Lockwood, Andrews & Newnam, Inc.
A LEO A DALY COMPANY
2925 Briarpark Drive
Houston, TX 77042

TTL CORP
CIVIL ENGINEERING & GIS
P.O. BOX 1537, CYPRESS, TX 77410-1537
TEL: 713-501-6993 FAX: 281-213-9535
(TBPE RN: F-7725)

CITY OF HOUSTON
DEPARTMENT OF PUBLIC WORKS AND ENGINEERING

42-INCH WATER LINE ALONG SANDPIPER DRIVE, LUDINGTON DRIVE, PEMBRIDGE DRIVE AND WEST BELLFORT FROM WEST AIRPORT TO BRAES FOREST DRIVE

STORM WATER POLLUTION PREVENTION PLAN
STANDARD DETAILS

WBS NO. S-000900-0111-4 (CONTRACT 74B)	
DRAWING SCALE	
NO SCALE	
CITY OF HOUSTON PM	
ARTHUR C. MORRIS, P.E.	
SHEET NO. 6 OF 6	

No.	Date	Revisions	App.