CITY OF HOUSTON

DEPARTMENT OF PUBLIC WORKS AND ENGINEERING
ENGINEERING AND CONSTRUCTION DIVISION

PROPOSED 48-INCH/42-INCH WATER LINE ALONG EXISTING EASEMENTS, WEST OREM, CHIMNEY ROCK, RIVER BLUFF, SUMMIT RIDGE, WOOD RIVER AND COACHCREEK FROM SIMS BAYOU PUMP STATION (SIMS) TO HILLCROFT AND SWPS CHLORINE BUILDING IMPROVEMENTS

WBS NO. S-000900-0109-4

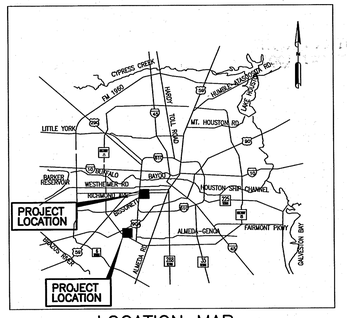

LOCATION MAP
COUNCIL DISTRICT D

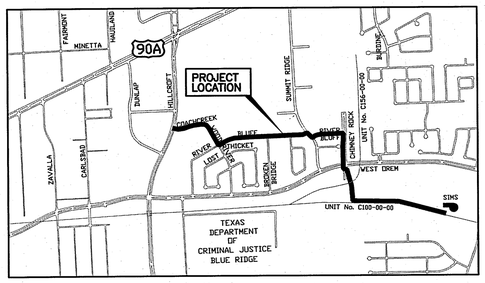

VICINITY MAPS
KEY MAP 571 J, K & P
GIMS 5151 A & 5152 C

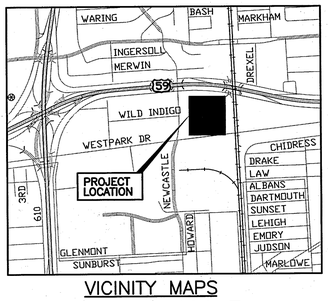

VICINITY MAPS
KEY MAP 491 Z
GIMS 5256 C

MAYOR
ANNISE D. PARKER

CONTROLLER
RONALD C. GREEN

DISTRICT COUNCIL MEMBERS

BRENDA STARDIG DISTRICT A	JARVIS JOHNSON DISTRICT B	ANNE CLUTTERBUCK DISTRICT C
WANDA ADAMS DISTRICT D	MIKE SULLIVAN DISTRICT E	AL HOANG DISTRICT F
OLIVER PENNINGTON DISTRICT G	EDWARD GONZALEZ DISTRICT H	JAMES G. RODRIGUEZ DISTRICT I

COUNCIL MEMBERS AT-LARGE

STEPHEN C. COSTELLO POSITION 1	SUE LOVELL POSITION 2
MELISSA NORIEGA POSITION 3	C.O. "BRAD" BRADFORD POSITION 4
JOLANDA "JO" JONES POSITION 5	

NOTIFY CITY OF HOUSTON 48 HOURS BEFORE STARTING CONSTRUCTION

Lockwood, Andrews & Newnam, Inc.
A LEO A DALY COMPANY

SURVEYED BY: KUO & ASSOCIATES
FB NO. P- 5554

1/20/11
STATE OF TEXAS
ALISA GRUBER
95685
LICENSED PROFESSIONAL ENGINEER
Lockwood, Andrews & Newnam, Inc.
Firm No. 2614

Arthur C. Morris 3/3/2011
WATER

Glen McDonald
WASTEWATER

Ezzat B. Fouli 4/14/2011
STORM WATER

Michelle Rawdon 4/19/11
STREET & BRIDGE

Larry D. Sleezy 5/10/11
CONSTRUCTION C.J. Survey 4-14-11

W. Horvath 4/13/2011
TRAFFIC AND TRANSPORTATION

NA
SIGNALS

6/15/11
ASSISTANT DIRECTOR

4-12-11
PARK-FORESTRY DEPT

4/13/11
DRINKING WATER OPERATIONS

6-24-11
CITY ENGINEER DATE

7/5/11
DIRECTOR OF PUBLIC WORKS AND ENGINEERING DATE

PUBLIC WORKS AND ENGINEERING
ACCEPTED AND FILED
48326
CITY DRAWING NUMBER
HOUSTON, TEXAS

SHEET NO 1 OF 91

SHEET NO.	DESCRIPTION
1.	COVER SHEET AND VICINITY MAP
2.	INDEX AND LEGEND
3.	GENERAL AND CONSTRUCTION NOTES
4.	SHEET LAYOUT (SHEET 1 OF 2)
5.	SHEET LAYOUT (SHEET 2 OF 2)
6.	SURVEY CONTROL MAP
7.	CONTROL MONUMENTS
8.	FLOODPLAIN MITIGATION PLAN 1 OF 2
9.	FLOODPLAIN MITIGATION PLAN 2 OF 2
10.	PLAN & PROFILE – WATER LINE – STA 1+16.42 TO STA 5+00
11.	PLAN & PROFILE – WATER LINE – STA 5+00 TO STA 8+30.77
12.	PLAN & PROFILE – WATER LINE – STA 8+30.77 TO STA 12+00
13.	PLAN & PROFILE – WATER LINE – STA 12+00 TO STA 13+25.73
14.	PLAN & PROFILE – WATER LINE – STA 13+25.73 TO STA 17+00
15.	PLAN & PROFILE – WATER LINE – STA 17+00 TO STA 22+00
16.	PLAN & PROFILE – WATER LINE – STA 22+00 TO STA 26+00
17.	PLAN & PROFILE – WATER LINE – STA 26+00 TO STA 30+00
18.	PLAN & PROFILE – WATER LINE – STA 30+00 TO STA 32+08.45
19.	PLAN & PROFILE – WATER LINE – STA 32+08.45 TO STA 33+52.60
20.	PLAN & PROFILE – WATER LINE – STA 33+52.60 TO STA 38+00
21.	PLAN & PROFILE – WATER LINE – STA 38+00 TO STA 40+51.65
22.	PLAN & PROFILE – WATER LINE – STA 40+51.65 TO STA 44+00
23.	PLAN & PROFILE – WATER LINE – STA 44+00 TO STA 47+20.99
24.	PLAN – WATER LINE – STA 47+20.99 TO STA 49+26.78
25.	PROFILE – WATER LINE – STA 47+20.99 TO STA 49+26.78
26.	PLAN – WATER LINE – STA 49+26.78 TO STA 52+50
27.	PROFILE – WATER LINE – STA 49+26.78 TO STA 52+50
28.	PLAN – WATER LINE – STA 52+50 TO STA 56+28.86
29.	PROFILE – WATER LINE – STA 52+50 TO STA 56+28.86
30.	PLAN & PROFILE – WATER LINE – STA 56+28.86 TO STA 61+00
31.	PLAN & PROFILE – WATER LINE – STA 61+00 TO STA 66+00
32.	PLAN & PROFILE – WATER LINE – STA 66+00 TO STA 71+00
33.	PLAN – WATER LINE – STA 71+00 TO STA 75+49.29
34.	PROFILE – WATER LINE – STA 71+00 TO STA 75+49.29
35.	SIMS PS OVERALL SITE LAYOUT PROPOSED IMPROVEMENTS
36.	SIMS PS DRAINAGE
37.	SIMS PS CONNECTION STRUCTURAL DETAILS
38.	SIMS PS CONNECTION MECHANICAL DETAILS
39.	GRADING – STA 49+26.78 TO STA 56+28.86
40.	GRADING – STA 56+28.86 TO 66+00.00
41.	GRADING – STA 66+00.00 TO 75+49.29
41A	SWPS CHLORINE BUILDING – EXISTING PLAN, ELEVATIONS AND DETAILS
41B	SWPS CHLORINE BUILDING – NEW PLANS AND ELEVATIONS
41C	SWPS CHLORINE BUILDING – REFLECTED CEILING PLAN
41D	SWPS CHLORINE BUILDING – SCRUBBER WING SECTION 1 OF 2
41E	SWPS CHLORINE BUILDING – SCRUBBER WING SECTION 2 OF 2
41F	SWPS CHLORINE BUILDING – TYPICAL ROOF DETAILS
41G	SWPS CHLORINE BUILDING – SOFFIT GUTTER AND ROOF DETAILS
41H	SWPS CHLORINE BUILDING – ROOF PENETRATION DETAILS 1 OF 2
41I	SWPS CHLORINE BUILDING – ROOF PENETRATION DETAILS 2 OF 2
41J	SWPS CHLORINE BUILDING – FRAMING PLANS AND DETAILS
41K	SWPS CHLORINE BUILDING – ROOF SHEETING AND SOFFIT LAY-OUT
41L	SWPS CHLORINE BUILDING – MASONRY WALL DETAILS
41M	SWPS CHLORINE BUILDING – ELECTRICAL SYMBOL LEGEND AND DEMOLITION PLAN – ELECTRICAL
41N	SWPS CHLORINE BUILDING – OVERALL PLAN – ELECTRICAL
41O	SWPS CHLORINE BUILDING – POWER AND LIGHT PLAN
41P	SWPS CHLORINE BUILDING – OVERALL PLAN – MECHANICAL
41Q	SWPS CHLORINE BUILDING – ROOF PLAN – MECHANICAL
41R	SWPS CHLORINE BUILDING – NEW FLOOR PLAN – PLUMBING
42.	PRESTRESSED CONCRETE CYLINDER PIPE DETAILS
43.	STEEL PIPE DETAILS
44.	VALVE AND SERVICE MANHOLE DETAILS
45.	AIR VALVE AND MANHOLE DETAILS
46.	MISCELLANEOUS WATER LINE DETAILS
47.	STANDARD EXTRA DEPTH MANHOLE DETAIL
48.	TUNNEL AND CASING DETAILS AND PIPE SUPPORT DETAIL
49.	SMALL DIAMETER WATER LINE DETAILS
50.	EXCAVATION, BEDDING, BACKFILL & PAVEMENT REPAIR DETAILS
51.	CATHODIC PROTECTION DETAILS FOR JOINT BONDING (SHEET 1 OF 2)
52.	CATHODIC PROTECTION DETAILS FOR JOINT BONDING (SHEET 2 OF 2)
53.	CATHODIC PROTECTION DETAILS FOR TEST STATIONS
54.	CATHODIC PROTECTION DETAILS FOR TEST STATIONS AND ANODES (SHEET 1 OF 2)
55.	CATHODIC PROTECTION DETAILS FOR TEST STATIONS AND ANODES (SHEET 2 OF 2)
56.	CATHODIC PROTECTION RECTIFIER AND DEEP ANODE GROUND BED
57.	STANDARD SANITARY OR STORM SEWER CONSTRUCTION DETAILS
58.	SANITARY SEWER PRECAST CONCRETE MANHOLE
59.	STANDARD DRAINAGE DETAILS SHEET 1 OF 2
60.	STANDARD DRAINAGE DETAILS SHEET 2 OF 2
61.	STORM SEWER TYPE "BB" INLET DETAILS
62.	TYPE C-1, C-2 AND C-2A INLETS
63.	TYPE "A" GRATE INLETS DETAILS
64.	MISCELLANEOUS STORM DETAILS
65.	DRIVEWAY AND DITCH DETAILS
66.	PAVEMENT AND DRIVEWAY SCHEDULE
67.	PAVEMENT DETAILS SHEET 1 OF 3
68.	PAVEMENT DETAILS SHEET 2 OF 3
69.	PAVEMENT DETAILS SHEET 3 OF 3
70.	PAVEMENT REPAIR DETAILS
71.	STREET CUT DETAILS
72.	STANDARD PAVEMENT MARKING
73.	SIDEWALK AND WHEELCHAIR RAMP DETAILS 1 OF 2
74.	SIDEWALK AND WHEELCHAIR RAMP DETAILS 2 OF 2
75.	CONCRETE SIDEWALK DETAIL FOR STREETS WITH CURB AND 12' CRUSHED LIMESTONE ACCESS ROAD
76.	TRAFFIC CONTROL PLAN GENERAL NOTES
77.	TRAFFIC CONTROL PLAN OVERALL LAYOUT AND CONSTRUCTION SEQUENCING SHEET 1 OF 3
78.	TRAFFIC CONTROL PLAN OVERALL LAYOUT AND CONSTRUCTION SEQUENCING SHEET 2 OF 3
79.	TRAFFIC CONTROL PLAN OVERALL LAYOUT AND CONSTRUCTION SEQUENCING SHEET 3 OF 3
80.	TRAFFIC CONTROL PLAN DETOUR PLAN PHASE 1
81.	TRAFFIC CONTROL PLAN DETOUR PLAN PHASE 1 STEP A
82.	TRAFFIC CONTROL PLAN DETOUR PLAN PHASE 1 STEP B
83.	TRAFFIC CONTROL PLAN DETOUR PLAN PHASE 2 STEP A1
84.	TRAFFIC CONTROL PLAN DETOUR PLAN PHASE 2 STEP A2
85.	TRAFFIC CONTROL PLAN DETOUR PLAN PHASE 2 STEP B SHEET 1 OF 2
86.	TRAFFIC CONTROL PLAN DETOUR PLAN PHASE 2 STEP B SHEET 2 OF 2
87.	TREE PROTECTION PLAN SHEET 1 OF 5
88.	TREE PROTECTION PLAN SHEET 2 OF 5
89.	TREE PROTECTION PLAN SHEET 3 OF 5
90.	TREE PROTECTION PLAN SHEET 4 OF 5
91.	TREE PROTECTION PLAN SHEET 5 OF 5

THIS PROJECT CONTAINS A TOTAL OF 109 DRAWINGS

LEGEND

EXISTING PLAN LEGEND

- SHRUB OR BUSH
- TREE
- SAN MANHOLE, STORM MANHOLE
- SBC MANHOLE
- CLEANOUT
- GAS METER
- GAS VALVE
- FIRE HYDRANT
- WATER METER
- WATER VALVE
- POWER POLE, TELEPHONE & ELEC. POLE
- DOWN GUY
- STORM INLETS; B, BB, C, C-1, AND C-2A
- STORM INLET, GRATE
- TRAFFIC, SIGNAL, SIGNAL POLE
- IRON ROD/POLE
- WOOD POST, BRICK COLUMN, BRICK PILLAR
- TRAFFIC, METRO, BUSINESS, STOP SIGNS
- SBC PEDESTAL, HISTORICAL MARKER
- C.O.H. SURVEY MARKER, MONUMENT MARKER
- SOIL BORING LOCATION
- SOIL BORING & PIEZOMETER LOCATION
- MAILBOX
- METAL POST
- LIGHT STANDARD
- ELECTRICAL BOX
- HEDGE
- CURB LINE
- ROW LINE
- LOT LINES
- EASEMENT LINE
- EDGE OF ASPHALT
- CULVERT PIPE
- BASELINE
- CHAIN LINK, WOOD FENCE, HOG WIRE
- BARBED WIRE
- GAS LINE OR PIPELINE
- SBC LINE
- CENTERPOINT ENERGY ELECTRICAL CONDUIT
- CENTERPOINT ENERGY OVERHEAD ELECTRICAL LINES
- EDGE OF DITCH
- CENTER LINE OF DITCH
- SAN SEWER LINE 24" DIA. & SMALLER
- SAN SEWER LINE 30" DIA. & LARGER
- STM SEWER LINE 24" DIA. & SMALLER
- STM SEWER LINE 30" DIA & LARGER
- WATER LINE 24" DIA. & SMALLER
- WATER LINE 30" DIA & LARGER

EXISTING PROFILE LEGEND

- CENTER LINE OF RIGHT-OF-WAY
- R.O.W. LINE N & E
- R.O.W. S & W
- DITCH OR CURB LINE N & E
- DITCH OR CURB LINE S & W
- 24" AND SMALLER SAN SEWER LINE
- 30" AND LARGER SAN SEWER LINE
- 24" AND SMALLER STORM SEWER LINE
- 30" AND LARGER STORM SEWER LINE
- ALL WATER LINE
- SBC CONDUIT
- GAS LINE

(R) INFORMATION OBTAINED FROM RECORD DRAWINGS. NOT FIELD VERIFIED.

PROPOSED PLAN LEGEND

- T.S.V. & BOX
- BUTTERFLY VALVE
- GATE VALVE & BOX
- FIRE HYDRANT
- CUT AND PLUG
- STORM "BB" INLET
- ACCESS MANHOLE
- CATHODIC PROTECTION RECTIFIER AND DEEP ANODE
- AIR VENT W/ THREE BOLLARDS
- AIR VENT W/ ONE BOLLARD
- CATHODIC PROTECTION TEST STATION
- SAN SEWER LINE 24" DIA. & SMALLER
- SAN SEWER LINE 30" DIA. & LARGER
- SANITARY SEWER REPLACEMENT
- STM SEWER LINE 24" DIA. & SMALLER
- STM SEWER LINE 30" DIA & LARGER
- WATER LINE 24" DIA. & SMALLER
- WATER LINE 30" DIA & LARGER

PROPOSED PROFILE LEGEND

- TOP OF CURB
- CENTERLINE FOR OPEN DITCH PAVING
- 24" AND SMALLER SAN SEWER LINE
- 30" AND LARGER SAN SEWER LINE
- 24" AND SMALLER STORM SEWER LINE
- 30" AND LARGER STORM SEWER LINE
- WATER LINE 24" DIA. & SMALLER
- WATER LINE 24" DIA. & SMALLER RESTRAINED JOINT SECTION
- WATER LINE 24" DIA. & SMALLER ONE FULL SECTION RESTRAINED JOINTS CENTERED OVER/UNDER SAN SWR
- WATER LINE 30" DIA & LARGER
- WATER LINE 30" DIA & LARGER IN TUNNEL
- WATER LINE 30" DIA. & LARGER ONE FULL SECTION RESTRAINED JOINTS CENTERED OVER/UNDER SAN SWR

No.	Date	Revisions	App.

SWTP
Surface Water Transmission Program

Lockwood, Andrews & Newnam, Inc.
A LEO A DALY COMPANY
2925 Briarpark Drive Houston, TX 77042

STATE OF TEXAS
ALISA GRUBER
95685
LICENSED PROFESSIONAL ENGINEER
Lockwood, Andrews & Newnam, Inc. Firm No. 2614

SURVEYED BY:
KUO & ASSOCIATES, INC.
C.O.H. Field Book P-5554

CITY OF HOUSTON
DEPARTMENT OF PUBLIC WORKS AND ENGINEERING

SWTP CONTRACT 74A-1

INDEX AND LEGEND

WBS NO.	S-000900-0109-4
DRAWING SCALE	NOT TO SCALE
CITY OF HOUSTON PM	ARTHUR C. MORRIS, P.E.
SHEET NO.	2 OF 91

PUBLIC WORKS AND ENGINEERING
ACCEPTED AND FILED
48326
CITY DRAWING NUMBER
HOUSTON, TEXAS

6/20/2011 2:10:33 PM jmusku

L:\130-1037-004\4-0-Production\4-01-Drawings\General\02-1037-4-INDEX & LEGEND.dgn

CENTERPOINT ENERGY HOUSTON LIGHTING AND POWER

WARNING: OVERHEAD ELECTRICAL FACILITIES

1. OVERHEAD LINES MAY EXIST ON PROPERTY. THE LOCATION OF OVERHEAD LINES HAS NOT BEEN SHOWN ON THESE DRAWINGS AS THE LINES ARE CLEARLY VISIBLE, BUT YOU SHOULD LOCATE THEM PRIOR TO BEGINING ANY CONSTRUCTION. TEXAS LAW, SECTION 752, HEALTH & SAFETY CODE, FORBIDS ALL ACTIVITIES THAT OCCUR IN CLOSE PROXIMITY TO HIGH VOLTAGE LINES, SPECIFICALLY:
   * ANY ACTIVITY WHERE PERSON OR THINGS MAY COME WITHIN SIX(6) FEET OF LIVE OVERHEAD HIGH VOLTAGE LINES; AND
   * OPERATING A CRANE, DERRICK, POWER SHOVEL, DRILLING RIG, PILE DRIVER, HOISTING EQUIPMENT, OR SIMILAR APPARATUS WITHIN 10 FEET OF LIVE OVER HEAD HIGH VOLTAGE LINES.

   PARTIES RESPONSIBLE FOR WORK, INCLUDING CONTRACTORS, ARE LEGALLY RESPONSIBLE FOR SAFETY OF CONSTRUCTION WORKERS UNDER THIS LAW. THIS LAW CARRIES BOTH CRIMINAL AND CIVIL LIABILITY. TO ARRANGE FOR LINES TO BE TURNED OFF OR REMOVED CALL CENTERPOINT ENERGY AT (713)207-2222.
2. HAND DIG WITHIN ONE (1) FOOT OF CENTERPOINT UNDERGROUND CONDUIT OR CABLE SYSTEMS.

CENTERPOINT ENERGY

1. CAUTION: UNDERGROUND GAS FACILITIES

   LOCATIONS OF CENTERPOINT ENERGY MAIN LINES (TO INCLUDE CENTERPOINT ENERGY, INTRASTATE PIPELINE, LLC. WHERE APPLICABLE) ARE SHOWN IN AN APPROXIMATE LOCATION ONLY. SERVICE LINES ARE USUALLY NOT SHOWN. OUR SIGNATURE ON THESE PLANS ONLY INDICATES THAT OUR FACILITIES ARE SHOWN IN APPROXIMATE LOCATION. IT DOES NOT IMPLY THAT A CONFLICT ANALYSIS HAS BEEN MADE. THE CONTRACTOR SHALL CONTACT THE UTILITY COORDINATING COMMITTEE AT (713) 233-4567 OR 1-800-669-8344 A MINIMUM OF 48 HOURS PRIOR TO CONSTRUCTION TO HAVE MAIN AND SERVICE LINES FIELD LOCATED.

   * WHEN CENTERPOINT ENERGY PIPELINE MARKINGS ARE NOT VISIBLE, CALL (713) 967-8037 (7:00 A.M. TO 4:30 P.M.) FOR STATUS OF LINE LOCATION REQUEST BEFORE EXCAVATION BEGINS.
   * WHEN EXCAVATING WITHIN EIGHTEEN INCHES (18") OF INDICATED LOCATION OF CENTERPOINT ENERGY FACILITIES, ALL EXCAVATION MUST BE ACCOMPLISHED USING NON-MECHANIZED EXCAVATION PROCEDURES.
   * WHEN CENTERPOINT ENERGY FACILITIES ARE EXPOSED, SUFFICIENT SUPPORT MUST BE PROVIDED TO FACILITIES TO PREVENT EXCESSIVE STRESS ON THE PIPING.

2. THE CONTRACTOR IS FULLY RESPONSIBLE FOR ANY DAMAGES CAUSED BY THE CONTRACTOR'S FAILURE TO EXACTLY LOCATE AND PRESERVE THESE UNDERGROUND FACILITIES

AT&T TEXAS/SBC FACILITIES

1. THE LOCATIONS OF AT&T TEXAS/SBC FACILITIES ARE SHOWN IN AN APPROXIMATE WAY ONLY. THE CONTRACTOR SHALL DETERMINE THE EXACT LOCATION BEFORE COMMENCING WORK. HE AGREES TO BE FULLY RESPONSIBLE FOR ANY AND ALL DAMAGES WHICH MIGHT BE OCCASIONED BY THIS FAILURE TO EXACTLY LOCATE AND PRESERVE THESE UNDERGROUND UTILITIES.
2. THE CONTRACTOR SHALL CALL 1-800-344-8377 A MINIMUM OF 48 HOURS PRIOR TO CONSTRUCTION TO HAVE UNDERGROUND LINES FIELD LOCATED.
3. WHEN EXCAVATING WITHIN EIGHTEEN INCHES (18") OF THE INDICATED LOCATION OF AT&T TEXAS/SBC FACILITIES, ALL EXCAVATIONS MUST BE ACCOMPLISHED USING NON-MECHANIZED EXCAVATION PROCEDURES. WHEN BORING, THE CONTRACTOR SHALL EXPOSE THE AT&T TEXAS/SBC FACILITIES.
4. WHEN AT&T TEXAS/SBC FACILITIES ARE EXPOSED, THE CONTRACTOR WILL PROVIDE SUPPORT TO PREVENT DAMAGE TO THE CONDUIT DUCTS OR CABLES. WHEN EXCAVATING NEAR TELEPHONE POLES, THE CONTRACTOR SHALL BRACE THE POLE FOR SUPPORT.
5. THE PRESENCE OR ABSENCE OF AT&T TEXAS/SBC UNDERGROUND CONDUIT FACILITIES DOES NOT MEAN THAT THERE ARE NO DIRECT BURIED CABLES IN THE AREA. FOLLOW THE DIRECT BURIED CABLE PROCEDURES TO LOCATE THE AT&T TEXAS/SBC DIRECT BURIED CABLES AS INDICATED IN THE AT&T TEXAS RESEARCH AND SIGNATURE PROCESS FOR AT&T TEXAS/SBC FACILITIES.

METRO

1. THE CONTRACTOR SHALL CONTACT METRO BUS OPERATIONS, MR. PAUL WEISSER AT (713) 615-7223, WHEN CONSTRUCTION STARTS AND AT LEAST FIVE (5) WORKING DAYS IN ADVANCE WHEN WORK IS SCHEDULED NEAR A BUS STOP.

GENERAL NOTES:

1. SPRINKLER SYSTEM EXISTS THROUGHOUT PROJECT. ANY DAMAGED SPRINKLER SYSTEM COMPONENTS SHALL BE REMOVED AND REPLACED TO EXISTING OR BETTER CONDITIONS IN ACCORDANCE WITH SPECIFICATIONS SECTION 01110.
2. THE FOLLOWING IS A LIST OF CONTACTS FOR PIPELINE COMPANIES WHO ARE IMPACTED BY THE PROJECT:

TEPPCO
A MINIMUM OF 48 HOURS (EXCLUDING WEEKENDS AND HOLIDAYS) PRIOR TO COMMENCING CONSTRUCTION OR BORING OPERATIONS OF THE WATER LINE AROUND 24" TEPPCO (ENTERPRISE) PIPELINE, CALL 1.800.344.8377 SO THAT A TEPPCO (ENTERPRISE) EMPLOYEE CAN BE PRESENT FOR OBSERVATION AND SAFETY PURPOSES.

KINDER MORGAN
CONTACT MR. JOSEPH KRAMETBAUER 713.369.9508 EXT. 223, AT LEAST 72 HOURS (EXCLUDING WEEKENDS AND HOLIDAYS) PRIOR TO COMMENCING CONSTRUCTION OR BORING OPERATIONS OF THE WATER LINE WITHIN 25 FEET OF KINDER MORGAN PIPELINE. IN ADDITION TEXAS ONE CALL NOTIFICATION CENTER MUST BE CONTACTED AT 1.800.344.8377 LEAST 72 HOURS (EXCLUDING WEEKENDS AND HOLIDAYS) PRIOR TO COMMENCING CONSTRUCTION

HOUSTON PIPELINE CO.
CONTACT MR. JOHNNY MARTINEZ 281.850.1462 FORTY EIGHT (48) HOURS PRIOR TO ANY WORK (EXCAVATION OR OPERATION OF HEAVY EQUIPMENT) AT OR NEAR THE 6-INCH HOUSTON PIPELINE. IN ADDITION TO CONTACTING THE HPL REPRESENTATIVE MENTIONED ABOVE, THE TEXAS EXCAVATION SAFETY SYSTEM (TESS) NOTIFICATION CENTER MUST BE CONTACTED AT 811 OR 1.800.344.8377 PRIOR TO ANY CONSTRUCTION ACTIVITY.

GENERAL CONSTRUCTION NOTES

1. CONSTRUCT WASTEWATER COLLECTION SYSTEMS, WATER LINES, STORM DRAINAGE AND STREET PAVING IN ACCORDANCE WITH THE LATEST EDITION OF THE PUBLICATIONS STANDARD CONSTRUCTION SPECIFICATIONS FOR WASTEWATER COLLECTION SYSTEMS, WATER LINES, STORM DRAINAGE, AND STREET PAVING AND STANDARD CONSTRUCTION DETAILS FOR WASTEWATER COLLECTION SYSTEMS, WATER LINES, STORM DRAINAGE, AND STREET PAVING PUBLISHED BY THE CITY OF HOUSTON, DEPARTMENT OF PUBLIC WORKS AND ENGINEERING.
2. THE GEOTECHNICAL INVESTIGATION FOR THIS PROJECT WAS CONDUCTED IN ACCORDANCE WITH CHAPTER 11 OF THE LATEST EDITION OF THE PUBLICATION INFRASTRUCTURE DESIGN MANUAL, PUBLISHED BY THE CITY OF HOUSTON, DEPARTMENT OF PUBLIC WORKS AND ENGINEERING. SOILS REPORT WAS PREPARED BY AVILES ENGINEERING CORP. REPORT NO. G137-10 , DATED DECEMBER 2010.
3. UTILITIES PRESENTED ON THESE DRAWINGS ARE SHOWN BASED ON THE BEST AVAILABLE INFORMATION. CONTRACTOR SHALL VERIFY THE EXACT LOCATIONS IN THE FIELD PRIOR TO COMMENCING CONSTRUCTION. CONTRACTOR SHALL NOTIFY TEXAS ONE CALL AT 713-223-4567/800-245-4545 AND LONE STAR ONE CALL AT 800-669-8344 AT LEAST 48 HOURS BEFORE PROCEEDING WITH ANY EXCAVATION.
4. CONTRACTOR SHALL BE RESPONSIBLE FOR DAMAGES TO EXISTING WATER, WASTEWATER, STORM WATER LINES AND TRAFFIC CONTROL DEVICES. DAMAGES SHALL BE REPAIRED IN ACCORDANCE WITH THE CITY OF HOUSTON, DEPARTMENT OF PUBLIC WORKS AND ENGINEERING'S STANDARD CONSTRUCTION SPECIFICATIONS FOR WASTEWATER COLLECTION SYSTEMS, WATER LINES, STORM DRAINAGE, AND STREET PAVING AND STANDARD CONSTRUCTION DETAILS FOR WASTEWATER COLLECTION SYSTEMS, WATER LINES, STORM DRAINAGE, AND STREET PAVING, REFERENCED ABOVE, AT NO ADDITIONAL COST.
5. CONTRACTOR SHALL NOTIFY THE OFFICE OF THE CITY ENGINEER, DEPARTMENT OF PUBLIC WORKS AND ENGINEERING AT 713-863-1450 FOR INSPECTION AT LEAST 48 HOURS PRIOR TO COMMENCING CONSTRUCTION.
6. ADEQUATE DRAINAGE SHALL BE MAINTAINED AT ALL TIMES DURING CONSTRUCTION AND ANY DRAINAGE DITCH OR STRUCTURE DISTURBED DURING CONSTRUCTION SHALL BE RESTORED TO EXISTING CONDITIONS OR BETTER.
7. CONTRACTOR SHALL TAKE NECESSARY PRECAUTIONS TO PROTECT ROOT SYSTEMS OF SHRUBS, PLANS AND TREES ALONG THE AREA OF EXCAVATION.
8. CONTRACTOR SHALL COMPLY WITH LATEST EDITION OF OSHA REGULATIONS AND THE STATE OF TEXAS LAWS CONCERNING EXCAVATION.
9. CONTRACTOR SHALL MAINTAIN A SET OF REDLINE DRAWINGS RECORDING AS-BUILT CONDITIONS DURING CONSTRUCTION. THESE REDLINE MARKED UP DRAWINGS WILL BE SUBMITTED TO THE DESIGN CONSULTANT WHO WILL MAKE THE CHANGES ON THE ORIGINAL TRACINGS, LABELING EACH SHEET IN THE SET AS "RECORD DRAWINGS", AND RETURNING SAME TO THE CITY ENGINEER.
10. SIDEWALKS ON MAJOR THOROUGHFARES ARE TYPICALLY 4' WIDE WHEN NOT ADJACENT TO BACK OF CURB OR 5' WIDE WHEN ADJACENT TO BACK OF CURBS, UNLESS DESIGNATED ON PLANS OTHERWISE. SIDEWALKS ON RESIDENTIAL AND /OR COLLECTOR STREET ARE TYPICALLY 4' WIDE, UNLESS DESIGNATED ON PLANS OTHERWISE.
11. THIS PROJECT SHALL BE BUILT BY MEANS OF OPEN CUT EXCEPT AS NOTED ON THE DRAWINGS. CONTRACTOR TO DETERMINE THE LOCATIONS OF BORE PITS IN FIELD SUBJECT TO THE CITY ENGINEER'S APPROVAL.
12. THE SIZES OF WATER METERS SHOWN BUT NOT SPECIFICALLY CALLED OUT IN THIS PROJECT ARE ONE INCH OR SMALLER STANDARD CITY OF HOUSTON WATER METERS. ALL OTHER SIZES LARGER THAN ONE INCH ARE SPECIFICALLY CALLED OUT ON THESE DRAWINGS.

STANDARD HCFCD NOTES

1. NOTIFY THE HARRIS COUNTY FLOOD CONTROL DISTRICT, PROPERTY MANAGEMENT DEPARTMENT IN WRITING AT LEAST 48 HOUR PRIOR TO CONSTRUCTION. SUBMIT THE HCFCD 48 HOUR PRE-CONSTRUCTION NOTIFICATION FORM AND A COPY OF THE APPROVED CONSTRUCTION DRAWINGS TO HCFCD, 9900 NORTHWEST FREEWAY, HOUSTON, TEXAS 77092, ATTN: PROPERTY MANAGEMENT DEPT.
2. ENGINEER SHALL SUBMIT CERTIFICATION LETTER AND RECORD DRAWINGS TO THE HARRIS COUNTY FLOOD CONTROL DISTRICT, PROPERTY MANAGEMENT DEPARTMENT, REQUESTING INSPECTION OF ITEMS CONSTRUCTED IN HARRIS COUNTY FLOOD CONTROL DISTRICT RIGHT-OF-WAY. PRIOR TO REQUESTING INSPECTION, THE DRAINAGE RIGHT-OF-WAY AND/OR EASEMENTS SHALL BE STAKED AND FLAGGED.
3. PROTECT, MAINTAIN, AND RESTORE EXISTING BACKSLOPE DRAINAGE SYSTEMS.
4. BACKSLOPE SWALE AND INTERCEPTOR STRUCTURE ELEVATIONS AND LOCATIONS SHOWN ON PLANS ARE APPROXIMATE. FINAL ELEVATIONS AND LOCATIONS SHALL BE FIELD VERIFIED BY THE ENGINEER PRIOR TO INSTALLATION.
5. ESTABLISH TURF GRASS ON ALL DISTURBED AREAS WITHIN THE CHANNEL OR DETENTION RIGHT-OF-WAY, EXCEPT THE CHANNEL BOTTOM AND WHERE STRUCTURAL EROSION MEASURES ARE USED. MINIMUM ACCEPTANCE CRITERIA ARE 75% COVERAGE OF LIVE BERMUDA GRASS AND NO EROSION OR RILLS DEEPER THAN 4".
6. BACKFILL IN ACCORDANCE WITH THE HARRIS COUNTY FLOOD CONTROL DISTRICT STANDARD SPECIFICATION, SECTION 02315 – EXCAVATING AND BACKFILLING, OR EQUIVALENT.
7. EXCAVATE CHANNEL FLOWLINE TO DISIGN ELEVATION AS SHOWN ON PLANS AND DOWNSTREAM, AS NECESSARY, TO ENSURE NO WATER IN STORM SEWER DURING "DRY" CONDITIONS.
8. MAINTAIN FLOW IN CHANNEL DURING CONSTRUCTION AND RESTORE CHANNEL TO ORIGINAL CONDITION.
9. REMOVE ALL EXCAVATED MATERIAL FROM THE HARRIS COUNTY FLOOD CONTROL DISTRICT OR DRAINAGE RIGHT-OF-WAY. NO FILL IS TO BE PLACED WITHIN A DESIGNATED FLOOD PLAIN AREA WITHOUT FIRST OBTAINING A FILL PERMIT FROM THE APPROPRIATE JURISDICTIONAL AUTHORITY.
10. OBTAIN AND COMPLY WITH ALL APPLICABLE CITY, COUNTY, STATE, AND FEDERAL PERMITS AND APPROVALS, WITH ASSISTANCE FROM ENGINEER, IF NECESSARY.

DETAILS

CITY OF HOUSTON STANDARD DETAILS FOR WASTEWATER COLLECTION SYSTEMS, WATERLINES, STORM DRAINAGE, AND STREET PAVING ARE INCORPORATED IN PLANS BY REFERENCE AS IF COPIED VERBATIM. STANDARD DETAILS ARE AVAILABLE FOR DOWNLOAD AT THE FOLLOWING WEB ADDRESS:
http://documents.publicworks.houstontx.gov/document-center/standard-details/index.htm

DETAILS INCLUDED IN PLAN SET SUPERSEDE RELATED COH STANDARD DETAILS.

STREET AND BRIDGE NOTES

1. FILL AREAS ON PLANS SHALL BE FILLED IN LAYERS NOT EXCEEDING 8" IN DEPTH AND EACH COMPACTED TO NOT LESS THAN 95% STANDARD PROCTOR DENSITY PRIOR TO INSTALLATION OF WATER LINE. AND FILL AREA SHALL BE SEEDED AND FERTILIZED WITHIN CONTRACT WORKING DAYS.
2. UTILITY CONTRACTOR SHALL PROVIDE TEMPORARY SILT BARRIER FENCE ON ALL NON-CURB INLETS WHICH WILL REMAIN IN PLACE AFTER UNDERGROUND CONTRACT IS COMPLETE.
3. CONTRACTOR SHALL PROVIDE SILT BARRIER FENCE ON ALL STAGE 1 CURB INLETS.
4. CONDITION OF ROAD AND/OR RIGHT OF WAY, UPON COMPLETION OF JOB SHALL BE AS GOOD AS OR BETTER THAN PRIOR TO STARTING WORK.
5. EXPOSE 15" OF REINFORCING STEEL AT PROPOSED SAWED JOINT, IF NO REINFORCING STEEL EXISTS. USE HORIZONTAL DOWELS. HORIZONTAL DOWELS SHALL BE #6 BARS, 24" LONG, 24" C-C, DRILLED AND EMBEDDED 8" INTO CENTER OF THE EXISTING SLAB WITH "PRO PAC" OR EQUAL.
6. WHEEL CHAIR RAMPS SHALL BE INSTALLED IN ACCORDANCE WITH CITY OF HOUSTON STANDARDS AT ALL INTERSECTIONS WHERE SIDEWALKS EXIST AND THE EXISTING CURB OR SIDEWALK IS DAMAGED OR REMOVED DURING CONSTRUCTION.

HARRIS COUNTY TRAFFIC SIGNAL (TRANSTAR)

1. FIBER OPTIC DUCT BANKS OWNED BY TXDOT AND HARRIS COUNTY MAY ALSO EXIST WITHIN THE PROJECT LIMITS. THESE FIBER DUCT BANKS ARE NOT PART OF THE TEXAS ONE CALL SYSTEM. THE CONTRACTOR SHALL CONTACT TXDOT AND HARRIS COUNTY TO OBTAIN FIBER OPTIC DUCT BANK LOCATES AT THE FOLLOWING NUMBERS: HARRIS COUNTY TRAFFIC SIGNAL HOTLINE 713-881-3210.
2. IF THE CONTRACTOR DAMAGES ANY AND ALL FIBER OPTIC LINES IN THE DUCT BANK, THE CONTRACTOR WILL BE RESPONSIBLE FOR THE COST OF PROPERLY REPAIRING OR REPLACING THE DAMAGED DUCT BANK AND FIBER TO THE ORIGINAL CONDITION. IN ADDITION, THE CONTRACTOR WILL BE LIABLE FOR LIQUIDATED DAMAGES OF $1,250 PER DAY FOR EACH DAY HARRIS COUNTY'S FIBER OPTIC LINES ARE INOPERABLE, WHICH AMOUNT THE PARTIES AGREE IS A REASONABLE ESTIMATE OF THE MINIMUM AMOUNT OF LOSS HARRIS COUNTY WILL INCUR IF THE FIBER OPTIC LINES ARE INOPERABLE. IF THE EXTENT OF HARRIS COUNTY'S CONSEQUENTIAL DAMAGES (INCLUDING LOSS OF REVENUE, LOSS OF USE OF DATA, COSTS OF MITIGATION, ETC.) RESULTING FROM THE DAMAGED FIBER OPTIC LINES EXCEEDS THE AGREED UPON LIQUIDATED DAMAGES AMOUNT, THE CONTRACTOR WILL BE LIABLE FOR SUCH GREATER AMOUNT.

No.	Date	Revisions	Appr.

SWTP
Surface Water Transmission Program

NOTICE:
AT LEAST 48 HOURS BEFORE EXCAVATION IN STREET R.O.W. OR EASEMENTS CALL THE LONE STAR NOTIFICATION 713-223-4567

PRIVATE UTILITY LINES SHOWN

Date: 1-6-11
CENTERPOINT ENERGY/ELECTRIC FACILITIES
(APPROVED ONLY FOR CROSSING UNDERGROUND DUCTLINES UNLESS OTHERWISE NOTED.) VALID AT TIME OF REVIEW ONLY.

Date: 1-6-11
CENTERPOINT ENERGY/GAS FACILITIES
(GAS SERVICE LINES ARE NOT SHOWN)

Date: 1-6-11
Approved for AT&T Texas/SBC underground conduit facilities only.
SIGNATURE VALID FOR ONE YEAR

Date:
CABLE COMPANY
SIGNATURE VALID FOR ONE YEAR

LAN
Lockwood, Andrews & Newnam, Inc.
A LEO A DALY COMPANY
2925 Briarpark Drive Houston, TX 77042

1-3-11
STATE OF TEXAS
ALISA GRUBER
95685
LICENSED PROFESSIONAL ENGINEER
Lockwood, Andrews & Newnam, Inc. Firm No. 2614

SURVEYED BY:
KUO & ASSOCIATES, INC.
C.O.H. Field Book P-5554

CITY OF HOUSTON
DEPARTMENT OF PUBLIC WORKS AND ENGINEERING

SWTP CONTRACT 74A-1

GENERAL AND CONSTRUCTION NOTES

WBS NO.	S-000900-0109-4
DRAWING SCALE	NOT TO SCALE
CITY OF HOUSTON PM	ARTHUR C. MORRIS, P.E.
SHEET NO.	3 OF 91

PUBLIC WORKS AND ENGINEERING
ACCEPTED AND FILED
48326
CITY DRAWING NUMBER
HOUSTON, TEXAS

KUO

jmsalsu
4:20:48 PM
12/28/2010
I:\130-10337-004\4-a-production\4-01-arow\tga\General\03-10337-4-Construction Notes.dgn

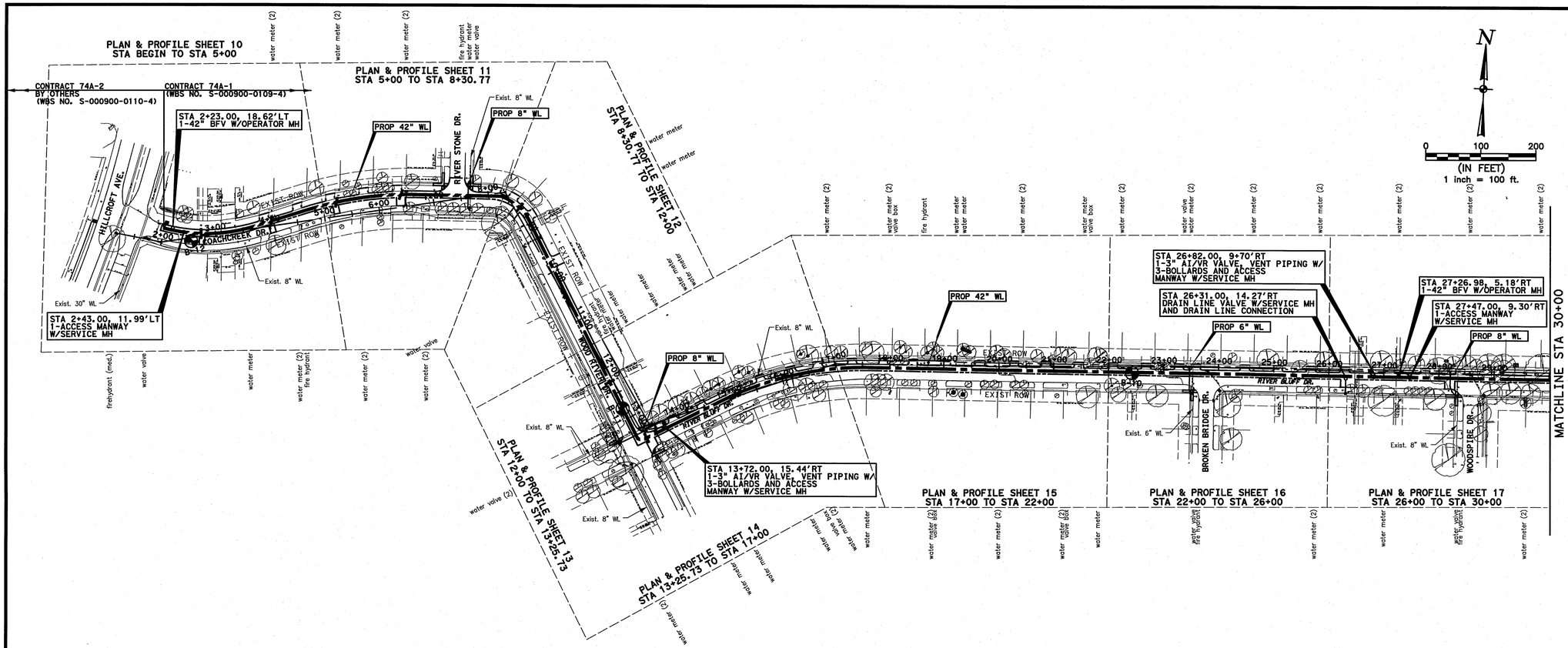

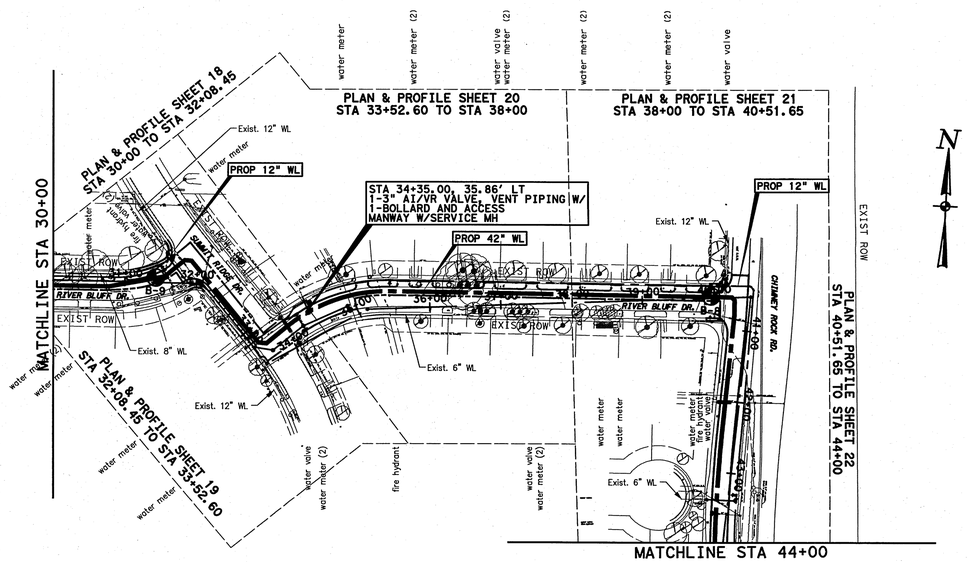

NOTES:

1. THE LAYOUT SKETCH OF THE PROPOSED WATER LINES ARE SHOWN IN APPROXIMATION ONLY. THIS SHEET IS FOR GENERAL INFORMATION.
2. ALL STATIONS NOTED ARE BASELINE STATIONS
3. THE CITY OF HOUSTON MAKES NO EXPRESSED OR IMPLIED GUARANTEE AS TO THE ACCURACY OR COMPLETENESS OF THE GEOTECHNICAL ENGINEERING STUDIES NOR THE INTERPRETATION THEREOF.
4. FOR BORING INFORMATION SEE REPORT OF GEOTECHNICAL INVESTIGATION SURFACE WATER TRANSMISSION PROGRAM.

SWTP
Surface Water Transmission Program

Lockwood, Andrews & Newnam, Inc.
A LEO A DALY COMPANY
2925 Briarpark Drive Houston, TX 77042

SURVEYED BY:
KUO & ASSOCIATES, INC.
C.O.H. Field Book P-5554

1-3-11
STATE OF TEXAS
ALISA GRUBER
95685
LICENSED PROFESSIONAL ENGINEER
Lockwood, Andrews & Newnam, Inc.
Firm No. 2614

CITY OF HOUSTON
DEPARTMENT OF PUBLIC WORKS AND ENGINEERING

SWTP CONTRACT 74A-1

SHEET LAYOUT

SHEET 1 OF 2

WBS NO.	S-000900-0109-4
DRAWING SCALE	
SCALE: 1"=100'	
CITY OF HOUSTON PM	
ARTHUR C. MORRIS, P.E.	
SHEET NO.	4 OF 91

ACCEPTED AND FILED
48326
CITY DRAWING NUMBER

No.	Date	Revisions	App.

12/28/2010 4:20:50 PM jmusiau
I:\130-1037-004\4-0-product\ion\4-01-drawings\General\04-1037-4-Sheet-Layout-01.dgn

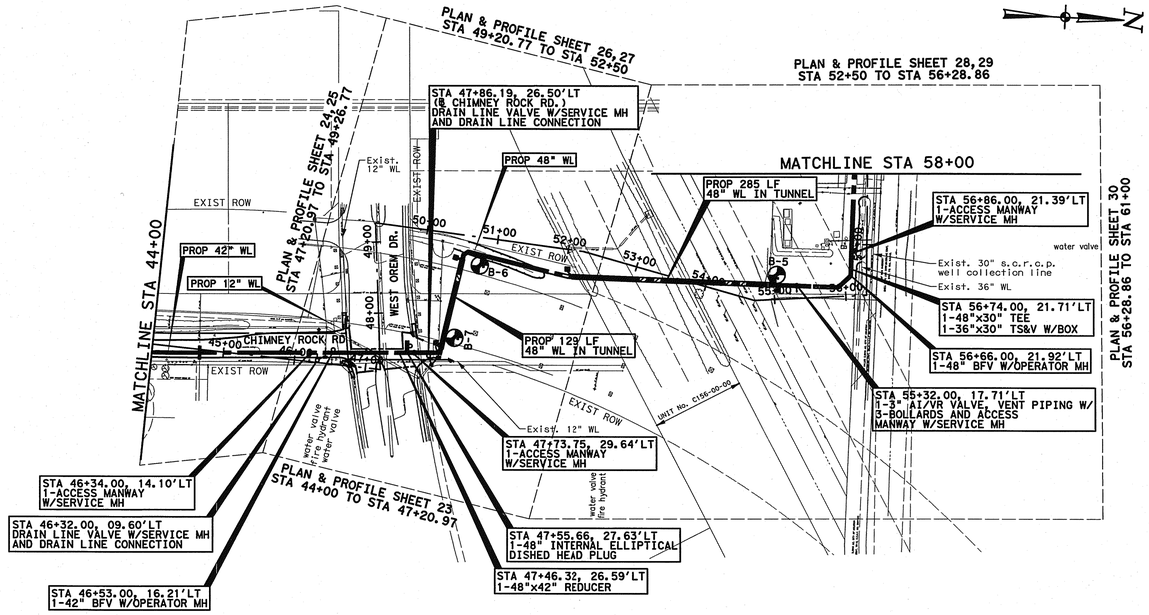

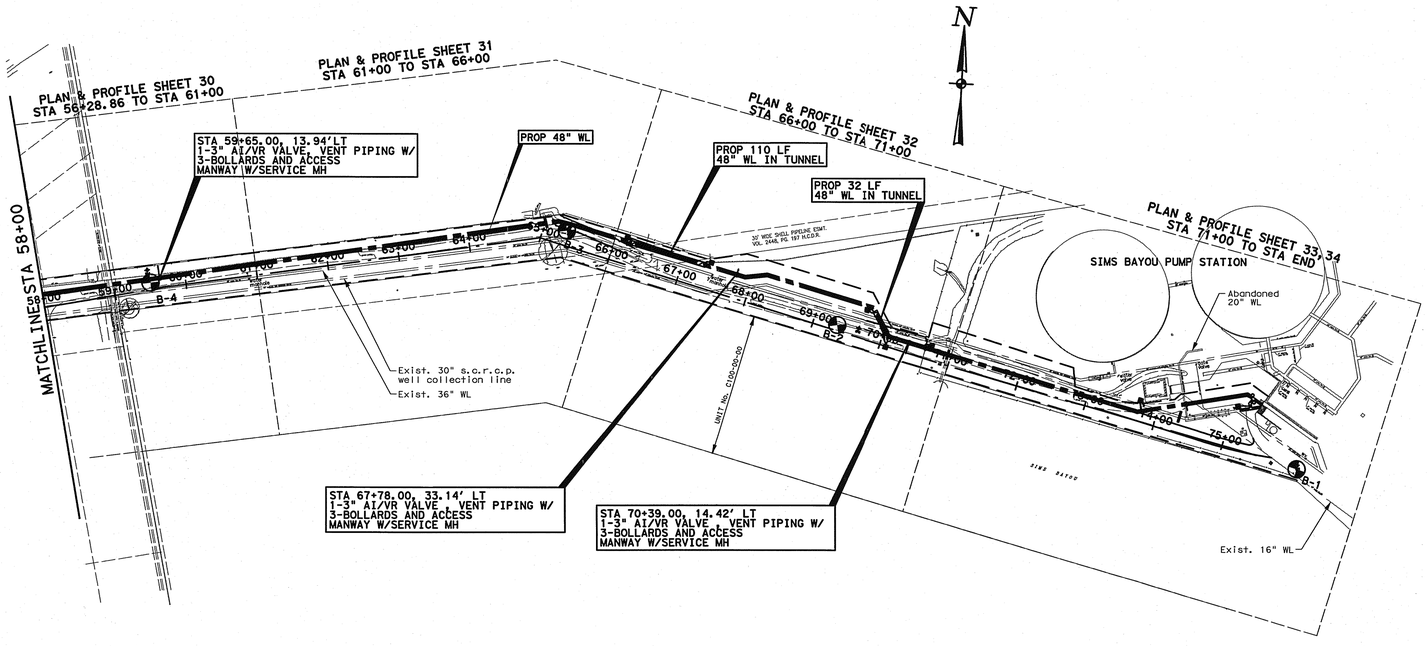

LEGEND

- B-1 — SOIL BORING LOCATION
- PROPOSED WATER LINE
- PROPOSED ACCESS MANWAY
- PROPOSED BUTTERFLY VALVE

NOTES:

1. THE LAYOUT SKETCH OF THE PROPOSED WATER LINES ARE SHOWN IN APPROXIMATION ONLY. THIS SHEET IS FOR GENERAL INFORMATION.
2. ALL STATIONS NOTED ARE BASELINE STATIONS
3. THE CITY OF HOUSTON MAKES NO EXPRESSED OR IMPLIED GUARANTEE AS TO THE ACCURACY OR COMPLETENESS OF THE GEOTECHNICAL ENGINEERING STUDIES NOR THE INTERPRETATION THEREOF.
4. FOR BORING INFORMATION SEE REPORT OF GEOTECHNICAL INVESTIGATION SURFACE WATER TRANSMISSION PROGRAM.

SWTP
Surface Water Transmission Program

Lockwood, Andrews & Newnam, Inc.
A LEO A DALY COMPANY
2925 Briarpark Drive Houston, TX 77042

SURVEYED BY:
KUO & ASSOCIATES, INC.
C.O.H. Field Book P-5554

1-3-11
STATE OF TEXAS
ALISA GRUBER
95685
LICENSED PROFESSIONAL ENGINEER
Lockwood, Andrews & Newnam, Inc
Firm No. 2614

CITY OF HOUSTON
DEPARTMENT OF PUBLIC WORKS AND ENGINEERING

SWTP CONTRACT 74A-1

SHEET LAYOUT

SHEET 2 OF 2

WBS NO. S-000900-0109-4	
DRAWING SCALE	
SCALE: 1"=100'	
CITY OF HOUSTON PM	
ARTHUR C. MORRIS, P.E.	
SHEET NO. 5 OF 91	

ADOPTED AND FILED
48326
CITY DRAWING NUMBER

No.	Date	Revisions	App.

12/28/2010 4:20:32 PM jmusiku
I:\130-1037-004\4-0-production\ent\4-01-drawings\General\105-1037-4-Sheet-Layout-02.dgn
12/28/2010

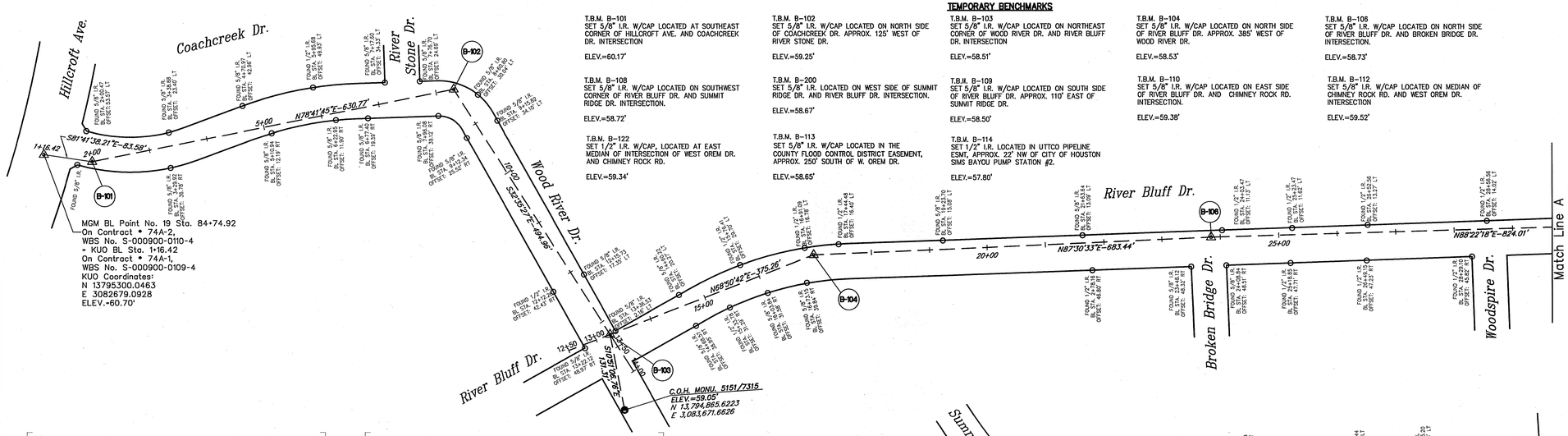

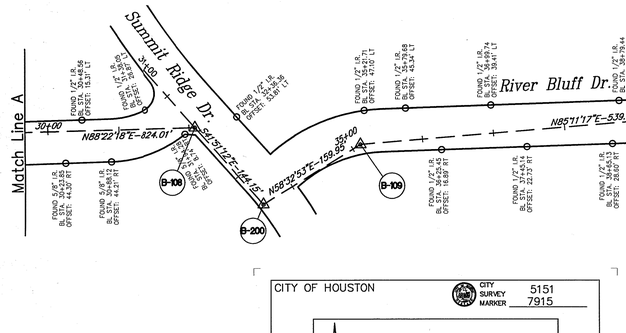

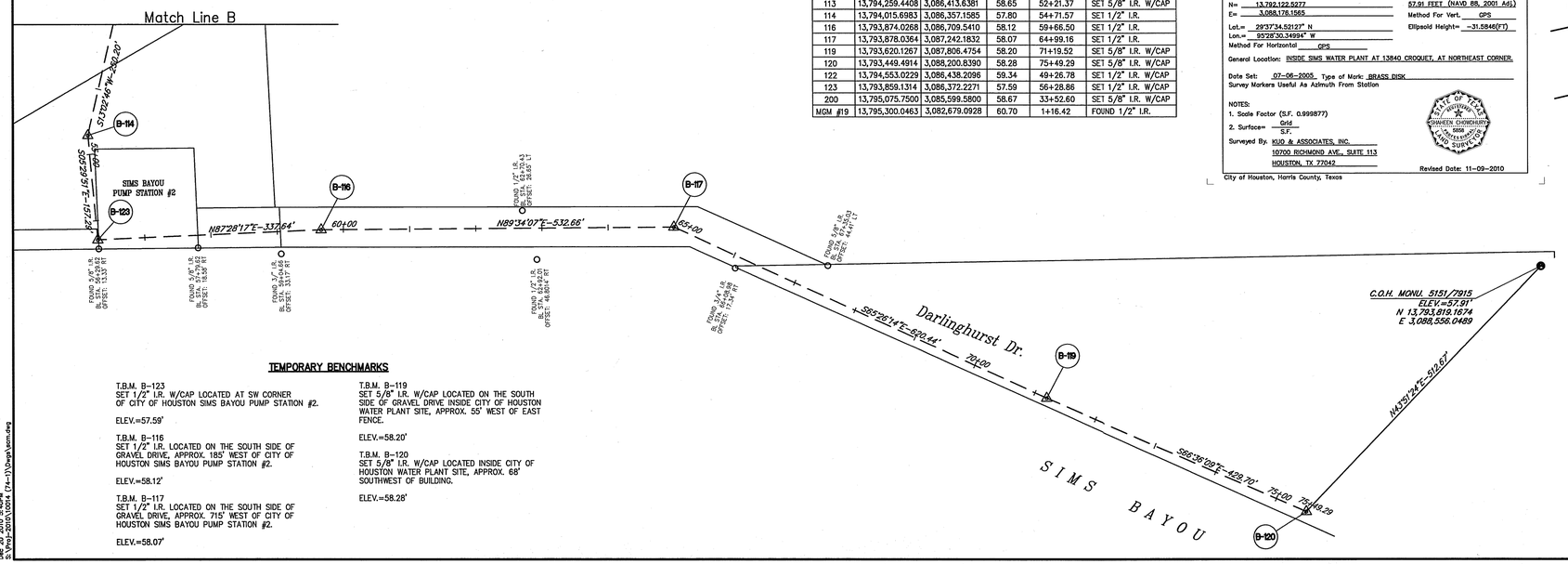

TEMPORARY BENCHMARKS

T.B.M. B-101
SET 5/8" I.R. W/CAP LOCATED AT SOUTHEAST CORNER OF HILLCROFT AVE. AND COACHCREEK DR. INTERSECTION

ELEV.=60.17'

T.B.M. B-102
SET 5/8" I.R. W/CAP LOCATED ON NORTH SIDE OF COACHCREEK DR. APPROX. 125' WEST OF RIVER STONE DR.

ELEV.=59.25'

T.B.M. B-103
SET 5/8" I.R. W/CAP LOCATED ON NORTHEAST CORNER OF WOOD RIVER DR. AND RIVER BLUFF DR. INTERSECTION

ELEV.=58.51'

T.B.M. B-104
SET 5/8" I.R. W/CAP LOCATED ON NORTH SIDE OF RIVER BLUFF DR. APPROX. 385' WEST OF WOOD RIVER DR.

ELEV.=58.53'

T.B.M. B-106
SET 5/8" I.R. W/CAP LOCATED ON NORTH SIDE OF RIVER BLUFF DR. AND BROKEN BRIDGE DR. INTERSECTION.

ELEV.=58.73'

T.B.M. B-108
SET 5/8" I.R. W/CAP LOCATED ON SOUTHWEST CORNER OF RIVER BLUFF DR. AND SUMMIT RIDGE DR. INTERSECTION.

ELEV.=58.72'

T.B.M. B-200
SET 5/8" I.R. LOCATED ON WEST SIDE OF SUMMIT RIDGE DR. AND RIVER BLUFF DR. INTERSECTION.

ELEV.=58.67'

T.B.M. B-109
SET 5/8" I.R. W/CAP LOCATED ON SOUTH SIDE OF RIVER BLUFF DR. APPROX. 110' EAST OF SUMMIT RIDGE DR.

ELEV.=58.50'

T.B.M. B-110
SET 5/8" I.R. W/CAP LOCATED ON EAST SIDE OF RIVER BLUFF DR. AND CHIMNEY ROCK RD. INTERSECTION.

ELEV.=59.38'

T.B.M. B-112
SET 5/8" I.R. W/CAP LOCATED ON MEDIAN OF CHIMNEY ROCK RD. AND WEST OREM DR. INTERSECTION

ELEV.=59.52'

T.B.M. B-122
SET 1/2" I.R. W/CAP, LOCATED AT EAST MEDIAN OF INTERSECTION OF WEST OREM DR. AND CHIMNEY ROCK RD.

ELEV.=59.34'

T.B.M. B-113
SET 5/8" I.R. W/CAP LOCATED IN THE COUNTY FLOOD CONTROL DISTRICT EASEMENT, APPROX. 250' SOUTH OF W. OREM DR.

ELEV.=58.65'

T.B.M. B-114
SET 1/2" I.R. LOCATED IN UTTCO PIPELINE ESMT., APPROX. 22' NW OF CITY OF HOUSTON SIMS BAYOU PUMP STATION #2.

ELEV.=57.80'

T.B.M. B-123
SET 1/2" I.R. W/CAP LOCATED AT SW CORNER OF CITY OF HOUSTON SIMS BAYOU PUMP STATION #2.

ELEV.=57.59'

T.B.M. B-116
SET 1/2" I.R. LOCATED ON THE SOUTH SIDE OF GRAVEL DRIVE, APPROX. 185' WEST OF CITY OF HOUSTON SIMS BAYOU PUMP STATION #2.

ELEV.=58.12'

T.B.M. B-117
SET 1/2" I.R. LOCATED ON THE SOUTH SIDE OF GRAVEL DRIVE, APPROX. 715' WEST OF CITY OF HOUSTON SIMS BAYOU PUMP STATION #2.

ELEV.=58.07'

T.B.M. B-119
SET 5/8" I.R. W/CAP LOCATED ON THE SOUTH SIDE OF GRAVEL DRIVE INSIDE CITY OF HOUSTON WATER PLANT SITE, APPROX. 55' WEST OF EAST FENCE.

ELEV.=58.20'

T.B.M. B-120
SET 5/8" I.R. W/CAP LOCATED INSIDE CITY OF HOUSTON WATER PLANT SITE, APPROX. 68' SOUTHWEST OF BUILDING.

ELEV.=58.28'

SURVEY BASELINE POINTS DATA (TEMPORARY BENCHMARK)

Point No.	Northing	Easting	Elev. (Ft.)	S. BL Sta.	Description
101	13,795,287.9716	3,082,761.8007	60.17	2+00	SET 5/8" I.R. W/CAP
102	13,795,411.6149	3,083,380.3339	59.25	8+30.77	SET 5/8" I.R. W/CAP
103	13,794,994.5882	3,083,646.9400	58.51	13+25.73	SET 5/8" I.R. W/CAP
104	13,795,130.0167	3,083,996.9105	58.53	17+01	SET 5/8" I.R. W/CAP
106	13,795,159.7180	3,084,679.7064	58.73	23+84.44	SET 5/8" I.R. W/CAP
108	13,795,183.1339	3,085,503.3878	58.72	32+08.45	SET 5/8" I.R. W/CAP
109	13,795,159.2188	3,085,736.0188	58.50	35+12.55	SET 5/8" I.R. W/CAP
110	13,795,204.4413	3,086,273.2167	59.38	40+51.65	SET 5/8" I.R. W/CAP
112	13,794,536.3045	3,086,233.0926	59.52	47+20.99	SET 5/8" I.R. W/CAP
113	13,794,259.4408	3,086,413.6381	58.65	52+21.37	SET 5/8" I.R. W/CAP
114	13,794,015.6983	3,086,357.1585	57.80	54+71.57	SET 1/2" I.R.
116	13,793,874.0268	3,086,709.5410	58.12	59+66.50	SET 1/2" I.R.
117	13,793,878.0364	3,087,242.1832	58.07	64+99.16	SET 1/2" I.R.
119	13,793,620.1267	3,087,806.4754	58.20	71+19.52	SET 5/8" I.R. W/CAP
120	13,793,449.4914	3,088,200.8390	58.28	75+49.29	SET 5/8" I.R. W/CAP
122	13,794,553.0229	3,086,438.2096	59.34	49+26.78	SET 1/2" I.R. W/CAP
123	13,793,859.1314	3,086,372.2271	57.59	56+28.86	SET 1/2" I.R. W/CAP
200	13,795,075.7500	3,085,599.5800	58.67	33+52.60	SET 5/8" I.R. W/CAP
MGM #19	13,795,300.0463	3,082,679.0928	60.70	1+16.42	FOUND 1/2" I.R.

CITY OF HOUSTON — CITY SURVEY MARKER 5151 7715

ON MAP SHEET: 5151 A-2

NAD83 (CORS 96 EPOCH 2002.00) Texas S. C. Zone — Elevations Adjustment
N= 13,792,828.2774 — 60.47 FEET (NAVD 88, 2001 Adj)
E= 3086322.8486 — Method For Vert. GPS
Lat.= 29°37'42.05777" N — Ellipsoid Height= -29.0511 (FT)
Lon.= 95°28'51.10078" W
Method For Horizontal GPS

General Location: AT THE SOUTHWEST CORNER OF THE EASTBOUND BRIDGE ON W. OREM DR. OVER SIMS BAYOU

Date Set: 05-15-2003 Type of Mark: BRASS DISK, TSARP MONUMENT RM # 030130
Survey Markers Useful As Azimuth From Station

NOTES:
1. Scale Factor (S.F. 0.999877)
2. Surface= Grid / S.F.

Surveyed By: KUO & ASSOCIATES, INC.
10700 RICHMOND AVE., SUITE 113
HOUSTON, TX 77042

STATE OF TEXAS — REGISTERED — SHAHEEN CHOWDHURY — 5858 — PROFESSIONAL LAND SURVEYOR

Revised Date: 03-10-2010

City of Houston, Harris County, Texas

CITY OF HOUSTON — CITY SURVEY MARKER 5151 7315

ON MAP SHEET: 5151 A-1

NAD83 (CORS 96 EPOCH 2002.00) Texas S. C. Zone — Elevations Adjustment
N= 13,793,188.8538 — 59.05 FEET (NAVD 88, 2001 Adj)
E= 3,083,292.3710 — Method For Vert. GPS
Lat.= 29°37'46.32953" N — Ellipsoid Height= -30.4950 (FT)
Lon.= 95°29'25.31040" W
Method For Horizontal GPS

General Location: SOUTHWEST CORNER OF RIVER BLUFF DR. AND WOOD RIVER DR. INTERSECTION.

Date Set: 08-26-2010 Type of Mark: AA
Survey Markers Useful As Azimuth From Station

NOTES:
1. Scale Factor (S.F. 0.999877)
2. Surface= Grid / S.F.

Surveyed By: KUO & ASSOCIATES, INC.
10700 RICHMOND AVE., SUITE 113
HOUSTON, TX 77042

STATE OF TEXAS — REGISTERED — SHAHEEN CHOWDHURY — 5858 — PROFESSIONAL LAND SURVEYOR

City of Houston, Harris County, Texas

CITY OF HOUSTON — CITY SURVEY MARKER 5151 7915

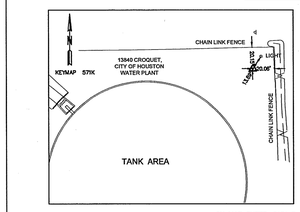

ON MAP SHEET: 5151 B-1

NAD83 (CORS 96 EPOCH 2002.00) Texas S. C. Zone — Elevations Adjustment
N= 13,792,122.5277 — 57.91 FEET (NAVD 88, 2001 Adj)
E= 3,088,176.1565 — Method For Vert. GPS
Lat.= 29°37'34.52127" N — Ellipsoid Height= -31.5846(FT)
Lon.= 95°28'30.34994" W
Method For Horizontal GPS

General Location: INSIDE SIMS WATER PLANT AT 13840 CROQUET, AT NORTHEAST CORNER.

Date Set: 07-06-2005 Type of Mark: BRASS DISK
Survey Markers Useful As Azimuth From Station

NOTES:
1. Scale Factor (S.F. 0.999877)
2. Surface= Grid / S.F.

Surveyed By: KUO & ASSOCIATES, INC.
10700 RICHMOND AVE., SUITE 113
HOUSTON, TX 77042

STATE OF TEXAS — REGISTERED — SHAHEEN CHOWDHURY — 5858 — PROFESSIONAL LAND SURVEYOR

Revised Date: 11-09-2010

City of Houston, Harris County, Texas

GRAPHIC SCALE
100 0 50 100
1 inch = 100 ft.

BENCHMARK:
CITY OF HOUSTON SURVEY MARKER 5151-7715, FLOODPLAIN REFERENCE MARK NUMBER 030130, A BRASS DISK STAMPED 030130 ON BRIDGE AT WEST OREM DRIVE (E-BOUND) AND SIMS BAYOU LOCATED ON DOWNSTREAM, SOUTH CONCRETE WALK, AT SE CORNER OF BRIDGE IN KEYMAP 571K IN THE SIMS WATERSHED NEAR STREAM C156-00-00.

ELEV. 60.47 FEET NAVD 1988, 2001 ADJUSTMENT

HORIZONTAL DATUM:
ALL HORIZONTAL COORDINATES ARE BASED ON TEXAS STATE PLANE COORDINATE SYSTEM, SOUTH CENTRAL ZONE, NAD 83, 1993 ADJUSTMENT.

THE COORDINATES & DISTANCES SHOWN ARE SURFACE & MAY BE CONVERTED TO GRID BY MULTIPLYING BY A SCALE FACTOR OF 0.999877.

LEGEND :
- (B-XX) SURVEY BASELINE CONTROL POINT NUMBER
- SURVEY CONTROL POINT
- C.O.H. MONUMENT
- — — SURVEY BASELINE

No.	Date	Revisions	App.

SWTP Surface Water Transmission Program

Lockwood, Andrews & Newnam, Inc.
A LEO A DALY COMPANY
2925 Briarpark Drive Houston, TX 77042

STATE OF TEXAS — REGISTERED — SHAHEEN CHOWDHURY — 5858 — PROFESSIONAL LAND SURVEYOR

SURVEYED BY:
KUO & ASSOCIATES, INC.
C.O.H. Field Book P-5554

12/20/10

CITY OF HOUSTON
DEPARTMENT OF PUBLIC WORKS AND ENGINEERING

SWTP CONTRACT 74A-1

SURVEY CONTROL MAP

WBS NO.	S-000900-0109-4
DRAWING SCALE	H: 1"=100'
CITY OF HOUSTON PM	ARTHUR C. MORRIS, P.E.
SHEET NO. 6 OF 91	

PUBLIC WORKS AND ENGINEERING — ACCEPTED AND FILED — 48326 — CITY DRAWING NUMBER — HOUSTON, TEXAS

Dec 20, 2010 8:48pm
S:\Proj\2001010\Dgn\74-1\Dwgs\scm.dwg

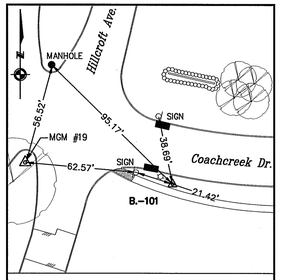

MGM #19 & T.B.M. B-101

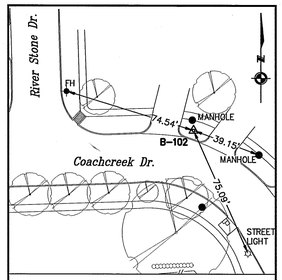

T.B.M. B-102

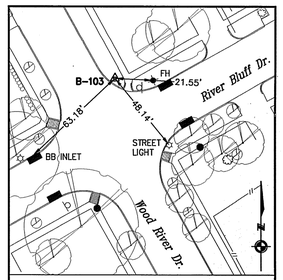

T.B.M. B-103

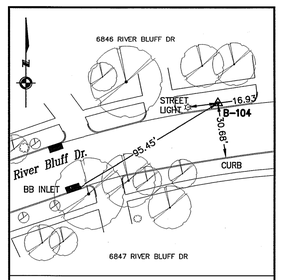

T.B.M. B-104

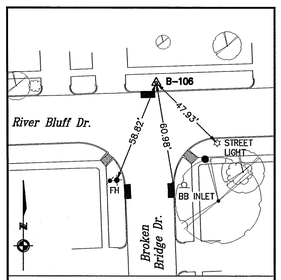

T.B.M. B-106

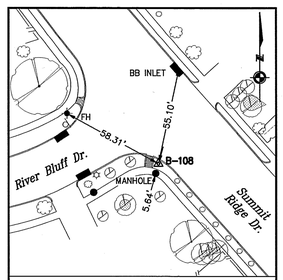

T.B.M. B-108

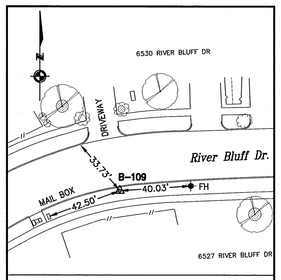

T.B.M. B-109

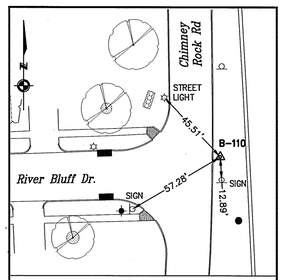

T.B.M. B-110

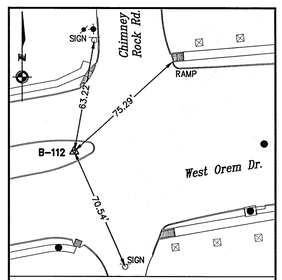

T.B.M. B-112

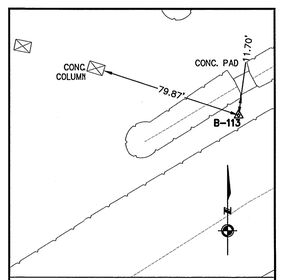

T.B.M. B-113

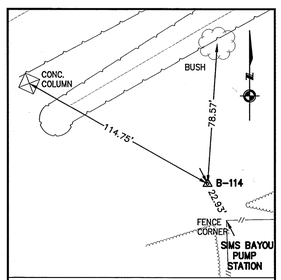

T.B.M. B-114

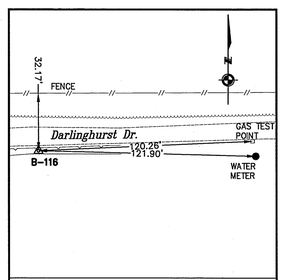

T.B.M. B-116

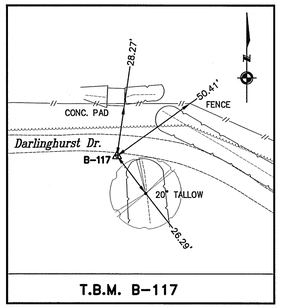

T.B.M. B-117

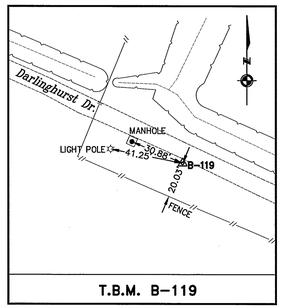

T.B.M. B-119

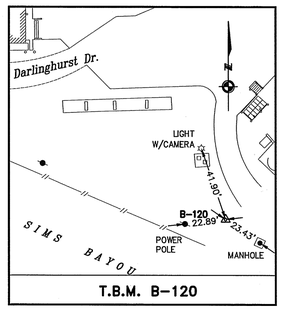

T.B.M. B-120

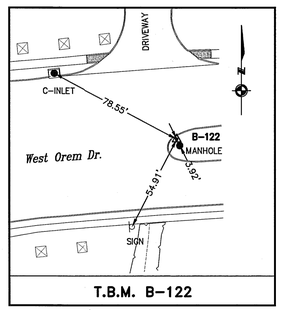

T.B.M. B-122

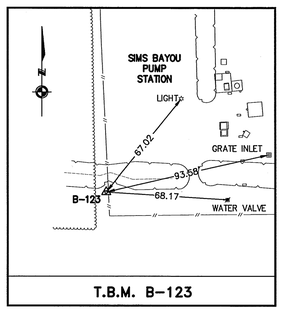

T.B.M. B-123

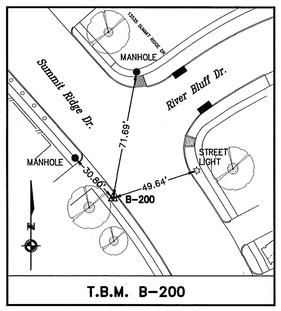

T.B.M. B-200

BENCHMARK:

CITY OF HOUSTON SURVEY MARKER 5151-7715, FLOODPLAIN REFERENCE MARK NUMBER 0301J0, A BRASS DISK STAMPED 0301J0 ON BRIDGE AT WEST OREM DRIVE (E-BOUND) AND SIMS BAYOU LOCATED ON DOWNSTREAM, SOUTH CONCRETE WALK, AT SE CORNER OF BRIDGE IN KEYMAP 571K IN THE SIMS WATERSHED NEAR STREAM C156-00-00.

ELEV. 60.47 FEET NAVD 1988, 2001 ADJUSTMENT

HORIZONTAL DATUM:

ALL HORIZONTAL COORDINATES ARE BASED ON TEXAS STATE PLANE COORDINATE SYSTEM, SOUTH CENTRAL ZONE, NAD 83, 1993 ADJUSTMENT.

THE COORDINATES & DISTANCES SHOWN ARE SURFACE & MAY BE CONVERTED TO GRID BY MULTIPLYING BY A SCALE FACTOR OF 0.999877.

EXIST. TOPOGRAPHIC LEGEND:

- MANHOLE
- GRATE INLET
- B/BB INLET
- FIRE HYDRANT
- TREE LINE
- STREET LIGHT
- SIGN
- POWER POLE
- DOWN GUY
- C-INLET
- TREE

No.	Revisions	Date	App'd

SWTP
Surface Water Transmission Program

Lockwood, Andrews & Newnam, Inc.
A LEO A DALY COMPANY
2925 Briarpark Drive Houston, TX 77042

STATE OF TEXAS REGISTERED SHAHEEN CHOWDHURY 5858 PROFESSIONAL LAND SURVEYOR
Shaheen Chowdhury 12/20/10

SURVEYED BY:
KUO & ASSOCIATES, INC.
C.O.H. Field Book P-5554

CITY OF HOUSTON
DEPARTMENT OF PUBLIC WORKS AND ENGINEERING

SWTP CONTRACT 74A-1

CONTROL MONUMENTS

WBS NO.
S-000900-0109-4

DRAWING SCALE
H: 1"=40'

CITY OF HOUSTON PM
ARTHUR C. MORRIS, P.E.

SHEET NO. 7 OF 91

PUBLIC WORKS AND ENGINEERING ACCEPTED AND FILED 48326 CITY DRAWING NUMBER HOUSTON, TEXAS

Dw 20 2010 0:37PM
Sv 20 2010 0:03PM (74-1)\Dwgs\swmstls.dwg

1FILE4

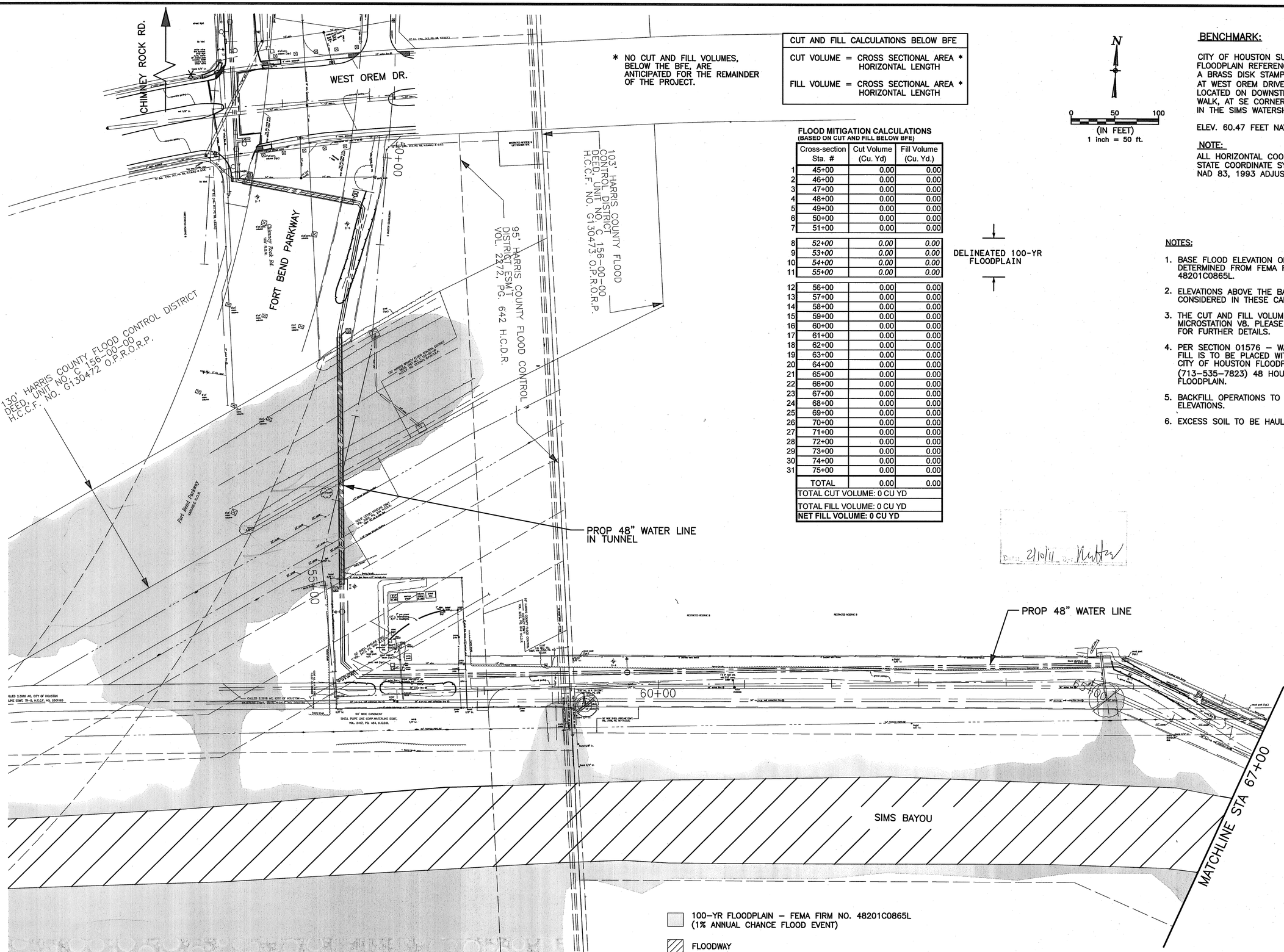

* NO CUT AND FILL VOLUMES, BELOW THE BFE, ARE ANTICIPATED FOR THE REMAINDER OF THE PROJECT.

CUT AND FILL CALCULATIONS BELOW BFE
CUT VOLUME = CROSS SECTIONAL AREA * HORIZONTAL LENGTH
FILL VOLUME = CROSS SECTIONAL AREA * HORIZONTAL LENGTH

FLOOD MITIGATION CALCULATIONS
(BASED ON CUT AND FILL BELOW BFE)

	Cross-section Sta. #	Cut Volume (Cu. Yd)	Fill Volume (Cu. Yd.)
1	45+00	0.00	0.00
2	46+00	0.00	0.00
3	47+00	0.00	0.00
4	48+00	0.00	0.00
5	49+00	0.00	0.00
6	50+00	0.00	0.00
7	51+00	0.00	0.00
8	*52+00*	*0.00*	*0.00*
9	*53+00*	*0.00*	*0.00*
10	*54+00*	*0.00*	*0.00*
11	*55+00*	*0.00*	*0.00*
12	56+00	0.00	0.00
13	57+00	0.00	0.00
14	58+00	0.00	0.00
15	59+00	0.00	0.00
16	60+00	0.00	0.00
17	61+00	0.00	0.00
18	62+00	0.00	0.00
19	63+00	0.00	0.00
20	64+00	0.00	0.00
21	65+00	0.00	0.00
22	66+00	0.00	0.00
23	67+00	0.00	0.00
24	68+00	0.00	0.00
25	69+00	0.00	0.00
26	70+00	0.00	0.00
27	71+00	0.00	0.00
28	72+00	0.00	0.00
29	73+00	0.00	0.00
30	74+00	0.00	0.00
31	75+00	0.00	0.00
	TOTAL	0.00	0.00
TOTAL CUT VOLUME: 0 CU YD			
TOTAL FILL VOLUME: 0 CU YD			
NET FILL VOLUME: 0 CU YD			

DELINEATED 100-YR FLOODPLAIN

N

0 50 100
(IN FEET)
1 inch = 50 ft.

BENCHMARK:

CITY OF HOUSTON SURVEY MARKER 5151-7715, FLOODPLAIN REFERENCE MARK NUMBER 30130, A BRASS DISK STAMPED 030130 ON BRIDGE AT WEST OREM DRIVE (E-BOUND) AND SIMS BAYOU LOCATED ON DOWNSTREAM, SOUTH CONCRETE WALK, AT SE CORNER OF BRIDGE IN KEYMAP 571-K IN THE SIMS WATERSHED NEAR STREAM C156-00-00

ELEV. 60.47 FEET NAVD 1988, 2001 ADJUSTMENT

NOTE:

ALL HORIZONTAL COORDINATES ARE BASED ON TEXAS STATE COORDINATE SYSTEM, SOUTH CENTRAL ZONE NAD 83, 1993 ADJUSTMENT.

NOTES:

1. BASE FLOOD ELEVATION OF 58.0 AND 100-YR FLOODPLAIN DETERMINED FROM FEMA FLOOD INSURANCE RATE MAP NO. 48201C0865L.
2. ELEVATIONS ABOVE THE BASE FLOOD ELEVATION WERE NOT CONSIDERED IN THESE CALCULATIONS.
3. THE CUT AND FILL VOLUMES WERE TABULATED USING MICROSTATION V8. PLEASE CONTACT THE PROJECT MANAGER FOR FURTHER DETAILS.
4. PER SECTION 01576 - WASTE MATERIAL DISPOSAL, NO FILL IS TO BE PLACED WITHIN THE FLOODPLAIN. CONTACT CITY OF HOUSTON FLOODPLAIN MANAGEMENT OFFICE (713-535-7823) 48 HOURS PRIOR TO ANY WORK WITHIN FLOODPLAIN.
5. BACKFILL OPERATIONS TO MATCH EXISTING GROUND ELEVATIONS.
6. EXCESS SOIL TO BE HAULED OFF OF PROJECT SITE.

Date 2/10/11

No.	Date	Revisions	App.

SWTP
Surface Water Transmission Program

Lockwood, Andrews & Newnam, Inc.
A LEO A DALY COMPANY
2925 Briarpark Drive Houston, TX 77042

SURVEYED BY:
KUO & ASSOCIATES, INC.
C.O.H. Field Book P-5554

STATE OF TEXAS
ALISA GRUBER
95685
LICENSED PROFESSIONAL ENGINEER
Lockwood, Andrews & Newnam, Inc
Firm No. 2614

CITY OF HOUSTON
DEPARTMENT OF PUBLIC WORKS AND ENGINEERING

SWTP CONTRACT 74A-1

FLOODPLAIN MITIGATION PLAN

SHEET 1 OF 2

WBS NO.	S-000900-0109-4
DRAWING SCALE	1"=50'
CITY OF HOUSTON PM	ARTHUR C. MORRIS, P.E.
SHEET NO.	8 OF 91

PUBLIC WORKS AND ENGINEERING
ACCEPTED AND FILED
48326
CITY DRAWING NUMBER
HOUSTON, TEXAS

12/28/2010

I:\130-1037-004\4-0-production\en\4-01-drawings\General\108-Floodplain Mitigation-01.dgn

4/20/53 PM

JTMURU

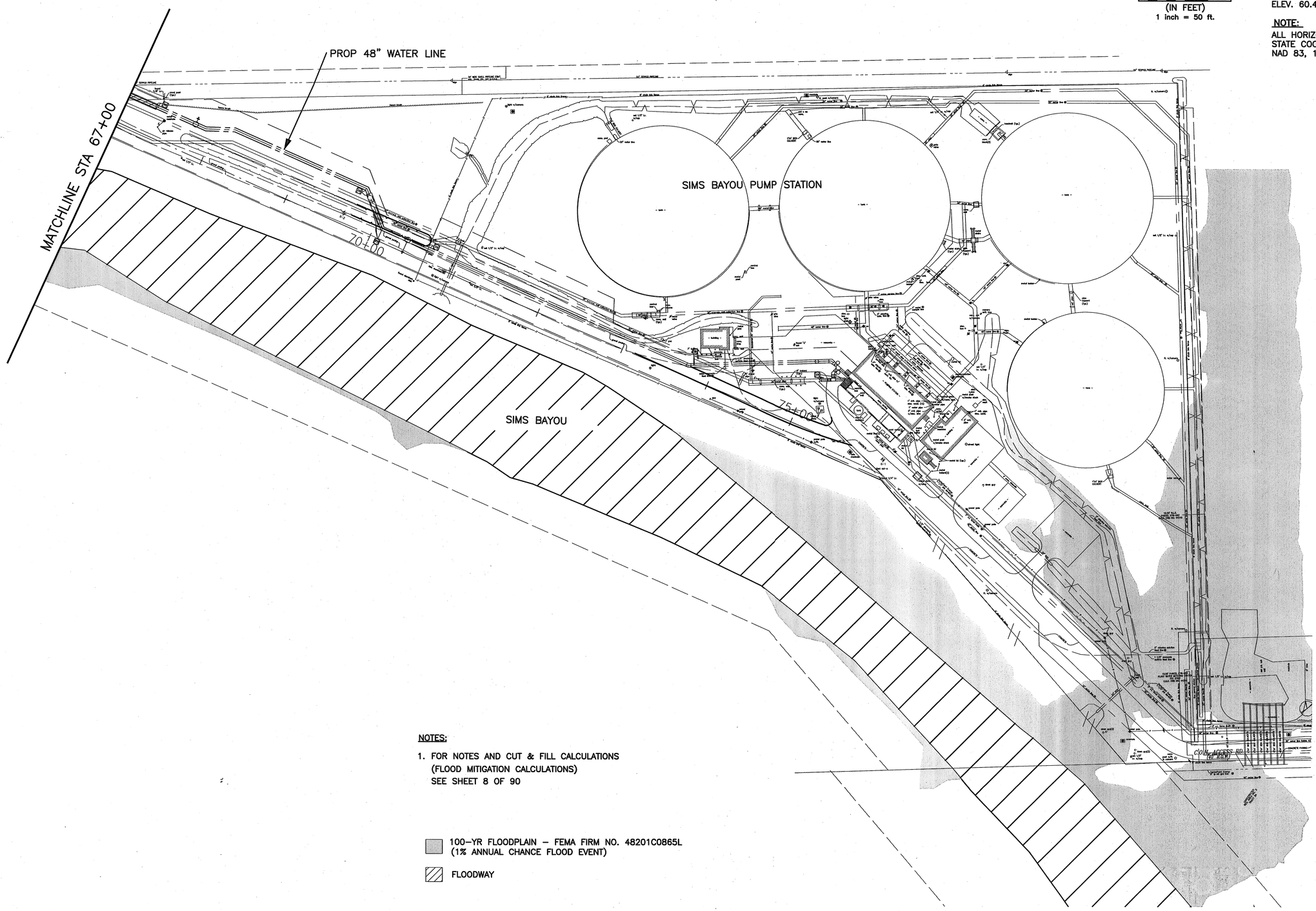

N

0 50 100
(IN FEET)
1 inch = 50 ft.

BENCHMARK:

CITY OF HOUSTON SURVEY MARKER 5151-7715, FLOODPLAIN REFERENCE MARK NUMBER 030130, A BRASS DISK STAMPED 030130 ON BRIDGE AT WEST OREM DRIVE (E-BOUND) AND SIMS BAYOU LOCATED ON DOWNSTREAM, SOUTH CONCRETE WALK, AT SE CORNER OF BRIDGE IN KEYMAP 571-K IN THE SIMS WATERSHED NEAR STREAM C156-00-00

ELEV. 60.47 FEET NAVD 1988, 2001 ADJUSTMENT

NOTE:

ALL HORIZONTAL COORDINATES ARE BASED ON TEXAS STATE COORDINATE SYSTEM, SOUTH CENTRAL ZONE NAD 83, 1993 ADJUSTMENT.

No.	Date	Revisions	App.

NOTES:

1. FOR NOTES AND CUT & FILL CALCULATIONS (FLOOD MITIGATION CALCULATIONS) SEE SHEET 8 OF 90

100-YR FLOODPLAIN – FEMA FIRM NO. 48201C0865L (1% ANNUAL CHANCE FLOOD EVENT)

FLOODWAY

SWTP
Surface Water Transmission Program

LAN
Lockwood, Andrews & Newnam, Inc.
A LEO A DALY COMPANY
2925 Briarpark Drive Houston, TX 77042

SURVEYED BY:
KUO & ASSOCIATES, INC.
C.O.H. Field Book P-5554

STATE OF TEXAS
ALISA GRUBER
95685
LICENSED PROFESSIONAL ENGINEER
1-3-11
Lockwood, Andrews & Newnam, Inc Firm No. 2614

CITY OF HOUSTON
DEPARTMENT OF PUBLIC WORKS AND ENGINEERING

SWTP CONTRACT 74A-1

FLOODPLAIN MITIGATION PLAN

SHEET 2 OF 2

WBS NO. S-000900-0109-4	
DRAWING SCALE	
1"=50'	
CITY OF HOUSTON PM	
ARTHUR C. MORRIS, P.E.	
SHEET NO. 9 OF 91	

PUBLIC WORKS AND ENGINEERING
ACCEPTED AND FILED
48326
CITY DRAWING NUMBER
HOUSTON, TEXAS

12/28/2010 4:28:55 PM jmuskru

I:\130\1037-004\4-0-design\ent\4-01-drawings\General\09-Floodplain Mitigation02.dgn

PROP 42" WATERLINE BY OTHERS
WBS NO. S-000900-0110-4
CONTRACT 74A-2

STA 2+08.15
FLUSH MOUNTED POTENTIAL
TEST STATION
SEE DETAIL 1, SHT 53

STA 2+23.00, 18.62'LT
1-42" BFV W/OPERATOR MH
SEE DETAIL 1, SHT 44

STA 2+43.00, 11.99'LT
1-ACCESS MANWAY
W/SERVICE MH
SEE DETAIL 4, SHT 46

CURVE No. 1 (℄ PROP 42" WL)
R=293.00'
D=32° 33' 50.75"
T=85.58'
L=166.52'
CH=164.29'

PC CURVE No. 2
STA 4+72.95, 20.03'LT

PT CURVE No. 1
STA 3+71.13, 3.86'LT

HILLCROFT AVE.

COACHCREEK DR.

EXIST ROW

SEE NOTE 1

LIMITS OF SAW CUT

PROP 42" WL

PC CURVE No. 1
STA 2+08.15, 24.61'LT

STA 2+08.15, 24.61' LT
1-42" INTERNAL ELLIPTICAL
DISHED HEAD PLUG
SEE DETAIL 5, SHT 42
SEE NOTE 2

LIMITS OF CONSTRUCTION

CRITICAL LOCATION
SEE SPEC 02317

MATCHLINE STA 5+00 SEE SHEET 11

N

0 20 40
(IN FEET)
1 inch = 20 ft.

BENCHMARK:

CITY OF HOUSTON SURVEY MARKER 5151-7715,
FLOODPLAIN REFERENCE MARK NUMBER 030130,
A BRASS DISK STAMPED 030130 AN BRIDGE
AT WEST OREM DRIVE (E-BOUND) AND SIMS BAYOU
LOCATED ON DOWNSTREAM, SOUTH CONCRETE
WALK, AT SE CORNER OF BRIDGE IN KEYMAP 571-K
IN THE SIMS WATERSHED NEAR STREAM C156-00-00

ELEV. 60.47 FEET NAVD 1988, 2001 ADJUSTMENT

NOTE:

ALL HORIZONTAL COORDINATES ARE BASED ON TEXAS STATE COORDINATE SYSTEM, SOUTH CENTRAL ZONE NAD 83, 1993 ADJUSTMENT.

T.B.M.-101
SET 5/8"I.R. W/CAP LOCATED AT SOUTHEAST
CORNER OF HILLCROFT AVE. AND COACHCREEK
DR. INTERSECTION
STA. 2+00
ELEV.=60.17'

NOTES:

1. REMOVE AND REPLACE 18 LF OF EXISTING 8"SAN SWR WITH PRESSURE RATED PIPE CENTERED ON 42"WATER LINE.
2. IF ADJACENT CONTRACT IS IN PLACE, CONNECT TO EXISTING PIPE WITH INSULATED PIPE ADAPTER, PROVIDE 2"THREADED OUTLET & FLUSH MOUNTED FLANGE ISOLATION TEST STATION. REMOVE INTERNAL ELLIPTICAL DISH HEAD PLUG AFTER HYDROSTATIC TESTING.
3. ADJUST EXIST WATER VALVE/METER BOXES TO NEW GRADE. REPLACE ALL MISSING OR DAMAGED WATER VALVE/METER BOXES AND COVERS.
4. ⟨XX⟩ DRIVEWAY IDENTIFICATION

No.	Date	Revisions	App.

STA 2+23.00
1-42" BFV W/OPERATOR MH
SEE DETAIL 1, SHT 44

STA 2+43.00
1-ACCESS MANWAY
W/SERVICE MH
SEE DETAIL 4, SHT 46

LIMITS WELDED RESTRAINED JOINTS
STA 2+08 TO STA 3+77

VPI STA = 1+90.00
EL = 59.90'

VPI STA = 1+84.39
EL = 59.94'

-0.5961% (N)

+0.3056% (N)

VPI STA = 3+70.00
EL = 60.45'

+0.3056% (N) -0.5107% (N)

PROP N-TOC

18" stm.

27" stm.(s)

27" stm.(n)

SBC 10-4" DUCTS Ⓣ

30" water Ⓦ

Houston Pipe Line Company Westberry 6" hpl gas line (south side)

Houston Pipe Line Company Westberry 6" hpl gas line (north side)

8" water Ⓦ

6" san.

6" f.h. lead

PROP 8" SAN SWR

8" san.

8" san.(sw)

1' MIN CLR

2' MIN CLR

STA 2+08.15 (℄ COACHCREEK DR.)
INV EL = 48.10
1-42" INTERNAL ELLIPTICAL
DISHED HEAD PLUG
SEE DETAIL 5, SHT 42

12" san.(n)

12" san.(s)

PROP 42" WL

FLOW

S=0.00%

S=(+)5.50%

CENTER ONE FULL SECTION OF PROP 42" WATER LINE W/ RESTRAINED JOINTS UNDER SANITARY SEWER

60.06 (N)

60.22 (N)

60.39 (N)

60.30 (N)

STA 4+94.97
VPI EL=48.10

STA 5+00.00
(℄ COACHCREEK DR.)
INV EL=47.82

60.04 (N)

59.78 (N)

59.93 (N)

1+00 2+00 3+00 4+00 5+00

62 60 58 56 54 52 50 48 46 44

NOTICE:

AT LEAST 48 HOURS BEFORE EXCAVATION IN STREET R.O.W. OR EASEMENTS CALL THE LONE STAR NOTIFICATION 713-223-4567

PRIVATE UTILITY LINES SHOWN

CENTERPOINT ENERGY/ELECTRIC FACILITIES — Date: 1-6-11
(APPROVED ONLY FOR CROSSING UNDERGROUND DUCTLINES UNLESS OTHERWISE NOTED.) VALID AT TIME OF REVIEW ONLY.

CENTERPOINT ENERGY/GAS FACILITIES — Date: 1-6-11
(GAS SERVICE LINES ARE NOT SHOWN)

Approved for AT&T Texas/SBC underground conduit facilities only. — Date: 1-6-11
SIGNATURE VALID FOR ONE YEAR

CABLE COMPANY — Date:
SIGNATURE VALID FOR ONE YEAR

Lockwood, Andrews & Newnam, Inc.
A LEO A DALY COMPANY
2925 Briarpark Drive Houston, TX 77042

SURVEYED BY:
KUO & ASSOCIATES, INC.
C.O.H. Field Book P-5554

STATE OF TEXAS
ALISA GRUBER
95685
LICENSED PROFESSIONAL ENGINEER
Lockwood, Andrews & Newnam, Inc. Firm No. 2614

CITY OF HOUSTON
DEPARTMENT OF PUBLIC WORKS AND ENGINEERING

SWTP CONTRACT 74A-1

PLAN & PROFILE
WATER LINE
STA 1+16.42 TO STA 5+00

SHEET 1 OF 25

WBS NO.
S-000900-0109-4

DRAWING SCALE
V: 1"=2' H: 1"=20'

CITY OF HOUSTON PM
ARTHUR C. MORRIS, P.E.

SHEET NO. 10 OF 91

ACCEPTED AND FILED
48326
CITY DRAWING NO.
HOUSTON, TEXAS

Surface Water Transmission Program

jmsuku 4:24:59 PM 12/28/2010

L:\130-10327-004\4-0-Production\04-01-Draw\Sgk\01\W\10327-4-PP-ML-01.dgn

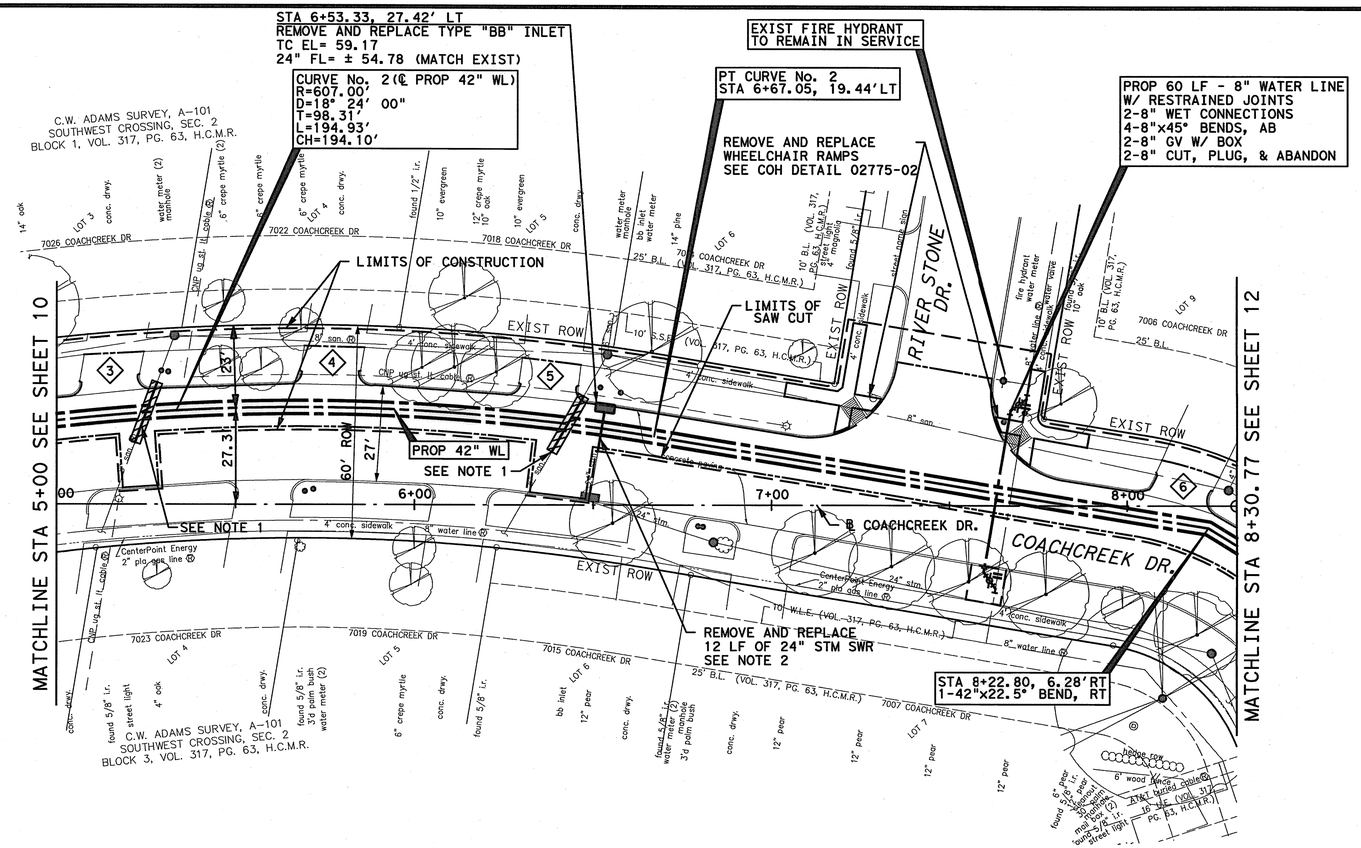

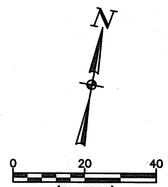

BENCHMARK:

CITY OF HOUSTON SURVEY MARKER 5151-7715, FLOODPLAIN REFERENCE MARK NUMBER 030130, A BRASS DISK STAMPED 030130 AN BRIDGE AT WEST OREM DRIVE (E-BOUND) AND SIMS BAYOU LOCATED ON DOWNSTREAM, SOUTH CONCRETE WALK, AT SE CORNER OF BRIDGE IN KEYMAP 571-K IN THE SIMS WATERSHED NEAR STREAM C156-00-00

ELEV. 60.47 FEET NAVD 1988, 2001 ADJUSTMENT

NOTE:

ALL HORIZONTAL COORDINATES ARE BASED ON TEXAS STATE COORDINATE SYSTEM, SOUTH CENTRAL ZONE NAD 83, 1993 ADJUSTMENT.

T.B.M.-102
SET ⅝" I.R. W/CAP LOCATED ON NORTH SIDE OF COACHCREEK DR. APPROX. 125' WEST OF RIVER STONE DR.
STA. 8+30.77
ELEV. =59.25'

NOTES:

1. REMOVE AND REPLACE 18 LF OF EXISTING 8" SAN SWR WITH PRESSURE RATED PIPE CENTERED ON 42" WATER LINE
2. MATCH EXISTING FLOWLINE ELEVATION SEE DETAIL 2, SHEET 46
3. ADJUST EXIST WATER VALVE/METER BOXES TO NEW GRADE. REPLACE ALL MISSING OR DAMAGED WATER VALVE/METER BOXES AND COVERS.
4. ◇XX◇ DRIVEWAY IDENTIFICATION

No.	Date	Revisions	App.

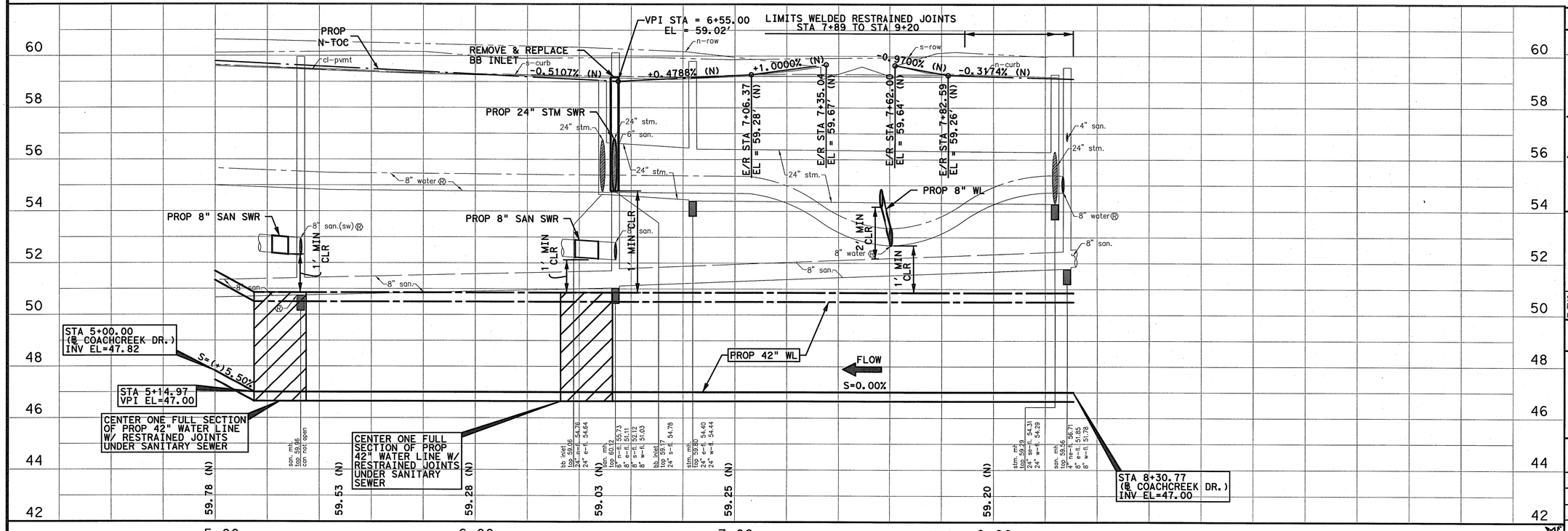

SWTP
Surface Water Transmission Program

NOTICE:
AT LEAST 48 HOURS BEFORE EXCAVATION IN STREET R.O.W. OR EASEMENTS CALL THE LONE STAR NOTIFICATION 713-223-4567

PRIVATE UTILITY LINES SHOWN

CENTERPOINT ENERGY/ELECTRIC FACILITIES
(APPROVED ONLY FOR CROSSING UNDERGROUND DUCTLINES UNLESS OTHERWISE NOTED.) VALID AT TIME OF REVIEW ONLY.
Date: 1-6-11

CENTERPOINT ENERGY/GAS FACILITIES
(GAS SERVICE LINES ARE NOT SHOWN)
Date: 1-6-11

Approved for AT&T Texas/SBC underground conduit facilities only.
SIGNATURE VALID FOR ONE YEAR
Date:

CABLE COMPANY
SIGNATURE VALID FOR ONE YEAR

Lockwood, Andrews & Newnam, Inc.
A LEO A DALY COMPANY
2925 Briarpark Drive Houston, TX 77042

SURVEYED BY:
KUO & ASSOCIATES, INC.
C.O.H. Field Book P-5554

STATE OF TEXAS
ALISA GRUBER
95685
LICENSED PROFESSIONAL ENGINEER
Lockwood, Andrews & Newnam, Inc
Firm No. 2614

CITY OF HOUSTON
DEPARTMENT OF PUBLIC WORKS AND ENGINEERING

SWTP CONTRACT 74A-1

PLAN & PROFILE
WATER LINE
STA 5+00 TO STA 8+30.77

SHEET 2 OF 25

WBS NO.	S-000900-0109-4
DRAWING SCALE	
V: 1"=2'	H: 1"=20'
CITY OF HOUSTON PM	ARTHUR C. MORRIS, P.E.
SHEET NO.	11 OF 91

PUBLIC WORKS AND ENGINEERING
ACCEPTED AND FILED
48326
CITY DRAWING NUMBER
HOUSTON, TEXAS

12/28/2010 4:24:52 PM jmusiku
L:\130-10337-004\4-0-Production\4-01-Drawings\C1v\110337-4-PP-ML-02.dgn

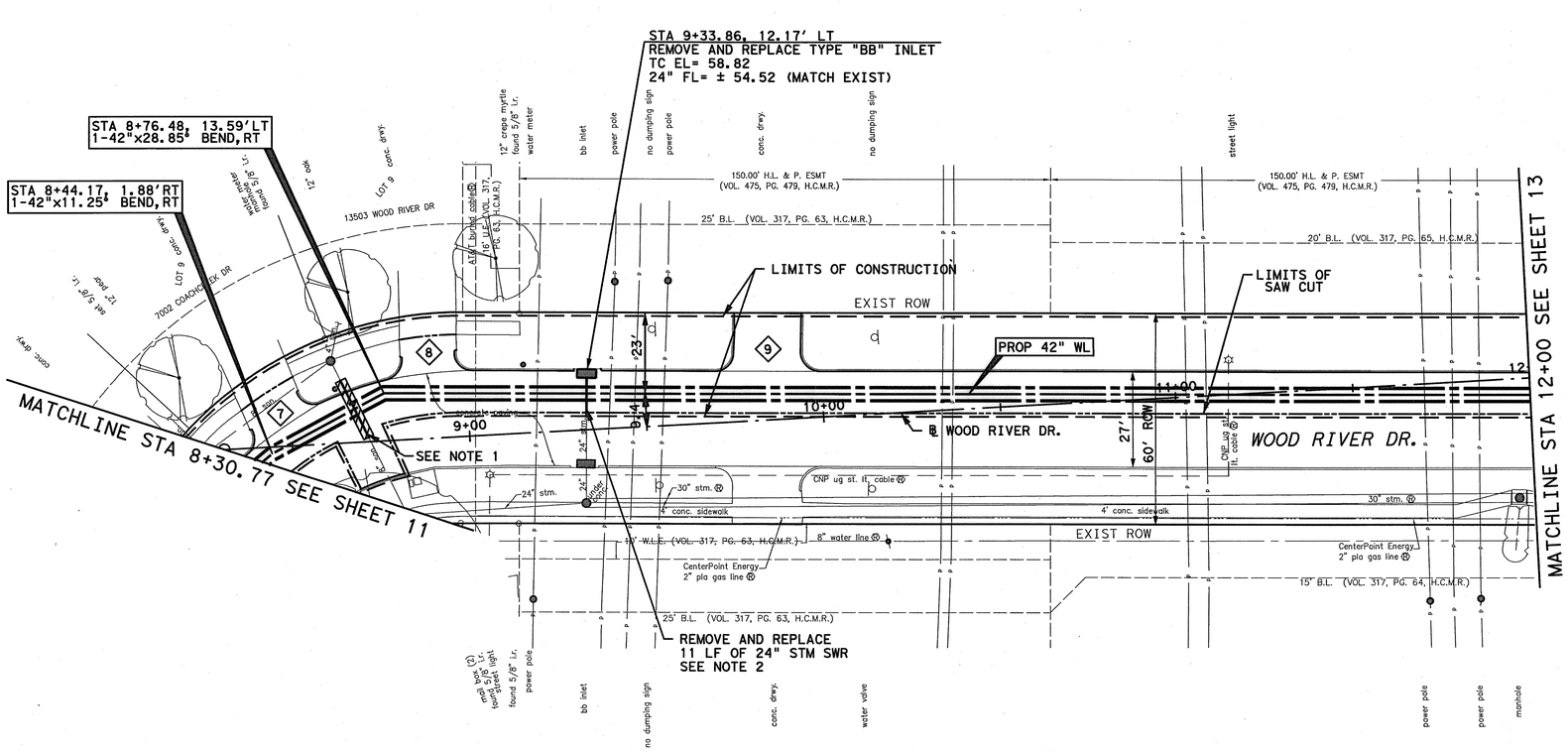

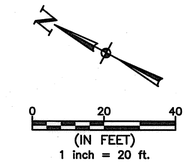

BENCHMARK:

CITY OF HOUSTON SURVEY MARKER 5151-7715, FLOODPLAIN REFERENCE MARK NUMBER 030130, A BRASS DISK STAMPED 030130 AN BRIDGE AT WEST OREM DRIVE (E-BOUND) AND SIMS BAYOU LOCATED ON DOWNSTREAM, SOUTH CONCRETE WALK, AT SE CORNER OF BRIDGE IN KEYMAP 571-K IN THE SIMS WATERSHED NEAR STREAM C156-00-00

ELEV. 60.47 FEET NAVD 1988, 2001 ADJUSTMENT

NOTE:

ALL HORIZONTAL COORDINATES ARE BASED ON TEXAS STATE COORDINATE SYSTEM, SOUTH CENTRAL ZONE NAD 83, 1993 ADJUSTMENT.

T.B.M.-102
SET 5/8" I.R. W/CAP LOCATED ON NORTH SIDE OF COACHCREEK DR. APPROX. 125' WEST OF RIVER STONE DR.
STA. 8+30.77
ELEV. =59.25'

NOTES:

1. REMOVE AND REPLACE 18 LF OF EXISTING 8" SAN SWR WITH PRESSURE RATED PIPE CENTERED ON 42" WATER LINE
2. MATCH EXISTING FLOWLINE ELEVATION SEE DETAIL 2, SHEET 46
3. ADJUST EXIST WATER VALVE/METER BOXES TO NEW GRADE. REPLACE ALL MISSING OR DAMAGED WATER VALVE/METER BOXES AND COVERS.
4. XX DRIVEWAY IDENTIFICATION

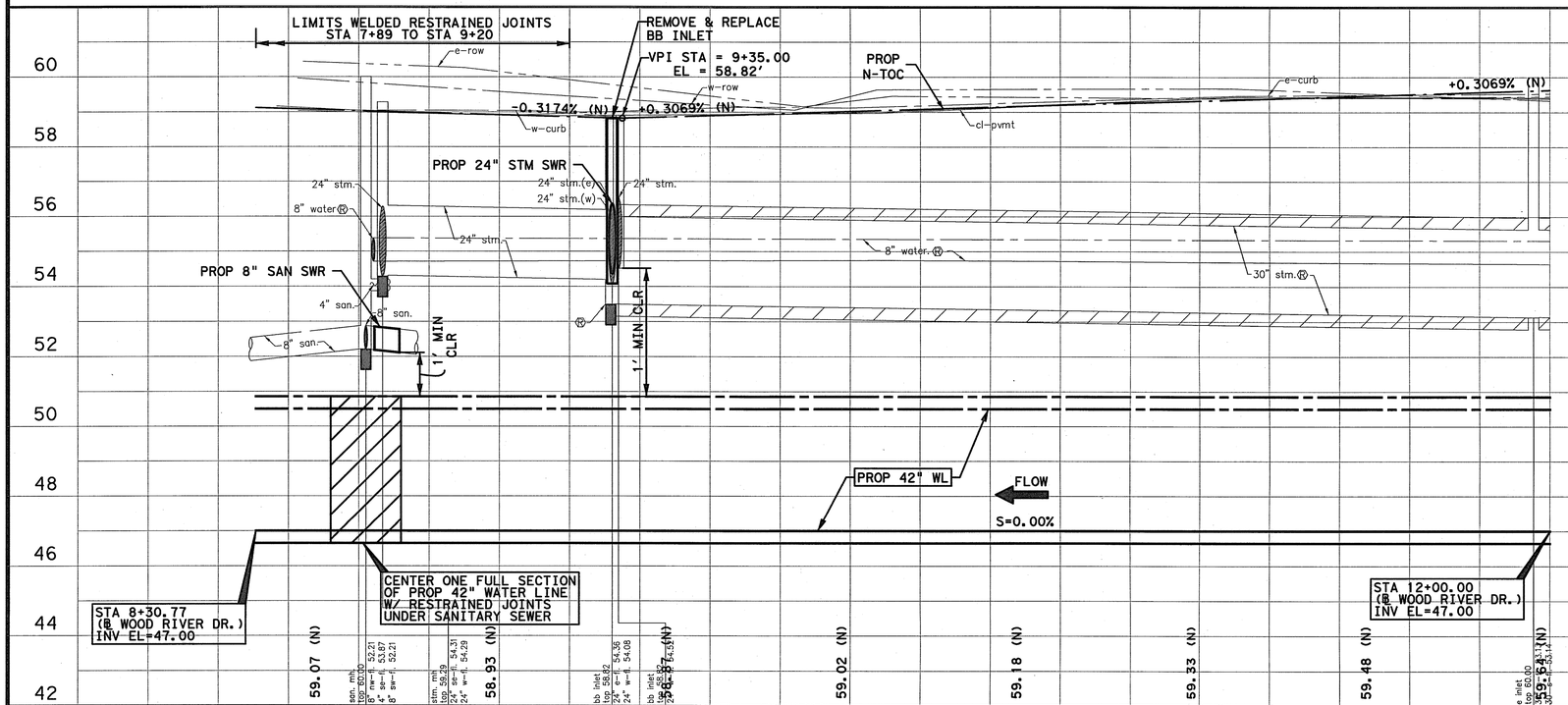

SWTP
Surface Water Transmission Program

NOTICE:
AT LEAST 48 HOURS BEFORE EXCAVATION IN STREET R.O.W. OR EASEMENTS CALL THE LONE STAR NOTIFICATION 713-223-4567

PRIVATE UTILITY LINES SHOWN

Date: 1-6-11
CENTERPOINT ENERGY/ELECTRIC FACILITIES
(APPROVED ONLY FOR CROSSING UNDERGROUND DUCTLINES UNLESS OTHERWISE NOTED.) VALID AT TIME OF REVIEW ONLY.

Date: 1-6-11
CENTERPOINT ENERGY/GAS FACILITIES
(GAS SERVICE LINES ARE NOT SHOWN)

Date: 1-6-11
Approved for AT&T Texas/SBC underground conduit facilities only.
SIGNATURE VALID FOR ONE YEAR

Date:
CABLE COMPANY
SIGNATURE VALID FOR ONE YEAR

Lockwood, Andrews & Newnam, Inc.
A LEO A DALY COMPANY
2925 Briarpark Drive Houston, TX 77042

SURVEYED BY:
KUO & ASSOCIATES, INC.
C.O.H. Field Book P-5554

1-3-11
STATE OF TEXAS
ALISA GRUBER
95685
LICENSED PROFESSIONAL ENGINEER
Lockwood, Andrews & Newnam, Inc Firm No. 2614

CITY OF HOUSTON
DEPARTMENT OF PUBLIC WORKS AND ENGINEERING

SWTP CONTRACT 74A-1

PLAN & PROFILE
WATER LINE
STA 8+30.77 TO STA 12+00

SHEET 3 OF 25

WBS NO.	S-000900-0109-4
DRAWING SCALE	
V: 1"=2'	H: 1"=20'
CITY OF HOUSTON PM	ARTHUR C. MORRIS, P.E.
SHEET NO.	12 OF 91

ACCEPTED AND FILED
48326
CITY DRAWING NO.

No.	Date	Revisions	App.

12/28/2010 4:24:53 PM jmusiku

L:\1358-1037-004\4-0-Product\enV-01-Drawings\Civil\1037-4-PP-WL-03.dgn

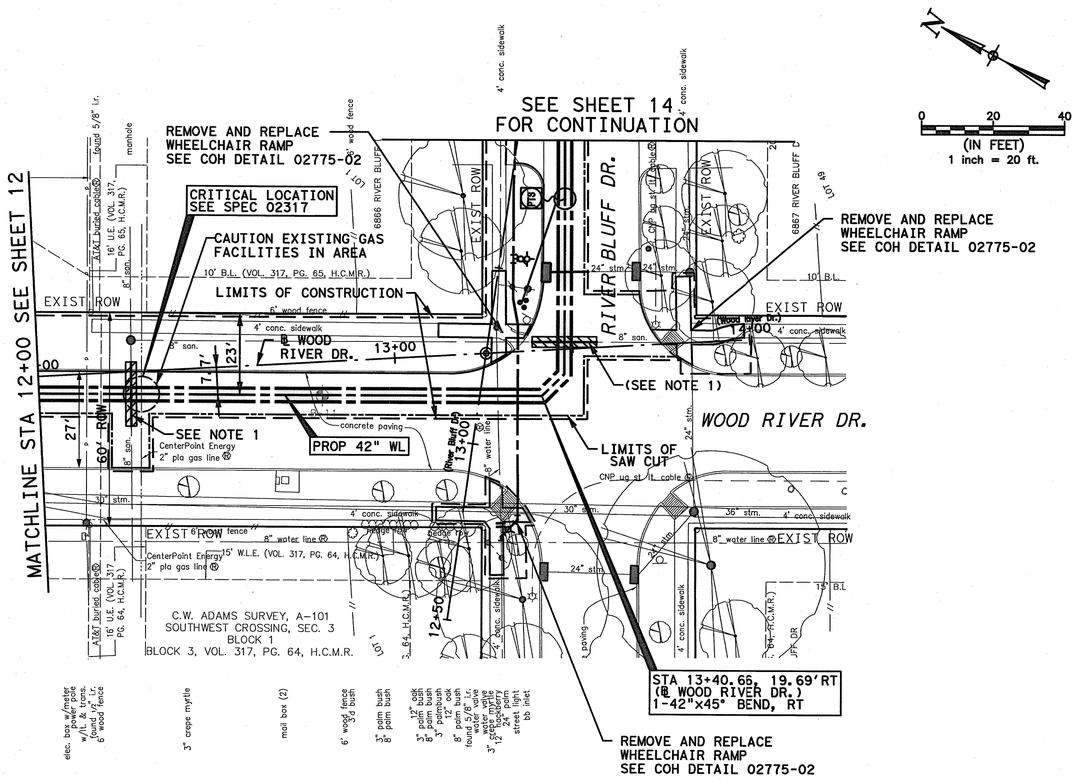

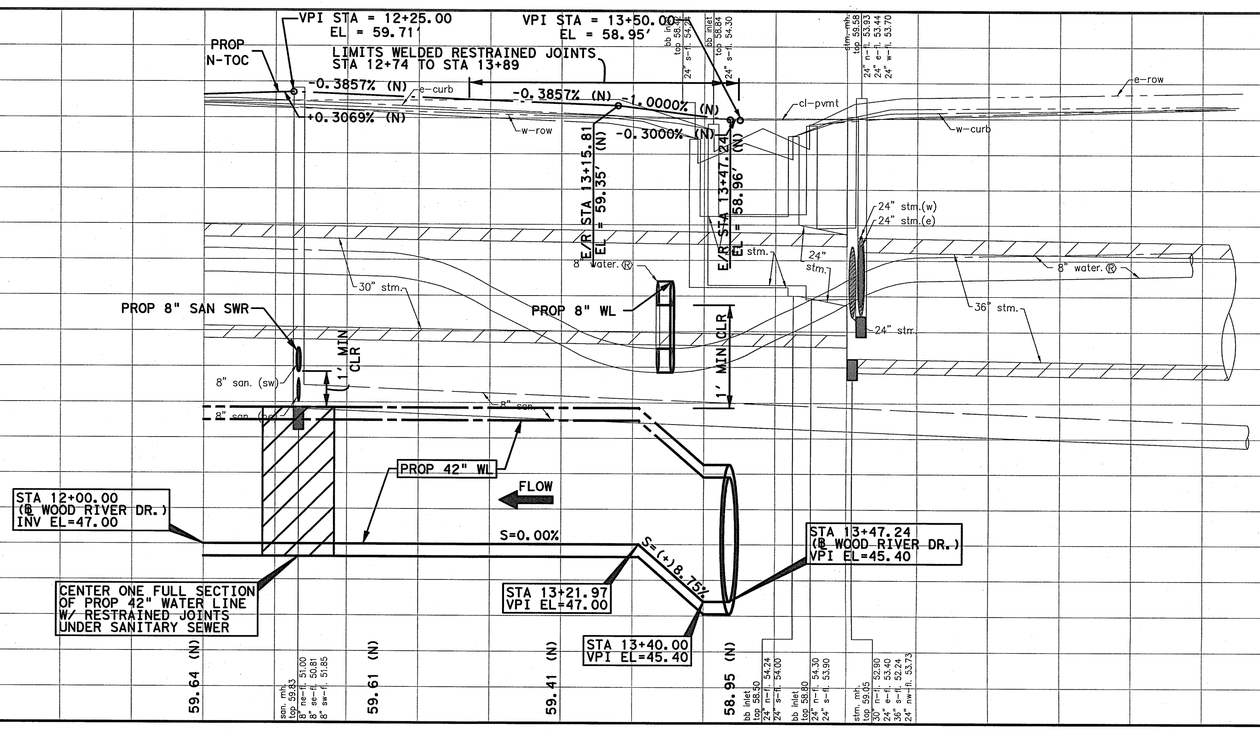

BENCHMARK:

CITY OF HOUSTON SURVEY MARKER 5151-7715,
FLOODPLAIN REFERENCE MARK NUMBER 030130,
A BRASS DISK STAMPED 030130 AN BRIDGE
AT WEST OREM DRIVE (E-BOUND) AND SIMS BAYOU
LOCATED ON DOWNSTREAM, SOUTH CONCRETE
WALK, AT SE CORNER OF BRIDGE IN KEYMAP 571-K
IN THE SIMS WATERSHED NEAR STREAM C156-00-00

ELEV. 60.47 FEET NAVD 1988, 2001 ADJUSTMENT

NOTE:

ALL HORIZONTAL COORDINATES ARE BASED ON TEXAS STATE COORDINATE SYSTEM, SOUTH CENTRAL ZONE NAD 83, 1993 ADJUSTMENT.

T.B.M.-103
SET 5/8" I.R. W/CAP LOCATED ON NORTHEAST
CORNER OF WOOD RIVER DR. AND RIVER BLUFF
DR. INTERSECTION
STA. 13+25.73
ELEV. =58.51'

NOTES:

1. REMOVE AND REPLACE 18 LF OF EXISTING 8" SAN SWR WITH PRESSURE RATED PIPE CENTERED ON 42" WATER LINE
2. ADJUST EXIST WATER VALVE/METER BOXES TO NEW GRADE. REPLACE ALL MISSING OR DAMAGED WATER VALVE/METER BOXES AND COVERS.

No.	Date	Revisions	Appd.

SWTP
Surface Water Transmission Program

NOTICE:
AT LEAST 48 HOURS BEFORE EXCAVATION IN STREET R.O.W. OR EASEMENTS CALL THE LONE STAR NOTIFICATION 713-223-4567

PRIVATE UTILITY LINES SHOWN

CENTERPOINT ENERGY/ELECTRIC FACILITIES Date: 1-6-11
(APPROVED ONLY FOR CROSSING UNDERGROUND DUCTLINES UNLESS OTHERWISE NOTED.) VALID AT TIME OF REVIEW ONLY.

CENTERPOINT ENERGY/GAS FACILITIES Date: 1-6-11
(GAS SERVICE LINES ARE NOT SHOWN)

Approved for AT&T Texas/SBC underground conduit facilities only. Date: 1-6-11
SIGNATURE VALID FOR ONE YEAR

CABLE COMPANY Date:
SIGNATURE VALID FOR ONE YEAR

Lockwood, Andrews & Newnam, Inc.
A LEO A DALY COMPANY
2925 Briarpark Drive Houston, TX 77042

SURVEYED BY:
KUO & ASSOCIATES, INC.
C.O.H. Field Book P-5554

1-3-11
STATE OF TEXAS
ALISA GRUBER
95685
LICENSED PROFESSIONAL ENGINEER
Lockwood, Andrews & Newnam, Inc.
Firm No. 2614

CITY OF HOUSTON
DEPARTMENT OF PUBLIC WORKS AND ENGINEERING

SWTP CONTRACT 74A-1

PLAN & PROFILE
WATER LINE
STA 12+00 TO STA 13+25.73

SHEET 4 OF 25

WBS NO.	S-000900-0109-4
DRAWING SCALE	V: 1"=2' H: 1"=20'
CITY OF HOUSTON PM	
ARTHUR C. MORRIS, P.E.	
SHEET NO.	13 OF 91

ALL BIDS ARE ENGINEER'S ESTIMATE ONLY
ACCEPTED AND FILED
48326
CITY DRAWING NUMBER
HOUSTON TEXAS

12/28/2010 4:24:54 PM jmusiau
L:\130-10337-004\4-0-Product\arch\01-Drawings\Civil\10337-4-PP-WL-04.dgn

STA 13+72.00, 15.44'RT
1-3" AI/VR VALVE, VENT PIPING W/
3-BOLLARDS AND ACCESS
MANWAY W/SERVICE MH
SEE DETAIL 5, SHT 45

STA 13+53.15, 3.65' RT
1-8"x6" TEE, AB
1-6" GV W/ BOX
1-F.H. ASSEMBLY, 3'BC

STA 13+50.75, 13.26' RT
REMOVE AND REPLACE TYPE "BB" INLET
TC EL= 58.84
24" FL= ± 54.30 (MATCH EXIST)

1-8" WET CONNECTION
1-8" GV W/BOX
2-8"x45° BEND, AB
1-8" CUT, PLUG, & ABANDON

STA 13+72.00, 15.44'RT
FLUSH MOUNTED POTENTIAL
TEST STATION
SEE DETAIL 1, SHT 53

PC CURVE No. 3
STA 14+85.59, 0.87'LT

CURVE No.3 (℄ PROP 42" WL)
R=577.00'
D=27° 21' 00"
T=140.39'
L=275.43'
CH=272.82'

STA 16+06.19, 10.53' LT
REMOVE AND REPLACE TYPE "BB" INLET
TC EL= 58.56
24" FL= ± 54.14 (MATCH EXIST)

SEE SHEET 13
FOR CONTINUATION

SEE NOTE 2

PROP 8" WL
(TRENCHLESS CONSTRUCTION)

LIMITS OF CONSTRUCTION

LIMITS OF
SAW CUT

ABANDON EXIST 8" WL
& TRANSFER SERVICE
CONNECTIONS TO
PROP 8" WL

MATCHLINE STA 17+00 SEE SHEET 15

STA 13+23.16, 22.61'LT
(@ RIVER BLUFF DR.)
1-42"x45° BEND, LT

SEE NOTE 1

PROP 42" WL

REMOVE AND REPLACE
11 LF OF 24" STM SWR
SEE NOTE 3

REMOVE AND REPLACE
11 LF OF 24" STM SWR
SEE NOTE 3

REMOVE & SALVAGE
EXIST FIRE HYDRANT

REMOVE & REPLACE
BB INLET

EXIST ROW

RIVER BLUFF DR.

WOOD RIVER DR.

6854 RIVER BLUFF DR
6862 RIVER BLUFF DR
6858 RIVER BLUFF DR
6850 RIVER BLUFF DR
6846 RIVER BLUFF DR
6867 RIVER BLUFF DR
6863 RIVER BLUFF DR
6859 RIVER BLUFF DR
6851 RIVER BLUFF DR
6847 RIVER BLUFF DR
6843 RIVER BLUFF DR
6718 RIVER BLUFF DR

C.W. ADAMS SURVEY, A-101
SOUTHWEST CROSSING, SEC. 4
LOT 2 BLOCK 3, VOL. 317, PG. 65, H.C.M.R.

20' B.L. (VOL. 317, PG. 65, H.C.M.R.)

6' wood fence

N
0 20 40
(IN FEET)
1 inch = 20 ft.

BENCHMARK:

CITY OF HOUSTON SURVEY MARKER 5151-7715,
FLOODPLAIN REFERENCE MARK NUMBER 030130,
A BRASS DISK STAMPED 030130 AN BRIDGE
AT WEST OREM DRIVE (E-BOUND) AND SIMS BAYOU
LOCATED ON DOWNSTREAM, SOUTH CONCRETE
WALK, AT SE CORNER OF BRIDGE IN KEYMAP 571-K
IN THE SIMS WATERSHED NEAR STREAM C156-00-00

ELEV. 60.47 FEET NAVD 1988, **2001 ADJUSTMENT**

NOTE:

ALL HORIZONTAL COORDINATES ARE BASED ON TEXAS STATE COORDINATE SYSTEM, SOUTH CENTRAL ZONE NAD 83, 1993 ADJUSTMENT.

T.B.M.-103
SET ⅝" I.R. W/CAP LOCATED ON NORTHEAST
CORNER OF WOOD RIVER DR. AND RIVER BLUFF
DR. INTERSECTION
STA. 13+25.73
ELEV. =58.51'

NOTES:

1. REMOVE AND REPLACE 18 LF OF EXISTING 8" SAN SWR WITH PRESSURE RATED PIPE CENTERED ON 42" WATER LINE
2. CAUTION - EXIST 8" AC WL IN CLOSE PROXIMITY TO PROP 8" WL MAY LEAK. NO SEPARATE PAYMENT FOR GROUND WATER CONTROL RESULTING FROM LEAKING JOINTS. AVOID DISTURBING EXIST 8" AC LINE.
3. MATCH EXISTING FLOWLINE ELEVATION SEE DETAIL 2, SHEET 46
4. ADJUST EXIST WATER VALVE/METER BOXES TO NEW GRADE. REPLACE ALL MISSING OR DAMAGED WATER VALVE/METER BOXES AND COVERS.
5. ⟨XX⟩ DRIVEWAY IDENTIFICATION

REMOVE & REPLACE
BB INLET

VPI STA = 13+50.00
EL = 58.95'

STA 13+72.00
1-3" AI/VR VALVE AND ACCESS
MANWAY W/SERVICE MH
SEE DETAIL 5, SHT 45

VPI STA = 14+35.00
EL = 59.37'

PROP
N-TOC

VPI STA = 16+05.00
EL = 58.52'

REMOVE & REPLACE
BB INLET

-1.0000% (N)
+0.4828% (N)
-0.3000% (N)
-0.5090% (N)
+0.3003% (N)
-0.5090% (N)

LIMITS WELDED RESTRAINED JOINTS
STA 12+74 TO STA 13+89

PROP 24" STM SWR

PROP 8" WL
(TRENCHLESS CONSTRUCTION)

PROP 24" STM SWR

4' MIN COVER

1' MIN CLR

PROP 6" FH LEAD

PROP 8" WL

PROP 8"
SAN SWR

FOR VERTICAL PIPE OFFSET
SEE COH 02511-01, SHT 49

CENTER ONE FULL SECTION
OF PROP 42" WATER LINE
W/ RESTRAINED JOINTS
UNDER SANITARY SEWER

PROP 42" WL

FLOW
S=0.00%

S=(-)8.75%

S=0.00%

STA 13+16.10
(@ RIVER BLUFF DR.)
INV EL=45.40

STA 13+67.06
VPI EL=47.50

STA 13+43.06
VPI EL=45.40

STA 17+00.00
(@ RIVER BLUFF DR.)
INV EL=47.50

13+00 14+00 15+00 16+00 17+00

SWTP
Surface Water Transmission Program

NOTICE:
AT LEAST 48 HOURS BEFORE EXCAVATION IN STREET R.O.W. OR EASEMENTS CALL THE LONE STAR NOTIFICATION 713-223-4567

PRIVATE UTILITY LINES SHOWN

CENTERPOINT ENERGY/ELECTRIC FACILITIES Date: 1-6-11
(APPROVED ONLY FOR CROSSING UNDERGROUND DUCTLINES UNLESS OTHERWISE NOTED.) VALID AT TIME OF REVIEW ONLY.

CENTERPOINT ENERGY/GAS FACILITIES Date: 1-6-11
(GAS SERVICE LINES ARE NOT SHOWN)

Approved for AT&T Texas/SBC underground conduit facilities only. Date: 1-6-11
SIGNATURE VALID FOR ONE YEAR

CABLE COMPANY Date:
SIGNATURE VALID FOR ONE YEAR

Lockwood, Andrews & Newnam, Inc.
A LEO A DALY COMPANY
2925 Briarpark Drive Houston, TX 77042

SURVEYED BY:
KUO & ASSOCIATES, INC.
C.O.H. Field Book P-5554

STATE OF TEXAS
ALISA GRUBER
95685
LICENSED
PROFESSIONAL ENGINEER
1-6-11
Lockwood, Andrews & Newnam, Inc.
Firm No. 2614

CITY OF HOUSTON
DEPARTMENT OF PUBLIC WORKS AND ENGINEERING

SWTP CONTRACT 74A-1

PLAN & PROFILE
WATER LINE
STA 13+25.73 TO STA 17+00

SHEET 5 OF 25

WBS NO.	S-000900-0109-4
DRAWING SCALE	
V: 1"=2' H: 1"=20'	
CITY OF HOUSTON PM	
ARTHUR C. MORRIS, P.E.	
SHEET NO. 14 OF 91	

PUBLIC WORKS AND ENGINEERING
ACCEPTED AND FILED
48326
CITY DRAWING NO.
HOUSTON, TEXAS

No.	Date	Revisions	Appr.

12/28/2010 4:24:55 PM jmusiku

L:\1310-10337-004\4-0-Production\4-01-Drawings\C1\r1\10337-4-PP-WL-05.dgn

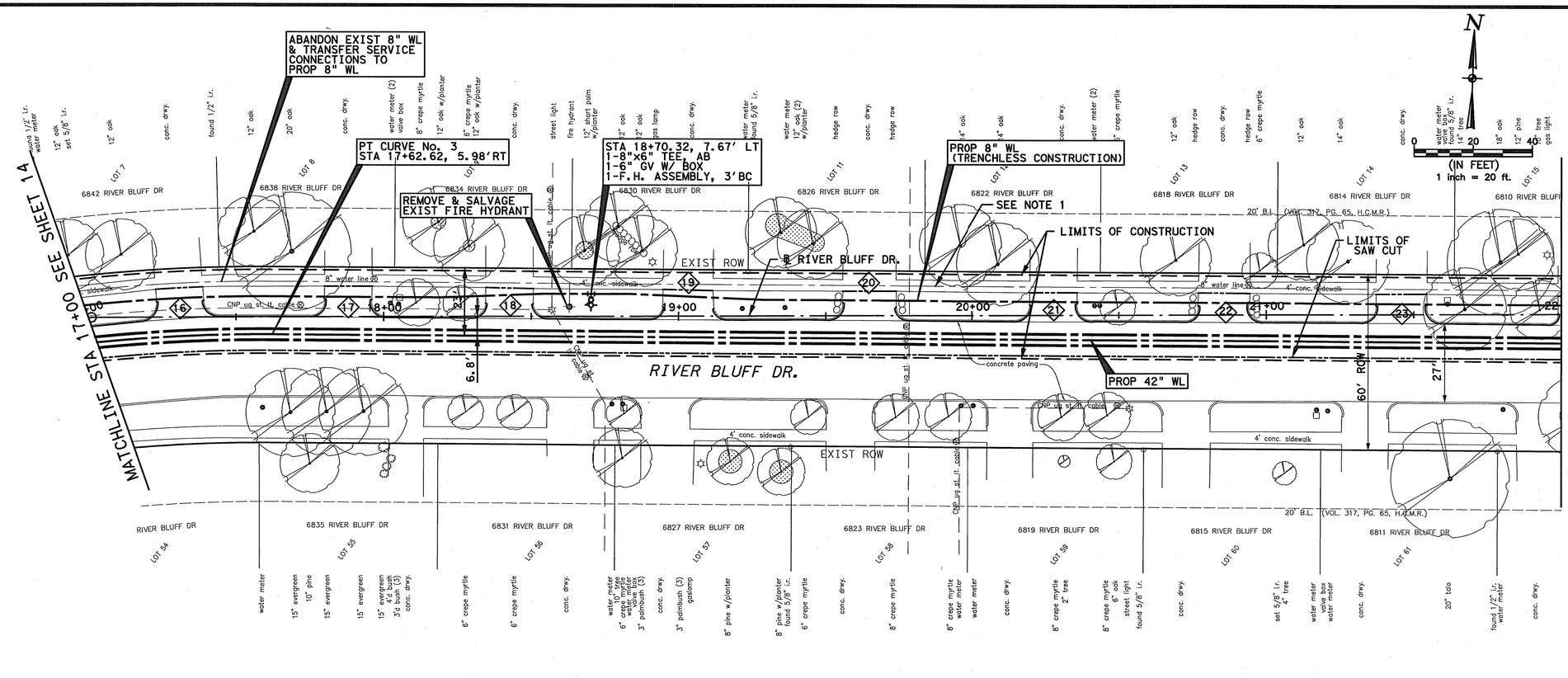

BENCHMARK:

CITY OF HOUSTON SURVEY MARKER 5151-7715, FLOODPLAIN REFERENCE MARK NUMBER 030130, A BRASS DISK STAMPED 030130 AN BRIDGE AT WEST OREM DRIVE (E-BOUND) AND SIMS BAYOU LOCATED ON DOWNSTREAM, SOUTH CONCRETE WALK, AT SE CORNER OF BRIDGE IN KEYMAP 571-K IN THE SIMS WATERSHED NEAR STREAM C156-00-00

ELEV. 60.47 FEET NAVD 1988, 2001 ADJUSTMENT

NOTE:

ALL HORIZONTAL COORDINATES ARE BASED ON TEXAS STATE COORDINATE SYSTEM, SOUTH CENTRAL ZONE NAD 83, 1993 ADJUSTMENT.

T.B.M.-104
SET 5/8" I.R. W/CAP LOCATED ON NORTH SIDE OF RIVER BLUFF DR. APPROX. 385' WEST OF WOOD RIVER DR.
STA. 17+01
ELEV. =58.53'

NOTES:

1. CAUTION - EXIST 8" AC WL IN CLOSE PROXIMITY TO PROP 8" WL MAY LEAK. NO SEPARATE PAYMENT FOR GROUND WATER CONTROL RESULTING FROM LEAKING JOINTS. AVOID DISTURBING EXIST 8" AC LINE.
2. ADJUST EXIST WATER VALVE/METER BOXES TO NEW GRADE. REPLACE ALL MISSING OR DAMAGED WATER VALVE/METER BOXES AND COVERS.
3. XX DRIVEWAY IDENTIFICATION

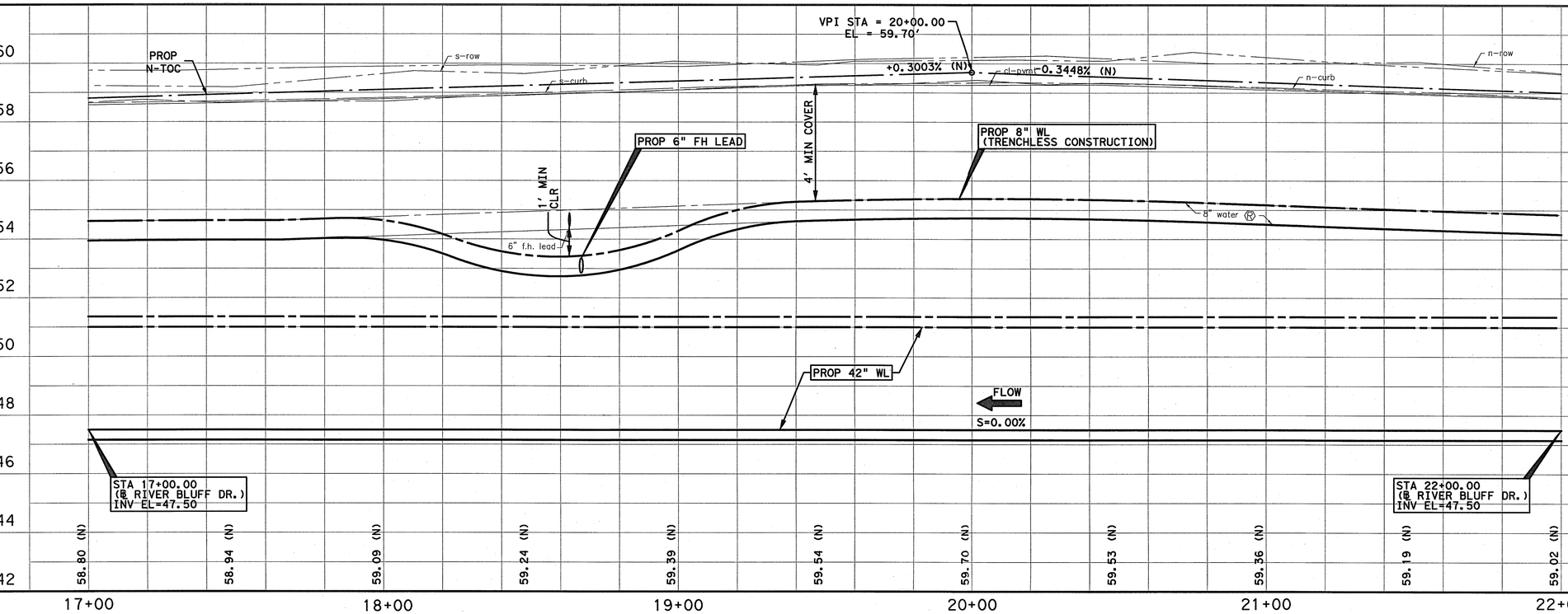

SWTP Surface Water Transmission Program

NOTICE:
AT LEAST 48 HOURS BEFORE EXCAVATION IN STREET R.O.W. OR EASEMENTS CALL THE LONE STAR NOTIFICATION 713-223-4567

PRIVATE UTILITY LINES SHOWN

CENTERPOINT ENERGY/ELECTRIC FACILITIES Date: 1-6-11
(APPROVED ONLY FOR CROSSING UNDERGROUND DUCTLINES UNLESS OTHERWISE NOTED.) VALID AT TIME OF REVIEW ONLY.

CENTERPOINT ENERGY/GAS FACILITIES Date: 1-6-11
(GAS SERVICE LINES ARE NOT SHOWN)

Approved for AT&T Texas/SBC underground conduit facilities only. Date: 1-6-11
SIGNATURE VALID FOR ONE YEAR

CABLE COMPANY Date:
SIGNATURE VALID FOR ONE YEAR

Lockwood, Andrews & Newnam, Inc.
A LEO A DALY COMPANY
2925 Briarpark Drive Houston, TX 77042

SURVEYED BY:
KUO & ASSOCIATES, INC.
C.O.H. Field Book P-5554

1-3-11
STATE OF TEXAS
ALISA GRUBER
95685
LICENSED PROFESSIONAL ENGINEER
Lockwood, Andrews & Newnam, Inc. Firm No. 2614

CITY OF HOUSTON
DEPARTMENT OF PUBLIC WORKS AND ENGINEERING

SWTP CONTRACT 74A-1

PLAN & PROFILE
WATER LINE
STA 17+00 TO STA 22+00

SHEET 6 OF 25

WBS NO.	S-000900-0109-4
DRAWING SCALE	
V: 1"=2'	H: 1"=20'
CITY OF HOUSTON PM	
ARTHUR C. MORRIS, P.E.	
SHEET NO.	15 OF 91

ACCEPTED AND FILED
48926
CITY DRAWING NO.

No.	Date	Revisions	Appr.

12/28/2010
jmusiolu
4:24:56 PM
L:\1301-10371-004\4-0-Production\4-01-Drawings\Civil\10371-4-PP-WL-06.dgn

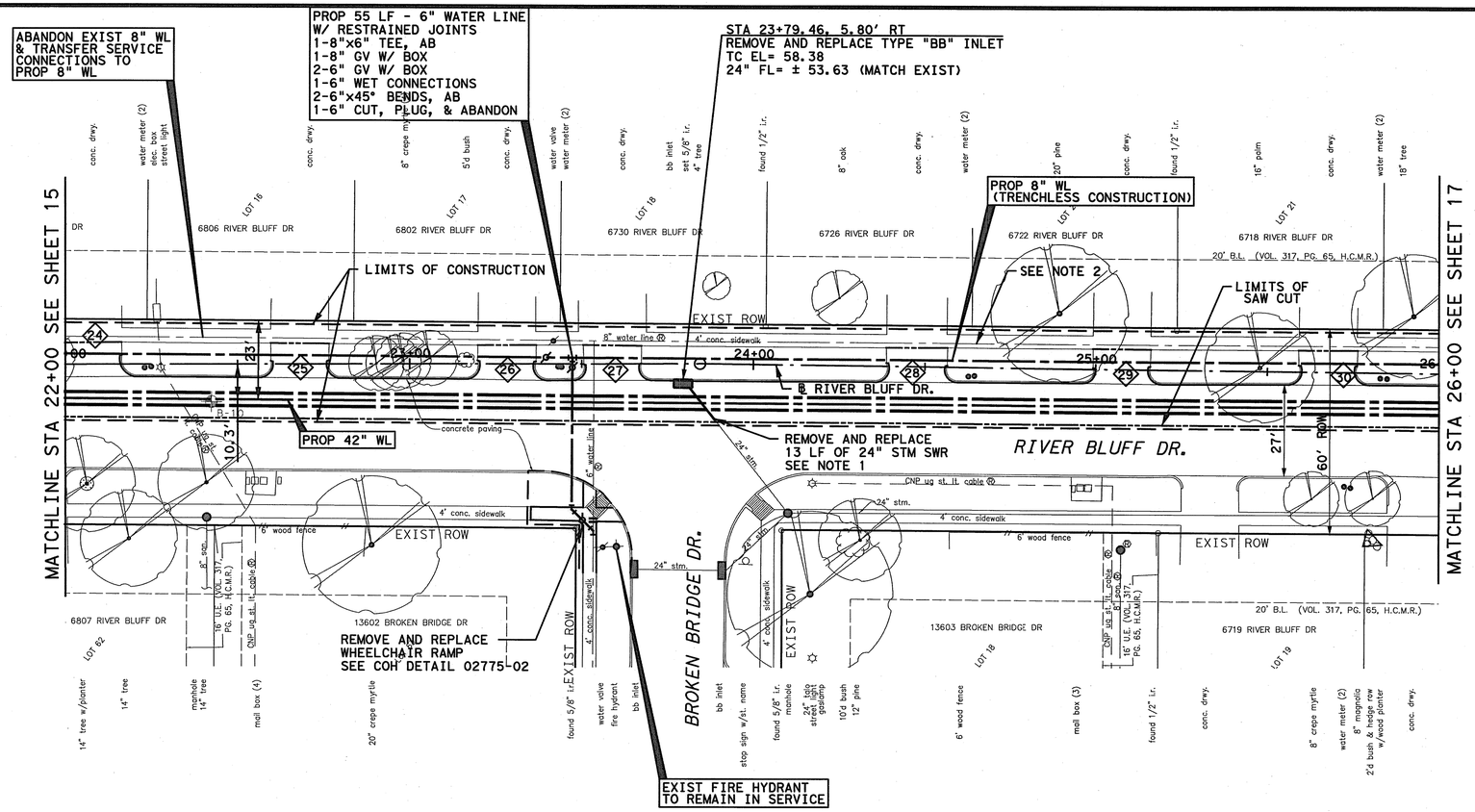

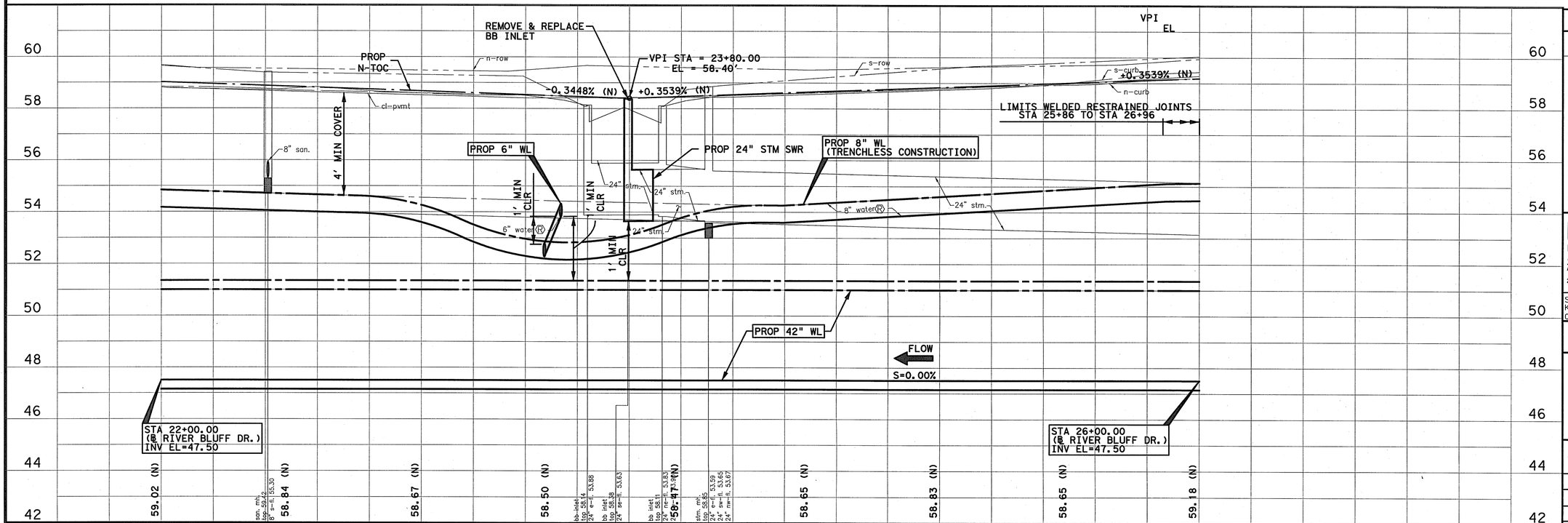

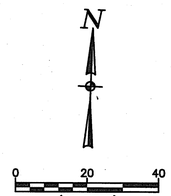

BENCHMARK:

CITY OF HOUSTON SURVEY MARKER 5151-7715, FLOODPLAIN REFERENCE MARK NUMBER 030130, A BRASS DISK STAMPED 030130 AN BRIDGE AT WEST OREM DRIVE (E-BOUND) AND SIMS BAYOU LOCATED ON DOWNSTREAM, SOUTH CONCRETE WALK, AT SE CORNER OF BRIDGE IN KEYMAP 571-K IN THE SIMS WATERSHED NEAR STREAM C156-00-00

ELEV. 60.47 FEET NAVD 1988, 2001 ADJUSTMENT

NOTE:

ALL HORIZONTAL COORDINATES ARE BASED ON TEXAS STATE COORDINATE SYSTEM, SOUTH CENTRAL ZONE NAD 83, 1993 ADJUSTMENT.

T.B.M.-106
SET 5/8" I.R. W/CAP LOCATED ON NORTH SIDE OF RIVER BLUFF DR. AND BROKEN BRIDGE DR. INTERSECTION.
STA. 23+84.44
ELEV.=58.73'

NOTES:

1. MATCH EXISTING FLOWLINE ELEVATION SEE DETAIL 2, SHEET 46
2. CAUTION - EXIST 8"AC WL IN CLOSE PROXIMITY TO PROP 8"WL MAY LEAK. NO SEPARATE PAYMENT FOR GROUND WATER CONTROL RESULTING FROM LEAKING JOINTS. AVOID DISTURBING EXIST 8"AC LINE.
3. ADJUST EXIST WATER VALVE/METER BOXES TO NEW GRADE. REPLACE ALL MISSING OR DAMAGED WATER VALVE/METER BOXES AND COVERS.
4. XX DRIVEWAY IDENTIFICATION

No.	Date	Revisions	Appr.

SWTP
Surface Water Transmission Program

NOTICE:
AT LEAST 48 HOURS BEFORE EXCAVATION IN STREET R.O.W. OR EASEMENTS CALL THE LONE STAR NOTIFICATION 713-223-4567

PRIVATE UTILITY LINES SHOWN

CENTERPOINT ENERGY/ELECTRIC FACILITIES Date: 1-6-11
(APPROVED ONLY FOR CROSSING UNDERGROUND DUCTLINES UNLESS OTHERWISE NOTED.) VALID AT TIME OF REVIEW ONLY.

CENTERPOINT ENERGY/GAS FACILITIES Date: 1-6-11
(GAS SERVICE LINES ARE NOT SHOWN)

Approved for AT&T Texas/SBC underground conduit facilities only. Date: 1-6-11
SIGNATURE VALID FOR ONE YEAR

CABLE COMPANY Date:
SIGNATURE VALID FOR ONE YEAR

LAN
Lockwood, Andrews & Newnam, Inc.
A LEO A DALY COMPANY
2925 Briarpark Drive Houston, TX 77042

SURVEYED BY:
KUO & ASSOCIATES, INC.
C.O.H. Field Book P-5554

1-3-11
STATE OF TEXAS
ALISA GRUBER
95685
LICENSED PROFESSIONAL ENGINEER
Lockwood, Andrews & Newnam, Inc. Firm No. 2614

CITY OF HOUSTON
DEPARTMENT OF PUBLIC WORKS AND ENGINEERING

SWTP CONTRACT 74A-1

PLAN & PROFILE
WATER LINE
STA 22+00 TO STA 26+00

SHEET 7 OF 25

WBS NO.	S-000900-0109-4
DRAWING SCALE	V: 1"=2' H: 1"=20'
CITY OF HOUSTON PM	ARTHUR C. MORRIS, P.E.
SHEET NO.	16 OF 91

PUBLIC WORKS AND ENGINEERING
ACCEPTED AND FILED
48326
CITY SECRETARY
HOUSTON, TEXAS

12/28/2010 4:24:57 PM jmusiku
L:\130-10337-004\4-0-Product\en\4-01-Drawings\Ctl\v11\10337-4-PP-WL-07.dgn

STA 26+82
FLUSH MOUNTED POTENTIAL TEST STATION
SEE DETAIL 1, SHT 53

STA 27+27.00, 5.18'RT
1-42" BFV W/OPERATOR MH
SEE DETAIL 1, SHT 44

STA 27+47.00, 9.30'RT
1-3" AI/VR VALVE, VENT PIPING W/ 3-BOLLARDS AND ACCESS MANWAY W/SERVICE MH
SEE DETAIL 5, SHT 45

STA 28+58.52, 2.19'RT
REMOVE AND REPLACE TYPE "BB" INLET
TC EL= 58.56
24" FL= ± 54.14 (MATCH EXIST)

STA 26+31.00, 14.27'RT
DRAIN LINE VALVE W/SERVICE MH AND DRAIN LINE CONNECTION
SEE DETAIL 5, SHT 44

PROP 8" WL (TRENCHLESS CONSTRUCTION)

ABANDON EXIST 8" WL & TRANSFER SERVICE CONNECTIONS TO PROP 8" WL

SEE NOTE 2

LIMITS OF CONSTRUCTION

REMOVE AND REPLACE 13 LF OF 24" STM SWR SEE NOTE 3

LIMITS OF SAW CUT

MATCHLINE STA 26+00 SEE SHEET 16

MATCHLINE STA 30+00 SEE SHEET 18

RIVER BLUFF DR.

WOODSPIRE DR.

SEE NOTE 1

PROP 42" WL

STA 26+82.00, 9+70'RT
1-ACCESS MANWAY W/SERVICE MH
SEE DETAIL 4, SHT 46

PROP 53 LF - 8" WATER LINE W/ RESTRAINED JOINTS
1-8"x8" TEE, AB
3-8" GV W/ BOX
1-8" WET CONNECTION
1-8"x45° BEND, AB
2-8"x22.5°BENDS, AB
1-8" CUT, PLUG, & ABANDON

PROP. 27'~18" DRAIN LINE @ 0.5% SLOPE

PROP. TYPE "C" MANHOLE
STA. 26+34.84, 41.4'RT
TR EL=59.35
24"FL= ± 53.72 (E&W)
(MATCH EXIST)
18"FL=53.70 (N)

REMOVE AND REPLACE WHEELCHAIR RAMP
SEE COH DETAIL 02775-02

EXIST FIRE HYDRANT TO REMAIN IN SERVICE

STA 26+31.00
℄ DRAIN LINE VALVE W/SERVICE MH
SEE DETAIL 5, SHT 44

STA 26+82.00
1-ACCESS MANWAY W/SERVICE MH
SEE DETAIL 4, SHT 46

STA 27+27.00
1-42" BFV W/OPERATOR MH
SEE DETAIL 1, SHT 44

STA 27+47.00
1-3" AI/VR VALVE AND ACCESS MANWAY W/SERVICE MH
SEE DETAIL 5, SHT 45

VPI STA = 26+20.00
EL = 59.26'

VPI STA = 27+00.00
EL = 59.50'

VPI STA = 28+60.00
EL = 58.78'

VPI STA = 29+80.00
EL = 59.17'

+0.3539% (N)
+0.3000% (N)
-0.4586% (N)
-0.4586% (N)
+0.3171% (N)
-0.5111% (N)

REMOVE & REPLACE BB INLET

PROP N-TOC

PROP 24" STM SWR

PROP 8" WL

PROP 42" WL

PROP. TYPE "C" MANHOLE
STA. 26+34.84
24"FL= ± 53.72 (E&W)
(MATCH EXIST)
18"FL=53.70 (N)

LIMITS WELDED RESTRAINED JOINTS
STA 25+86 TO STA 26+95

50 LF DIP W/ RESTRAINED JOINTS FOR VERTICAL PIPE OFFSET
SEE COH 02511-01, SHT 49

FLOW
S=0.00%

STA 26+00.00
(@ RIVER BLUFF DR.)
INV EL=47.50

STA 26+04.75
VPI EL=47.50

STA 26+21.17
VPI EL=40.70

S=(+)41.42%

S=(-)41.42%

S=0.00%

STA 26+61.17
VPI EL=40.70

STA 26+77.10
VPI EL=47.30

STA 30+00.00
(@ RIVER BLUFF DR.)
INV EL=47.30

1' MIN CLR
2' MIN CLR
4' MIN COVER

26+00
27+00
28+00
29+00
30+00

BENCHMARK:

CITY OF HOUSTON SURVEY MARKER 5151-7715, FLOODPLAIN REFERENCE MARK NUMBER 030130, A BRASS DISK STAMPED 030130 AN BRIDGE AT WEST OREM DRIVE (E-BOUND) AND SIMS BAYOU LOCATED ON DOWNSTREAM, SOUTH CONCRETE WALK, AT SE CORNER OF BRIDGE IN KEYMAP 571-K IN THE SIMS WATERSHED NEAR STREAM C156-00-00

ELEV. 60.47 FEET NAVD 1988, 2001 ADJUSTMENT

NOTE:

ALL HORIZONTAL COORDINATES ARE BASED ON TEXAS STATE COORDINATE SYSTEM, SOUTH CENTRAL ZONE NAD 83, 1993 ADJUSTMENT.

0 20 40
(IN FEET)
1 inch = 20 ft.

NOTES:

1. SUPPORT 96"STM SWR AS REQUIRED FOR CONSTRUCTION
2. CAUTION - EXIST 8"AC WL IN CLOSE PROXIMITY TO PROP 8"WL MAY LEAK. NO SEPARATE PAYMENT FOR GROUND WATER CONTROL RESULTING FROM LEAKING JOINTS. AVOID DISTURBING EXIST 8"AC LINE.
3. MATCH EXISTING FLOWLINE ELEVATION SEE DETAIL 2, SHEET 46
4. ADJUST EXIST WATER VALVE/METER BOXES TO NEW GRADE. REPLACE ALL MISSING OR DAMAGED WATER VALVE/METER BOXES AND COVERS.
5. ⟨X⟩ DRIVEWAY IDENTIFICATION

No.	Date	Revisions	App.

SWTP
Surface Water Transmission Program

NOTICE:
AT LEAST 48 HOURS BEFORE EXCAVATION IN STREET R.O.W. OR EASEMENTS CALL THE LONE STAR NOTIFICATION 713-223-4567

PRIVATE UTILITY LINES SHOWN

CENTERPOINT ENERGY/ELECTRIC FACILITIES Date: 1-6-11
(APPROVED ONLY FOR CROSSING UNDERGROUND DUCTLINES UNLESS OTHERWISE NOTED.) VALID AT TIME OF REVIEW ONLY.

CENTERPOINT ENERGY/GAS FACILITIES Date: 1-6-11
(GAS SERVICE LINES ARE NOT SHOWN)

Approved for AT&T Texas/SBC underground conduit facilities only. Date: 1-6-11
SIGNATURE VALID FOR ONE YEAR

CABLE COMPANY Date:
SIGNATURE VALID FOR ONE YEAR

Lockwood, Andrews & Newnam, Inc.
A LEO A DALY COMPANY
2925 Briarpark Drive Houston, TX 77042

STATE OF TEXAS
ALISA GRUBER
95685
LICENSED PROFESSIONAL ENGINEER
1-3-11
Lockwood, Andrews & Newnam, Inc Firm No. 2614

SURVEYED BY:
KUO & ASSOCIATES, INC.
C.O.H. Field Book P-5554

CITY OF HOUSTON
DEPARTMENT OF PUBLIC WORKS AND ENGINEERING

SWTP CONTRACT 74A-1

PLAN & PROFILE
WATER LINE
STA 26+00 TO STA 30+00

SHEET 8 OF 25

WBS NO.
S-000900-0109-4

DRAWING SCALE
V: 1"=2' H: 1"=20'

CITY OF HOUSTON PM
ARTHUR C. MORRIS, P.E.

SHEET NO. 17 OF 91

PUBLIC WORKS AND ENGINEERING
ACCEPTED AND FILED
48926
CITY OF HOUSTON, TEXAS

12/28/2010
4:24:58 PM
jmuskru
L:\1130-10337-004\4-0-Production\04-01-Drawings\Civil\10337-4-PP-WL-08.dgn

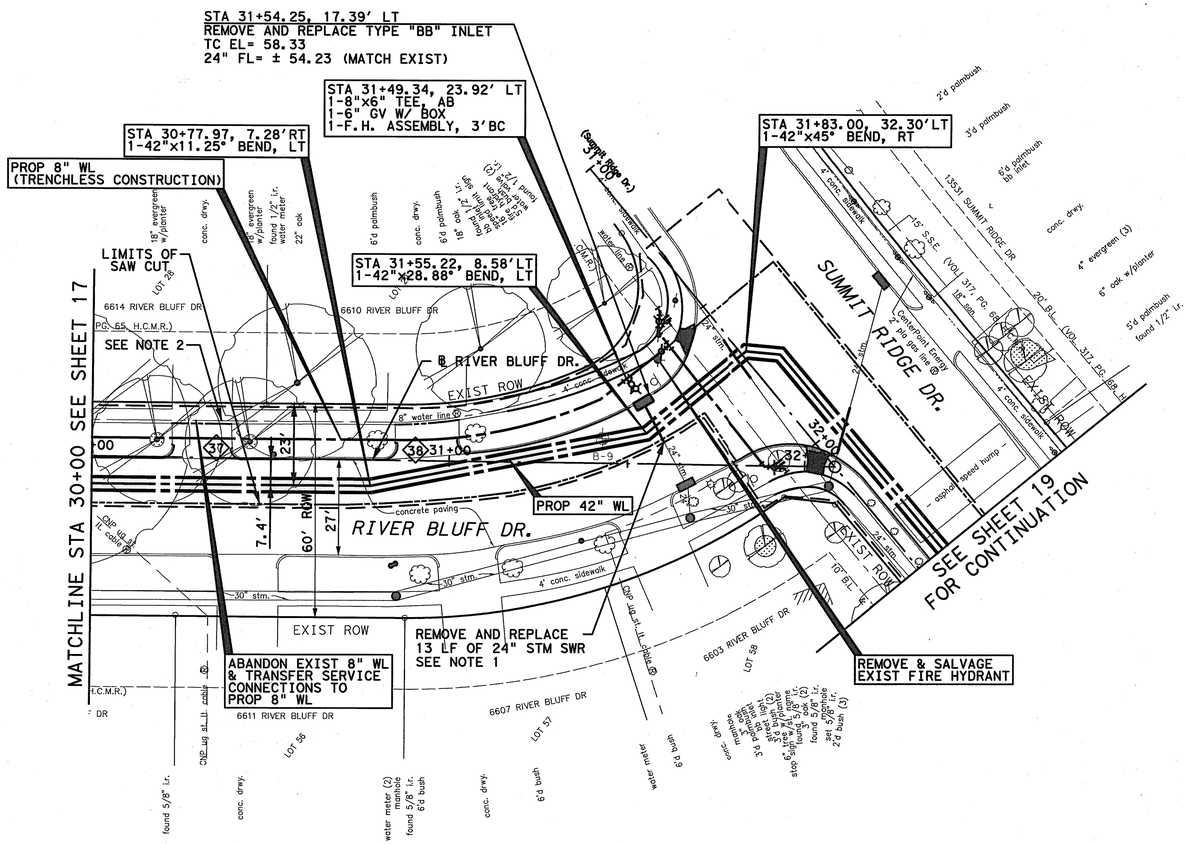
STA 31+54.25, 17.39' LT
REMOVE AND REPLACE TYPE "BB" INLET
TC EL= 58.33
24" FL= ± 54.23 (MATCH EXIST)
STA 31+49.34, 23.92' LT
1-8"x6" TEE, AB
1-6" GV W/ BOX
1-F.H. ASSEMBLY, 3'BC
STA 30+77.97, 7.28'RT
1-42"x11.25° BEND, LT
PROP 8" WL
(TRENCHLESS CONSTRUCTION)
STA 31+55.22, 8.58'LT
1-42"x28.88° BEND, LT
STA 31+83.00, 32.30'LT
1-42"x45° BEND, RT
LIMITS OF SAW CUT
MATCHLINE STA 30+00 SEE SHEET 17
6614 RIVER BLUFF DR
6610 RIVER BLUFF DR
6611 RIVER BLUFF DR
6607 RIVER BLUFF DR
6603 RIVER BLUFF DR
13531 SUMMIT RIDGE DR
SUMMIT RIDGE DR.
RIVER BLUFF DR.
SEE NOTE 2
EXIST ROW
60' ROW
7.4'
27'
PROP 42" WL
PROP 8" WL
ABANDON EXIST 8" WL & TRANSFER SERVICE CONNECTIONS TO PROP 8" WL
REMOVE AND REPLACE 13 LF OF 24" STM SWR SEE NOTE 1
REMOVE & SALVAGE EXIST FIRE HYDRANT
SEE SHEET 19 FOR CONTINUATION
concrete paving
4' conc. sidewalk
30" stm.
8" water line
asphalt speed hump
15' S.S.E. (VOL. 317, PG. 65 H.C.M.R.)
Centerpoint Energy 2" pip gas line
found 5/8" I.r.
set 5/8" I.r. w/cap "Kuo"
found 1/2" I.r.
found 3/4" pipe
set 5/8" I.r. w/cap "Kuo"
(found 5/8" I.r.)
(set 5/8" I.r. w/cap "Kuo")
found 5/8" I.r.
water meter (2) manhole found 5/8" I.r.
6'd bush
conc. drwy.
6'd palmbush
3'd palmbush
4' evergreen (3)
6" oak w/planter
5'd palmbush found 1/2" I.r.
22" oak
18" oak
36" evergreen w/planter
found 1/2" I.r. water meter
2'd palmbush
6'd palmbush 65 feet
20' B.L. (VOL. 317, PG. 65 H.C.M.R.)
4' conc. sidewalk
10' BL
20' B.L.
found 5/8" I.r.
set 5/8" I.r. w/cap "Kuo"
found 5/8" I.r.
found 3/4" pipe
set 5/8" I.r. w/cap "Kuo"
found 5/8" I.r.
set 5/8" I.r. w/cap "Kuo"
found 5/8" I.r.
found 5/8" I.r.
found 5/8" I.r.
set 5/8" I.r. w/cap "Kuo"

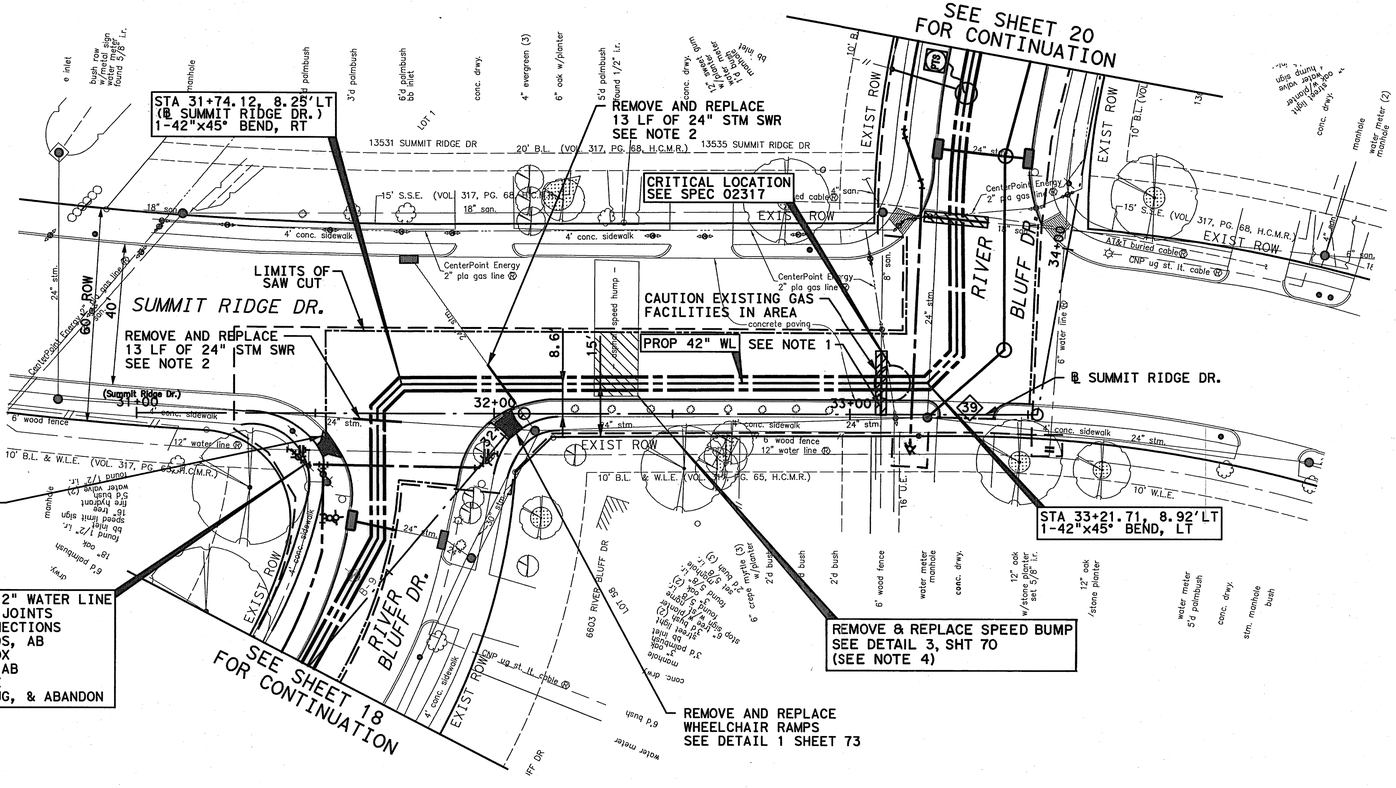

0 20 40
(IN FEET)
1 inch = 20 ft.

BENCHMARK:

CITY OF HOUSTON SURVEY MARKER 5151-7715, FLOODPLAIN REFERENCE MARK NUMBER 030130, A BRASS DISK STAMPED 030130 AN BRIDGE AT WEST OREM DRIVE (E-BOUND) AND SIMS BAYOU LOCATED ON DOWNSTREAM, SOUTH CONCRETE WALK, AT SE CORNER OF BRIDGE IN KEYMAP 571-K IN THE SIMS WATERSHED NEAR STREAM C156-00-00

ELEV. 60.47 FEET NAVD 1988, 2001 ADJUSTMENT

NOTE:

ALL HORIZONTAL COORDINATES ARE BASED ON TEXAS STATE COORDINATE SYSTEM, SOUTH CENTRAL ZONE NAD 83, 1993 ADJUSTMENT.

T.B.M.-108
SET 5/8" I.R. W/CAP LOCATED ON SOUTHWEST CORNER OF RIVER BLUFF DR. AND SUMMIT RIDGE DR. INTERSECTION.
STA. 32+08.45
ELEV.=58.72'

T.B.M.-200
SET 5/8" I.R. LOCATED ON WEST SIDE OF SUMMIT RIDGE DR. AND RIVER BLUFF DR. INTERSECTION.
STA. 33+52.60
ELEV.=58.67'

NOTES:

1. REMOVE AND REPLACE 18 LF OF EXISTING 8" SAN SWR WITH PRESSURE RATED PIPE CENTERED ON 42" WATER LINE
2. MATCH EXISTING FLOWLINE ELEVATION SEE DETAIL 2, SHEET 46
3. ADJUST EXIST WATER VALVE/METER BOXES TO NEW GRADE. REPLACE ALL MISSING OR DAMAGED WATER VALVE/METER BOXES AND COVERS.
4. PROVIDE SMOOTH VERTICLE TRANSITION BETWEEN EXISTING & PROPOSED SPEED BUMP.

No.	Date	Revisions

SWTP
Surface Water Transmission Program

NOTICE:
AT LEAST 48 HOURS BEFORE EXCAVATION IN STREET R.O.W. OR EASEMENTS CALL THE LONE STAR NOTIFICATION 713-223-4567

PRIVATE UTILITY LINES SHOWN

CENTERPOINT ENERGY/ELECTRIC FACILITIES Date: 1-6-11
(APPROVED ONLY FOR CROSSING UNDERGROUND DUCTLINES UNLESS OTHERWISE NOTED.) VALID AT TIME OF REVIEW ONLY.

CENTERPOINT ENERGY/GAS FACILITIES Date: 1-6-11
(GAS SERVICE LINES ARE NOT SHOWN)

Approved for AT&T Texas/SBC underground conduit facilities only. Date: 1-6-11
SIGNATURE VALID FOR ONE YEAR

CABLE COMPANY Date:
SIGNATURE VALID FOR ONE YEAR

Lockwood, Andrews & Newnam, Inc.
A LEO A DALY COMPANY
2925 Briarpark Drive Houston, TX 77042

SURVEYED BY:
KUO & ASSOCIATES, INC.
C.O.H. Field Book P-5554

1-3-11
STATE OF TEXAS
ALISA GRUBER
95685
LICENSED PROFESSIONAL ENGINEER
Lockwood, Andrews & Newnam, Inc. Firm No. 2614

CITY OF HOUSTON
DEPARTMENT OF PUBLIC WORKS AND ENGINEERING

SWTP CONTRACT 74A-1

PLAN & PROFILE
WATER LINE
STA 32+08.45 TO
STA 33+52.60

SHEET 10 OF 25

WBS NO.
S-000900-0109-4

DRAWING SCALE
V: 1"=2' H: 1"=20'

CITY OF HOUSTON PM
ARTHUR C. MORRIS, P.E.

SHEET NO. 19 OF 91

ALL WORKS ARE ENGINEERED ACCEPTED AND FILED
48326
CITY DRAWING NUMBER
HOUSTON, TEXAS

12/28/2010

L:\130-10337-004\4-0-Product\en\4-01-Drawings\Civil\10337-4-PP-PL-10.dgn
jmusku
12/28/2010 4:25:00 PM

PROP. TYPE "C" MANHOLE
STA. 34+90.29, 16.9'LT
TR EL=58.08
24"FL=53.51 (W&S)

STA 34+38
FLUSH MOUNTED POTENTIAL
TEST STATION
SEE DETAIL 1, SHT 53

CURVE No. 4 (℄ PROP 42" WL)
R=222.00'
D=40° 7' 1.79"
T=81.06'
L=155.43'
CH=152.28'

STA 34+38.00, 35.94' LT
1-3" AI/VR VALVE, VENT PIPING W/
1-BOLLARD AND ACCESS
MANWAY W/SERVICE MH
SEE DETAIL 5, SHT 45

STA 34+21.26, 40.94' LT
REMOVE AND REPLACE TYPE "BB" INLET
TC EL= 58.10
24" FL= 53.75

2-8"x22.5° BENDS, AB

SEE SHEET 19
FOR CONTINUATION

REMOVE 75 LF OF
24" STM SWR

CONNECT TO EXIST MANHOLE
MATCH EXIST

1-12"x8" TS&V W/ BOX

STA 33+29.98, 17.26' LT
1-42"x45° BEND, LT

PROP. 29'~24" RCP

PROP. TYPE "C" MANHOLE
STA. 33+68.90, 12.5'LT
TR EL=58.53
24"FL=53.26

1-6" CUT, PLUG, & ABANDON

PROP. 55'~24" RCP

PC CURVE No. 4
STA 34+01.52, 32.15'LT

CRITICAL LOCATION
SEE SPEC 02317

STA 34+23.00, 14.3' LT
REMOVE AND REPLACE
TYPE "BB" INLET
TC EL= 57.98
24" FL= 53.63

PROP. TYPE "C" MANHOLE
STA. 34+22.67, 21.9'LT
TR EL=57.82
24"FL=53.71 (NW)
24"FL=53.62 (SE)
24"FL=53.37 (SW&NE)

PROP. 68'~24" RCP

REMOVE AND REPLACE
18 LF OF 24" STM SWR

REMOVE AND REPLACE
6 LF OF 24" STM SWR

CAUTION EXISTING GAS
FACILITIES IN AREA

PROP. 7'~24" RCP

PROP. TYPE "BB" INLET
STA 34+90.35, 9.4' LT
TC EL= 58.12
24" FL= 53.52

PT CURVE No. 4
STA 35+44.33, 24.09'LT

STA 35+45.11, 40.08' LT
1-8"x6" TEE, AB
1-6" GV W/ BOX
1-F.H. ASSEMBLY, 3' BC

PROP 8" WL
(TRENCHLESS CONSTRUCTION)

LIMITS OF CONSTRUCTION

LIMITS OF
SAW CUT

REMOVE & SALVAGE
EXIST FIRE HYDRANT

PROP 42" WL

ABANDON EXIST 6" WL
& TRANSFER SERVICE
CONNECTIONS TO
PROP 8" WL

RIVER BLUFF DR.

SUMMIT RIDGE DR.

60' ROW

27'

18.9'

C.W. ADAMS SURVEY, A-101
SOUTHWEST CROSSING, SEC. 7
BLOCK 7, VOL. 317, PG. 68, H.C.M.R.

C.W. ADAMS SURVEY, A-101
SOUTHWEST CROSSING, SEC. 7
BLOCK 6, VOL. 317, PG. 68, H.C.M.R.

6530 RIVER BLUFF DR
6526 RIVER BLUFF DR
6522 RIVER BLUFF DR
6518 RIVER BLUFF DR
6514 RIVER BLUFF
6534 RIVER BLUFF DR
6527 RIVER BLUFF DR
6523 RIVER BLUFF DR
6519 RIVER BLUFF DR
6515 RIVER BLUFF DR

MATCHLINE STA 38+00 SEE SHEET 21

N

0 20 40
(IN FEET)
1 inch = 20 ft.

BENCHMARK:

CITY OF HOUSTON SURVEY MARKER 5151-7715,
FLOODPLAIN REFERENCE MARK NUMBER 030130,
A BRASS DISK STAMPED 030130 AN BRIDGE
AT WEST OREM DRIVE (E-BOUND) AND SIMS BAYOU
LOCATED ON DOWNSTREAM, SOUTH CONCRETE
WALK, AT SE CORNER OF BRIDGE IN KEYMAP 571-K
IN THE SIMS WATERSHED NEAR STREAM C156-00-00

ELEV. 60.47 FEET NAVD 1988, 2001 ADJUSTMENT

NOTE:

ALL HORIZONTAL COORDINATES ARE BASED ON TEXAS
STATE COORDINATE SYSTEM, SOUTH CENTRAL ZONE
NAD 83, 1993 ADJUSTMENT.

T.B.M.-200
SET 5/8" I.R. LOCATED ON WEST SIDE OF SUMMIT
RIDGE DR. AND RIVER BLUFF DR. INTERSECTION.
STA. 33+52.60
ELEV.=58.67'

T.B.M.-109
SET 5/8" I.R. W/CAP LOCATED ON SOUTH SIDE
OF RIVER BLUFF DR. APPROX. 110' EAST OF
SUMMIT RIDGE DR.
STA. 35+12.55
ELEV.=58.50'

NOTES:

1. REMOVE AND REPLACE 18 LF OF EXISTING 18"SAN SWR WITH PRESSURE RATED PIPE CENTERED ON 42" WATER LINE
2. MATCH EXISTING FLOWLINE ELEVATION SEE DETAIL 2, SHEET 46
3. ADJUST EXIST WATER VALVE/METER BOXES TO NEW GRADE. REPLACE ALL MISSING OR DAMAGED WATER VALVE/METER BOXES AND COVERS.
4. ⟨X⟩ DRIVEWAY IDENTIFICATION

No.	Date	Revisions	Apv.

LIMITS WELDED RESTRAINED JOINTS
STA 30+60 TO STA 34+52

VPI STA = 34+20.00
EL = 58.34'
-0.6190% (N)

REMOVE & REPLACE
BB INLET

STA 34+38.00
1-3" AI/VR VALVE AND ACCESS
MANWAY W/SERVICE MH
SEE DETAIL 5, SHT 45

+0.3182% (N)

PROP
N=TOC

s-row

cl-pvmt

s-curb

VPI STA = 37+65.00
EL = 59.46'
+0.3182% (N) -0.3333% (N)

3' ABS MIN
COVER

E/R STA 34+17.49
EL = 58.36' (N)

24" stm.

PROP 24" STM SWR

4" san.

4' MIN COVER

PROP 8" WL
(TRENCHLESS CONSTRUCTION)

25 LF DIP W/ RESTRAINED JOINTS
FOR VERTICAL PIPE OFFSET
SEE COH 02511-01, SHT 49

12" water

1' MIN
CLR

24" stm. (n)

24" stm. (s)

6" water

PROP 6" FH LEAD

6" f.h. lead

1' MIN
CLR

PROP. 29'~24" RCP
@ 0.2%

PROP. 55'~24" RCP
@ 0.2%

8" san.

PROP. TYPE "C" MANHOLE
STA. 33+68.90
24"FL=53.26

PROP. 68'~24" RCP
@ 0.2%

PROP. TYPE "C" MANHOLE
STA. 34+22.67
24"FL=53.71 (NW)
24"FL=53.62 (SE)
24"FL=53.37 (SW&NE)

PROP. TYPE "C" MANHOLE
STA. 34+90.29
24"FL=53.51 (W&S)

PROP 42" WL

FLOW

S=0.00%

PROP 18" SAN SWR

18" san. (n)

18" san. (s)

2' MIN
CLR

S=(+)1.42%

STA 34+31.83
VPI EL=48.10

CENTER ONE FULL SECTION
OF PROP 42" WATER LINE
W/ RESTRAINED JOINTS
UNDER SANITARY SEWER

STA 38+00.00
(@ RIVER BLUFF DR.)
INV EL=48.10

STA 33+55.80
(@ RIVER BLUFF DR.)
INV EL=44.80

STA 33+77.79
INV EL=44.80

STA 34+10.82
VPI EL=39.40

STA 33+90.82
VPI EL=39.40

58.43 (N)
58.58 (N)
58.77 (N)
58.93 (N)
59.09 (N)
59.25 (N)
59.41 (N)
59.34 (N)

60
58
56
54
52
50
48
46
44
42

33+00
34+00
35+00
36+00
37+00
38+00

SWTP
Surface Water Transmission Program

NOTICE:
AT LEAST 48 HOURS BEFORE EXCAVATION IN STREET R.O.W. OR EASEMENTS CALL THE LONE STAR NOTIFICATION 713-223-4567

PRIVATE UTILITY LINES SHOWN

CENTERPOINT ENERGY/ELECTRIC FACILITIES
(APPROVED ONLY FOR CROSSING UNDERGROUND DUCTLINES UNLESS OTHERWISE NOTED.) VALID AT TIME OF REVIEW ONLY.
Date: 1-6-11

CENTERPOINT ENERGY/GAS FACILITIES
(GAS SERVICE LINES ARE NOT SHOWN)
Date: 1-6-11

Approved for AT&T Texas/SBC underground conduit facilities only.
SIGNATURE VALID FOR ONE YEAR
Date: 1-6-11

CABLE COMPANY
SIGNATURE VALID FOR ONE YEAR
Date:

Lockwood, Andrews & Newnam, Inc.
A LEO A DALY COMPANY
2925 Briarpark Drive Houston, TX 77042

SURVEYED BY:
KUO & ASSOCIATES, INC.
C.O.H. Field Book P-5554

1-3-11
STATE OF TEXAS
ALISA GRUBER
95685
LICENSED PROFESSIONAL ENGINEER
Lockwood, Andrews & Newnam, Inc. Firm No. 2614

CITY OF HOUSTON
DEPARTMENT OF PUBLIC WORKS AND ENGINEERING

SWTP CONTRACT 74A-1

PLAN & PROFILE
WATER LINE
STA 33+52.60 TO STA 38+00

SHEET 11 OF 25

WBS NO.
S-000900-0109-4

DRAWING SCALE
V: 1"=2' H: 1"=20'

CITY OF HOUSTON PM
ARTHUR C. MORRIS, P.E.

SHEET NO. 20 OF 91

PUBLIC WORKS AND ENGINEERING
ACCEPTED AND FILED
48326
BY DRAWING NO.
HOUSTON, TEXAS

12/28/2010
L:\1130-1037-004\4-0-Production\4-01-Drawings\Ltr\1\1037-4-PP-WL-11.dgn
jmsalva
4:25:01 PM

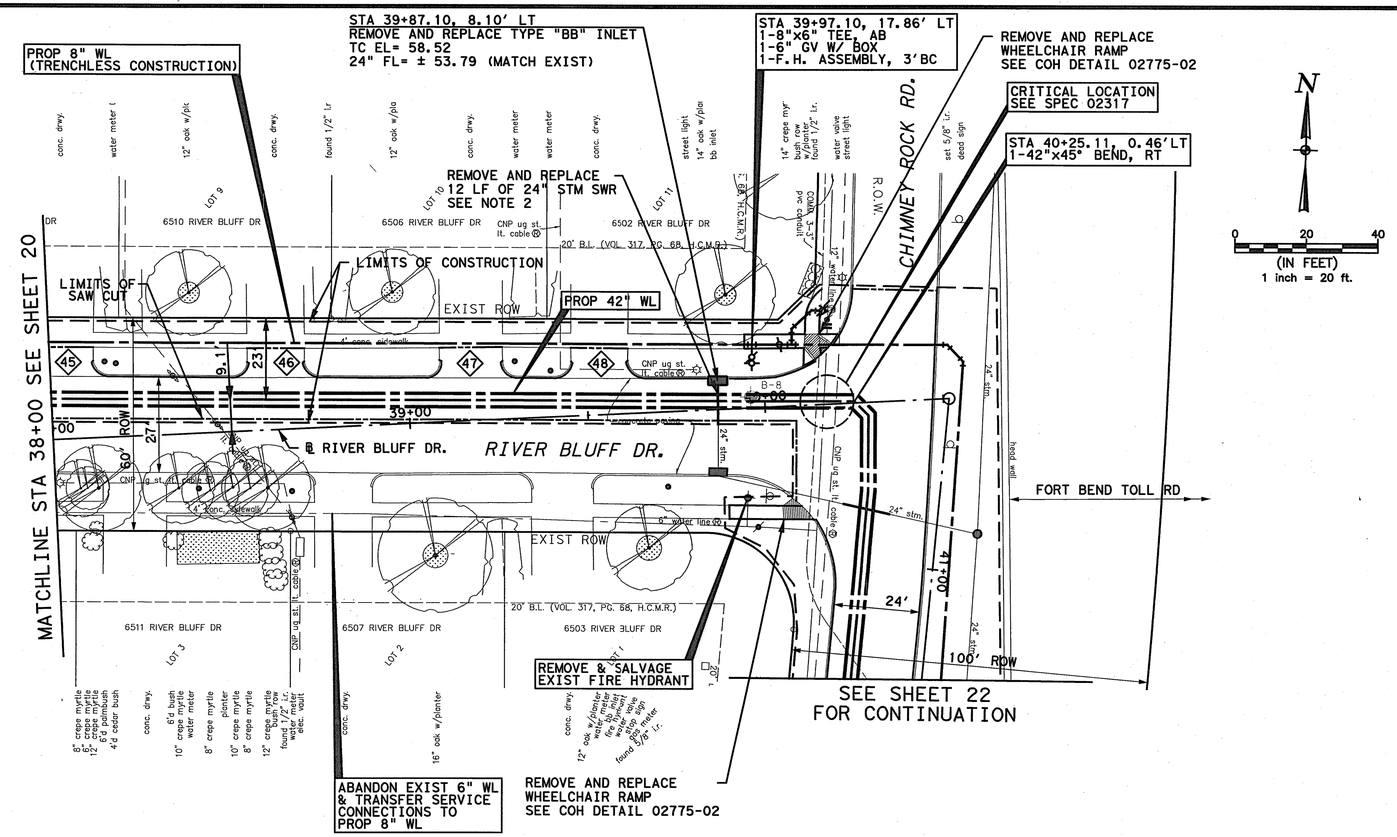

BENCHMARK:

CITY OF HOUSTON SURVEY MARKER 5151-7715, FLOODPLAIN REFERENCE MARK NUMBER 030130, A BRASS DISK STAMPED 030130 AN BRIDGE AT WEST OREM DRIVE (E-BOUND) AND SIMS BAYOU LOCATED ON DOWNSTREAM, SOUTH CONCRETE WALK, AT SE CORNER OF BRIDGE IN KEYMAP 571-K IN THE SIMS WATERSHED NEAR STREAM C156-00-00

ELEV. 60.47 FEET NAVD 1988, 2001 ADJUSTMENT

NOTE:

ALL HORIZONTAL COORDINATES ARE BASED ON TEXAS STATE COORDINATE SYSTEM, SOUTH CENTRAL ZONE NAD 83, 1993 ADJUSTMENT.

T.B.M.-110
SET 5/8" I.R. W/CAP LOCATED ON EAST SIDE OF RIVER BLUFF DR. AND CHIMNEY ROCK RD. INTERSECTION.
STA. 40+51.65
ELEV. =59.38'

NOTES:

1. REMOVE AND REPLACE 18 LF OF EXISTING 8" SAN SWR WITH PRESSURE RATED PIPE CENTERED ON 42" WATER LINE
2. MATCH EXISTING FLOWLINE ELEVATION SEE DETAIL 2, SHEET 46
3. ADJUST EXIST WATER VALVE/METER BOXES TO NEW GRADE. REPLACE ALL MISSING OR DAMAGED WATER VALVE/METER BOXES AND COVERS.
4. (XX) DRIVEWAY IDENTIFICATION

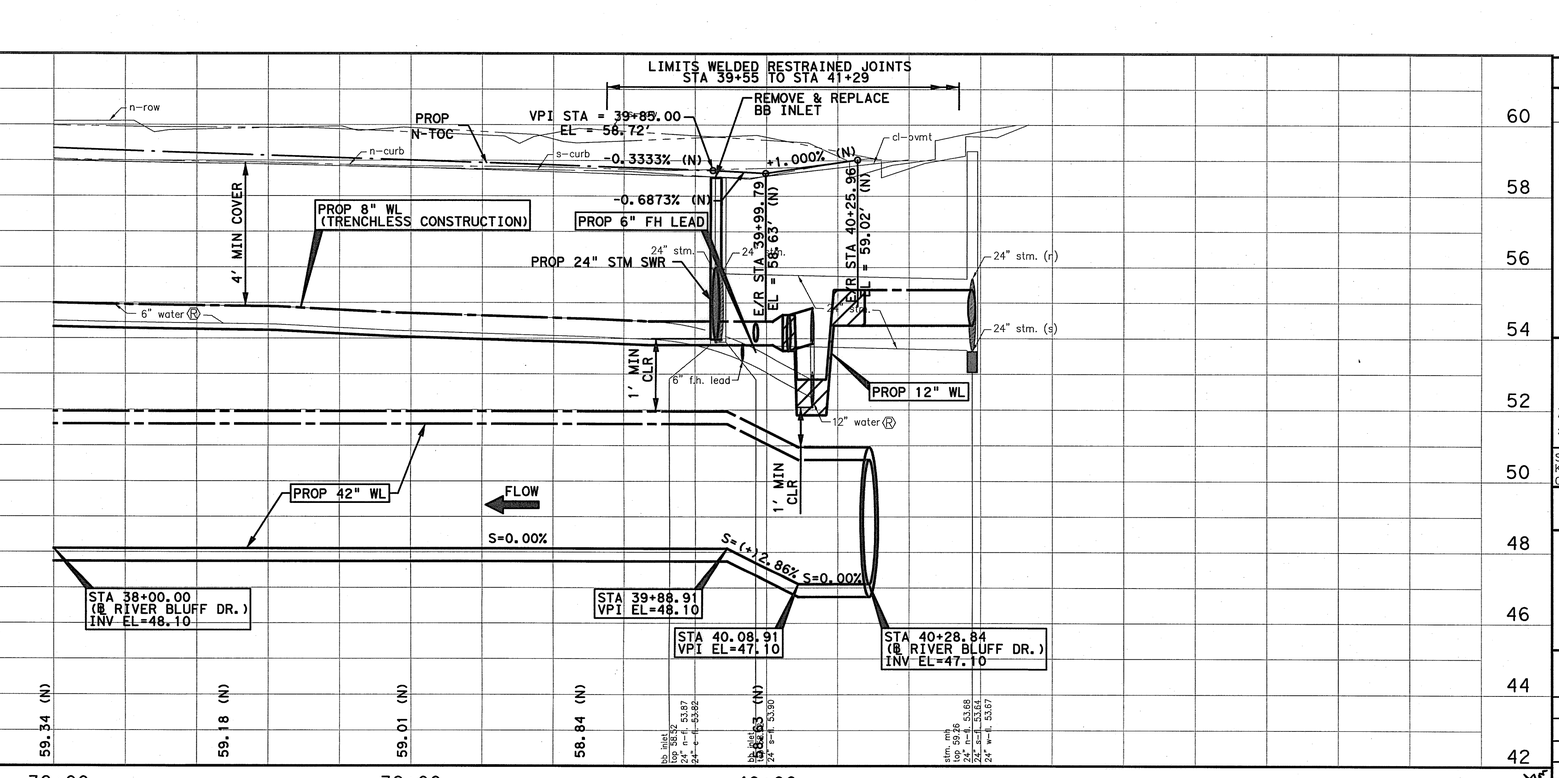

NOTICE:
AT LEAST 48 HOURS BEFORE EXCAVATION IN STREET R.O.W. OR EASEMENTS CALL THE LONE STAR NOTIFICATION 713-223-4567

PRIVATE UTILITY LINES SHOWN

CENTERPOINT ENERGY/ELECTRIC FACILITIES (APPROVED ONLY FOR CROSSING UNDERGROUND DUCTLINES UNLESS OTHERWISE NOTED.) VALID AT TIME OF REVIEW ONLY. Date: 1-6-11

CENTERPOINT ENERGY/GAS FACILITIES (GAS SERVICE LINES ARE NOT SHOWN) Date: 1-6-11

Approved for AT&T Texas/SBC underground conduit facilities only. SIGNATURE VALID FOR ONE YEAR Date:

CABLE COMPANY SIGNATURE VALID FOR ONE YEAR

Lockwood, Andrews & Newnam, Inc.
A LEO A DALY COMPANY
2925 Briarpark Drive Houston, TX 77042

SURVEYED BY:
KUO & ASSOCIATES, INC.
C.O.H. Field Book P-5554

STATE OF TEXAS
ALISA GRUBER
95685
LICENSED PROFESSIONAL ENGINEER
1-3-11
Lockwood, Andrews & Newnam, Inc. Firm No. 2614

CITY OF HOUSTON
DEPARTMENT OF PUBLIC WORKS AND ENGINEERING

SWTP CONTRACT 74A-1

PLAN & PROFILE
WATER LINE
STA 38+00 TO STA 40+51.65

SHEET 12 OF 25

WBS NO.
S-000900-0109-4

DRAWING SCALE
V: 1"=2' H: 1"=20'

CITY OF HOUSTON PM
ARTHUR C. MORRIS, P.E.

SHEET NO. 21 OF 91

ACCEPTED AND FILED
48326
CITY DRAWING NO.
HOUSTON, TEXAS

No.	Date	Revisions	App.

12/28/2010 4:25:02 PM jmusiolu

L:\1330-10337-004\4-0-Production\4-01-Drawings\Civil\10337-4-PP-ML-12.dgn

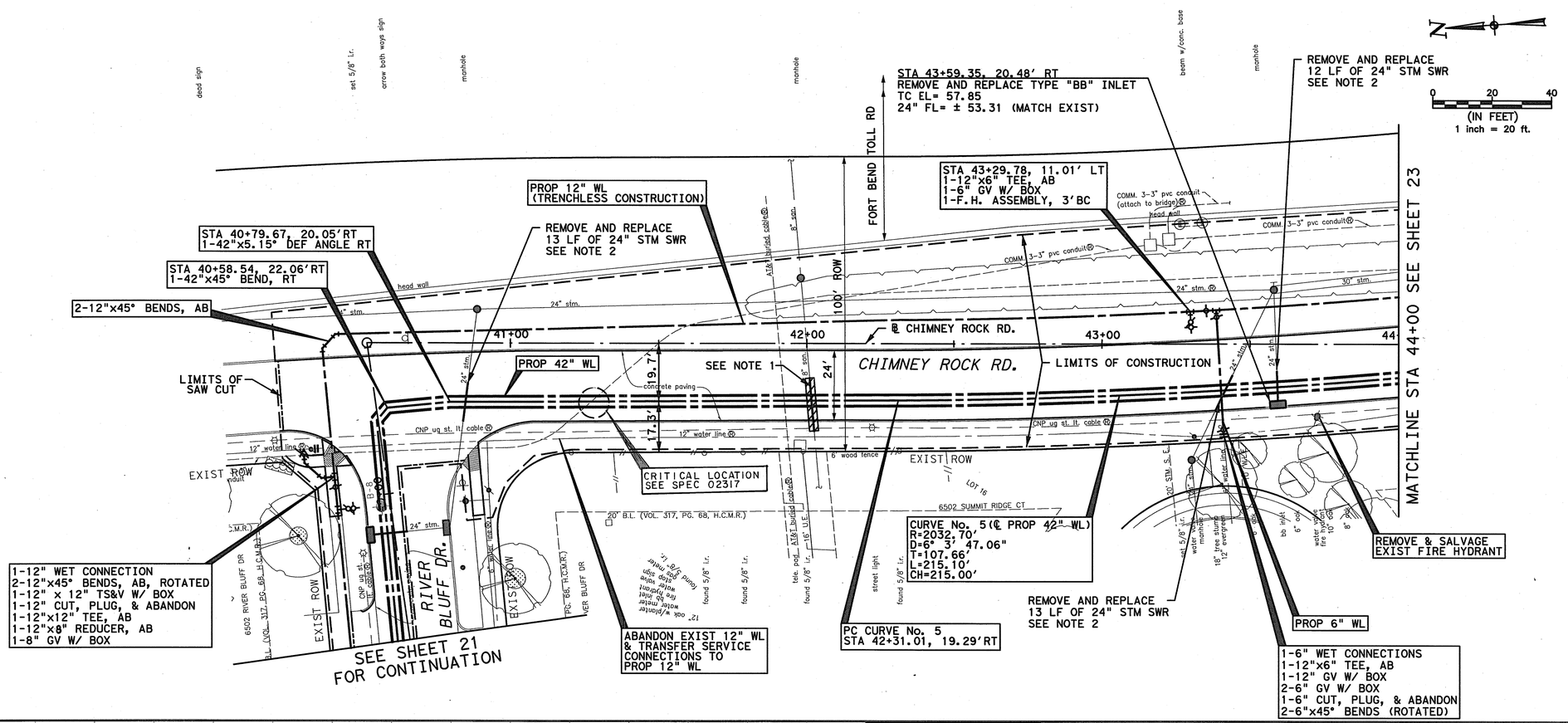

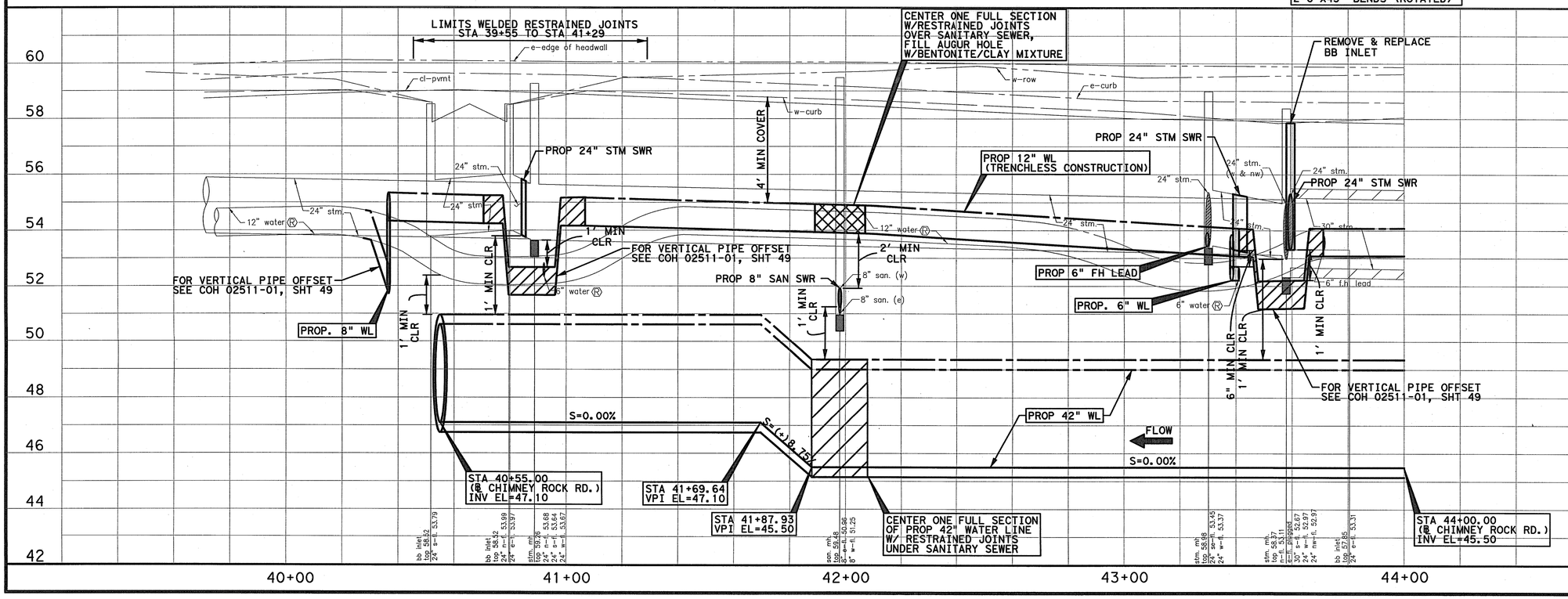

BENCHMARK:

CITY OF HOUSTON SURVEY MARKER 5151-7715, FLOODPLAIN REFERENCE MARK NUMBER 030130, A BRASS DISK STAMPED 030130 AN BRIDGE AT WEST OREM DRIVE (E-BOUND) AND SIMS BAYOU LOCATED ON DOWNSTREAM, SOUTH CONCRETE WALK, AT SE CORNER OF BRIDGE IN KEYMAP 571-K IN THE SIMS WATERSHED NEAR STREAM C156-00-00

ELEV. 60.47 FEET NAVD 1988, 2001 ADJUSTMENT

NOTE:

ALL HORIZONTAL COORDINATES ARE BASED ON TEXAS STATE COORDINATE SYSTEM, SOUTH CENTRAL ZONE NAD 83, 1993 ADJUSTMENT.

T.B.M.-110
SET 5/8" I.R. W/CAP LOCATED ON EAST SIDE OF RIVER BLUFF DR. AND CHIMNEY ROCK RD. INTERSECTION.
STA. 40+51.65
ELEV. =59.38'

NOTES:

1. REMOVE AND REPLACE 18 LF OF EXISTING 8" SAN SWR WITH PRESSURE RATED PIPE CENTERED ON 42" WATER LINE
2. MATCH EXISTING FLOWLINE ELEVATION SEE DETAIL 2, SHEET 39
3. FIBER OPTIC DUCT BANK OWNED BY TXDOT AND HARRIS COUNTY MAY ALSO EXIST WITHIN THE PROJECT LIMITS. THESE FIBER DUCT BANK ARE NOT PART OF THE TEXAS ONECALL SYSTEM. CONTACT TXDOT AND HARRIS COUNTY TO OBTAIN FIBER OPTIC DUCT BANK LOCATES AT THE FOLLOWING NUMBER: HARRIS COUNTY TRAFFIC SIGNAL HOTLINE - (713) 881-3210
4. ADJUST EXIST WATER VALVE/METER BOXES TO NEW GRADE. REPLACE ALL MISSING OR DAMAGED WATER VALVE/METER BOXES AND COVERS.

No.	Date	Revisions	App.

SWTP
Surface Water Transmission Program

NOTICE:
AT LEAST 48 HOURS BEFORE EXCAVATION IN STREET R.O.W. OR EASEMENTS CALL THE LONE STAR NOTIFICATION 713-223-4567

PRIVATE UTILITY LINES SHOWN

CENTERPOINT ENERGY/ELECTRIC FACILITIES
(APPROVED ONLY FOR CROSSING UNDERGROUND DUCTLINES UNLESS OTHERWISE NOTED.) VALID AT TIME OF REVIEW ONLY. Date: 1-6-11

CENTERPOINT ENERGY/GAS FACILITIES
(GAS SERVICE LINES ARE NOT SHOWN) Date: 1-6-11

Approved for AT&T Texas/SBC underground conduit facilities only. SIGNATURE VALID FOR ONE YEAR Date: 1-6-11

CABLE COMPANY
SIGNATURE VALID FOR ONE YEAR Date:

Lockwood, Andrews & Newnam, Inc.
A LEO A DALY COMPANY
2925 Briarpark Drive Houston, TX 77042

SURVEYED BY:
KUO & ASSOCIATES, INC.
C.O.H. Field Book P-5554

1-3-11
STATE OF TEXAS
ALISA GRUBER
95685
LICENSED PROFESSIONAL ENGINEER
Lockwood, Andrews & Newnam, Inc. Firm No. 2614

CITY OF HOUSTON
DEPARTMENT OF PUBLIC WORKS AND ENGINEERING

SWTP CONTRACT 74A-1

PLAN & PROFILE
WATER LINE
STA 40+51.65 TO STA 44+00

SHEET 13 OF 25

WBS NO.	S-000900-0109-4
DRAWING SCALE	V: 1"=2' H: 1"=20'
CITY OF HOUSTON PM	ARTHUR C. MORRIS, P.E.
SHEET NO.	22 OF 91

PUBLIC WORKS AND ENGINEERING
ACCEPTED AND FILED
48326
CITY DRAWING NUMBER
HOUSTON, TEXAS

L:\130-10337-0044\4-0-Product\on\4-01-Draw\Tega\C1\4\10337-4-PP-WL-13.dgn
12/28/2010 4:25:04 PM Jmusiolu

REMOVE AND REPLACE WHEELCHAIR RAMP SEE COH DETAIL 02775-02 (TYPICAL)

STA 46+30.07, 41.20' LT
1-12"x6" TEE, AB
1-6" GV W/ BOX
1-F.H. ASSEMBLY, 3'BC

PROP 77 LF - 12" WATER LINE W/ RESTRAINED JOINTS
1-12" WET CONNECTIONS
2-12" GV W/ BOX
2-12"x45° BENDS, AB
1-12" CUT, PLUG, & ABANDON
1-12"x12 TEE, AB

STA 47+54.63, 36.97'LT (℄ CHIMNEY ROCK RD.)
1-48" BFV W/OPERATOR MH
SEE DETAIL 1, SHT 44

PROP 12" WL (TRENCHLESS CONSTRUCTION)

REMOVE AND REPLACE 12 LF OF 24" STM SWR SEE NOTE 2

STA 46+42.62, 8.82' LT
REMOVE AND REPLACE TYPE "BB" INLET
TC EL= 59.00
24" FL= ± 53.27 (MATCH EXIST)

PROP 6 LF OF 18" RCP DRAIN LINE

SEE SHEET 24 FOR CONTINUATION

1-12" WET CONNECTIONS
1-12" GV W/ BOX
2-12"x45° BENDS, AB, ROTATED
1-12" CUT, PLUG, & ABANDON

REMOVE AND REPLACE 20 LF OF 36" STM SWR SEE NOTE 2

MATCHLINE STA 44+00 SEE SHEET 22

FORT BEND TOLL RD

100' ROW

℄ CHIMNEY ROCK RD.

CHIMNEY ROCK RD.
100' R.O.W.

WEST OREM DR.

LIMITS OF CONSTRUCTION

PROP 42" WL

SEE NOTE 1

EXIST ROW

6511 SUMMIT RIDGE CT
20' B.L. (VOL. 317, PG. 68, H.C.M.R.)

16' U.E. (VOL. 317, PG. 68, H.C.M.R.)

STA 46+20.00, 12.54'LT
1-ACCESS MANWAY W/SERVICE MH
SEE DETAIL 4, SHT 46

STA 46+32.00, 09.60'LT
DRAIN LINE VALVE W/SERVICE MH AND DRAIN LINE CONNECTION
18" FL EL=53.30
SEE DETAIL 5, SHT 44

STA 46+53.00, 16.21'LT
1-42" BFV W/OPERATOR MH
SEE DETAIL 1, SHT 44

REMOVE & SALVAGE EXIST FIRE HYDRANT

1-12" WET CONNECTION
1-12"x12" TEE, AB
2-12" GV W/ BOX
2-12"x45° BENDS, AB
1-12" CUT, PLUG, & ABANDON

STA 46+53.00
1-42" BFV W/OPERATOR MH
SEE DETAIL 1, SHT 44

REMOVE & REPLACE BB INLET

LIMITS OF SAW CUT

REMOVE AND REPLACE WHEELCHAIR RAMPS SEE DETAIL 1 SHEET 73

STA 47+46.32, 26.59'LT
(℄ CHIMNEY ROCK RD.)
1-48"x42" ECCENTRIC REDUCER, FLAT ON TOP

STA 47+55.66, 27.63'LT
(℄ CHIMNEY ROCK RD.)
1-48"x48" TEE
1-48" INTERNAL ELLIPTICAL DISHED HEAD PLUG
SEE DETAIL 5, SHT 42

STA 47+86.19, 26.50'LT
(℄ CHIMNEY ROCK RD.)
DRAIN LINE VALVE W/SERVICE MH AND DRAIN LINE CONNECTION
SEE DETAIL 5, SHT 44

PROP 29 LF OF 18" RCP DRAIN LINE

STA 47+65.61, 28.74'LT
(℄ CHIMNEY ROCK RD.)
1-ACCESS MANWAY W/SERVICE MH
SEE DETAIL 4, SHT 46

STA 47+65.61
(℄ CHIMNEY ROCK RD.)
1-ACCESS MANWAY W/SERVICE MH
SEE DETAIL 4, SHT 46

ABANDON EXIST 12" WL & TRANSFER SERVICE CONNECTIONS TO PROP 12" WL

PT CURVE No. 6
STA 44+45.64, 6.86'RT

BENCHMARK:

CITY OF HOUSTON SURVEY MARKER 5151-7715, FLOODPLAIN REFERENCE MARK NUMBER 030130, A BRASS DISK STAMPED 030130 AN BRIDGE AT WEST OREM DRIVE (E-BOUND) AND SIMS BAYOU LOCATED ON DOWNSTREAM, SOUTH CONCRETE WALK, AT SE CORNER OF BRIDGE IN KEYMAP 571-K IN THE SIMS WATERSHED NEAR STREAM C156-00-00

ELEV. 60.47 FEET NAVD 1988, *2001 ADJUSTMENT*

NOTE:

ALL HORIZONTAL COORDINATES ARE BASED ON TEXAS STATE COORDINATE SYSTEM, SOUTH CENTRAL ZONE NAD 83, 1993 ADJUSTMENT.

T.B.M.-112
SET 5/8" I.R. W/CAP LOCATED ON MEDIAN OF CHIMNEY ROCK RD. AND WEST OREM DR. INTERSECTION
STA. 47+20.99
ELEV. =59.52'

NOTES:

1. REMOVE AND REPLACE 18 LF OF EXISTING 8" SAN SWR WITH PRESSURE RATED PIPE CENTERED ON 42" WATER LINE
2. MATCH EXISTING FLOWLINE ELEVATION SEE DETAIL 2, SHEET 46
3. FIBER OPTIC DUCT BANK OWNED BY TXDOT AND HARRIS COUNTY MAY ALSO EXIST WITHIN THE PROJECT LIMITS. THESE FIBER DUCT BANK ARE NOT PART OF THE TEXAS ONECALL SYSTEM. CONTACT TXDOT AND HARRIS COUNTY TO OBTAIN FIBER OPTIC DUCT BANK LOCATES AT THE FOLLOWING NUMBER: HARRIS COUNTY TRAFFIC SIGNAL HOTLINE - (713) 881-3210
4. ADJUST EXIST WATER VALVE/METER BOXES TO NEW GRADE. REPLACE ALL MISSING OR DAMAGED WATER VALVE/METER BOXES AND COVERS.

CENTER ONE FULL SECTION W/RESTRAINED JOINTS OVER SANITARY SEWER, FILL AUGUR HOLE W/BENTONITE/CLAY MIXTURE

PROP 12" WL (TRENCHLESS CONSTRUCTION)

PROP 24" STM SWR
PROP 18" DRAIN LINE @ 0.5%

PROP 6" FH LEAD
FL EL=53.30
FL EL=±53.27

PROP 8" SAN SWR

PROP 42" WL

FLOW
S=0.00%

STA 44+00.00
(℄ CHIMNEY ROCK RD.)
INV EL=45.50

CENTER ONE FULL SECTION OF PROP 42" WATER LINE W/ RESTRAINED JOINTS UNDER SANITARY SEWER

STA 46+20.00
1-ACCESS MANWAY W/SERVICE MH
SEE DETAIL 4, SHT 46

STA 46+32.00
℄ DRAIN LINE VALVE W/SERVICE MH
SEE DETAIL 5, SHT 44

LIMITS WELDED RESTRAINED JOINTS STA 46+98 TO STA 51+26

STA 47+86.19
(℄ CHIMNEY ROCK RD.)
℄ DRAIN LINE VALVE W/SERVICE MH
SEE DETAIL 5, SHT 44

PROP 12" WL

PROP 36" STM SWR

FOR VERTICAL PIPE OFFSET SEE COH 02511-01, SHT 49

STA 47+46.32
1-48"x42" ECCENTRIC REDUCER

STA 47+55.66
1-48"x48" TEE

STA 48+01.53
(℄ CHIMNEY ROCK RD.)
INV EL=45.00

44+00 45+00 46+00 47+00 48+00

SWTP Surface Water Transmission Program

NOTICE
AT LEAST 48 HOURS BEFORE EXCAVATION IN STREET R.O.W. OR EASEMENTS CALL THE LONE STAR NOTIFICATION 713-223-4567

PRIVATE UTILITY LINES SHOWN

CENTERPOINT ENERGY/ELECTRIC FACILITIES (APPROVED ONLY FOR CROSSING UNDERGROUND DUCTLINES UNLESS OTHERWISE NOTED.) VALID AT TIME OF REVIEW ONLY. Date: 1-6-11

CENTERPOINT ENERGY/GAS FACILITIES (GAS SERVICE LINES ARE NOT SHOWN) Date: 1-6-11

Approved for AT&T Texas/SBC underground conduit facilities only. SIGNATURE VALID FOR ONE YEAR Date: 1-6-11

CABLE COMPANY SIGNATURE VALID FOR ONE YEAR Date:

Lockwood, Andrews & Newnam, Inc.
A LEO A DALY COMPANY
2925 Briarpark Drive Houston, TX 77042

STATE OF TEXAS — ALISA GRUBER — 95685 — LICENSED PROFESSIONAL ENGINEER — 1-3-11
Lockwood, Andrews & Newnam, Inc. Firm No. 2614

SURVEYED BY:
KUO & ASSOCIATES, INC.
C.O.H. Field Book P-5554

CITY OF HOUSTON
DEPARTMENT OF PUBLIC WORKS AND ENGINEERING

SWTP CONTRACT 74A-1

PLAN & PROFILE
WATER LINE
STA 44+00 TO STA 47+20.99

SHEET 14 OF 25

WBS NO.
S-000900-0109-4

DRAWING SCALE
V: 1"=2' H: 1"=20'

CITY OF HOUSTON PM
ARTHUR C. MORRIS, P.E.

SHEET NO. 23 OF 91

PUBLIC WORKS AND ENGINEERING — ACCEPTED AND FILED — 48326 — CITY DRAWING NUMBER — HOUSTON, TEXAS

No. Date Revisions App'd

12/28/2010 4:25:05 PM jmsaku

L:\130-10331-004\4-0-Production\4-01-Drawings\Civil\10331-4-PP-WL-14.dgn

SEE SHEET 23
FOR CONTINUATION

EXIST ROW
HARRIS COUNTY ROW
10' B.L. (VOL. 317, PG. 68, H.C.M.R.)
WEST OREM DR.
℄ WEST OREM DR.
CHIMNEY ROCK RD.
100' ROW
LIMITS OF SAW CUT
LIMITS OF CONSTRUCTION
concrete paving
4' conc. sidewalk
12" water line
42" san.
36" stm.
24" stm.
21" san.
18" san.
abandoned 18" san. (crushed)
abandoned 20" san. f.m.
4'x4'conc. column (typ.)
6'x6'conc. column
bb inlet
manhole
stop sign
two way traffic sign
road barrier
grate inlet
mh (not found)
set 5/8" i.r.
found 5/8" i.r.
water valve
fire hydrant
stop sign
w/st. name
18" metal pole
w/conc. base
control box
water valve
fiber optic cable box
elec. box
elec. conduit
c inlet
buried cable
47+00
48+00
49+00
50+00
51+00
48+20
100' R.O.W.
100' ROW
100' ROW

STA 47+42
FLUSH MOUNTED CASED
CROSSING TEST STATION
SEE DETAIL 5, SHT 53

CRITICAL LOCATION
SEE SPEC 02317

PROP. TYPE "C" MANHOLE
STA. 33+68.90, 12.5'LT
TR EL=59.35
24"FL= ± 53.72
(MATCH EXIST)

REMOVE AND REPLACE
14 LF OF 24" STM SWR
SEE NOTE 2

STA 48+00.00, 26.00' LT
REMOVE AND REPLACE TYPE "BB" INLET
TC EL= 59.18
24" FL= ± 53.94 (MATCH EXIST)
24" FL= ± 53.81 (MATCH EXIST)

REMOVE AND REPLACE
12 LF OF 24" STM SWR
SEE NOTE 2

STA 47+42.06, 84.33'RT
1-48"x76.42° BEND, LT

STA 47+48.54, 85.89'RT
END TUNNEL
SEE DETAIL 1, SHT 48

PROP 129 LF 48" WL
IN STEEL CASING
BY TUNNEL

STA 48+72.16, 119.98'RT
BEGIN TUNNEL
SEE DETAIL 1, SHT 48

STA 48+78.43, 121.70'RT
1-48"x45° BEND, RT

STA 48+72
FLUSH MOUNTED CASED
CROSSING TEST STATION
SEE DETAIL 5, SHT 53

B-7
B-6
CTS

C.W. ADAMS SURVEY, A-101
SOUTHWEST CROSSING, SEC. 7
BLOCK 10, VOL. 317, PG. 68, H.C.M.R.

ARTHUR S. FRIEDMAN, TRUSTEE TO
THIRD JOHN TWO FAMILY LIFE CENTER, INC.
H.C.C.F. NO. U366499 O.P.R.O.R.P.

THIRD JOHN TWO FAMILY LIFE CENTER, INC.
DEED RECORDS OF HARRIS COUNTY, TEXAS
H.C.C.F. NO. W198853
O.P.R.O.R.P.

UNRESTRICTED RESERVE B
UNRESTRICTED RESERVE C

HARRIS COUNTY ROW
EXIST ROW

SEE SHEET 26
FOR CONTINUATION

SEE SHEET 25 FOR PROFILE VIEW

N

0 20 40
(IN FEET)
1 inch = 20 ft.

BENCHMARK:

CITY OF HOUSTON SURVEY MARKER 5151-7715,
FLOODPLAIN REFERENCE MARK NUMBER 030130,
A BRASS DISK STAMPED 030130 AN BRIDGE
AT WEST OREM DRIVE (E-BOUND) AND SIMS BAYOU
LOCATED ON DOWNSTREAM, SOUTH CONCRETE
WALK, AT SE CORNER OF BRIDGE IN KEYMAP 571-K
IN THE SIMS WATERSHED NEAR STREAM C156-00-00

ELEV. 60.47 FEET NAVD 1988, 2001 ADJUSTMENT

NOTE:

ALL HORIZONTAL COORDINATES ARE BASED ON TEXAS
STATE COORDINATE SYSTEM, SOUTH CENTRAL ZONE
NAD 83, 1993 ADJUSTMENT.

T.B.M.-112
SET 5/8" I.R. W/CAP LOCATED ON MEDIAN OF
CHIMNEY ROCK RD. AND WEST OREM DR.
INTERSECTION
STA. 47+20.99
ELEV. =59.52'

T.B.M.-122
SET 1/2" I.R. W/CAP, LOCATED AT EAST
MEDIAN OF INTERSECTION OF WEST OREM DR.
AND CHIMNEY ROCK RD.
STA. 49+26.78
ELEV. =59.34'

NOTES:

1. FIBER OPTIC DUCT BANK OWNED BY TXDOT AND HARRIS COUNTY MAY ALSO EXIST WITHIN THE PROJECT LIMITS. THESE FIBER DUCT BANK ARE NOT PART OF THE TEXAS ONECALL SYSTEM. CONTACT TXDOT AND HARRIS COUNTY TO OBTAIN FIBER OPTIC DUCT BANK LOCATES AT THE FOLLOWING NUMBER: HARRIS COUNTY TRAFFIC SIGNAL HOTLINE - (713) 881-3210

2. MATCH EXISTING FLOWLINE ELEVATION
SEE DETAIL 2, SHEET 46

No.	Date	Revisions	App'd

SWTP
Surface Water Transmission Program

NOTICE:
AT LEAST 48 HOURS BEFORE EXCAVATION IN STREET R.O.W. OR EASEMENTS CALL THE LONE STAR NOTIFICATION 713-223-4567

PRIVATE UTILITY LINES SHOWN

Date: 1-6-11
CENTERPOINT ENERGY/ELECTRIC FACILITIES
(APPROVED ONLY FOR CROSSING UNDERGROUND DUCTLINES UNLESS OTHERWISE NOTED.) VALID AT TIME OF REVIEW ONLY.

Date: 1-6-11
CENTERPOINT ENERGY/GAS FACILITIES
(GAS SERVICE LINES ARE NOT SHOWN)

Date: 1-6-11
Approved for AT&T Texas/SBC underground conduit facilities only.
SIGNATURE VALID FOR ONE YEAR

Date:
CABLE COMPANY
SIGNATURE VALID FOR ONE YEAR

Lockwood, Andrews & Newnam, Inc.
A LEO A DALY COMPANY
2925 Briarpark Drive Houston, TX 77042

STATE OF TEXAS
ALISA GRUBER
95685
LICENSED PROFESSIONAL ENGINEER
1-3-11
Lockwood, Andrews & Newnam, Inc. Firm No. 2614

SURVEYED BY:
KUO & ASSOCIATES, INC.
C.O.H. Field Book P-5554

CITY OF HOUSTON
DEPARTMENT OF PUBLIC WORKS AND ENGINEERING

SWTP CONTRACT 74A-1
PLAN
WATER LINE
STA 47+20.99 TO
STA 49+26.78

SHEET 15 OF 25

WBS NO.	S-000900-0109-4
DRAWING SCALE	H: 1"=20'
CITY OF HOUSTON PM	ARTHUR C. MORRIS, P.E.
SHEET NO.	24 OF 91

PUBLIC WORKS AND ENGINEERING
ACCEPTED AND FILED
48926
CITY OF HOUSTON, TEXAS

12/28/2010

L:\130-1033-004\4-0-Production\Civil\01-Drawings\Civil\1033-4-PP-WL-15.dgn
jmusku
4:25:05 PM
12/28/2010

SEE SHEET 24 FOR PLAN VIEW

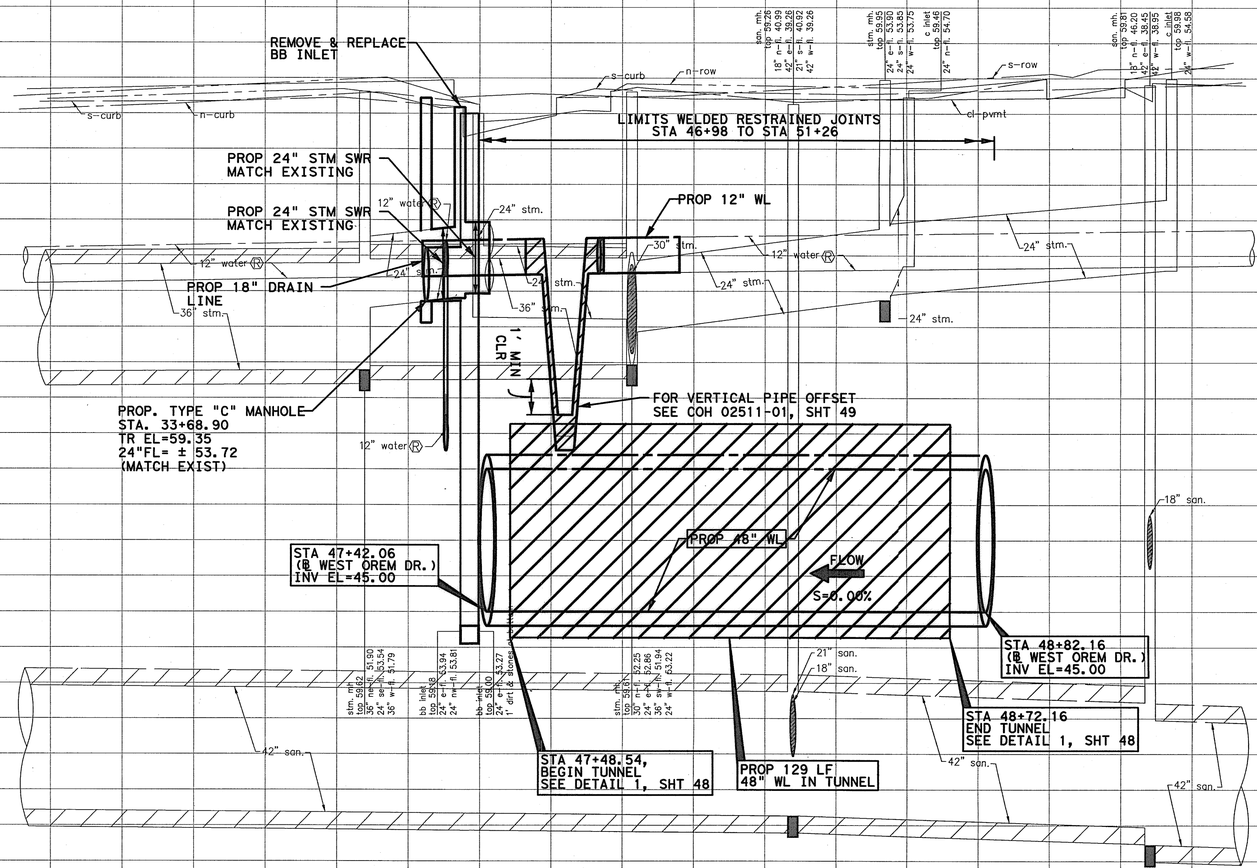

SWTP
Surface Water Transmission Program

NOTICE:
AT LEAST 48 HOURS BEFORE EXCAVATION IN STREET R.O.W. OR EASEMENTS CALL THE LONE STAR NOTIFICATION 713-223-4567

PRIVATE UTILITY LINES SHOWN

CENTERPOINT ENERGY/ELECTRIC FACILITIES
(APPROVED ONLY FOR CROSSING UNDERGROUND DUCTLINES UNLESS OTHERWISE NOTED.) VALID AT TIME OF REVIEW ONLY.
Date: 1-6-11

CENTERPOINT ENERGY/GAS FACILITIES
(GAS SERVICE LINES ARE NOT SHOWN)
Date: 1-6-11

Approved for AT&T Texas/SBC underground conduit facilities only.
SIGNATURE VALID FOR ONE YEAR
Date: 1-6-11

CABLE COMPANY
SIGNATURE VALID FOR ONE YEAR

Lockwood, Andrews & Newnam, Inc.
A LEO A DALY COMPANY
2925 Briarpark Drive Houston, TX 77042

SURVEYED BY:
KUO & ASSOCIATES, INC.
C.O.H. Field Book P-5554

STATE OF TEXAS
ALISA GRUBER
95685
LICENSED PROFESSIONAL ENGINEER
1-3-11
Lockwood, Andrews & Newnam, Inc. Firm No. 7614

CITY OF HOUSTON
DEPARTMENT OF PUBLIC WORKS AND ENGINEERING

SWTP CONTRACT 74A-1

PROFILE
WATER LINE
STA 47+20.99 TO
STA 49+26.78

SHEET 16 OF 25

WBS NO.	S-000900-0109-4
DRAWING SCALE	
V: 1"=2'	H: 1"=20'
CITY OF HOUSTON PM	ARTHUR C. MORRIS, P.E.
SHEET NO.	25 OF 91

ACCEPTED AND FILED
48326
CITY DRAWING NO.
HOUSTON TEXAS

No.	Date	Revisions	App'd

12/28/2010
4:25:06 PM
jmusiku
L:\1330-1037-0014-0-Product\Civil-01-Drawings\Civil\1037-4-PPWL-16.dgn

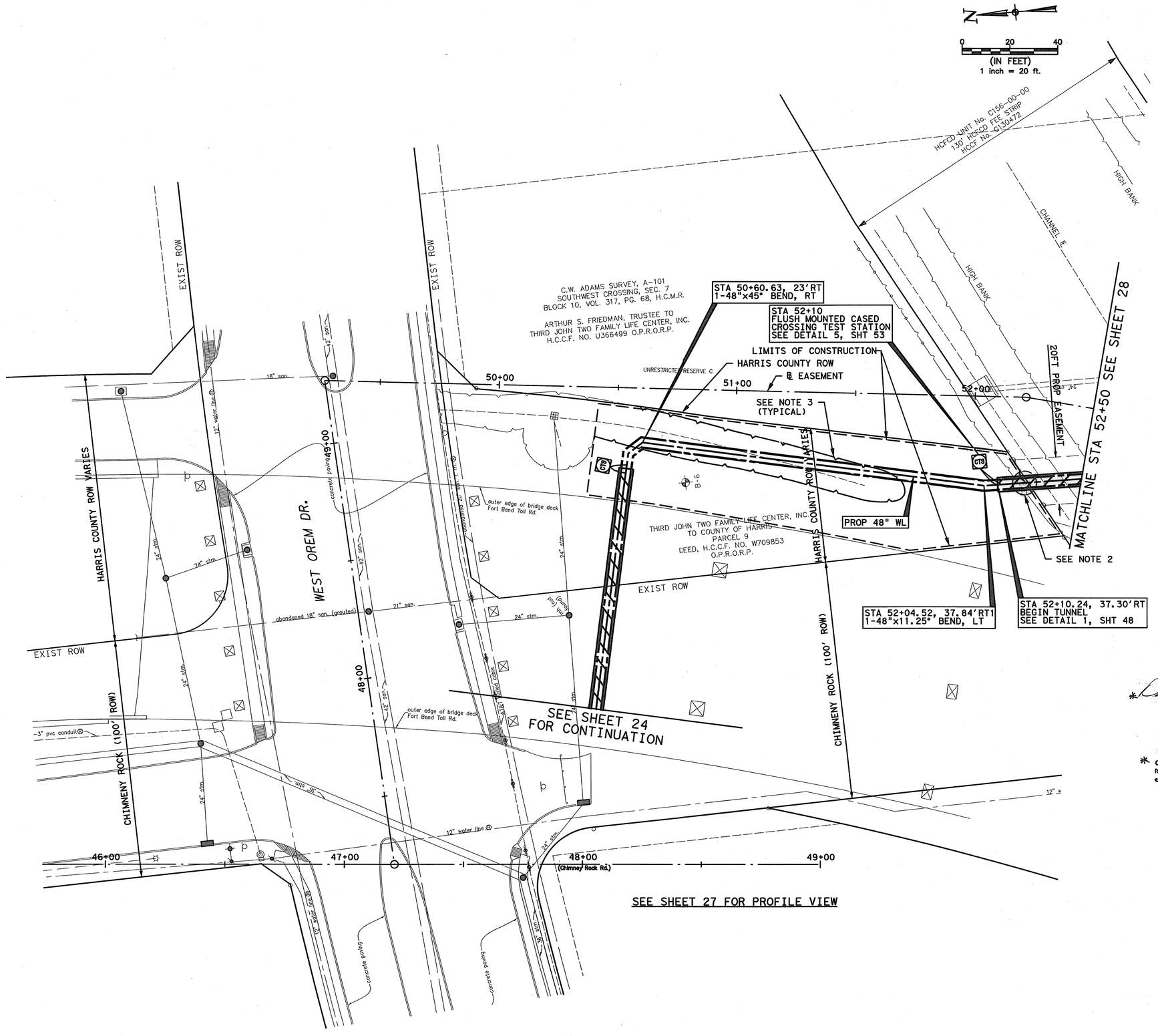

BENCHMARK:

CITY OF HOUSTON SURVEY MARKER 5151-7715, FLOODPLAIN REFERENCE MARK NUMBER 030130, A BRASS DISK STAMPED 030130 AN BRIDGE AT WEST OREM DRIVE (E-BOUND) AND SIMS BAYOU LOCATED ON DOWNSTREAM, SOUTH CONCRETE WALK, AT SE CORNER OF BRIDGE IN KEYMAP 571-K IN THE SIMS WATERSHED NEAR STREAM C156-00-00

ELEV. 60.47 FEET NAVD 1988, 2001 ADJUSTMENT

NOTE:

ALL HORIZONTAL COORDINATES ARE BASED ON TEXAS STATE COORDINATE SYSTEM, SOUTH CENTRAL ZONE NAD 83, 1993 ADJUSTMENT.

T.B.M.-113
COUNTY FLOOD CONTROL DISTRICT EASEMENT,
APPROX. 250' SOUTH OF W. OREM DR.
STA. 52+21.37
ELEV. =58.65'

NOTES:

1. FIBER OPTIC DUCT BANK OWNED BY TXDOT AND HARRIS COUNTY MAY ALSO EXIST WITHIN THE PROJECT LIMITS. THESE FIBER DUCT BANK ARE NOT PART OF THE TEXAS ONECALL SYSTEM. CONTACT TXDOT AND HARRIS COUNTY TO OBTAIN FIBER OPTIC DUCT BANK LOCATES AT THE FOLLOWING NUMBER: HARRIS COUNTY TRAFFIC SIGNAL HOTLINE - (713) 881-3210
2. DO NOT LOCATE TUNNEL SHAFT WITH IN HCFCD PROPERTY
3. REGRADE EXISTING DITCHES & SWALES TO EXISTING ELEVATIONS, FOR EXISTING GRADE INFORMATION SEE SHEET 39 TO SHEET 41

* Contractor may work within HCFCD Right-of-way only when waterline easement is required.

No.	Date	Revisions	App.

SWTP
Surface Water Transmission Program

NOTICE:
AT LEAST 48 HOURS BEFORE EXCAVATION IN STREET R.O.W. OR EASEMENTS CALL THE LONE STAR NOTIFICATION 713-223-4567

PRIVATE UTILITY LINES SHOWN

CENTERPOINT ENERGY/ELECTRIC FACILITIES — Date: 1-6-11
(APPROVED ONLY FOR CROSSING UNDERGROUND DUCTLINES UNLESS OTHERWISE NOTED.) VALID AT TIME OF REVIEW ONLY.

CENTERPOINT ENERGY/GAS FACILITIES — Date: 1-6-11
(GAS SERVICE LINES ARE NOT SHOWN)

Approved for AT&T Texas/SBC underground conduit facilities only. — Date: 1-6-11
SIGNATURE VALID FOR ONE YEAR

CABLE COMPANY — Date:
SIGNATURE VALID FOR ONE YEAR

Lockwood, Andrews & Newnam, Inc.
A LEO A DALY COMPANY
2925 Briarpark Drive Houston, TX 77042

1-3-11
STATE OF TEXAS
ALISA GRUBER
95685
LICENSED PROFESSIONAL ENGINEER
Lockwood, Andrews & Newnam, Inc
Firm No. 2614

SURVEYED BY:
KUO & ASSOCIATES, INC.
C.O.H. Field Book P-5554

CITY OF HOUSTON
DEPARTMENT OF PUBLIC WORKS AND ENGINEERING

SWTP CONTRACT 74A-1

PLAN
WATER LINE
STA 49+26.78 TO STA 52+50

SHEET 17 OF 25

WBS NO. S-000900-0109-4	
DRAWING SCALE	
H: 1"=20'	
CITY OF HOUSTON PM	
ARTHUR C. MORRIS, P.E.	
SHEET NO. 26 OF 91	

PUBLIC WORKS AND ENGINEERING
ACCEPTED AND FILED
48326
CITY DRAWING NO.
HOUSTON, TEXAS

12/28/2010 4:25:08 PM JTmurku

L:\1130-1033-904\4-0-Production\4-01-Drawings\C-11\1033-4-PP-WL-17.dgn

SEE SHEET 26 FOR PLAN VIEW

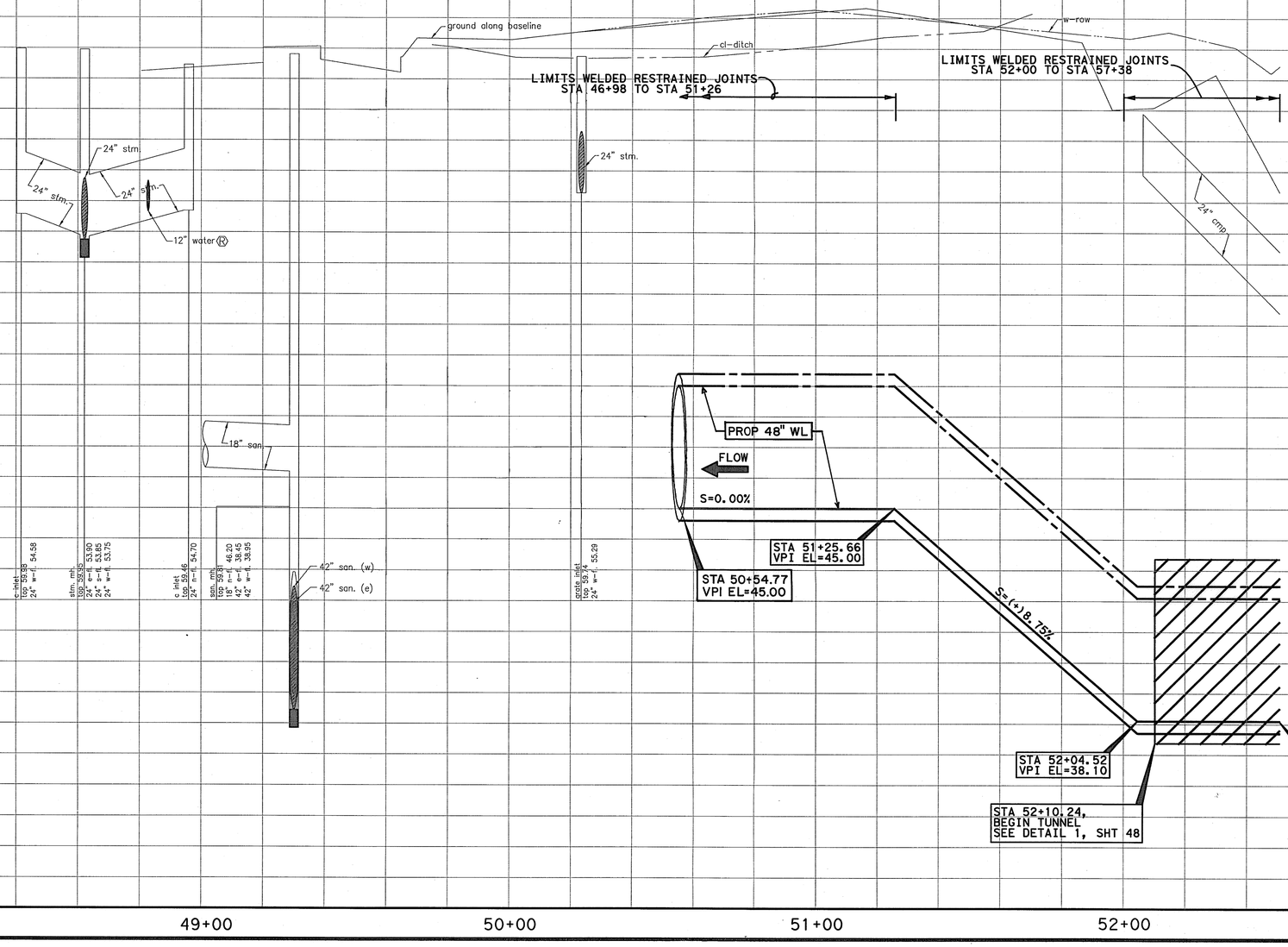

No.	Date	Revisions	App.

SWTP
Surface Water Transmission Program

NOTICE:
AT LEAST 48 HOURS BEFORE EXCAVATION IN STREET R.O.W. OR EASEMENTS CALL THE LONE STAR NOTIFICATION 713-223-4567

PRIVATE UTILITY LINES SHOWN

Date: 1-6-11
CENTERPOINT ENERGY/ELECTRIC FACILITIES
(APPROVED ONLY FOR CROSSING UNDERGROUND DUCTLINES UNLESS OTHERWISE NOTED.) VALID AT TIME OF REVIEW ONLY.

Date: 1-6-11
CENTERPOINT ENERGY/GAS FACILITIES
(GAS SERVICE LINES ARE NOT SHOWN)

Date: 1-6-11
Approved for AT&T Texas/SBC underground conduit facilities only.
SIGNATURE VALID FOR ONE YEAR

Date:
CABLE COMPANY
SIGNATURE VALID FOR ONE YEAR

LAN
Lockwood, Andrews & Newnam, Inc.
A LEO A DALY COMPANY
2925 Briarpark Drive Houston, TX 77042

1-3-11
STATE OF TEXAS
ALISA GRUBER
95685
LICENSED PROFESSIONAL ENGINEER
Lockwood, Andrews & Newnam, Inc. Firm No. 2614

SURVEYED BY:
KUO & ASSOCIATES, INC.
C.O.H. Field Book P-5554

CITY OF HOUSTON
DEPARTMENT OF PUBLIC WORKS AND ENGINEERING

SWTP CONTRACT 74A-1

PROFILE
WATER LINE
STA 49+26.78 TO STA 52+50

SHEET 18 OF 25

WBS NO.	S-000900-0109-4
DRAWING SCALE	
V: 1"=2'	H: 1"=20'
CITY OF HOUSTON PM	
ARTHUR C. MORRIS, P.E.	
SHEET NO. 27 OF 91	

PUBLIC WORKS AND ENGINEERING
ACCEPTED AND FILED
48326
CITY OF HOUSTON
HOUSTON, TEXAS

12/28/2010 4:25:09 PM jmusiku
L:\1130-10237-004\4-0-Production\04\4-01-Drawings\Civil\10237-4-PPWL-18.dgn

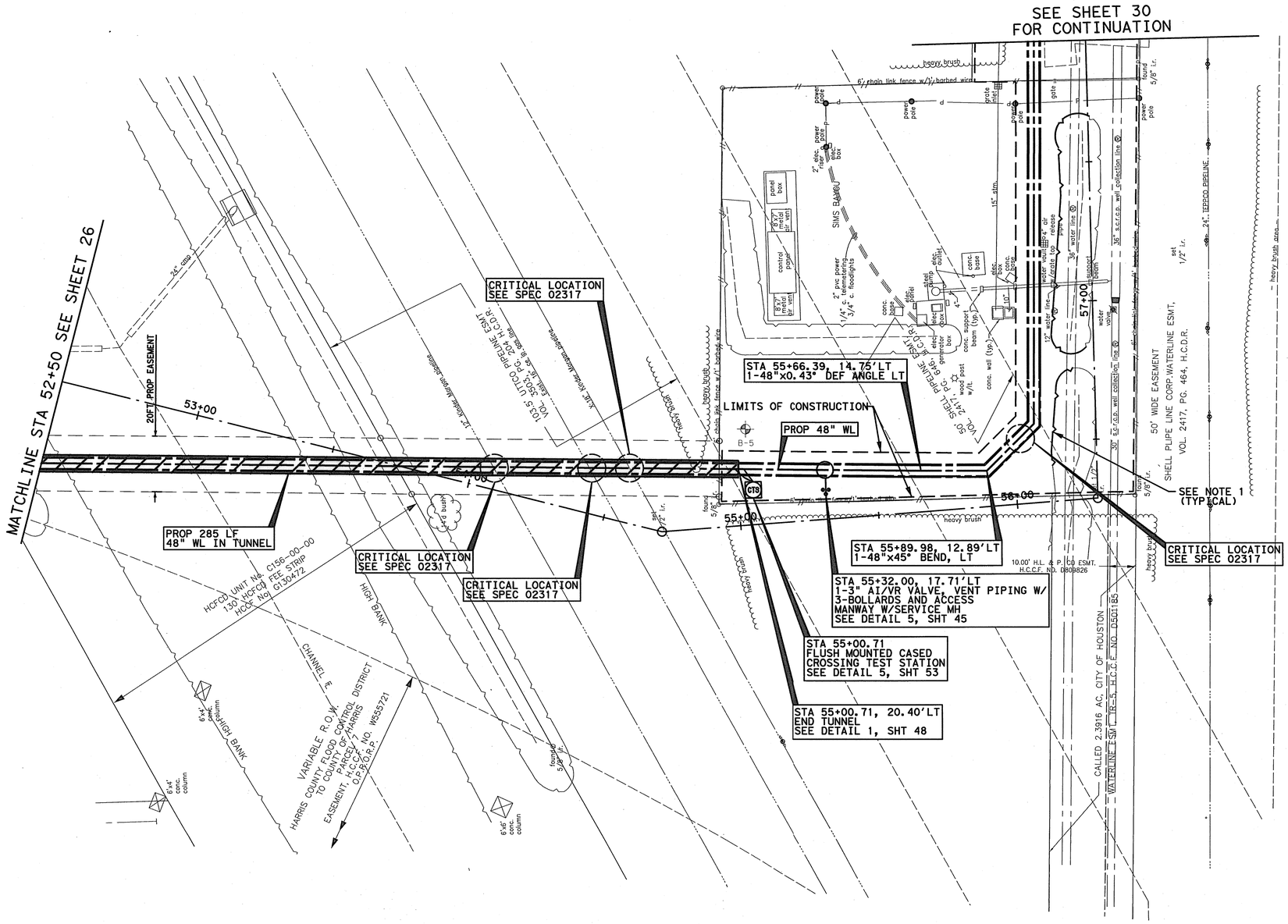

SEE SHEET 29 FOR PROFILE VIEW

N

0 20 40
(IN FEET)
1 inch = 20 ft.

BENCHMARK:

CITY OF HOUSTON SURVEY MARKER 5151-7715,
FLOODPLAIN REFERENCE MARK NUMBER 030130,
A BRASS DISK STAMPED 030130 AN BRIDGE
AT WEST OREM DRIVE (E-BOUND) AND SIMS BAYOU
LOCATED ON DOWNSTREAM, SOUTH CONCRETE
WALK, AT SE CORNER OF BRIDGE IN KEYMAP 571-K
IN THE SIMS WATERSHED NEAR STREAM C156-00-00

ELEV. 60.47 FEET NAVD 1988, 2001 ADJUSTMENT

NOTE:

ALL HORIZONTAL COORDINATES ARE BASED ON TEXAS
STATE COORDINATE SYSTEM, SOUTH CENTRAL ZONE
NAD 83, 1993 ADJUSTMENT.

T.B.M.-114
SET ½" I.R. LOCATED IN UTTCO PIPELINE ESMT,
APPROX. 22' NW OF CITY OF HOUSTON
SIMS BAYOU PUMP STATION #2.
STA. 54+71.57
ELEV. =57.80'

T.B.M.-123
SET ½" I.R. W/CAP, LOCATED AT SW CORNER
OF CITY OF HOUSTON SIMS BAYOU PUMP STATION #2.
STA. 56+28.86
ELEV. =57.59'

NOTES:

1. REGRADE EXISTING DITCHES & SWALES TO EXISTING ELEVATIONS, FOR EXISTING GRADE INFORMATION SEE SHEET 39 TO SHEET 41

No.	Date	Revisions	App'd

SWTP
Surface Water Transmission Program

NOTICE:
AT LEAST 48 HOURS BEFORE EXCAVATION IN STREET R.O.W. OR EASEMENTS CALL THE LONE STAR NOTIFICATION 713-223-4567

PRIVATE UTILITY LINES SHOWN

CENTERPOINT ENERGY/ELECTRIC FACILITIES Date: 1-6-11
(APPROVED ONLY FOR CROSSING UNDERGROUND DUCTLINES UNLESS OTHERWISE NOTED.) VALID AT TIME OF REVIEW ONLY.

CENTERPOINT ENERGY/GAS FACILITIES Date: 1-6-11
(GAS SERVICE LINES ARE NOT SHOWN)

Approved for AT&T Texas/SBC underground Date: 1-6-11
conduit facilities only.
SIGNATURE VALID FOR ONE YEAR

CABLE COMPANY Date:
SIGNATURE VALID FOR ONE YEAR

Lockwood, Andrews & Newnam, Inc.
A LEO A DALY COMPANY
2925 Briarpark Drive Houston, TX 77042

SURVEYED BY:
KUO & ASSOCIATES, INC.
C.O.H. Field Book P-5554

1-3-11
STATE OF TEXAS
ALISA GRUBER
95685
LICENSED PROFESSIONAL ENGINEER
Lockwood, Andrews & Newnam, Inc.
Firm No. 2614

CITY OF HOUSTON
DEPARTMENT OF PUBLIC WORKS AND ENGINEERING

SWTP CONTRACT 74A-1

PLAN
WATER LINE
STA 52+50 TO STA 56+28.86

SHEET 19 OF 25

WBS NO.	S-000900-0109-4
DRAWING SCALE	H: 1"=20'
CITY OF HOUSTON PM	ARTHUR C. MORRIS, P.E.
SHEET NO.	28 OF 91

PUBLIC WORKS AND ENGINEERING
ACCEPTED AND FILED
48326
CITY DRAWING NUMBER
HOUSTON TEXAS

12/28/2010

L:\1130-10337-004\4-0-Product\on\4-01-Drawings\C1\1\10337-4-PP-WL-19.dgn
4:25:10 PM
jmsaku

SEE SHEET 28 FOR PLAN VIEW

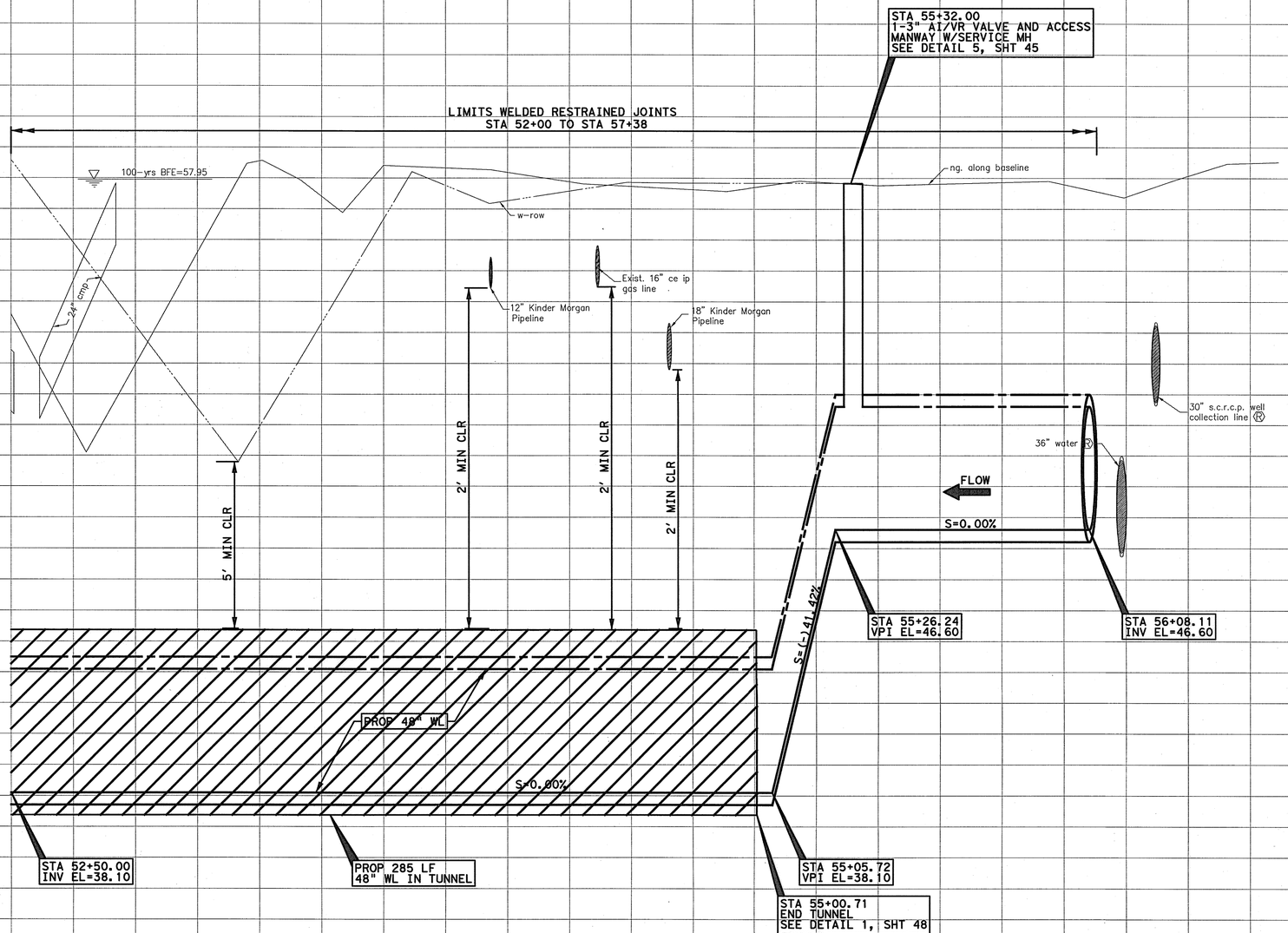

No.	Date	Revisions	App.

SWTP
Surface Water Transmission Program

NOTICE:
AT LEAST 48 HOURS BEFORE EXCAVATION IN STREET R.O.W. OR EASEMENTS CALL THE LONE STAR NOTIFICATION 713-223-4567

PRIVATE UTILITY LINES SHOWN

CENTERPOINT ENERGY/ELECTRIC FACILITIES
(APPROVED ONLY FOR CROSSING UNDERGROUND DUCTLINES UNLESS OTHERWISE NOTED.) VALID AT TIME OF REVIEW ONLY.
Date: 1-6-11

CENTERPOINT ENERGY/GAS FACILITIES
(GAS SERVICE LINES ARE NOT SHOWN)
Date: 1-6-11

Approved for AT&T Texas/SBC underground conduit facilities only.
SIGNATURE VALID FOR ONE YEAR
Date: 1-6-11

CABLE COMPANY
SIGNATURE VALID FOR ONE YEAR
Date:

Lockwood, Andrews & Newnam, Inc.
A LEO A DALY COMPANY
2925 Briarpark Drive Houston, TX 77042

SURVEYED BY:
KUO & ASSOCIATES, INC.
C.O.H. Field Book P-5554

1-6-11
STATE OF TEXAS
ALISA GRUBER
95685
LICENSED PROFESSIONAL ENGINEER
Lockwood, Andrews & Newnam, Inc. Firm No. 2614

CITY OF HOUSTON
DEPARTMENT OF PUBLIC WORKS AND ENGINEERING

SWTP CONTRACT 74A-1

PROFILE
WATER LINE
STA 52+50 TO STA 56+28.86

SHEET 20 OF 25

WBS NO.	S-000900-0109-4
DRAWING SCALE	
V: 1"=2'	H: 1"=20'
CITY OF HOUSTON PM	
ARTHUR C. MORRIS, P.E.	
SHEET NO.	29 OF 91

PUBLIC WORKS AND ENGINEERING
ACCEPTED AND FILED
48326
CITY SECRETARY OF HOUSTON, TEXAS

12/28/2010
4:25:11 PM
jmusiku
L:\130-10337-0044-0-Product\enV-01-Drawings\Civil\10337-4-PPL-20.dgn

SEE SHEET 28 FOR CONTINUATION

NOTES:

1. NOTIFY CITY OF HOUSTON A MINIMUM OF SEVEN (7) DAYS PRIOR TO REMOVAL & REPLACEMENT OF FENCE. WELL SITE SHALL REMAIN SECURE THROUGHOUT CONSTRUCTION
2. SUPPORT 84" STM SWR AS REQUIRED FOR CONSTRUCTION
3. USE CAUTION WORKING ADJACENT TO WELL SITE #2. PROTECT AND SUPPORT EXISTING 12" WATERLINE AND APPURTENANCES AS REQUIRED TO FACILITATE CONSTRUCTION ACTIVITIES. ANTICIPATE 1" PVC CHLORINE INJECTION LINE AND ELECTRICAL CONDUIT FOR FLOW INJECTOR WITHIN LIMITS OF CONSTRUCTION. CRITICAL LOCATE CHLORINE INJECTION LINE AND ELECTRICAL CONDUIT IN ACCORDANCE WITH SPEC SEC 02317. REMOVE AND REPLACE CONCRETE SUPPORTS AS REQUIRED, SEE DETAIL 3 SHEET 48.

BENCHMARK:

CITY OF HOUSTON SURVEY MARKER 5151-7715, FLOODPLAIN REFERENCE MARK NUMBER 030130, A BRASS DISK STAMPED 030130 AN BRIDGE AT WEST OREM DRIVE (E-BOUND) AND SIMS BAYOU LOCATED ON DOWNSTREAM, SOUTH CONCRETE WALK, AT SE CORNER OF BRIDGE IN KEYMAP 571-K IN THE SIMS WATERSHED NEAR STREAM C156-00-00

ELEV. 60.47 FEET NAVD 1988, 2001 ADJUSTMENT

NOTE:

ALL HORIZONTAL COORDINATES ARE BASED ON TEXAS STATE COORDINATE SYSTEM, SOUTH CENTRAL ZONE NAD 83, 1993 ADJUSTMENT.

T.B.M. -116
SET 1/2" I.R., LOCATED ON THE SOUTH SIDE OF GRAVEL DRIVE, APPROX. 185' WEST OF CITY OF HOUSTON SIMS BAYOU PUMP STATION #2.
STA. 59+66.50
ELEV. =58.12'

NOTES:

4. PRIOR TO BEGINNING CONSTRUCTION OF 48" WATER LINE, FIELD VERIFY LOCATION OF AIR VALVE CONNECTION TO EXISTING 36" WATER LINE. REMOVE AND RELOCATE AIR VALVE, CONCRETE VAULT AND VENT PIPING A MINIMUM OF 2" SOUTH AS REQUIRED TO CONSTRUCT PROPOSED 48" WATERLINE. RECONNECT AIR VALVE TO EXISTING PIPING.
5. REGRADE EXISTING DITCHES & SWALES TO EXISTING ELEVATIONS, FOR EXISTING GRADE INFORMATION SEE SHEET 39 TO SHEET 41
6. STA 56+00 TO STA 75+49.30 MAINTAIN ACCESS BETWEEN SIMS AND WELL SITE # 2. PROVIDE TEMP PAVING, MATS OR OTHER MEANS TO PROTECT EXIST 36" WL AND 36" WELL COLLECTION LINE FROM CONSTRUCTION LOADING & CITY MAINTANANCE VEHICLES UNTIL PERMANENT ACCESS ROAD IS RESTORED

MATCHLINE STA 61+00 SEE SHEET 31

STA 56+56.14, 22.19'LT
1-48"x45° BEND, LT

CRITICAL LOCATION SEE SPEC 02317

REMOVE & REPLACE 40 LF OF FENCE SEE NOTE 1

BRACE POWER POLE

SEE NOTE 3

SEE NOTE 2

SEE NOTE 4

SEE NOTE 5 (TYPICAL)

CRITICAL LOCATION SEE SPEC 02317

STA 59+65.00, 13.94'LT
1-3" AI/VR VALVE, VENT PIPING W/ 3-BOLLARDS AND ACCESS MANWAY W/SERVICE MH
SEE DETAIL 5, SHT 45

PROP 48" WL

LIMITS OF CONSTRUCTION

@ COH PROPERTY

60' COH PROPERTY

50' WIDE EASEMENT SHELL PLIPE LINE CORP. WATERLINE ESMT, VOL. 2417, PG. 464, H.C.D.R.

50' SHELL PIPELINE ESMT VOL. 2417, PG. 646, H.C.D.R.

95' HARRIS COUNTY FLOOD CONTROL DISTRICT ESM'T VOL. 2272, PG. 642 H.C.D.R.

10.00' S.W. BELL TEL. ESMT. VOL. 5760, PG. 413 H.C.D.R.

5.00' H.L. & P. CO ESMT VOL. 7284, PG. 576 H.C.D.R.

10.00' H.L. & P. CO ESMT H.C.C.F. NO. D509826

CALLED 0.5168 AC CITY OF HOUSTON DEED, TR-3 H.C.C.F. NO. D501185

CALLED 0.1723 AC CITY OF HOUSTON DEED, TR-4 H.C.C.F. NO. D501185

SIMS BAYOU PUMP STATION WELL SITE #2

HCFCD UNIT No. C100-00-00 200' HCFCD EASEMENT HCF No. B541027

30' WIDE SHELL PIPELINE ESMT. VOL. 2448, PG. 197 H.C.D.R.

24" TEPPCO PIPELINE

STA 59+65.00
1-3" AI/VR VALVE AND ACCESS MANWAY W/SERVICE MH
SEE DETAIL 5, SHT 45

LIMITS WELDED RESTRAINED JOINTS
STA 52+00 TO STA 57+38

10' MIN CLR

3' MIN CLR

2' MIN CLR

PROP 48" WL

FLOW

S=0.00%

S=-0.75%

S=-0.75%

S=0.00%

STA 56+46.51
INV EL=46.60

STA 58+14.99
VPI EL=46.60

STA 58+70.94
VPI EL=41.70

STA 58+90.94
VPI EL=41.70

STA 59+59.46
VPI EL=47.70

STA 61+00.00
INV EL=47.70

SBC 2-4" steel pipes Ⓡ

57+00 58+00 59+00 60+00 61+00

SWTP
Surface Water Transmission Program

NOTICE:
AT LEAST 48 HOURS BEFORE EXCAVATION IN STREET R.O.W. OR EASEMENTS CALL THE LONE STAR NOTIFICATION 713-223-4567

PRIVATE UTILITY LINES SHOWN

CENTERPOINT ENERGY/ELECTRIC FACILITIES (APPROVED ONLY FOR CROSSING UNDERGROUND DUCTLINES UNLESS OTHERWISE NOTED.) VALID AT TIME OF REVIEW ONLY. Date: 1-6-11

CENTERPOINT ENERGY/GAS FACILITIES (GAS SERVICE LINES ARE NOT SHOWN) Date: 1-6-11

Approved for AT&T Texas/SBC underground conduit facilities only. SIGNATURE VALID FOR ONE YEAR Date:

CABLE COMPANY SIGNATURE VALID FOR ONE YEAR

Lockwood, Andrews & Newnam, Inc.
A LEO A DALY COMPANY
2925 Briarpark Drive Houston, TX 77042

ALISA GRUBER 95685 LICENSED PROFESSIONAL ENGINEER
Lockwood, Andrews & Newnam, Inc Firm No. 2614

SURVEYED BY:
KUO & ASSOCIATES, INC.
C.O.H. Field Book P-5554

CITY OF HOUSTON
DEPARTMENT OF PUBLIC WORKS AND ENGINEERING

SWTP CONTRACT 74A-1

PLAN & PROFILE
WATER LINE
STA 56+28.86 TO STA 61+00

SHEET 21 OF 25

WBS NO. S-000900-0109-4

DRAWING SCALE
V: 1"=2' H: 1"=20'

CITY OF HOUSTON PM
ARTHUR C. MORRIS, P.E.

SHEET NO. 30 OF 91

48326 CITY DRAINAGE ENGINEER HOUSTON, TEXAS

No.	Date	Revisions	App.

12/28/2010 4:25:13 PM jmusku

L:\1130-1033-00\V4-0-Production\V4-01-Drawings\S1\1130331-49-ML-21.dgn

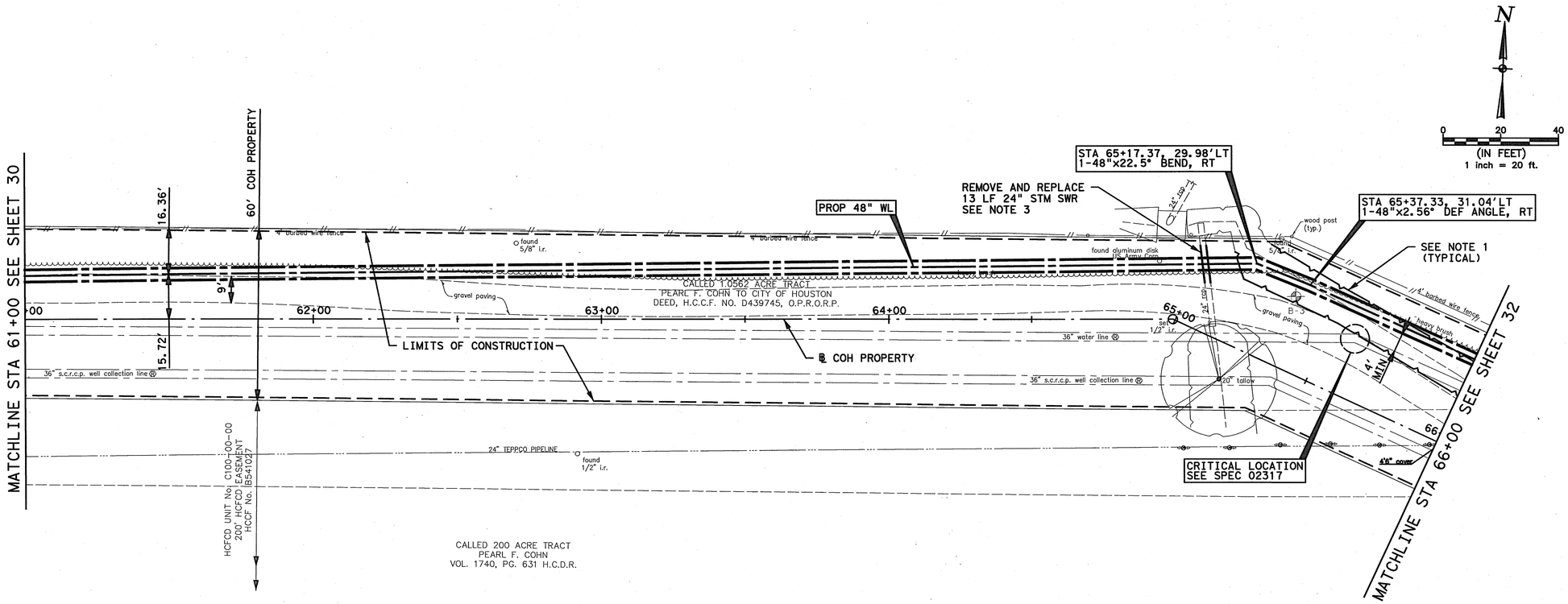

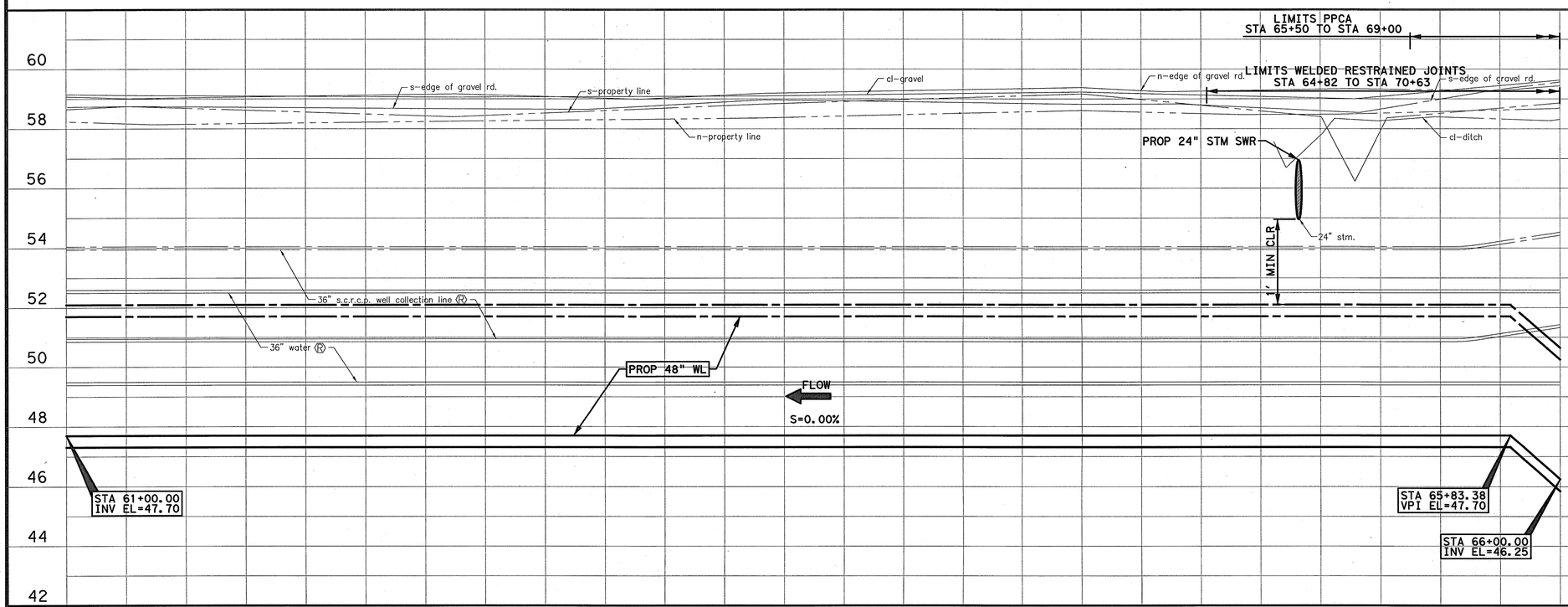

BENCHMARK:

CITY OF HOUSTON SURVEY MARKER 5151-7715, FLOODPLAIN REFERENCE MARK NUMBER 030130, A BRASS DISK STAMPED 030130 AN BRIDGE AT WEST OREM DRIVE (E-BOUND) AND SIMS BAYOU LOCATED ON DOWNSTREAM, SOUTH CONCRETE WALK, AT SE CORNER OF BRIDGE IN KEYMAP 571-K IN THE SIMS WATERSHED NEAR STREAM C156-00-00

ELEV. 60.47 FEET NAVD 1988, 2001 ADJUSTMENT

NOTE:

ALL HORIZONTAL COORDINATES ARE BASED ON TEXAS STATE COORDINATE SYSTEM, SOUTH CENTRAL ZONE NAD 83, 1993 ADJUSTMENT.

T.B.M.-117
SET ½" I.R., LOCATED ON THE SOUTH SIDE OF GRAVEL DRIVE, APPROX. 715' WEST OF CITY OF HOUSTON SIMS BAYOU PUMP STATION #2.
STA. 64+99.16
ELEV.=58.07'

NOTES:

1. REGRADE EXISTING DITCHES & SWALES TO EXISTING ELEVATIONS, FOR EXISTING GRADE INFORMATION SEE SHEET 39 TO SHEET 41
2. STA 56+00 TO STA 75+49.30 MAINTAIN ACCESS BETWEEN SIMS AND WELL SITE # 2. PROVIDE TEMP PAVING, MATS OR OTHER MEANS TO PROTECT EXIST 36"WL AND 36" WELL COLLECTION LINE FROM CONSTRUCTION LOADING & CITY MAINTANANCE VEHICLES UNTIL PERMANENT ACCESS ROAD IS RESTORED.
3. MATCH EXISTING FLOWLINE ELEVATION SEE DETAIL 2, SHEET 46

No.	Date	Revisions	App.

SWTP
Surface Water Transmission Program

NOTICE:
AT LEAST 48 HOURS BEFORE EXCAVATION IN STREET R.O.W. OR EASEMENTS CALL THE LONE STAR NOTIFICATION 713-223-4567

PRIVATE UTILITY LINES SHOWN

CENTERPOINT ENERGY/ELECTRIC FACILITIES Date: 1-6-11
(APPROVED ONLY FOR CROSSING UNDERGROUND DUCTLINES UNLESS OTHERWISE NOTED.) VALID AT TIME OF REVIEW ONLY.

CENTERPOINT ENERGY/GAS FACILITIES Date: 1-6-11
(GAS SERVICE LINES ARE NOT SHOWN)

Approved for AT&T Texas/SBC underground conduit facilities only. Date: 1-6-11
SIGNATURE VALID FOR ONE YEAR

CABLE COMPANY Date:
SIGNATURE VALID FOR ONE YEAR

Lockwood, Andrews & Newnam, Inc.
A LEO A DALY COMPANY
2925 Briarpark Drive Houston, TX 77042

SURVEYED BY:
KUO & ASSOCIATES, INC.
C.O.H. Field Book P-5554

1-3-11
STATE OF TEXAS
ALISA GRUBER
95685
LICENSED PROFESSIONAL ENGINEER
Lockwood, Andrews & Newnam, Inc Firm No. 2614

CITY OF HOUSTON
DEPARTMENT OF PUBLIC WORKS AND ENGINEERING

SWTP CONTRACT 74A-1

PLAN & PROFILE
WATER LINE
STA 61+00 TO STA 66+00

SHEET 22 OF 25

WBS NO.	S-000900-0109-4
DRAWING SCALE	
V: 1"=2'	H: 1"=20'
CITY OF HOUSTON PM	
ARTHUR C. MORRIS, P.E.	
SHEET NO.	31 OF 91

PUBLIC WORKS AND ENGINEERING
ACCEPTED AND FILED
48326
CITY DRAWING NUMBER
HOUSTON, TEXAS

12/28/2010
4:25:13 PM
jmusiku
L:\130-10337-0041-0-Production\4-01-Drawings\C1\1\10337-4-PP-WL-22.dgn

MATCHLINE STA 66+00 SEE SHEET 31

MATCHLINE STA 71+00 SEE SHEET 33

STA 66+22
FLUSH MOUNTED CASED CROSSING AND FOREIGN LINE TEST STATION
SEE DETAIL 3, SHT 55

STA 67+32
FLUSH MOUNTED CASED CROSSING TEST STATION
SEE DETAIL 5, SHT 53

STA 66+22.00, 31.78'LT
END TUNNEL
SEE DETAIL 1, SHT 48

STA 67+32.00, 32.74'LT
BEGIN TUNNEL
SEE DETAIL 1, SHT 48

CRITICAL LOCATION
SEE SPEC 02317

PROP 110 LF
48" WL IN TUNNEL

CRITICAL LOCATION
SEE SPEC 02317

STA 67+78.00, 33.14'LT
1-3" AI/VR VALVE, VENT PIPING W/
3-BOLLARDS AND ACCESS
MANWAY W/SERVICE MH
SEE DETAIL 5, SHT 45

STA 67+90.23, 33.25'LT
1-48"x22.5° BEND, LT

STA 68+19.10, 45.50'LT
1-48"x22.5° BEND, RT

CRITICAL LOCATION
SEE SPEC 02317

COH PROPERTY LINE

STA 69+75.72, 46.87'LT
1-48"x45° BEND, RT

STA 69+75
FLUSH MOUNTED CASED CROSSING TEST STATION
SEE DETAIL 5, SHT 53

PROP 48" WL

LIMITS OF CONSTRUCTION

STA 70+65
PROVIDE FLANGE ADAPTER AND INSULATING KIT. INSTALL FLUSH MOUNTED FLANGE ISOLATION AND ANODE TEST STATION
SEE DETAIL 1, SHT 55

STA 70+65, 14.50'LT
BEGIN 48" STEEL WL
W/ FULLY WELDED JOINTS

STA 69+79.87, 42.78'LT
BEGIN TUNNEL
SEE DETAIL 1, SHT 48

PROP 35 LF
48" WL IN TUNNEL

CRITICAL LOCATION
SEE SPEC 02317

SEE NOTE 3
(TYPICAL)

CRITICAL LOCATION
SEE SPEC 02317

STA 70+04.84, 18.24'LT
END TUNNEL
SEE DETAIL 1, SHT 48

STA 70+09.00, 14.16'LT
1-48"x45° BEND, LT

STA 70+09
FLUSH MOUNTED CASED CROSSING AND FOREIGN LINE TEST STATION
SEE DETAIL 3, SHT 55

REMOVE & REPLACE
40 LF OF FENCE
SEE NOTE 1.

REMOVE AND REPLACE
12 LF OF 24" STM SWR
SEE NOTE 2

STA 70+39.00, 14.42' LT
1-3" AI/VR VALVE, VENT PIPING W/
3-BOLLARDS AND ACCESS
MANWAY W/SERVICE MH
SEE DETAIL 5, SHT 45

STA 70+39.00
1-3" AI/VR VALVE AND ACCESS
MANWAY W/SERVICE MH
SEE DETAIL 5, SHT 45

CRITICAL LOCATION
SEE SPEC 02317

HCFCD UNIT No. C100-00-00
200' HCFD EASEMENT
HCCF No. B541027

wood post (typ.)
o-fence gate
24" TEPPCO PIPELINE
wood post (typ.)
barbed wire
hedge brush
water manhole
air release pipe
36" water line
36" s.c.r.c.p. well collection line
gravel paving
found 3/4" i.r.
found aluminum disk
set 1/2" i.r.
B-2
B-1
B.d. bush
Communication line
gate
tele. manhole
light w/camera
found aluminum disc

60' COH PROPERTY
33.00'
4' MIN
10'

0 20 40
(IN FEET)
1 inch = 20 ft.

BENCHMARK:

CITY OF HOUSTON SURVEY MARKER 5151-7715, FLOODPLAIN REFERENCE MARK NUMBER 030130, A BRASS DISK STAMPED 030130 AN BRIDGE AT WEST OREM DRIVE (E-BOUND) AND SIMS BAYOU LOCATED ON DOWNSTREAM, SOUTH CONCRETE WALK, AT SE CORNER OF BRIDGE IN KEYMAP 571-K IN THE SIMS WATERSHED NEAR STREAM C156-00-00

ELEV. 60.47 FEET NAVD 1988, 2001 ADJUSTMENT

NOTE:

ALL HORIZONTAL COORDINATES ARE BASED ON TEXAS STATE COORDINATE SYSTEM, SOUTH CENTRAL ZONE NAD 83, 1993 ADJUSTMENT.

T.B.M.-119
SET ⅝" I.R. W/CAP, LOCATED ON THE SOUTH SIDE OF GRAVEL DRIVE INSIDE CITY OF HOUSTON WATER PLANT SITE, APPROX. 55' WEST OF EAST FENCE.
STA. 71+19.52
ELEV.=58.20'

NOTES:

1. NOTIFY CITY OF HOUSTON A MINIMUM OF SEVEN (7) DAYS PRIOR TO REMOVAL & REPLACEMENT OF FENCE. PLANT SITE SHALL REMAIN SECURE THROUGHOUT CONSTRUCTION.
2. MATCH EXISTING FLOWLINE ELEVATION SEE DETAIL 2, SHEET 46
3. REGRADE EXISTING DITCHES & SWALES TO EXISTING ELEVATIONS, FOR EXISTING GRADE INFORMATION SEE SHEET 39 TO SHEET 41
4. STA 56+00 TO STA 75+49.30 MAINTAIN ACCESS BETWEEN SIMS AND WELL SITE # 2. PROVIDE TEMP PAVING, MATS OR OTHER MEANS TO PROTECT EXIST 36"WL AND 36" WELL COLLECTION LINE FROM CONSTRUCTION LOADING & CITY MAINTANANCE VEHICLES UNTIL PERMANENT ACCESS ROAD IS RESTORED.

LIMITS PPCA
STA 65+50 TO STA 69+00

LIMITS WELDED RESTRAINED JOINTS
STA 64+82 TO STA 70+65

cl-gravel
n-edge of gravel rd.
s-edge of gravel rd.
s-property line
n-property line
cl-ditch
24" TEPPCO pipeline
36" s.c.r.c.p. well collection line
36" water
12" rcp
24" rcp
PROP 24" STM SWR
1' MIN CLR
2' MIN CLR

STA 70+65
BEGIN 48" STEEL WL W/ FULLY WELDED JOINTS

PROP 48" WL
PROP 35 LF
48" WL IN TUNNEL
FLOW
S=0.00%
S=(+)8.75%
S=(-)8.75%
S=(+)41.42
S=(-)41.42

STA 66+00.00
INV EL=46.25
STA 66+17.00
VPI EL=44.76
STA 66+22.00
BEGIN TUNNEL
SEE DETAIL 1, SHT 48
PROP 110 LF
48" WL IN TUNNEL
STA 67+32.00
END TUNNEL
SEE DETAIL 1, SHT 48
STA 66+70.60
VPI EL=47.70
STA 67+37.00
VPI EL=44.76
water mh
top 60.62
top of 2" i.p. 57.13
top of 8"vave 56.42
top of 8" vave 56.42
top of 2" stl. pipe 57.07
bottom 53.22
STA 69+57.56
VPI EL=47.70
STA 69+79.87
BEGIN TUNNEL
SEE DETAIL 1, SHT 48
STA 69+75.72
VPI EL=40.53
STA 70+04.84
END TUNNEL
SEE DETAIL 1, SHT 48
STA 70+09.00
VPI EL=40.53
STA 70+26.91
VPI EL=47.60
STA 71+00.00
INV EL=47.60

66+00 67+00 68+00 69+00 70+00 71+00

SWTP
Surface Water Transmission Program

NOTICE:
AT LEAST 48 HOURS BEFORE EXCAVATION IN STREET R.O.W. OR EASEMENTS CALL THE LONE STAR NOTIFICATION 713-223-4567

PRIVATE UTILITY LINES SHOWN

CENTERPOINT ENERGY/ELECTRIC FACILITIES Date: 1-6-11
(APPROVED ONLY FOR CROSSING UNDERGROUND DUCTLINES UNLESS OTHERWISE NOTED.) VALID AT TIME OF REVIEW ONLY.

CENTERPOINT ENERGY/GAS FACILITIES Date: 1-6-11
(GAS SERVICE LINES ARE NOT SHOWN)

Approved for AT&T Texas/SBC underground conduit facilities only. Date: 1-6-11
SIGNATURE VALID FOR ONE YEAR

CABLE COMPANY Date:
SIGNATURE VALID FOR ONE YEAR

Lockwood, Andrews & Newnam, Inc.
A LEO A DALY COMPANY
2925 Briarpark Drive Houston, TX 77042

SURVEYED BY:
KUO & ASSOCIATES, INC.
C.O.H. Field Book P-5554

1-3-11
STATE OF TEXAS
ALISA GRUBER
95685
LICENSED PROFESSIONAL ENGINEER
Lockwood, Andrews & Newnam, Inc Firm No. 2614

CITY OF HOUSTON
DEPARTMENT OF PUBLIC WORKS AND ENGINEERING

SWTP CONTRACT 74A-1

PLAN & PROFILE
WATER LINE
STA 66+00 TO STA 71+00

SHEET 23 OF 25

WBS NO.	S-000900-0109-4
DRAWING SCALE	
V: 1"=2'	H: 1"=20'
CITY OF HOUSTON PM	ARTHUR C. MORRIS, P.E.
SHEET NO.	32 OF 91

ACCEPTED AND FILED
48326
CITY ENGINEER
HOUSTON, TEXAS

No.	Date	Revisions	App'd

12/28/2010 4:25:14 PM jmusku

L:\1300-1037-004\4-0-Product\ent\4-01-drawings\1\1037-4-PP-WL-23.dgn

BENCHMARK:

CITY OF HOUSTON SURVEY MARKER 5151-7915,
¾" IRON ROD W/3" DIA BRASS CAP IN CONCRETE, INSIDE SIMS BAYOU WATER PLANT AT 13840 CROQUET,
AT NORTHEAST CORNER OF SITE.
KEY MAP: 571-K

ELEV. 57.75 FEET NAVD 1988, (2002 ADJUSTMENT)

NOTE:

ALL HORIZONTAL COORDINATES ARE BASED ON TEXAS STATE COORDINATE SYSTEM, SOUTH CENTRAL ZONE NAD 83, 1993 ADJUSTMENT.

T.B.M.-120
SET 5/8" I.R. W/CAP, LOCATED INSIDE CITY OF HOUSTON WATER PLANT SITE, APPROX. 68' SOUTHWEST OF BUILDING.
ELEV.=58.28'

NOTES:

1. WATER PLANT SITE SHALL REMAIN SECURE THROUGHOUT CONSTRUCTION.
2. ALL 48"/36" WATER LINE WITHIN THE FENCED PUMP STATION BOUNDARIES SHALL CONSIST OF STEEL PIPE W/WELDED RESTRAINED JOINTS.
3. ISOLATION VALVES LOCATED WITHIN THE FENCED PUMP STATION BOUNDARIES SHALL OPEN LEFT (COUNTERCLOCKWISE).
4. SEE SHEETS 37 AND 38 FOR CONNECTION TO EXIST PUMP STATION DISCHARGE PIPING WITHIN PUMP DISCHARGE BAY.
5. PROPOSED WATERLINE WITHIN SIMS PS PROPERTY BOUNDARIES, STA. 70+65 TO STA. 75+38, MAINTAIN MINIMUM 2.5-FT COVER FROM TOP OF PROPOSED WATERLINE TO FINISHED GRADE. MAINTAIN MINIMUM 1-FT VERTICAL SEPARATION BETWEEN PROPOSED WATERLINE, EXISTING WATERLINES, AND STORM SEWERS, UNLESS OTHERWISE NOTED.

(IN FEET)
1 inch = 20 ft.

MATCHLINE STA 71+00 SEE SHEET 31

STA 74+36, 41.8' LT
PROPOSED LOW PROFILE 3" AIR VALVE ASSEMBLY
SEE DETAIL 4, SHEET 45.

CUT, PLUG, AND ABANDON 20" WATERLINE AS REQUIRED. NO SEPARATE PAY.

INSTALL FLUSH MOUNTED FOREIGN LINE TEST STATION.
SEE DETAIL 3, SHEET 53

REMOVE AND REPLACE GRAVEL ACCESS ROAD

PROP 48" STEEL WL W/WELDED RESTRAINED JOINTS FROM STA 70+65.00 TO STA 75+18

STA 73+73.32, 12.2'LT
1-48"x25° BEND

CRITICAL LOCATION SEE SPEC 02317

STA 75+37, 71'LT
1-36" WL WALL PENETRATION AT EXIST PUMP DISCHARGE BAY
(SEE NOTE 4)

PROP 36" STEEL WL W/WELDED RESTRAINED JOINTS

STA 75+24, 75.4'LT
1-36"x36" TEE

STA 75+20, 76'LT
1-36" BFV W/OPERATOR MH
(SEE NOTE 3)

STA 75+18, 77' LT
1-48"x36" ECCENTRIC REDUCER
(FLAT ON BOTTOM)

STA 75+14, 78'LT
1-48"x45° BEND

STA 75+21, 67.3'LT
1-36"x45° BEND

PROP 36" STEEL WL W/WELDED RESTRAINED JOINTS FROM STA 75+18 TO STA 75+37

STA 75+00, 72.1' LT
1-ACCESS MANWAY W/ SERVICE MH
SEE DETAIL 4, SHT 46

PROVIDE FLANGE ADAPTER AND INSULATING KIT. INSTALL FLUSH MOUNTED FLANGE ISOLATION AND ANODE TEST STATION.
SEE DETAIL 1, SHEET 55.

STA 75+22, 71'LT
1-36" BFV W/OPERATOR MH
(SEE NOTE 3)

STA 75+24, 60.8'LT
1-36"x36" TEE

STA 75+20, 58' LT
1-ACCESS MANWAY W/ SERVICE MH
SEE DETAIL 4, SHT 46

REMOVE ±26 LF EXIST 36" WL

PROP 36" STEEL WL W/WELDED RESTRAINED JOINTS

CRITICAL LOCATION SEE SPEC 02317

HCFCD UNIT No. C100-00-00
200' HCFCD EASEMENT
HCCF No. B541027

SEE SHEET 34 FOR PROFILE VIEW

SWTP
Surface Water Transmission Program

Lockwood, Andrews & Newnam, Inc.
A LEO A DALY COMPANY
2925 Briarpark Drive Houston, TX 77042

SURVEYED BY:
KUO & ASSOCIATES, INC.
C.O.H. Field Book P-5554

STATE OF TEXAS
WILLIAM W. WILSHIRE III
94193
LICENSED PROFESSIONAL ENGINEER
1/12/11
Lockwood, Andrews & Newnam, Inc. Firm No. 2614

CITY OF HOUSTON
DEPARTMENT OF PUBLIC WORKS AND ENGINEERING

SWTP CONTRACT 74A-1

PLAN
WATER LINE
STA 71+00 TO STA 75+49.29

SHEET 24 OF 25

WBS NO.	S-000900-0109-4
DRAWING SCALE	H: 1"=20'
CITY OF HOUSTON PM	ARTHUR C. MORRIS, P.E.
SHEET NO.	33 OF 91

PUBLIC WORKS AND ENGINEERING
ACCEPTED AND FILED
48336
CITY DRAWING NO.
HOUSTON, TEXAS

No. Date Revisions App'd

1/12/2011 3:01:33 PM arenas

L:\130-10337-004\4-Production\4-01-Drawings\GIV\10337-4-PP-ML-24.dgn

SEE SHEET 33 FOR PLAN VIEW

NOTE:
EXISTING UTILITY PROFILE & NATURAL GROUND PROVIDED FOR INFORMATION ONLY AND HAVE NOT BEEN FIELD VERIFIED. ELEVATIONS ARE EXTRAPOLATED/ESTIMATED FROM THE FOLLOWING PROJECT RECORD DRAWINGS: CITY OF HOUSTON DRAWING NO. WP0067-2, SIMS BAYOU WATER SYSTEM IMPROVEMENTS PUMPING STATION, WD PROJECT NO. 6939, CONTRACT NO. 2

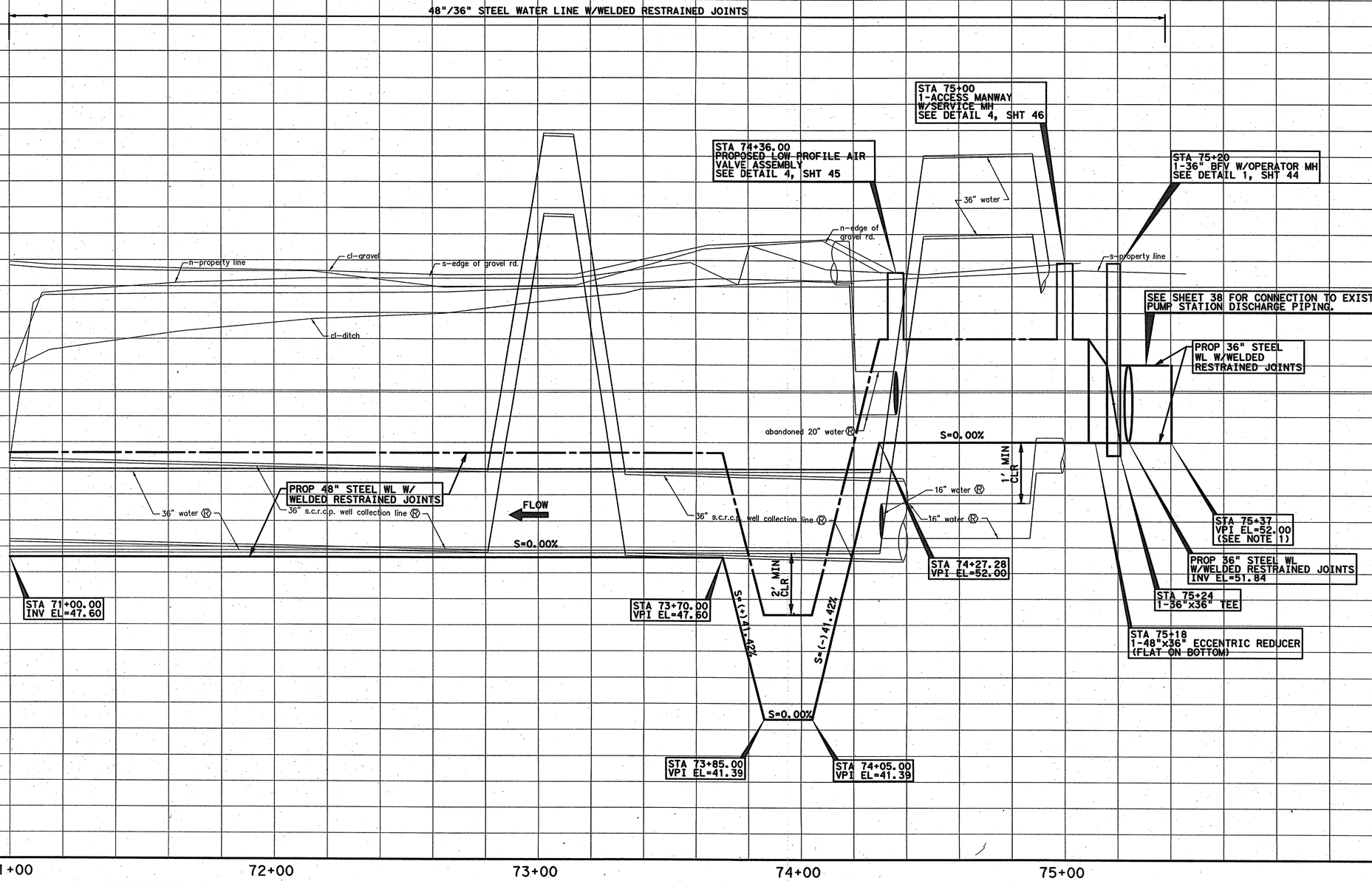

NOTE:

1. FIELD VERIFY INVERT ELEVATION OF EXISTING 36" PUMP STATION DISCHARGE PIPING WITHIN PUMP DISCHARGE BAY. PROPOSED 36" STEEL WATER LINE INVERT ELEVATIONS SHALL MATCH EXISTING 36" WATER LINE INVERT ELEVATIONS WITHIN DISCHARGE BAY.
2. PERFORM CRITICAL LOCATES TO DETERMINE ELEVATION OF EXISTING WATERLINE AT PROPOSED CONNECTIONS. ALLOW FOR POSSIBLITY THAT PROPOSED WATERLINE ELEVATION AT CONNECTION LOCATIONS WILL EXCEED 6-FT COVER. NO ADDITIONAL PAY.
3. CONTRACTOR SHALL USE CAUTION CROSSING EXISTING 36-INCH DISCHARGE WATERLINE AT APPROXIMATE STA. 73+95, ANTICIPATE DEPTHS GREATER THAN 16-FEET AT CROSSING. BRACE AND PROTECT 36-INCH DISCHARGE WATERLINE AS REQUIRED. NO EXTRA PAY.

No. Date Revisions Appd.

SWTP
Surface Water Transmission Program

Lockwood, Andrews & Newnam, Inc.
A LEO A DALY COMPANY
2925 Briarpark Drive Houston, TX 77042

STATE OF TEXAS
WILLIAM M. WILSHIRE III
94193
LICENSED PROFESSIONAL ENGINEER
1/12/11
Lockwood, Andrews & Newnam, Inc. Firm No. 2614

SURVEYED BY:
KUO & ASSOCIATES, INC.
C.O.H. Field Book P-5554

CITY OF HOUSTON
DEPARTMENT OF PUBLIC WORKS AND ENGINEERING

SWTP CONTRACT 74A-1

PROFILE
WATER LINE
STA 71+00 TO STA 75+49.29

SHEET 25 OF 25

WBS NO.
S-000900-0109-4

DRAWING SCALE
V: 1"=2' H: 1"=20'

CITY OF HOUSTON PM
ARTHUR C. MORRIS, P.E.

SHEET NO. 34 OF 91

PUBLIC WORKS AND ENGINEERING
ACCEPTED AND FILED
48326
CITY OF HOUSTON, TEXAS

1/12/2011
3:03:21 PM erames
L:\130-10337-004\1-0-Production\4-01-Drawings\Civil\10337-4-PP-ML-25.dgn

NOTES:

1. ACCESS ROAD FROM PUMP STATION TO CROQUET MUST REMAIN UNBLOCKED. PLANT OPERATION HOURS: 24HRS/DAY.
2. INSTALL TEMPORARY SECURITY FENCE BEFORE REMOVAL OF EXISTING PERIMETER FENCE AND INSTALLATION OF PIPE. TEMPORARY FENCE TO BE LOCATED TO PROVIDE ADEQUATE WORK SPACE FOR INSTALLING PIPE AND SECURING SITE.
3. REGRADE EXISTING DITCHES TO ELEVATIONS SHOWN AND/OR AS DIRECTED BY THE PROJECT MANAGER.
4. REGRADE CONTRACTOR'S LAY-DOWN AREA FOR POSITIVE DRAINAGE AND PROTECT SODDING PER SPEC 02922.
5. RESTORE ALL DISTURBED AREAS TO ORIGINAL OR BETTER CONDITION.
6. PERFORM CRITICAL LOCATES PRIOR TO SUBMITTAL OF PIPE LAY SCHEDULE.
7. LOCATIONS AND IDENTIFCATIONS OF EXISTING UNDERGROUND UTILITY LINES ARE BASED ON RECORD DRAWINGS AND NOT GUARANTEED TO BE COMPLETE OR ACCURATE. CHLORINE (CL2), AMMONIA (NH3), ELECTRICAL LINE, DRAIN LINES, C.P. LINES, AND FUEL LINES ARE PRESENT ON SITE. DETERMINE LOCATIONS BEFORE COMMENCING WORK. NO EXTRA PAY.
8. REPLACE ALL EXISTING UNDERGROUND UTILITIES DAMAGED DURING CONSTRUCTION ACTIVITIES TO ORIGINAL CONDITION OR BETTER. NO EXTRA PAY.
9. EXISTING VALVES MAY LEAK: CONTRACTOR SHALL MAKE PROVISIONS FOR ALTERNATIVE MEANS TO ISOLATE EXISTING PIPING. NO EXTRA PAY.
10. FIELD VERIFY ALIGNMENT OF PROPOSED WATER LINE FOR REQUIRED BENDS AND FITTINGS TO COMPLETE INSTALLATION.

WARNING:

OVERHEAD ELECTRIC LINES EXIST ON THE PROPERTY. CONTRACTOR IS RESPONSIBLE FOR SAFETY OF CONSTRUCTION WORKERS. TO ARRANGE FOR ELECTRIC LINES TO BE TURNED OFF OR MOVED, CALL RELIANT ENERGY AT (713) 207-2222.

CAUTION:

LOCATIONS OF EXISTING UNDERGROUND UTILITY LINES ARE APPROXIMATE ONLY. SERVICE LINES NOT SHOWN. THE CONTRACTOR SHALL DETERMINE LOCATIONS BEFORE COMMENCING WORK AND IS FULLY RESPONSIBLE FOR ANY DAMAGES CAUSED BY HIS FAILURE TO LOCATE AND PROTECT UNDERGROUND FACILITIES.

USE CAUTION WORKING ADJACENT TO PUMP BUILDING AND ADJACENT STRUCTURES. MONITOR AND PROTECT STRUCTURES AS REQUIRED. NO SEPERATE PAY.

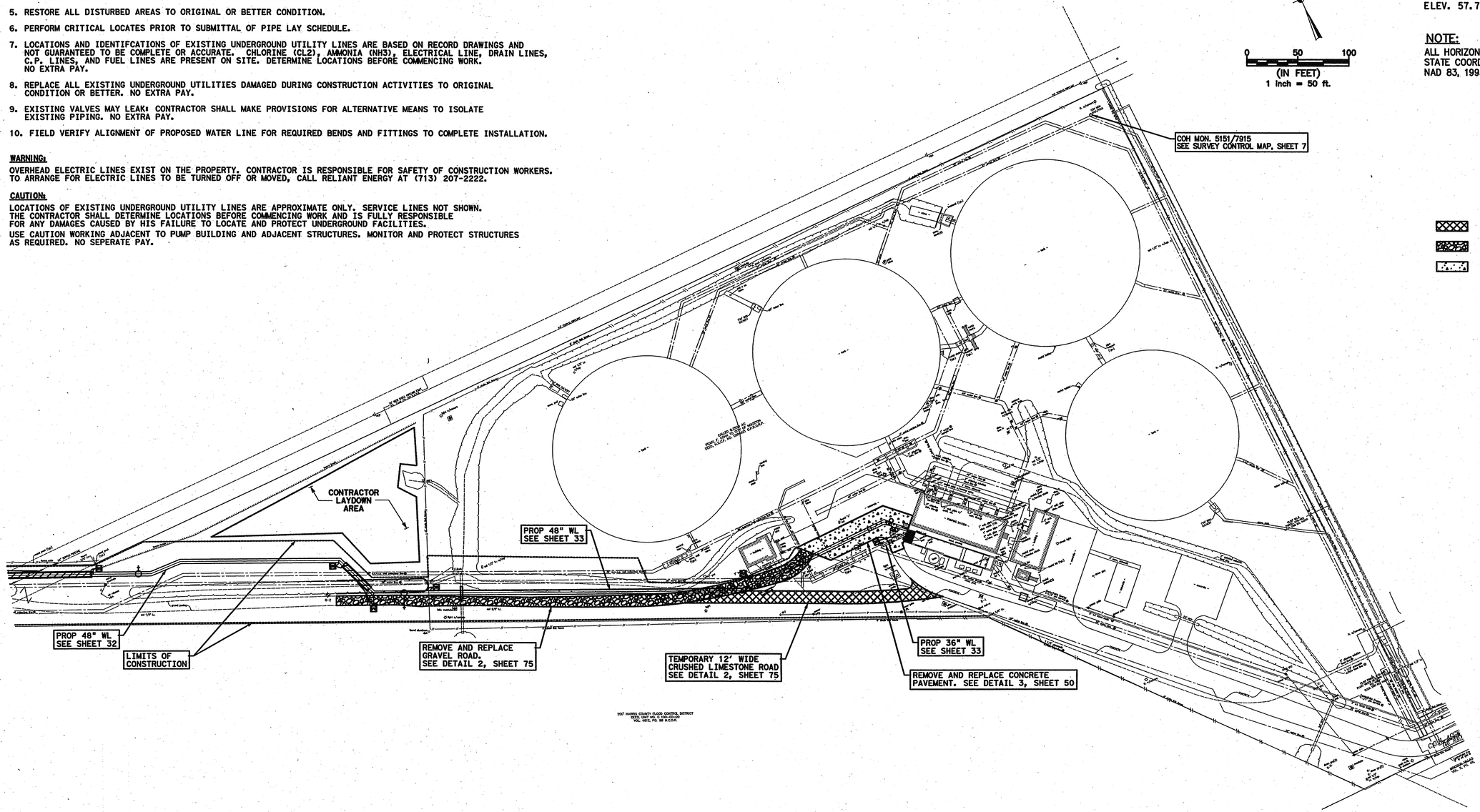

BENCHMARK:

CITY OF HOUSTON SURVEY MARKER 5151-7915,
¾" IRON ROD W/3" DIA BRASS CAP IN CONCRETE, INSIDE SIMS BAYOU WATER PLANT AT 13840 CROQUET,
AT NORTHEAST CORNER OF SITE.
KEY MAP: 571-K

ELEV. 57.75 FEET NAVD 1988, (2002 ADJUSTMENT)

NOTE:

ALL HORIZONTAL COORDINATES ARE BASED ON TEXAS STATE COORDINATE SYSTEM, SOUTH CENTRAL ZONE NAD 83, 1993 ADJUSTMENT.

LIMITS OF TEMPORARY CRUSHED LIMESTONE ROAD

LIMITS OF REMOVE AND REPLACE GRAVEL ROAD

LIMITS OF REMOVE AND REPLACE CONCRETE PAVEMENT

No.	Date	Revisions	App.

SWTP
Surface Water Transmission Program

Lockwood, Andrews & Newnam, Inc.
A LEO A DALY COMPANY
2925 Briarpark Drive Houston, TX 77042

SURVEYED BY:
KUO & ASSOCIATES, INC.
C.O.H. Field Book P-5554

STATE OF TEXAS
WILLIAM W. WILSHIRE III
94193
LICENSED PROFESSIONAL ENGINEER
1/20/2011
Lockwood, Andrews & Newnam, Inc. Firm No. F-2614

CITY OF HOUSTON
DEPARTMENT OF PUBLIC WORKS AND ENGINEERING

SWTP CONTRACT 74A-1

SIMS PUMP STATION
OVERALL SITE LAYOUT
PROPOSED IMPROVEMENTS

WBS NO.	S-000900-0109-4
DRAWING SCALE	1"=50'
CITY OF HOUSTON PM	ARTHUR C. MORRIS, P.E.
SHEET NO.	35 OF 91

ADOPTED AND FILED
48336
CITY SECRETARY

1997 HARRIS COUNTY FLOOD CONTROL DISTRICT
VOL. 1997, PG. 90 H.C.D.R.

10:44:45 AM 1/20/2011
L:\1301\10337-001\4-0-Production\4-01-Drawings\Civil\1Building Permit\10337-33-SBPS-Overall Site Plan.dgn

WARNING:

OVERHEAD ELECTRIC LINES EXIST ON THE PROPERTY. CONTRACTOR IS RESPONSIBLE FOR SAFETY OF CONSTRUCTION WORKERS. TO ARRANGE FOR ELECTRIC LINES TO BE TURNED OFF OR MOVED, CALL RELIANT ENERGY AT (713) 207-2222.

CAUTION:

EXISTING UNDERGROUND UTILITY LINES ARE SHOWN IN APPROXIMATE LOCATIONS ONLY. SERVICE LINES ARE NOT SHOWN. THE CONTRACTOR SHALL DETERMINE LOCATIONS BEFORE COMMENCING WORK AND IS FULLY RESPONSIBLE FOR ANY DAMAGES CAUSED BY HIS FAILURE TO LOCATE AND PROTECT UNDERGROUND FACILITIES.

USE CAUTION WORKING ADJACENT TO PUMP BUILDING AND ADJACENT STRUCTURES. MONITOR AND PROTECT STRUCTURES AS REQUIRED. NO SEPERATE PAY.

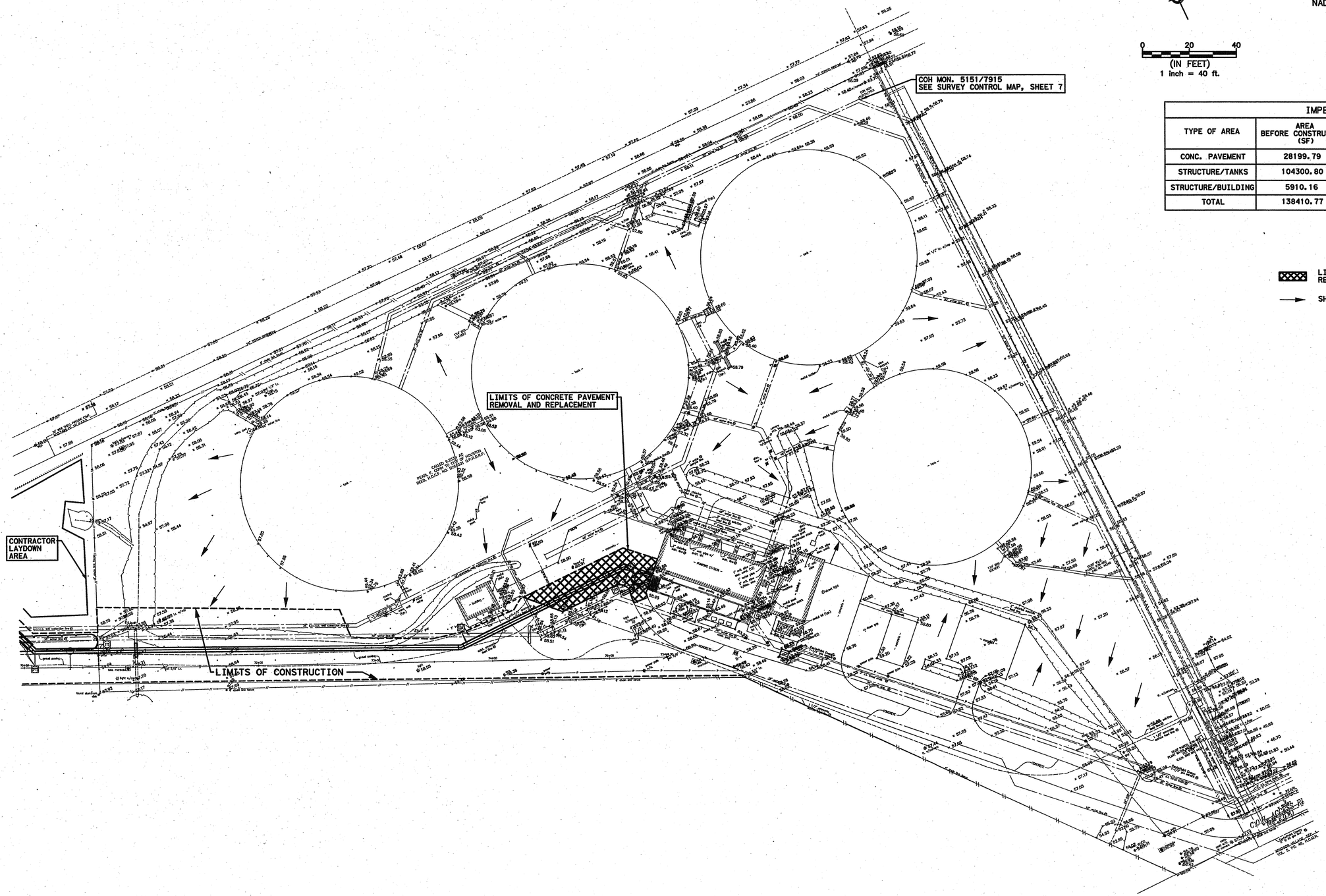

BENCHMARK:

CITY OF HOUSTON SURVEY MARKER 5151-7915,
¾" IRON ROD W/3" DIA BRASS CAP IN CONCRETE, INSIDE SIMS BAYOU WATER PLANT AT 13840 CROQUET,
AT NORTHEAST CORNER OF SITE.
KEY MAP: 571-K

ELEV. 57.75 FEET NAVD 1988, (2002 ADJUSTMENT)

NOTE:

ALL HORIZONTAL COORDINATES ARE BASED ON TEXAS STATE COORDINATE SYSTEM, SOUTH CENTRAL ZONE NAD 83, 1993 ADJUSTMENT.

0 20 40
(IN FEET)
1 inch = 40 ft.

No.	Date	Revisions	App.

IMPERVIOUS AREAS			
TYPE OF AREA	AREA BEFORE CONSTRUCTION (SF)	AREA DURING CONSTRUCTION (SF)	AREA AFTER CONSTRUCTION (SF)
CONC. PAVEMENT	28199.79	25234.98	28199.79
STRUCTURE/TANKS	104300.80	104300.80	104300.80
STRUCTURE/BUILDING	5910.16	5910.16	5910.16
TOTAL	138410.77	135445.96	138410.77

LIMITS OF CONCRETE PAVEMENT REMOVAL AND REPLACEMENT

SHEET FLOW DIRECTION

SWTP
Surface Water Transmission Program

Lockwood, Andrews & Newnam, Inc.
A LEO A DALY COMPANY
2925 Briarpark Drive Houston, TX 77042

SURVEYED BY:
KUO & ASSOCIATES, INC.
C.O.H. Field Book P-5554

STATE OF TEXAS
WILLIAM W. WILSHIRE III
94193
LICENSED PROFESSIONAL ENGINEER
Lockwood, Andrews & Newnam, Inc
Firm No. F-2614

CITY OF HOUSTON
DEPARTMENT OF PUBLIC WORKS AND ENGINEERING

SWTP CONTRACT 74A-1

SIMS BAYOU PUMP STATION DRAINAGE

WBS NO.	S-000900-0109-4
DRAWING SCALE	1 IN = 40 FT
CITY OF HOUSTON PM	ARTHUR C. MORRIS, P.E.
SHEET NO.	36 OF 91

PUBLIC WORKS AND ENGINEERING
ACCEPTED AND FILED
48826
HOUSTON, TEXAS

L:\130-1037-004\4-Production\4-01-Drawings\Civil\Building Permit\1037-36-SIMS-Drainage Plan.dgn
1/20/2011
10:44:48 AM

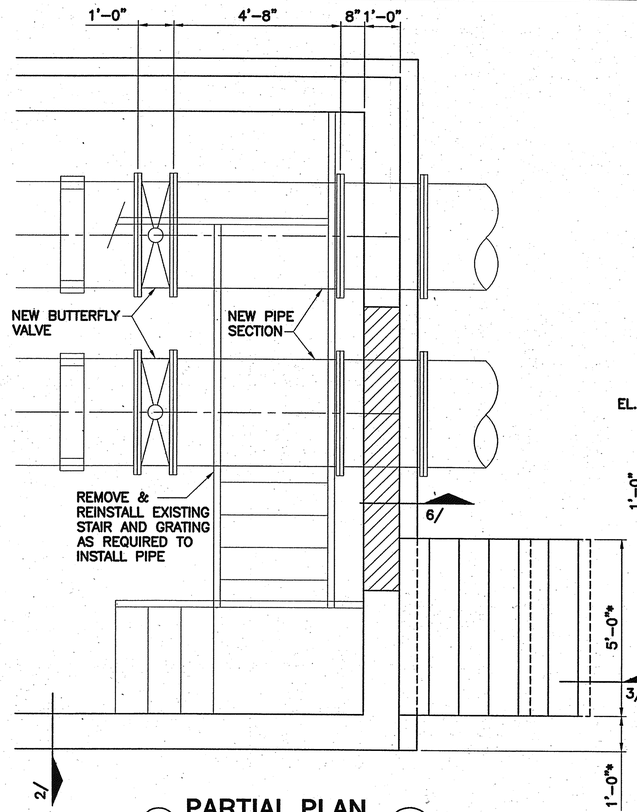

1 PARTIAL PLAN
SCALE: 1/2"=1'-0"

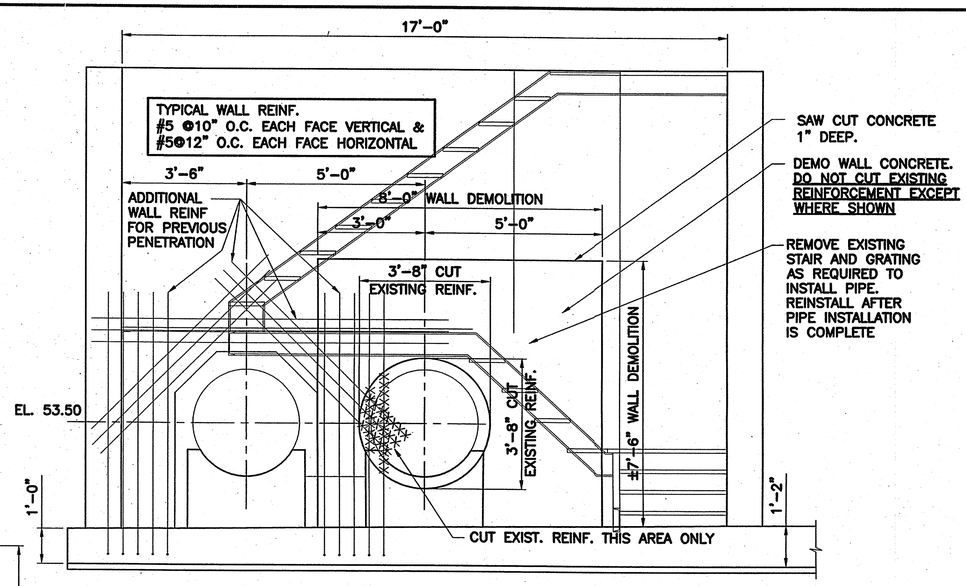

2 SECTION (DEMOLITION)
SCALE: 1/2"=1'-0"

SAW CUT WALL 1 INCH DEEP ON EACH FACE. BREAK OUT REMAINDER OF WALL THICKNESS WITH JACKHAMMER OR SIMILAR EQUIPMENT.

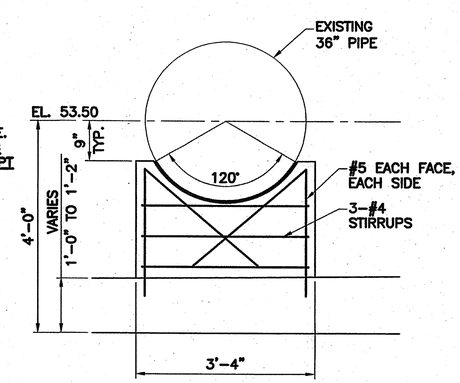

4 CONCRETE SUPPORT SADDLE
SCALE: 3/4"=1'-0"

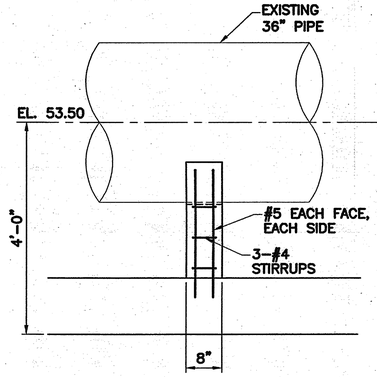

5 SECTION
SCALE: 3/4"=1'-0"

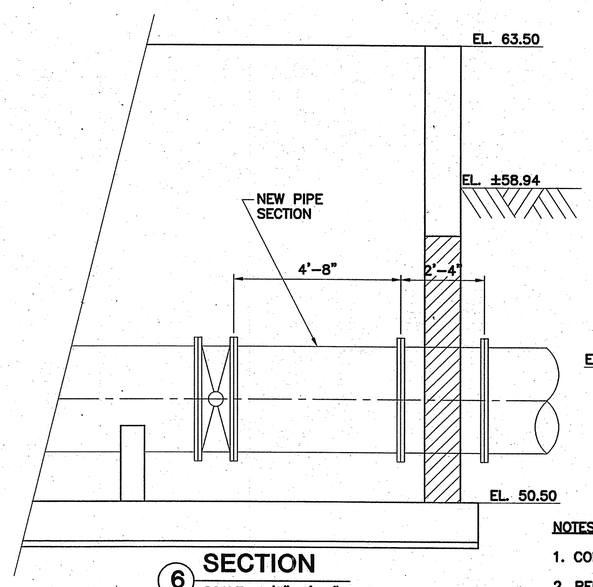

6 SECTION
SCALE: 1/2"=1'-0"

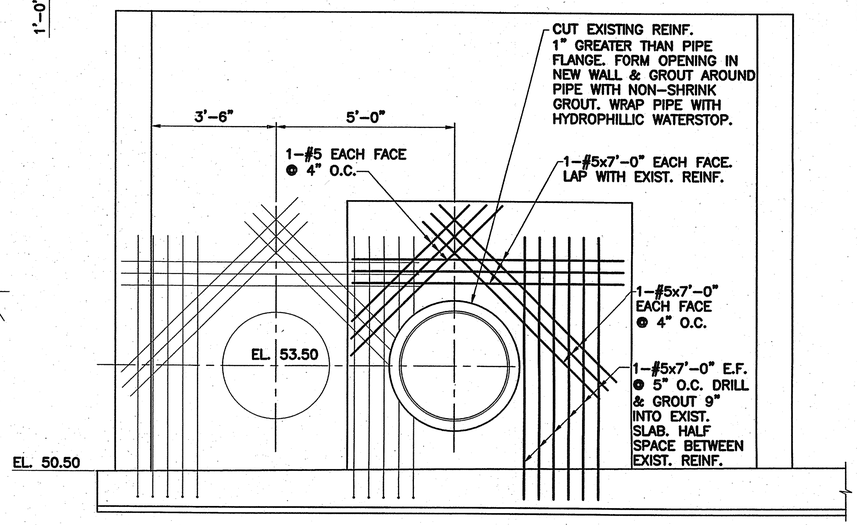

2 SECTION
SCALE: 1/2"=1'-0"

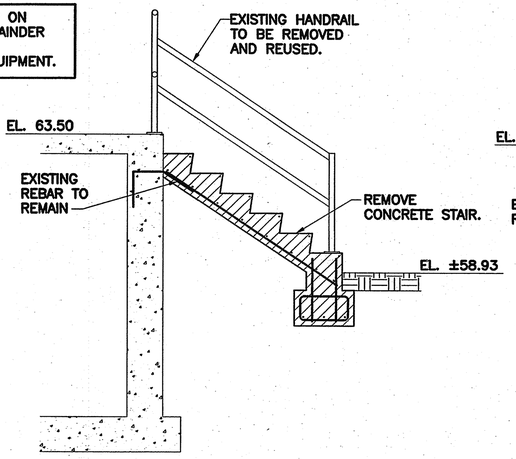

3 SECTION (DEMOLITION)
SCALE: 1/2"=1'-0"

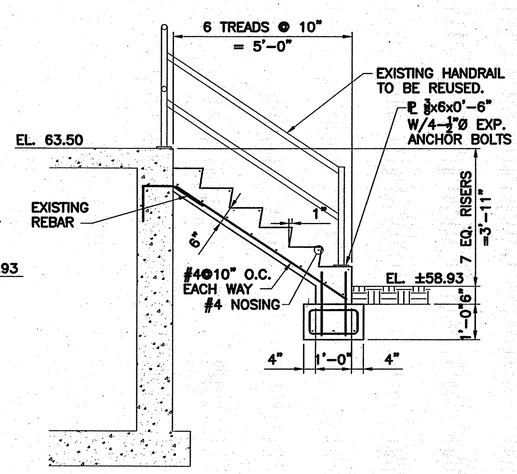

3 SECTION
SCALE: 1/2"=1'-0"

SWTP
Surface Water Transmission Program

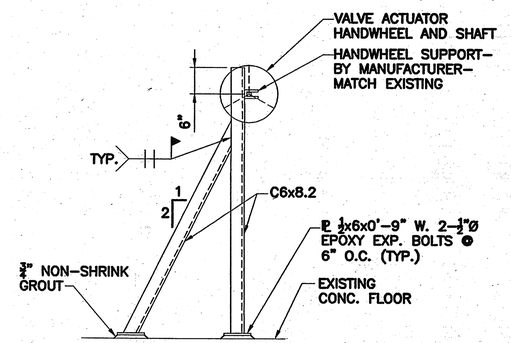

7 HANDWHEEL SUPPORT DETAIL
SCALE: 3/4"=1'-0"

NOTES

1. CONCRETE SHALL HAVE A MINIMUM COMPRESSIVE STRENGTH OF 3000 PSI AT 28 DAYS.
2. REINFORCING STEEL SHALL BE ASTM A615 WITH A MINIMUM YIELD STRENGTH OF 60 KSI.
3. NON-SHRINK GROUT SHALL HAVE A MINIMUM COMPRESSIVE STRENGTH OF 5000 PSI.
4. CUT EXISTING WALL REINFORCEMENT ONLY AT PIPE OPENING. CLEAN ALL CONCRETE FROM EXISTING REINFORCEMENT PRIOR TO REPLACING WALL.
5. REPLACEMENT PORTION OF WALL TO HAVE A RUB FINISH ON INSIDE FACE AND OUTSIDE FACE ABOVE GRADE. REMAINDER OF WALL MAY HAVE A ROUGH FORM FINISH.
6. * DENOTES MEASUREMENT TO BE FIELD VERRIFIED AND TO MATCH EXISTING CONDITIONS.

No.	DATE	REVISIONS	APP'D

LAN
Lockwood, Andrews & Newnam, Inc.
A LEO A DALY COMPANY
2925 Briarpark Drive Houston, TX 77042

STATE OF TEXAS — WARREN W. SCOTT — 108776 — LICENSED PROFESSIONAL ENGINEER
1/8/2011
Lockwood, Andrews & Newnam, Inc. Firm No. 2614

SURVEYED BY: KUO & ASSOCIATES, INC. C.O.H. Field Book P-

CITY OF HOUSTON
DEPARTMENT OF PUBLIC WORKS AND ENGINEERING

SWTP CONTRACT 74A-1

SIMS PS CONNECTION STRUCTURAL DETAILS

WBS NO.	S-000900-0109-4
DRAWING SCALE	3/4" = 1'-0"
CITY OF HOUSTON PM	ARTHUR C. MORRIS, P.E.
SHEET NO.	37 OF 91

ACCEPTED AND FILED — 48826 — CITY DRAWING MASTER — HOUSTON, TEXAS

LAST MODIFIED: 04 APR 2007 08:08:17
PATH
FILE NAME S1.DWG
XREF(S) ATTACHED: BORDER
L:\130-10337-004\PROD\4-0-PRODUCTION\4-01-DRAWINGS\STRUCTURAL\STRUC\

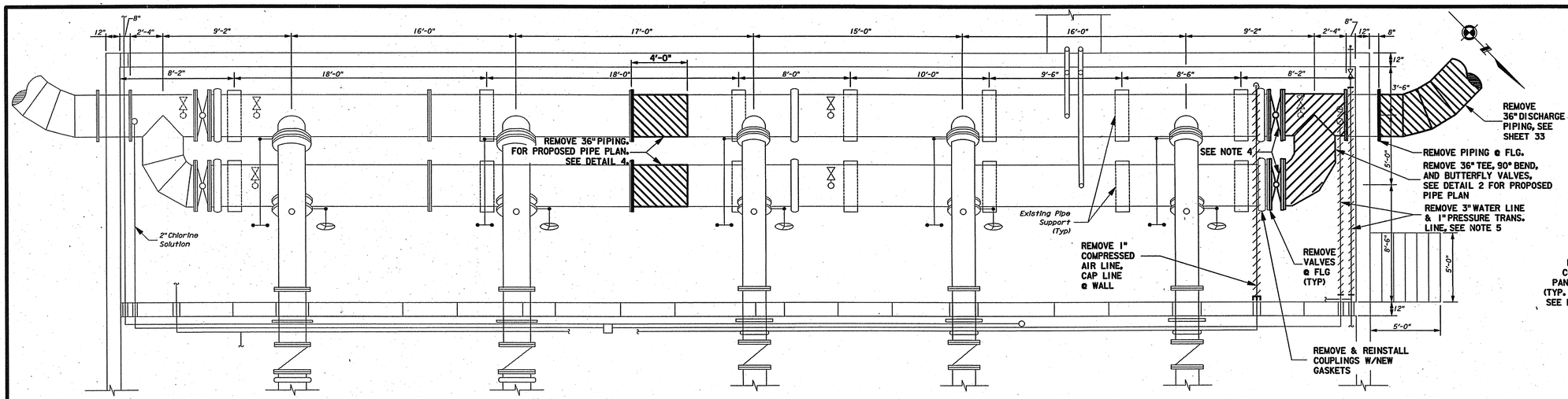

NOTES:

1. DIMENSIONS SHOWN ARE BASED ON AS-BUILT DRAWINGS. CONTRACTOR TO VERIFY DIMENSIONS PRIOR TO FABRICATIONS AND CONSTRUCTION.
2. PROTECT IN PLACE AND SUPPORT AS NECESSARY EXIST PIPING. CONDUIT, VALVES, AND VALVE ACTUATORS. NO SEPERATE PAY.
3. SALVAGE EXISTING 36" BUTTERFLY VALVES AND DELIVER TO CITY. COORDINATE WITH CITY'S PROJECT MANAGER.
4. REMOVE EXISTING VALVE BONNET EXTENSIONS AND REINSTALL WITH NEW VALVES.
5. UNPLUG AT RECEPTACLE AND REMOVE EXIST. HEAT TRACER ALONG 1" PRESSURE TRANS. LINE. RE-INSTALL WITH NEW LINE.

1/38 DEMOLITION PLAN – DISCHARGE BAY

SCALE: 1/4"=1'-0"

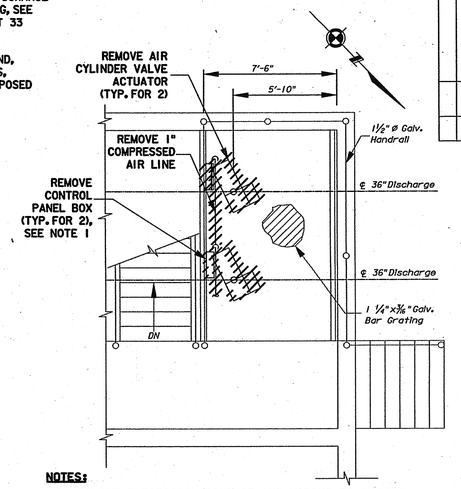

NOTES:

1. REMOVE ELECTRICAL CONDUIT AND WIRING TO CONTROL PANEL BOX. CAP CONDUIT BELOW FLOOR GRATING.

5/38 DEMOLITION PLAN – FIRST FLOOR

SCALE: ¼"=1'-0"

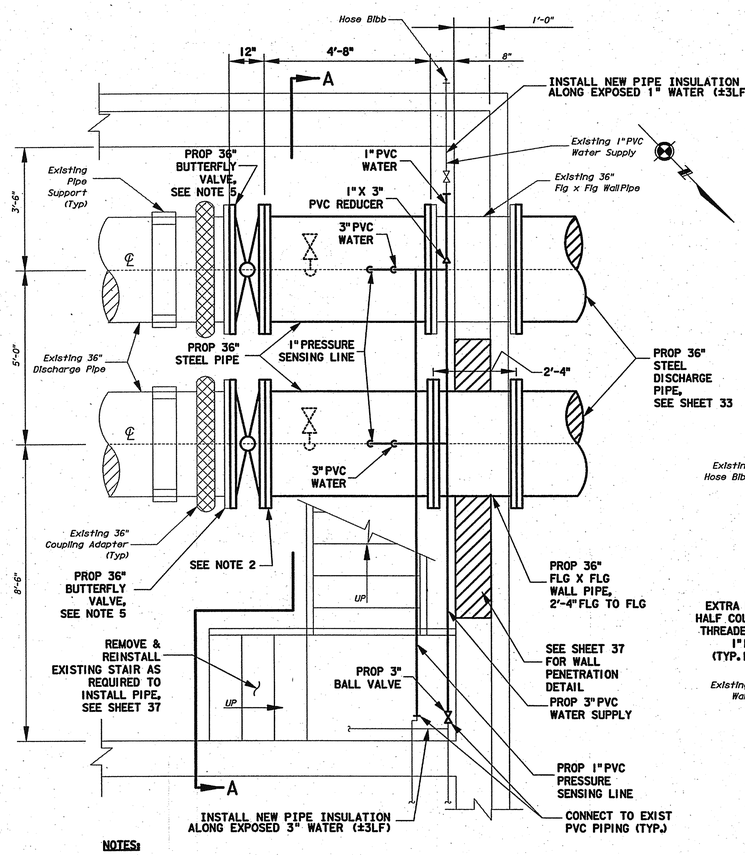

NOTES:

1. SUPPORT DISCHARGE PIPING AND VALVES AS NECESSARY FOR THRUST BLOCKING THROUGHOUT CONSTRUCTION.
2. PROVIDE FLANGE ADAPTER AND INSULATING KIT AT EACH VALVE.
3. FIELD VERIFY EXIST PIPE CONFIGURATION AND DIMENSIONS PRIOR TO BEGINNING WORK.
4. REPLACE GASKET FOR EXISTING 36" COUPLINGS AND RE-INSTALL.
5. RE-INSTALL EXIST. VALVE BONNET EXTENSIONS WITH NEW VALVE OPERATOR EXTENSION STEMS. INSTALL NEW MANUAL ACTUATORS W/HANDWHEELS.

DELETE JUMPER WIRES.

2/38 PROPOSED PIPE PLAN

SCALE: ½"=1'-0"

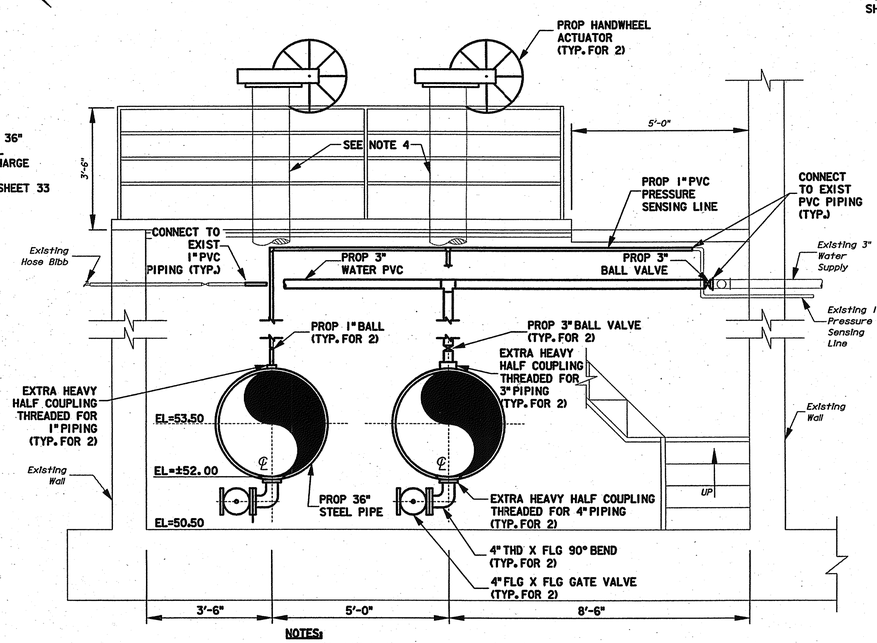

NOTES:

1. CONTRACTOR TO FIELD VERIFY ELEVATIONS.
2. SUPPORT EXISTING SMALL DIAMETER PIPING AS NECESSARY.
3. INSTALL PIPE INSULATION ON 1" PRESSURE SENSING LINE AND 3" WATER. RE-INSTALL HEAT TRACER ALONG NEW 1" PRESSURE SENSING LINE.
4. RE-INSTALL EXIST. VALVE BONNET EXTENSIONS WITH NEW VALVE OPERATOR EXTENSIONS STEMS.

3/38 SECTION A–A

SCALE: N.T.S.

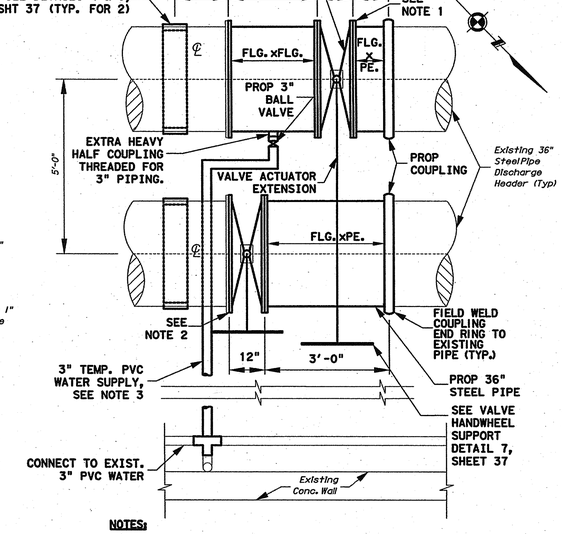

NOTES:

1. INSTALL VALVE WITH OPERATOR STEM IN VERTICAL POSITION.
2. INSTALL VALVE WITH OPERATOR STEM ±45° BELOW HORIZONTAL POSITION.
3. INSTALL TEMP. WATER LINE ALONG FLOOR AND WALL OF DISCHARGE BAY. PROVIDE SUPPORTS AT FLOOR AND WALL AS NECESSARY. REMOVE TEMP. WATER LINE AS DIRECTED BY CITY'S PROJECT MANAGER. INSTALL 3" STEEL PLUG @ 36" DISCHARGE HEADER.

4/38 PROPOSED PIPE PLAN

SCALE: ½"=1'-0"

SWTP
Surface Water Transmission Program

Lockwood, Andrews & Newnham, Inc.
A LEO A DALY COMPANY
2925 Briarpark Drive Houston, TX 77042

STATE OF TEXAS — WILLIAM M. WILSHIRE III — 94193 — LICENSED PROFESSIONAL ENGINEER
Lockwood, Andrews & Newnham, Inc. Firm No. F-2614

SURVEYED BY:
KUO & ASSOCIATES, INC.
C.O.H. Field Book P-5554

CITY OF HOUSTON
DEPARTMENT OF PUBLIC WORKS AND ENGINEERING

SWTP CONTRACT 74A-1

SIMS BAYOU PUMP STATION MECHANICAL DETAILS

WBS NO.	S-000900-0109-4
DRAWING SCALE	SCALE AS SHOWN
CITY OF HOUSTON PM	ARTHUR C. MORRIS, P.E.
SHEET NO.	38 OF 91

PUBLIC WORKS AND ENGINEERING — ACCEPTED AND FILED — 48326 — CITY DRAWING NUMBER — HOUSTON, TEXAS

Asp. | Revisions | No. | Date

1/21/2011

L:\130-1037-006\4-0-Production\4-01-Drawings\Civil\Building Permit\1037-39-SIPS-Comm Mech Dets.dgn

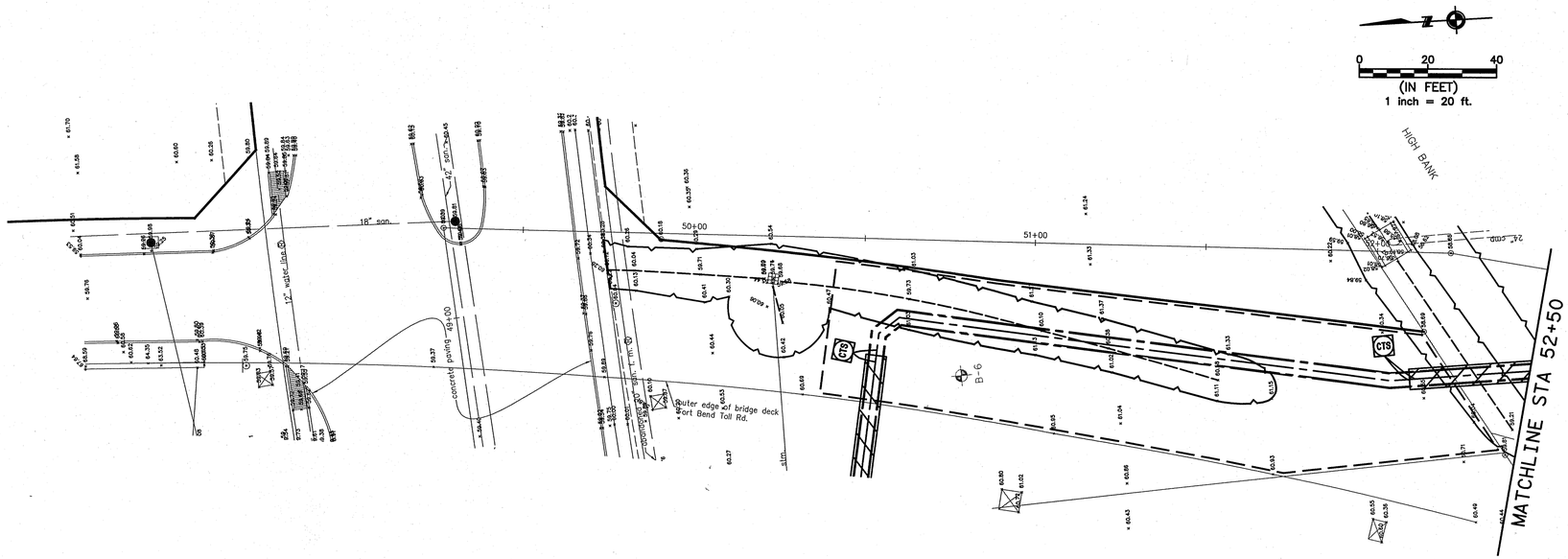

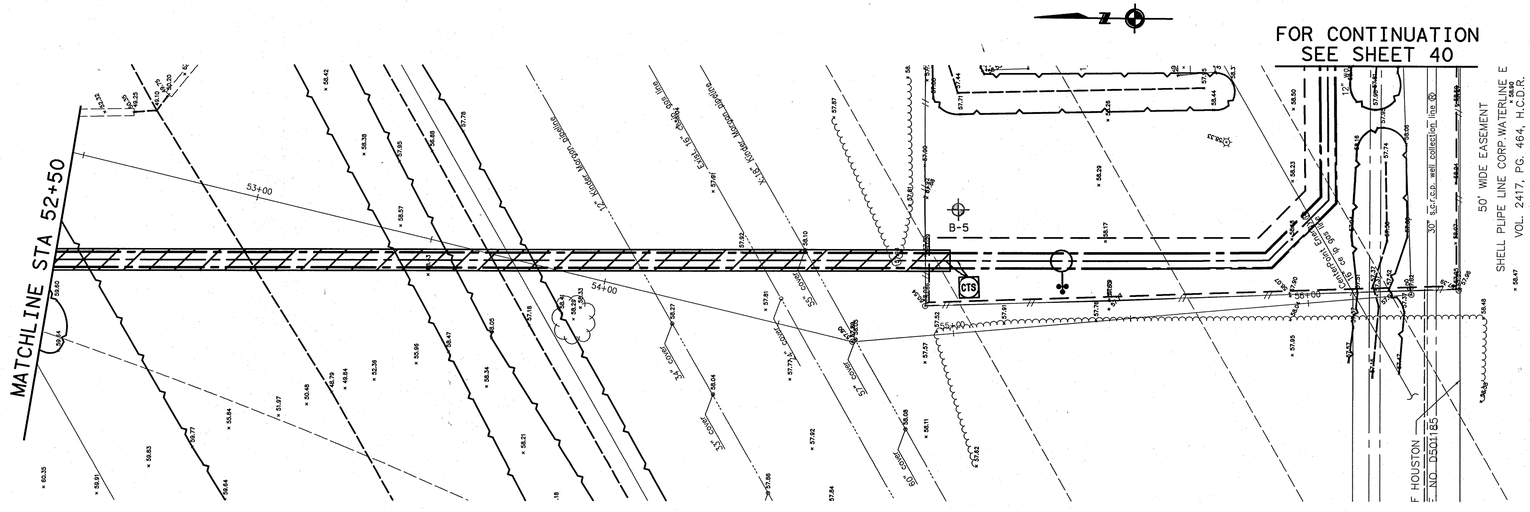

BENCHMARK:

CITY OF HOUSTON SURVEY MARKER 5151-7715,
FLOODPLAIN REFERENCE MARK NUMBER 030130,
A BRASS DISK STAMPED 030130 AN BRIDGE
AT WEST OREM DRIVE (E-BOUND) AND SIMS BAYOU
LOCATED ON DOWNSTREAM, SOUTH CONCRETE
WALK, AT SE CORNER OF BRIDGE IN KEYMAP 571-K
IN THE SIMS WATERSHED NEAR STREAM C156-00-00

ELEV. 60.47 FEET NAVD 1988, 2001 ADJUSTMENT

NOTE:

ALL HORIZONTAL COORDINATES ARE BASED ON TEXAS
STATE COORDINATE SYSTEM, SOUTH CENTRAL ZONE
NAD 83, 1993 ADJUSTMENT.

No.	Date	Revisions	App.

NOTES:

1. ELEVATIONS PROVIDED ARE EXISTING.
   REGRADE DITCHES & SWALES TO EXISTING ELEVATIONS

SWTP
Surface Water Transmission Program

Lockwood, Andrews & Newnam, Inc.
A LEO A DALY COMPANY
2925 Briarpark Drive Houston, TX 77042

SURVEYED BY:
KUO & ASSOCIATES, INC.
C.O.H. Field Book P-5554

STATE OF TEXAS
ALISA GRUBER
95685
LICENSED PROFESSIONAL ENGINEER
7-5-11
Lockwood, Andrews & Newnam, Inc
Firm No. 2614

CITY OF HOUSTON
DEPARTMENT OF PUBLIC WORKS AND ENGINEERING

SWTP CONTRACT 74A-1

GRADING
STA 49+26.78 TO STA 56+28.86
SHEET 1 OF 3

WBS NO.	S-000900-0109-4
DRAWING SCALE	1"=20'
CITY OF HOUSTON PM	ARTHUR C. MORRIS, P.E.
SHEET NO.	39 OF 91

ACCEPTED AND FILED
48326
CITY DRAWING NO.
HOUSTON, TEXAS

12/28/2010 4:25:15 PM jmusku
L:\130-10331-0044-6-Production\4-01-Grad\ngs\S1\r1\10331-4-GRADING-01.dgn

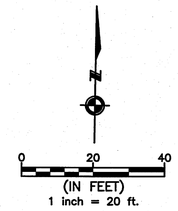

BENCHMARK:

CITY OF HOUSTON SURVEY MARKER 5151-7715,
FLOODPLAIN REFERENCE MARK NUMBER 030130,
A BRASS DISK STAMPED 030130 AN BRIDGE
AT WEST OREM DRIVE (E-BOUND) AND SIMS BAYOU
LOCATED ON DOWNSTREAM, SOUTH CONCRETE
WALK, AT SE CORNER OF BRIDGE IN KEYMAP 571-K
IN THE SIMS WATERSHED NEAR STREAM C156-00-00

ELEV. 60.47 FEET NAVD 1988, 2001 ADJUSTMENT

NOTE:

ALL HORIZONTAL COORDINATES ARE BASED ON TEXAS
STATE COORDINATE SYSTEM, SOUTH CENTRAL ZONE
NAD 83, 1993 ADJUSTMENT.

No.	Date	Revisions	App.

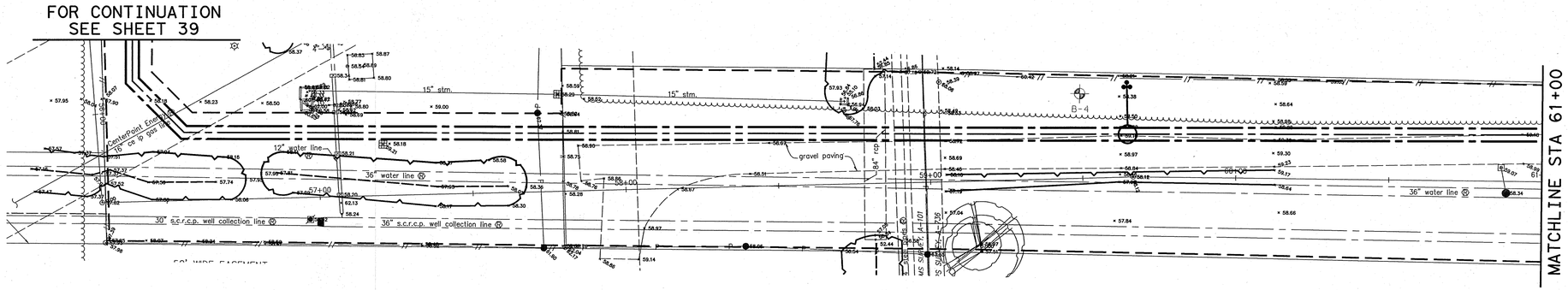

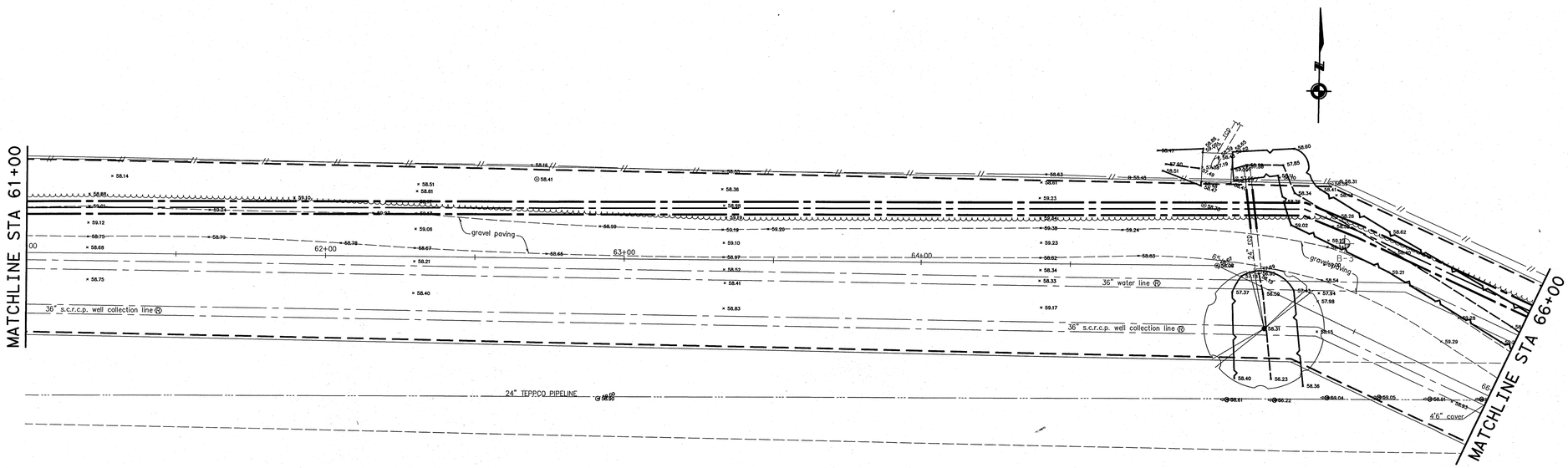

NOTES:

1. ELEVATIONS PROVIDED ARE EXISTING.
   REGRADE DITCHES & SWALES TO EXISTING ELEVATIONS

SWTP
Surface Water Transmission Program

LAN
Lockwood, Andrews & Newnam, Inc.
A LEO A DALY COMPANY
2925 Briarpark Drive Houston, TX 77042

SURVEYED BY:
KUO & ASSOCIATES, INC.
C.O.H. Field Book P-5554

STATE OF TEXAS
ALISA GRUBER
95685
LICENSED PROFESSIONAL ENGINEER
Lockwood, Andrews & Newnam, Inc
Firm No. 2614

CITY OF HOUSTON
DEPARTMENT OF PUBLIC WORKS AND ENGINEERING

SWTP CONTRACT 74A-1

GRADING
STA 56+28.86 TO STA 66+00
SHEET 2 OF 3

WBS NO.	S-000900-0109-4
DRAWING SCALE	1"=20'
CITY OF HOUSTON PM	
ARTHUR C. MORRIS, P.E.	
SHEET NO.	40 OF 91

PUBLIC WORKS AND ENGINEERING
ACCEPTED AND FILED
48326
CITY DRAWING NUMBER
HOUSTON, TEXAS

12/28/2010 4:25:16 PM jmusiku
L:\1320-10337-004\4-0-Production\4-01-Drawings\Civil\10337-4-GRADING-02.dgn

BENCHMARK:

CITY OF HOUSTON SURVEY MARKER 5151-7715,
FLOODPLAIN REFERENCE MARK NUMBER 030130,
A BRASS DISK STAMPED 030130 AN BRIDGE
AT WEST OREM DRIVE (E-BOUND) AND SIMS BAYOU
LOCATED ON DOWNSTREAM, SOUTH CONCRETE
WALK, AT SE CORNER OF BRIDGE IN KEYMAP 571-K
IN THE SIMS WATERSHED NEAR STREAM C156-00-00

ELEV. 60.47 FEET NAVD 1988, 2001 ADJUSTMENT

NOTE:

ALL HORIZONTAL COORDINATES ARE BASED ON TEXAS STATE COORDINATE SYSTEM, SOUTH CENTRAL ZONE NAD 83, 1993 ADJUSTMENT.

No.	Date	Revisions	App'd

0 20 40
(IN FEET)
1 inch = 20 ft.

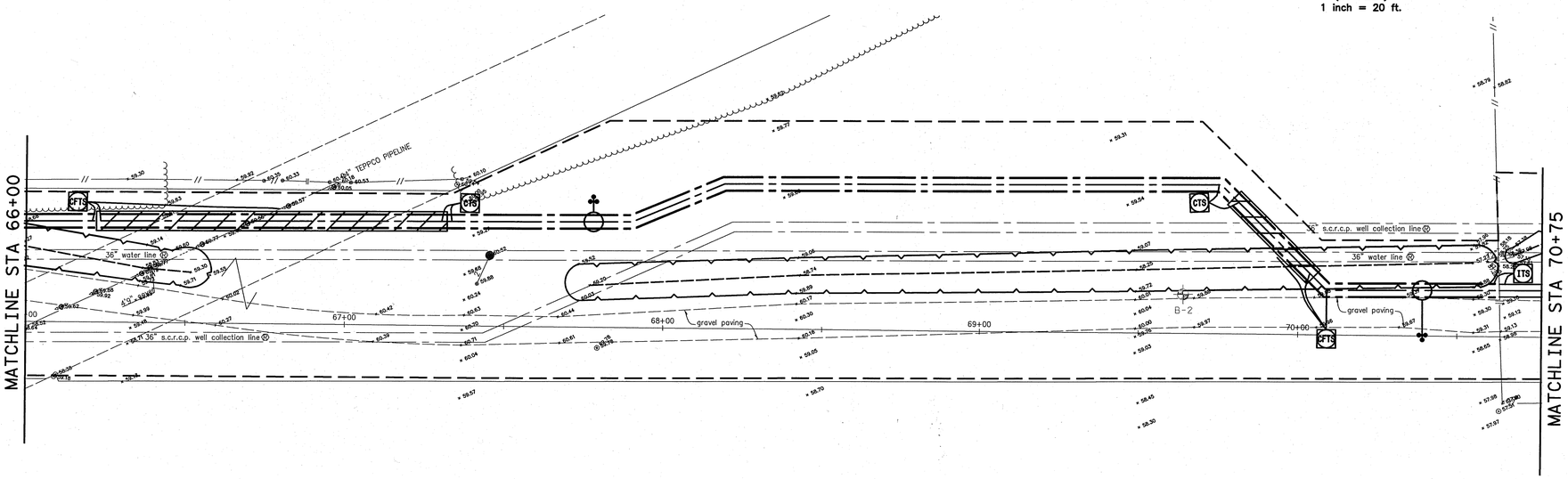

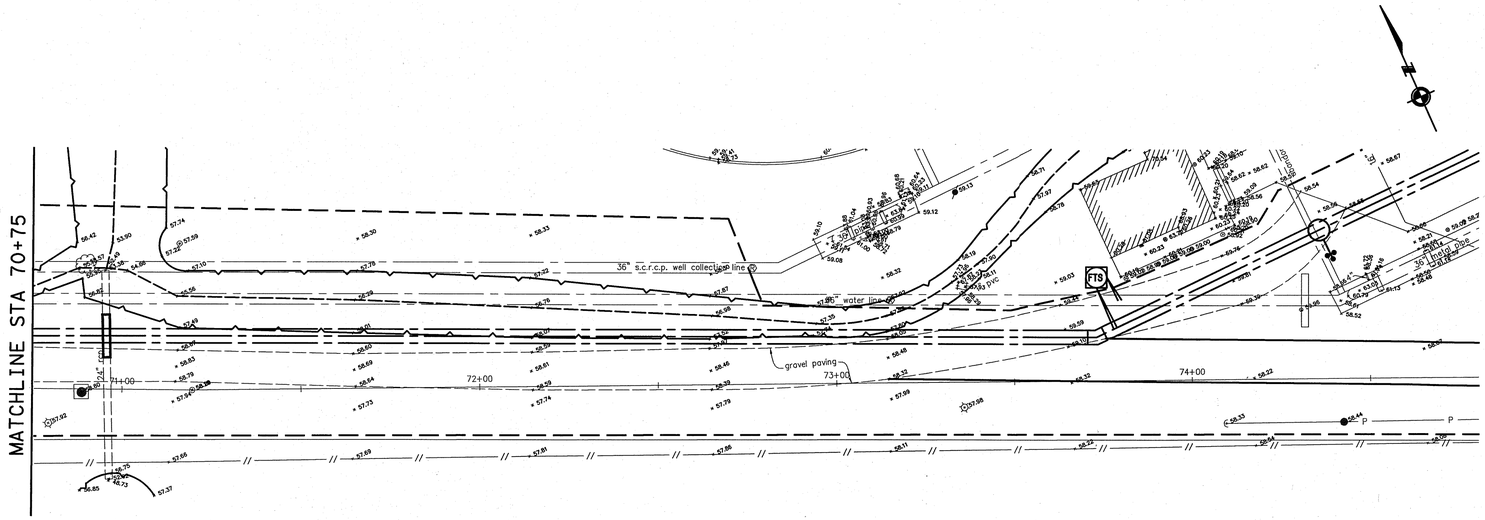

NOTES:

1. ELEVATIONS PROVIDED ARE EXISTING.
   REGRADE DITCHES & SWALES TO EXISTING ELEVATIONS

SWTP
Surface Water Transmission Program

LAN
Lockwood, Andrews & Newnam, Inc.
A LEO A DALY COMPANY
2925 Briarpark Drive Houston, TX 77042

SURVEYED BY:
KUO & ASSOCIATES, INC.
C.O.H. Field Book P-5554

1-3-11
STATE OF TEXAS
ALISA GRUBER
95685
LICENSED PROFESSIONAL ENGINEER
Lockwood, Andrews & Newnam, Inc.
Firm No. 2614

CITY OF HOUSTON
DEPARTMENT OF PUBLIC WORKS AND ENGINEERING

SWTP CONTRACT 74A-1

GRADING
STA 66+00 TO STA 75+49.29
SHEET 3 OF 3

WBS NO.	S-000900-0109-4
DRAWING SCALE	1"=20'
CITY OF HOUSTON PM	ARTHUR C. MORRIS, P.E.
SHEET NO.	41 OF 91

ACCEPTED AND FILED
48326
CITY DRAWING NUMBER
HOUSTON, TEXAS

12/28/2010 4:25:17 PM jmuskru
L:\130-10537-004\4-0 Production\en\4-01-0\new\mpk\Civil\10537-4-GRADING-03.dgn

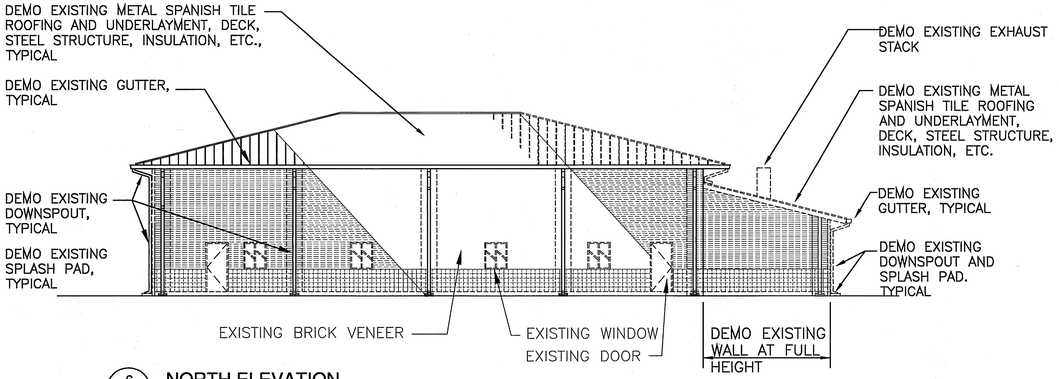

6/41A **NORTH ELEVATION**
SCALE 3/32" = 1'-0"

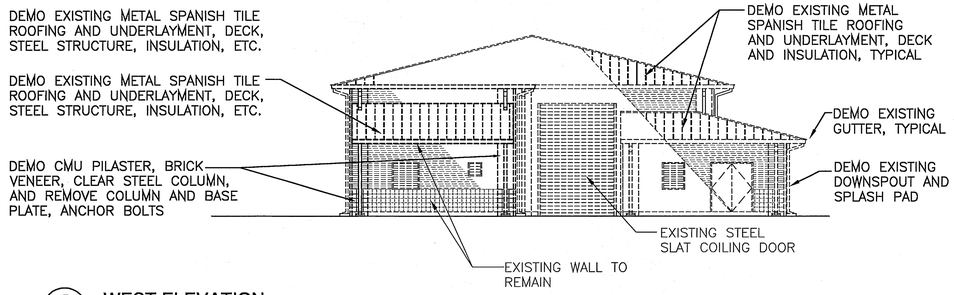

5/41A **WEST ELEVATION**
SCALE 3/32" = 1'-0"

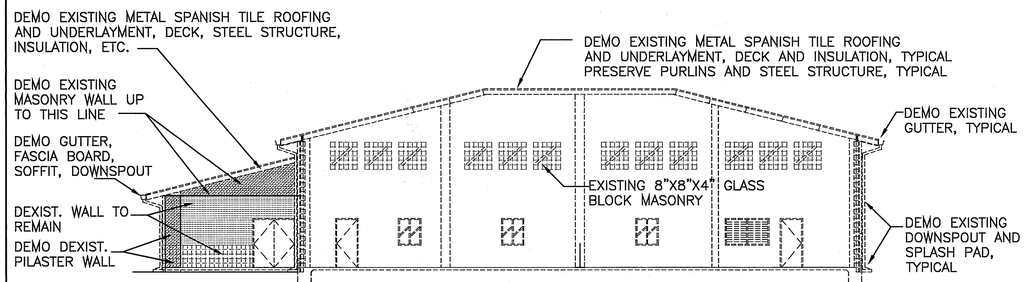

4/41A **BUILDING SECTION W/ SCRUBBER WING IN ELEVATION**
SCALE 3/32" = 1'-0"

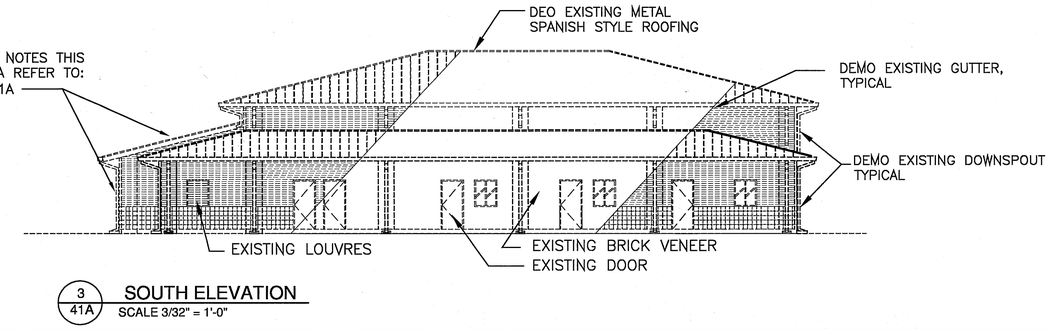

3/41A **SOUTH ELEVATION**
SCALE 3/32" = 1'-0"

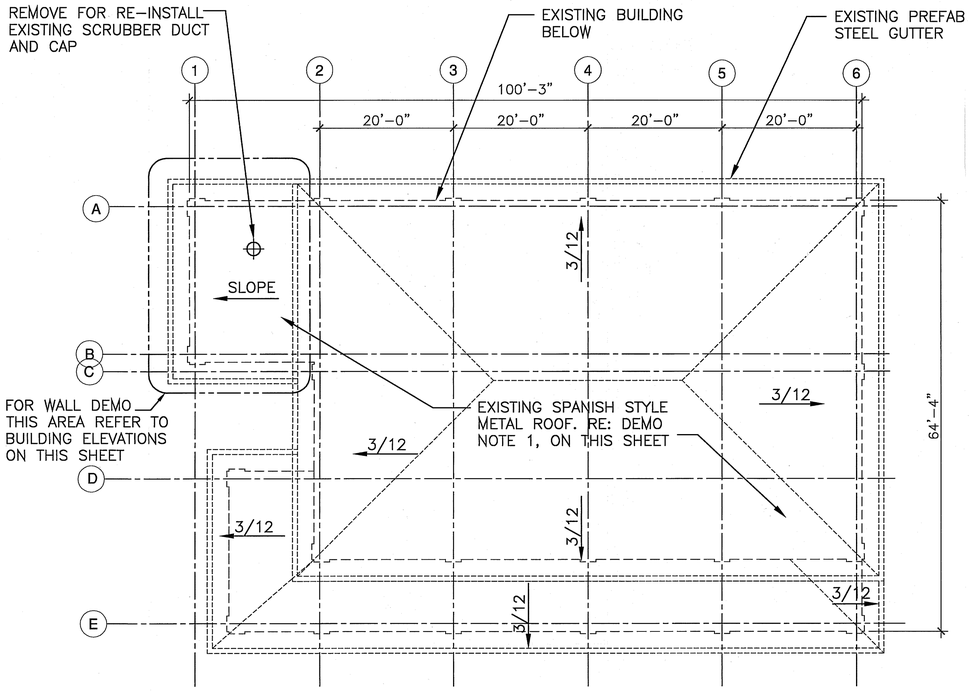

2/41A **ROOF PLAN**
SCALE 3/32" = 1'-0"

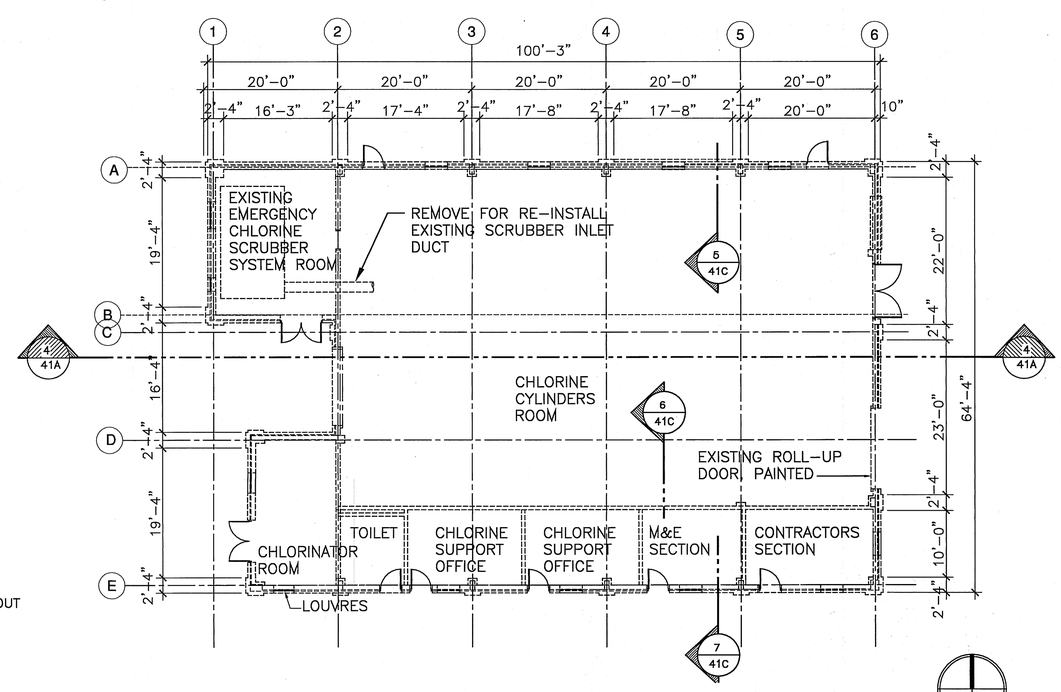

1/41A **FLOOR PLAN**
SCALE 3/32" = 1'-0"

GENERAL NOTE

SCOPE OF THIS PROJECT DOES NOT INCLUDE ANY ADDITION OR CHANGES IN THE BUILDING AREA AND IN THE NATURE OF THE BUILDING AND IT DOES NOT EFFECT ANY REQUIREMENTS OF EXISTING "H" OCCUPANCIES.

GENERAL NOTES

1. ALL ITEMS ARE EXSTING UNLESS OTHERWISE NOTED. THEREFORE THE WORD "EXISTING" IS NOT REPEATED. EXCEPT ON EAVE DETAIL.

DEMO NOTES:

1. ALL EXISTING ROOFS, INCLUDING INSTALLATION, UNDERLAYMENT, GUTTER AND DOWNSPOUTS, SOFFIT AND FASCIA PANELS SHALL BE DEMOLISHED AND REMOVED FROM JOBSITE AND SHALL BE DUMPED IN A LEGAL DUMPING SITE.
2. EXISTING STEEL STRUCTURE (EXCEPT SCRUBBER ROOM) INCLUDING MAIN FRAMES, PURLINS, GIRTS ETC., SHALL REMAIN IN PLACE AND WITHOUT DAMAGE. SHOULD THERE BE ANY DAMAGE INCURRED TO STEEL STRUCTURE OR OTHER PARTS OF THE BUILDING BECAUSE OF ROOF DEMOLITION, THE DAMAGED PARTS SHALL BE REPAIRED TO ITS ORIGINAL CONDITION.
3. SCRUBBER ROOM ROOF AND STEEL ROOF STRUCTURE AND PARTIAL MASONRY WALL STRUCTURE SHALL BE REMOVED. FOR LIMIT OF DEMOLITION REFER BUILDING ELEVATIONS ON THIS SHEET AND TO SHEETS 41D, 41E, 41.J, AND 41L

No.	DATE	REMARKS	APP.
1	X	X	

SWTP
Surface Water Transmission Program

LAN
Lockwood, Andrews & Newnam, Inc.
A LEO A DALY COMPANY
2925 Briarpark Drive Houston, TX 77042

REGISTERED ARCHITECT LEONARD KALANTARIANS 6825 STATE OF TEXAS
03/08/2011

CITY OF HOUSTON
DEPARTMENT OF PUBLIC WORKS AND ENGINEERING
SWTP CONTRACT 74A-1
CHLORINE BUILDING
EXISTING PLAN, ELEVATIONS AND DETAILS

WBS NO. S-000900-109-4	
DRAWING SCALE	3/32" = 1'-0"
CITY OF HOUSTON PM	ARTHUR MORRIS, P.E.
SHEET NO. 41A OF	208

PUBLIC WORKS AND ENGINEERING ACCEPTED AND FILED 48326 CITY OF HOUSTON TEXAS

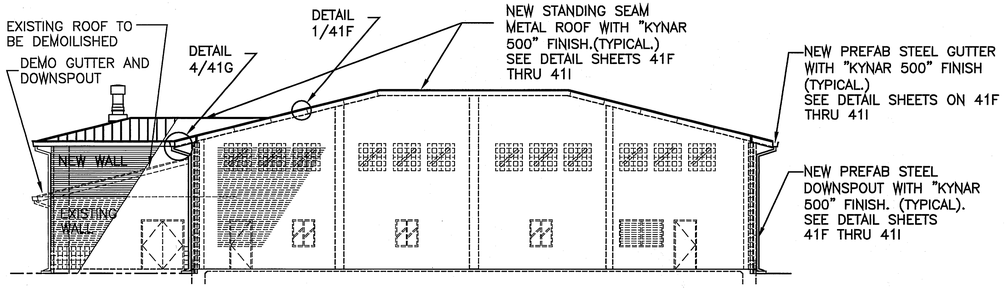

6 / 41B **BUILDING SECTION W/ SCRUBBER WING IN ELEVATION**
SCALE 3/32" = 1'-0"

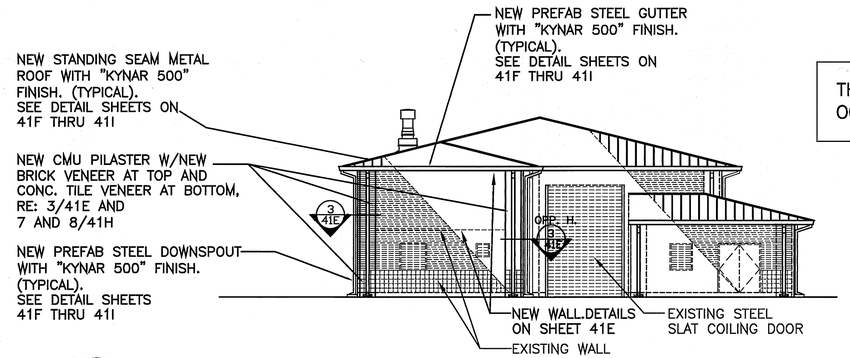

THIS BUILDING IS OCCUPANCY H4

5 / 41B **WEST ELEVATION**
SCALE 3/32" = 1'-0"

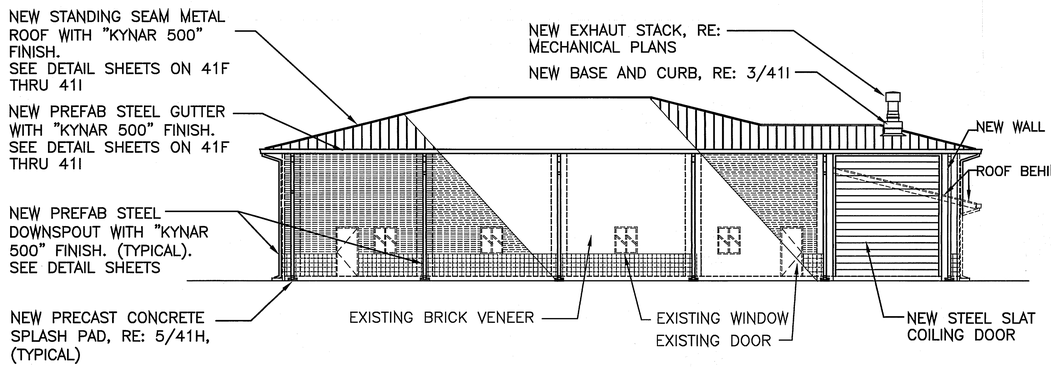

4 / 41B **NORTH ELEVATION**
SCALE 3/32" = 1'-0"

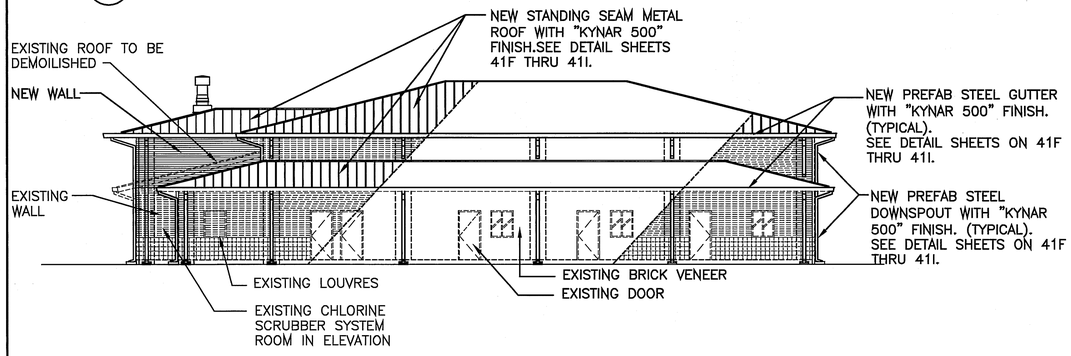

3 / 41B **SOUTH ELEVATION**
SCALE 3/32" = 1'-0"

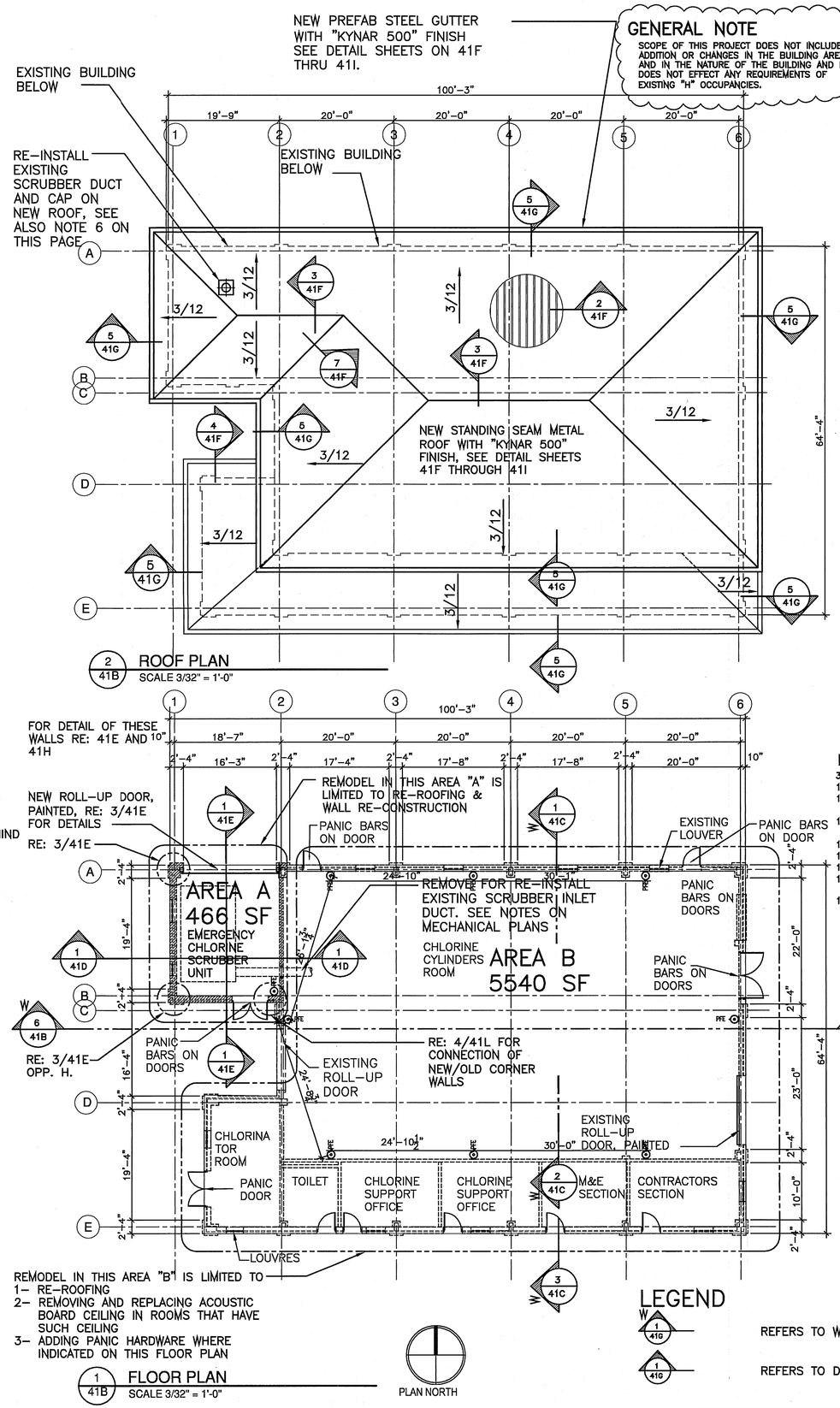

2 / 41B **ROOF PLAN**
SCALE 3/32" = 1'-0"

1 / 41B **FLOOR PLAN**
SCALE 3/32" = 1'-0"

GENERAL NOTE

SCOPE OF THIS PROJECT DOES NOT INCLUDE ANY ADDITION OR CHANGES IN THE BUILDING AREA AND IN THE NATURE OF THE BUILDING AND IT DOES NOT EFFECT ANY REQUIREMENTS OF EXISTING "H" OCCUPANCIES.

GENERAL NOTES

1. REPLACE EXISTING ROOFING AND ROOF INSULATION WITH NEW STANDING SEAM STEEL ROOF PANELS WITH "KYNAR 500" FINISH AND WITH NEW RIGID BOARD THERMAL INSULATION LAID UNDER NEW ROOFING PANELS AND NEW GALVALUM CORRUGATED STEEL DECK LAID OVER EXISTING STRUCTURAL STEEL PURLINS.
2. REPLACE EXISTING GUTTERS WITH NEW PREFAB STEEL FACTORY FORMED STEEL GUTTERS AND WITH SAME FINISH AND COLOR AS ROOF PANELS.
3. REPLACE EXISTING ROOF CANOPY FASCIA PANELS WITH NEW PREFAB STEEL FACTORY FORMED STEEL PANELS AND WITH SAME FINISH AND COLOR AS ROOF PANELS.
4. REPLACE EXISTING SOFFIT PANELS WITH NEW COMBINATION OF PERFORATED (VENTED) AND NON PERFORATED PANELS, COLOR TO MATCH ROOF PANELS.
5. REPLACE EXISTING DOWNSPOUTS WITH NEW PREFAB STEEL FACTORY FORMED STEEL DOWNSPOUTS WITH "KYNAR 500" FINISH, COMPLETE WITH BENTS, ELBOW AT GRADE LEVEL, OR AT LOWER ROOF LEVEL (WHEREVER DOWNSPOUT DISCHARGES OVER ANOTHER ROOF), AND WITH SAME FINISH AND COLOR AS ROOF PANELS.
6. RE-INSTALL EXISTING SCRUBBER DISCHARGE DUCT AND CAPON NEW ROOF, PROVIDE NEW ROOF CURB AND FLASHING, TO BE SQUARE PITCHED CURB WITH TOP TO ACCEPT ROUND DUCT AND TO HAVE STORM COLLAR TO EXISTING. REFER TO SHEET 3/41I
7. ADD NEW STEEL STRUCTURE AS SHOWN ON 41J THROUGHOUT 41L
8. REBUILD CMU MASONRY AND BRICK VENEER AROUND NEW STEEL COLUMNS AS SHOWN ON DETAILS 3/41E AND 7 AND 8/41H
9. PAINT ALL NEW STEEL STRUCTURE
10. REPAIR/REPAINT STEEL STRUCTURE THAT IS SCRATCHED, PULLED, STAINED OR LOST PAINT INTEGRITY AND SHEEN BECAUSE OF CONSTRUCTION ACTIVITIES IN ALL OTHER AREAS EXCEPT AS NOTED IN NO. 9 ABOVE.

LEGEND

PFE ⊙ PORTABLE FIRE EXTINGUISHER

NOTES

1. PORTABLE FIRE EXTINGUISHERS SHALL GENERALLY COMPLY WITH SECTION 906.1 OF IFC WHEELED UNITS ARE NOT BEING USED- 90610 IFC
2. PORTABLE FIRE EXTINGUISHERS SHALL BE PLACED SUCH THAT FROM ANY POINT IN THE OCCUPIED SPACE TRAVEL DISTANCE TO CLOSEST UNIT SHALL NOT EXCEED 50 FEET.
3. PORTABLE FIRE EXTINGUISHERS SHALL BE TYPE 10-B, FOR LOW HAZARD, WHICH ALLOWS MAXIMUM TRAVEL DISTANCE OF 50 FEET PER TABLE 906.3 (2) OF IFC
4. THE BUILDING IS NOT FIRE-SPRINKLERED.

PANIC HARDWARE NOTES

3 EACH HEAVY DUTY 4 1/2"x 4 1/2" FULLY MORTISE BUTT HINGES
1 EACH CYLINDER, KEY LOCKING/UNLOCKING LATCH FROM OUTSIDE
1 EACH EXIT DEVICE, RELEASING LATCH IN LOCKED OR UNLOCKED CONDITION.
1 EACH LEVER HANDLE ON OUTSIDE DOOR, RELEASING LATCH IN NON-LOCKED CONDITION ONLY.
1 EACH ALUMINUM THRESHOLD WITH VINYL WEATHERSTRIP 3'-0" LONG
1 EACH DOOR BOTTOM, 3'-0" LONG.
1 EACH VINYL WEATHERIZING AROUND DOOR
1 EACH JAMB-MOUNTED OVERHEAD DOOR CLOSER (CLOSER INSTALLED INSIDE BUILDING))
1 EACH FLOOR TYPE DRUM DOOR STOP FINISHED METAL & BLACK RUBBER

LEGEND

W 1 / 41G — REFERS TO WALL SECTION.
1 / 41G — REFERS TO DETAIL SECTION.

No.	DATE	X	REVISIONS	X	APP.
1					

SWTP
Surface Water Transmission Program

Lockwood, Andrews & Newnam, Inc.
A LEO A DALY COMPANY
2925 Briarpark Drive Houston, TX 77042

REGISTERED ARCHITECT — DENNIS KALANTZIS — 9852 — STATE OF TEXAS
Apr 1/2011

CITY OF HOUSTON
DEPARTMENT OF PUBLIC WORKS AND ENGINEERING

SWTP CONTRACT 74A-1

CHLORINE BUILDING
NEW PLANS AND ELEVATIONS

WBS NO.	S-000900-109-4
DRAWING SCALE	1/8" = 1'-0"
CITY OF HOUSTON PM	ARTHUR MORRIS, P.E.
SHEET NO.	41B OF 208

PUBLIC WORKS AND ENGINEERING — ACCEPTED AND FILED — 48226 — CITY OF HOUSTON, TEXAS

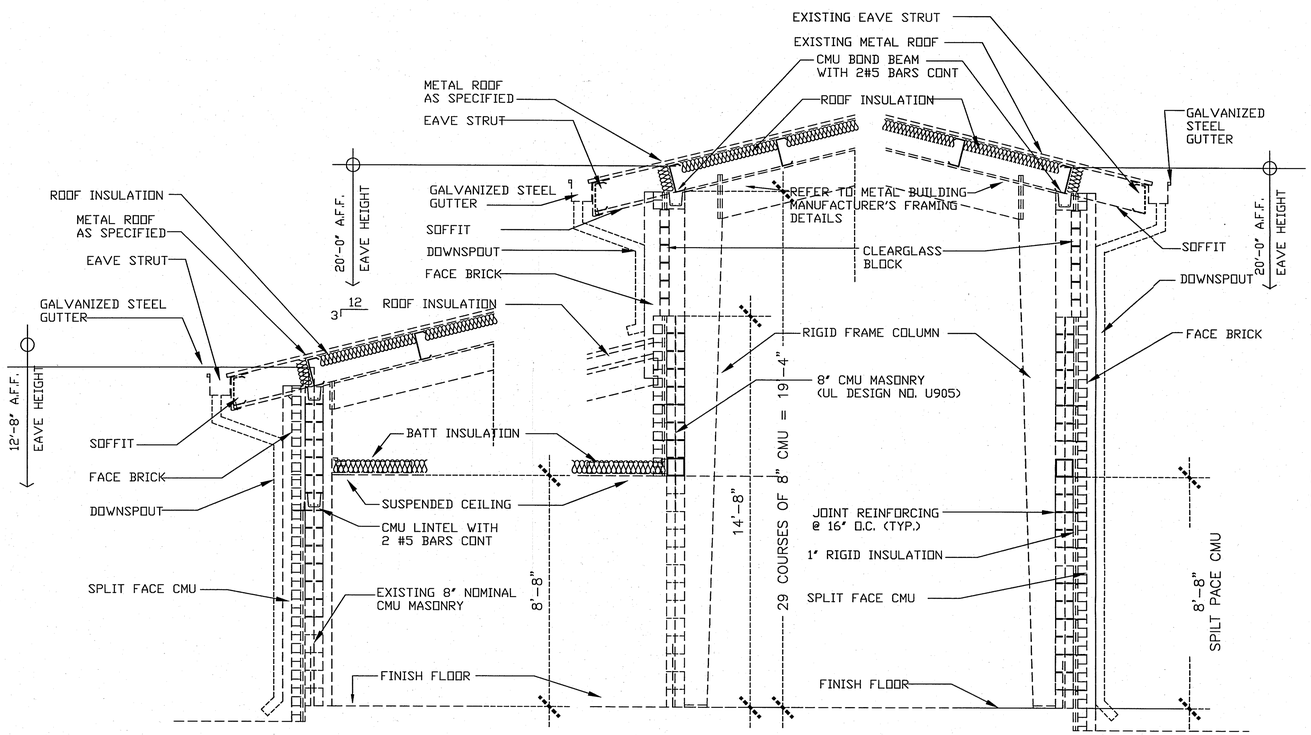

7/41C **EXIST. WALL SECTION** SCALE 3/8" = 1'-0"

6/41C **EXIST. WALL SECTION** SCALE 3/8" = 1'-0"

5/41C **EXIST. WALL SECTION** SCALE 3/8" = 1'-0"

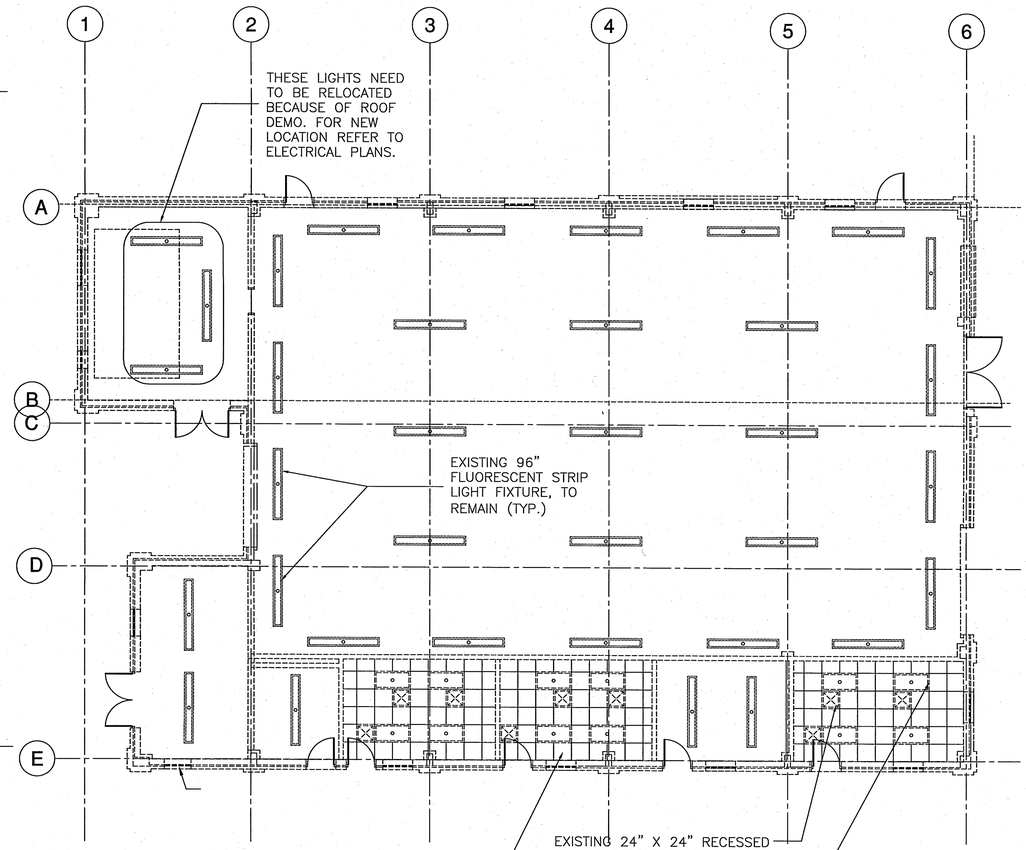

4/41C **REFLECTED CEILING PLAN** SCALE 1/8" = 1'-0"

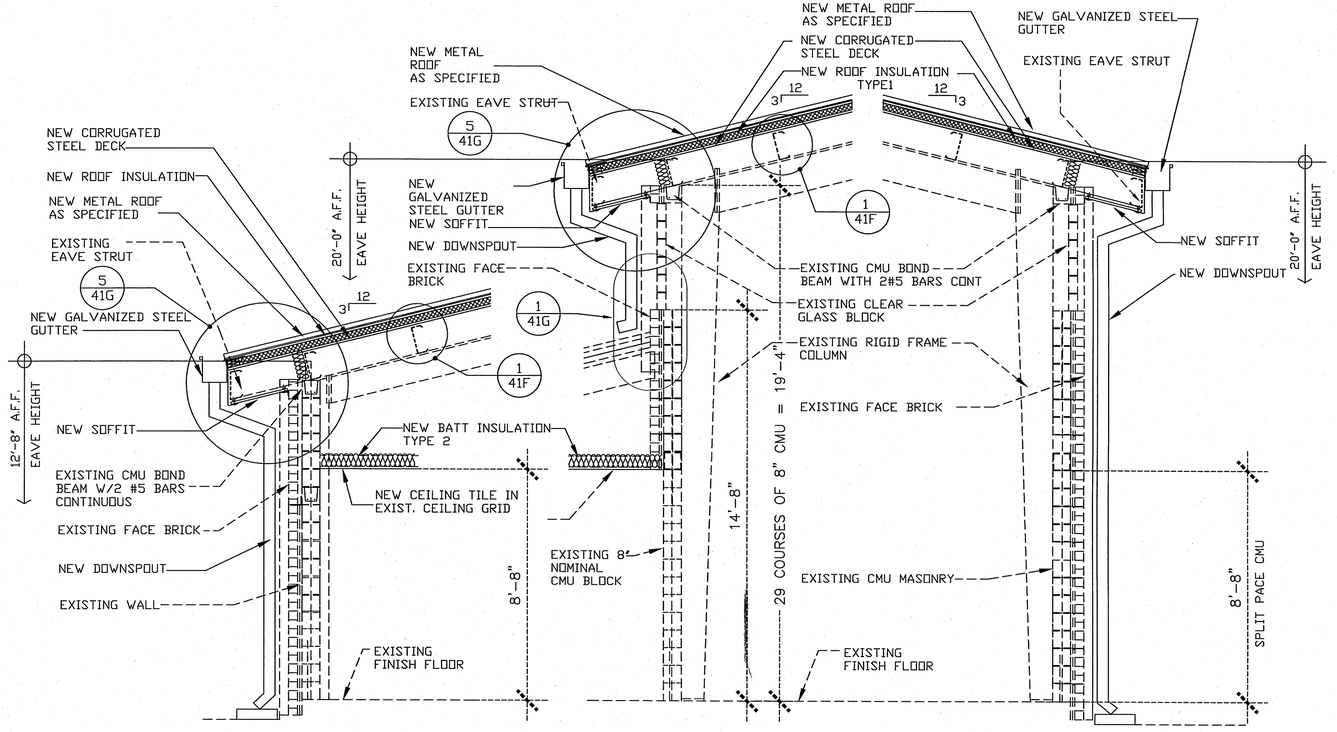

3/41C **NEW WALL SECTION** SCALE 3/8" = 1'-0"

2/41C **NEW WALL SECTION** SCALE 3/8" = 1'-0"

1/41C **NEW WALL SECTION** SCALE 3/8" = 1'-0"

GENERAL NOTE

SCOPE OF THIS PROJECT DOES NOT INCLUDE ANY ADDITION OR CHANGES IN THE BUILDING AREA AND IN THE NATURE OF THE BUILDING AND IT DOES NOT EFFECT ANY REQUIREMENTS OF EXISTING "H" OCCUPANCIES.

NOTE:

ALL ROOF PANEL, GUTTERS, DOWNSPOUTS, FASCIA AND SOFFIT PANELS, EXPOSED FLASHING AND TRIMS TO HAVE "KYNAR 500" FINISH

No.	DATE	REVISIONS	APP.
1	X	X	

SWTP
Surface Water Transmission Program

Lockwood, Andrews & Newnam, Inc.
A LED A DALY COMPANY
2925 Briarpark Drive Houston, TX 77042

REGISTERED ARCHITECT — OMAR SALAMANDA — 9952 — STATE OF TEXAS
03/08/2011

CITY OF HOUSTON
DEPARTMENT OF PUBLIC WORKS AND ENGINEERING

SWTP CONTRACT 74A-1

CHLORINE BUILDING
REFLECTED CEILING PLAN

WBS NO.	S-000900-109-4
DRAWING SCALE	1/8" = 1'-0"
CITY OF HOUSTON PM	ARTHUR MORRIS, P.E.
SHEET NO.	41C OF 208

PUBLIC WORKS AND ENGINEERING — ACCEPTED AND FILED — 48326

DEMO NOTES:

1. ALL EXISTING ROOFS, INCLUDING INSTALLATION, UNDERLAYMENT, GUTTER AND DOWNSPOUTS, SOFFIT AND FASCIA PANELS SHALL BE DEMOLISHED AND REMOVED FROM JOBSITE AND SHALL BE DUMPED IN A LEGAL DUMPING SITE.
2. EXISTING STEEL STRUCTURE INCLUDING MAIN FRAMES, PURLINS, GIRTS ETC., SHALL REMAIN IN PLACE AND WITHOUT DAMAGE. SHOULD THERE BE ANY DAMAGES INCURRED TO STEEL STRUCTURE OR OTHER PARTS OF THE BUILDING BECAUSE OF ROOF DEMOLITION, THE DAMAGED PARTS SHALL BE REPAIRED TO ITS ORIGINAL CONDITION.

GENERAL NOTE:
1. FOR NEW ROOFING, GUTTER AND DOWNSPOUT DETAILS REFER TO ALL DETAILS ON SHEETS 41F THRU 41I

GENERAL NOTE

SCOPE OF THIS PROJECT DOES NOT INCLUDE ANY ADDITION OR CHANGES IN THE BUILDING AREA AND IN THE NATURE OF THE BUILDING AND IT DOES NOT EFFECT ANY REQUIREMENTS OF EXISTING "H" OCCUPANCIES.

No.	DATE	REVISIONS	APP.
1	X	X	

NOTE:

ALL ROOF PANEL, GUTTERS, DOWNSPOUTS, FASCIA AND SOFFIT PANELS, EXPOSED FLASHING AND TRIMS TO HAVE "KYNAR 500" FINISH

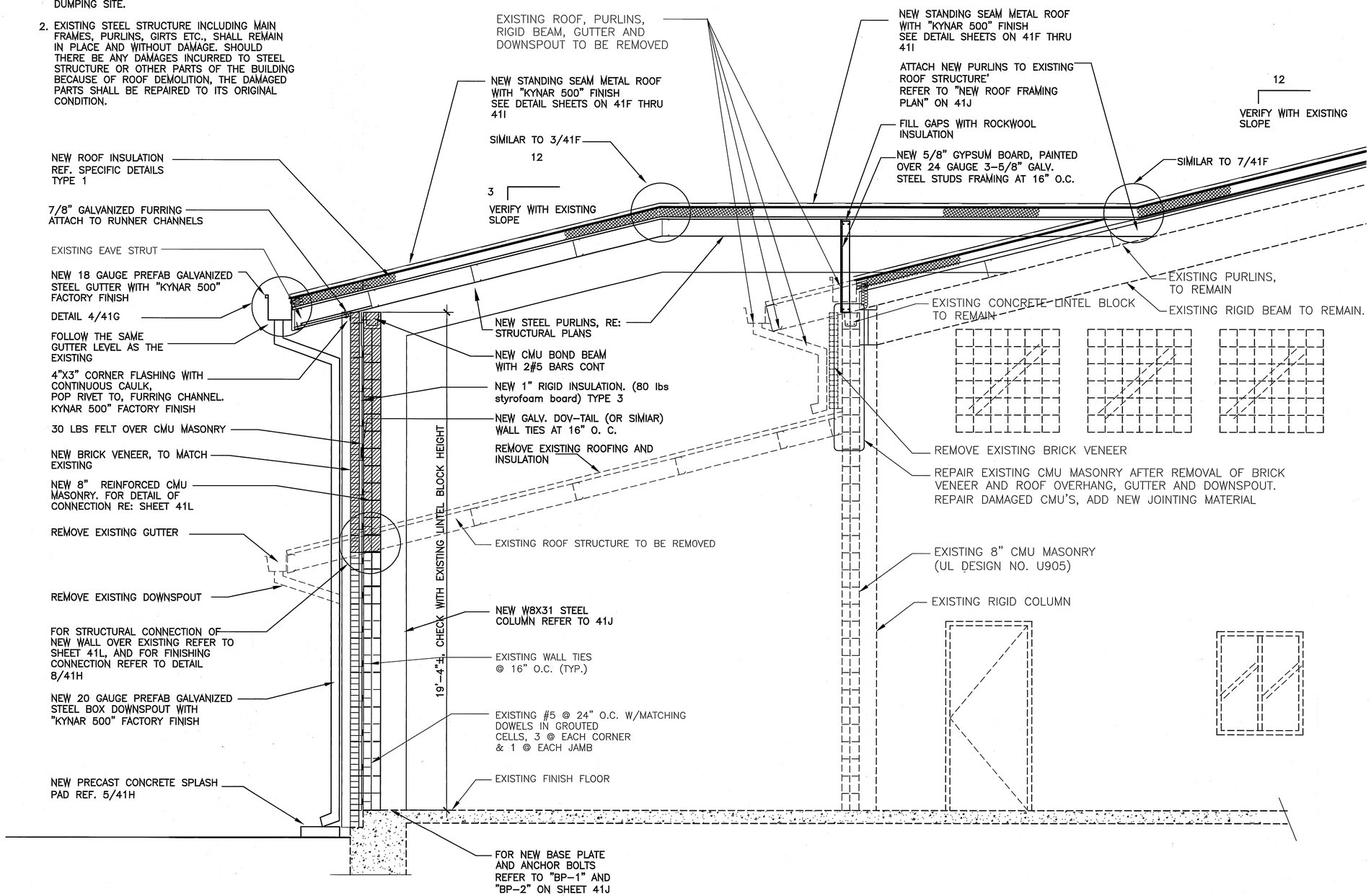

1 / 41D BUILDING SECTION
SCALE 1/2" = 1'-0"

SWTP
Surface Water Transmission Program

Lockwood, Andrews & Newnam, Inc.
A LEO A DALY COMPANY
2925 Briarpark Drive Houston, TX 77042

REGISTERED ARCHITECT EDWARD KALNITSKY 8952 STATE OF TEXAS
03/08/2011

CITY OF HOUSTON
DEPARTMENT OF PUBLIC WORKS AND ENGINEERING

SWTP CONTRACT 74A-1

CHLORINE BUILDING
SCRUBBER WING SECTION 1 OF 2

WBS NO.
S-000900-109-4

DRAWING SCALE

CITY OF HOUSTON PM
ARTHUR MORRIS, P.E.

SHEET NO.41D OF 208

PUBLIC WORKS AND ENGINEERING ACCEPTED AND FILED 48326 CITY DRAWING NUMBER HOUSTON, TEXAS

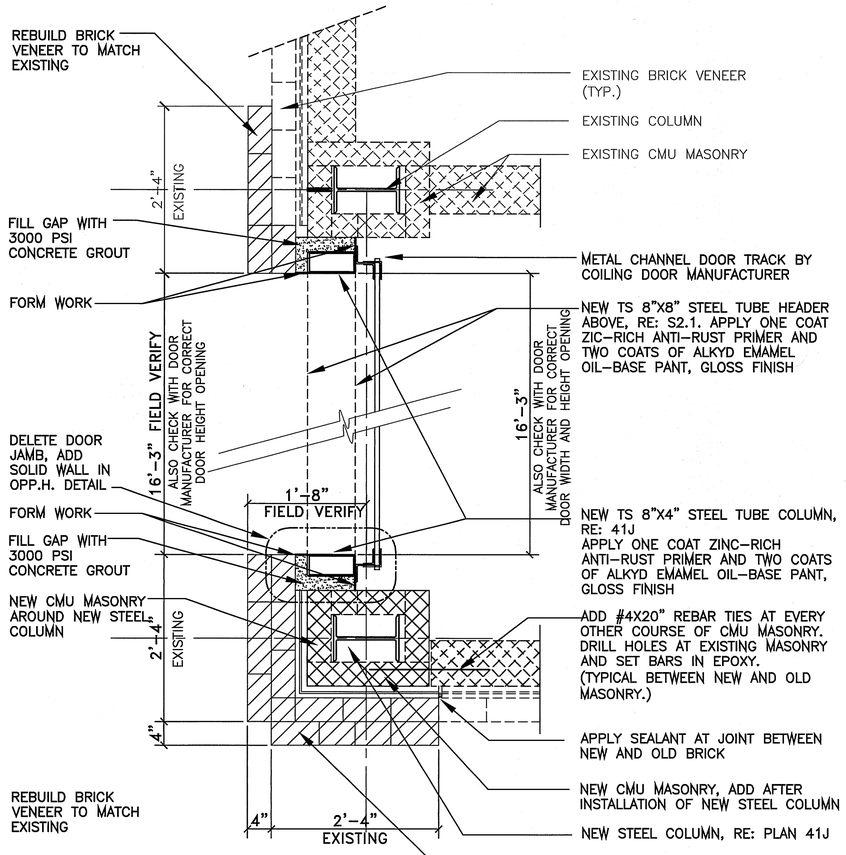

NOTE:
THE BUILDING CONTRACTOR SHOULD CHECK THE CLEAR OPENING REQUIRED FOR THE INSTALLATION OF COILING DOOR WITH THE DOOR MANUFACTURER.

3/41E NEW COILING DOOR-JAMB DETAIL
SCALE 1" = 1'-0"

OPP. H. 3/41E NO DOOR AT OPP. H., ADD SOLID WALL INSTEAD
SCALE 1" = 1'-0"

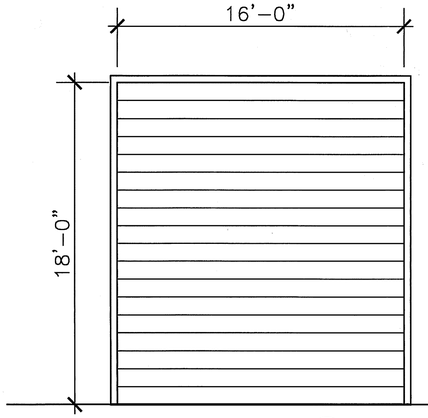

GENERAL SPECIFICATION OF THE DOOR

- –OPERATION: ELECTRIC MOTOR 1/2 HP, GEARHEAD–HORIZONTAL, INSULATED STEEL SLATS COILING DOOR. AND WITH EMERGENCY CHAIN OPERATION SUSTEM.
- –TYPE OF INSTALLATION: FACE OF THE WALL MOUNTED, INSIDE
- –FINISH: COLOR COTE (POWDER COATED BAKED ENAMEL) .
- –COLOR: WILL BE SELECTED FROM MANUFACTURER'S STANDARD COLOR CHART.
- –NOMINAL SIZE: 16 FT WIDE BY 18 FT HIGH
- –ACTUAL SIZE: TO BE FIELD MEASURED FROM CONSTRUCTED OPENING.

NOTE:
PROVIDE SHOP DRAWING FOR APPROVAL.

2/41E ROLL-UP DOOR ELEVATION
SCALE 1/4" = 1'-0"

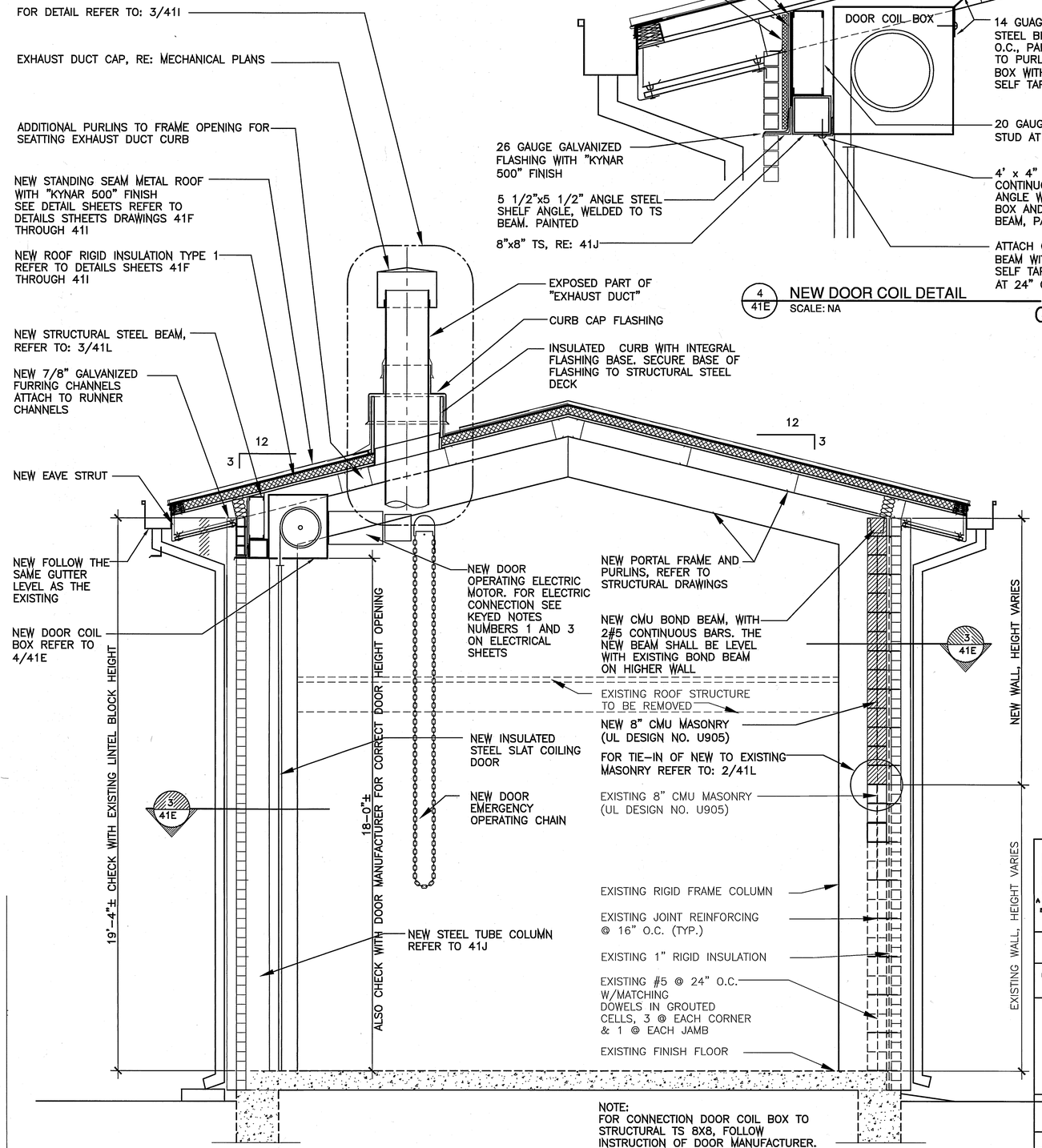

NOTE:
FOR CONNECTION DOOR COIL BOX TO STRUCTURAL TS 8X8, FOLLOW INSTRUCTION OF DOOR MANUFACTURER. ADDITIONAL SUPPORT BRACKETS MAY BE REQUIRED FOR SUPPORT OF MOTOR PER DOOR MANUFACTURER.

1/41E BUILDING SECTION
SCALE 1/2" = 1'-0"

4/41E NEW DOOR COIL DETAIL
SCALE: NA

GENERAL NOTE

SCOPE OF THIS PROJECT DOES NOT INCLUDE ANY ADDITION OR CHANGES IN THE BUILDING AREA AND IN THE NATURE OF THE BUILDING AND IT DOES NOT EFFECT ANY REQUIREMENTS OF EXISTING "H" OCCUPANCIES.

NOTES:

1. ALL ROOF PANEL, GUTTERS, DOWNSPOUTS, FASCIA AND SOFFIT PANELS, EXPOSED FLASHING AND TRIMS TO HAVE "KYNAR 500" FINISH
2. FOR CURB DETAIL SEE SHEET 41I
3. FOR NEW ROOFING, GUTTER AND DOWNSPOUT DETAILS REFER TO ALL DETAILS ON SHEETS 41F THRU 41I

No.	DATE	REVISIONS	APP.
1	X	X	

SWTP
Surface Water Transmission Program

Lockwood, Andrews & Newnam, Inc.
A LEO A DALY COMPANY
2925 Briarpark Drive Houston, TX 77042

REGISTERED ARCHITECT EDWARD KALLENBERG 0002 STATE OF TEXAS
Edward Kallenberg 03/08/2011

CITY OF HOUSTON
DEPARTMENT OF PUBLIC WORKS AND ENGINEERING

SWTP CONTRACT 74A-1

CHLORINE BUILDING
SCRUBBER WING SECTION 2 OF 2

WBS NO. S-000900-109-4
DRAWING SCALE
CITY OF HOUSTON PM
ARTHUR MORRIS, P.E.
SHEET NO. 41E OF 208

PUBLIC WORKS AND ENGINEERING ACCEPTED AND FILED 48326 CITY DRAWING FILE NO. HOUSTON, TEXAS

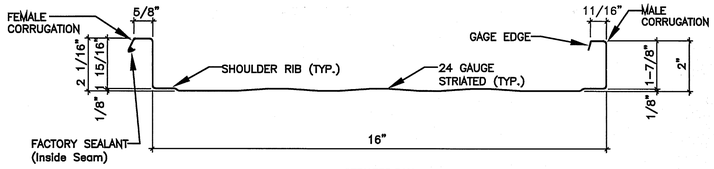

STRIATED PAN

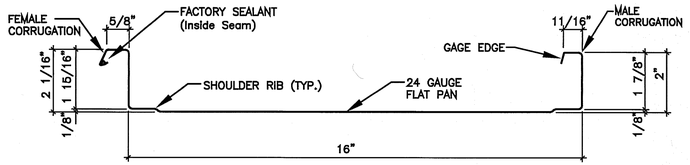

FLAT PAN

6 / 41F DETAIL
NOT TO SCALE

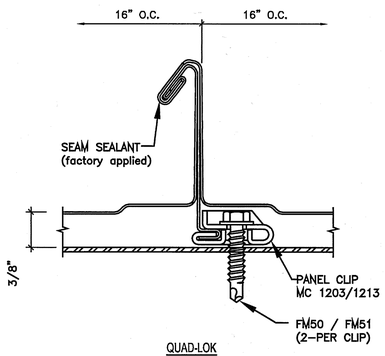

QUAD-LOK

5 / 41F TYPICAL SEAM DETAIL
NOT TO SCALE

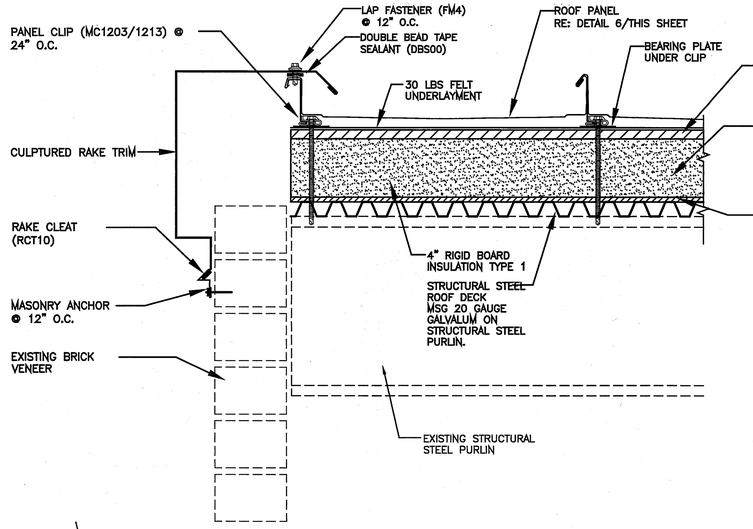

4 / 41F INSULATED DECK DETAIL-RAKE
NOT TO SCALE

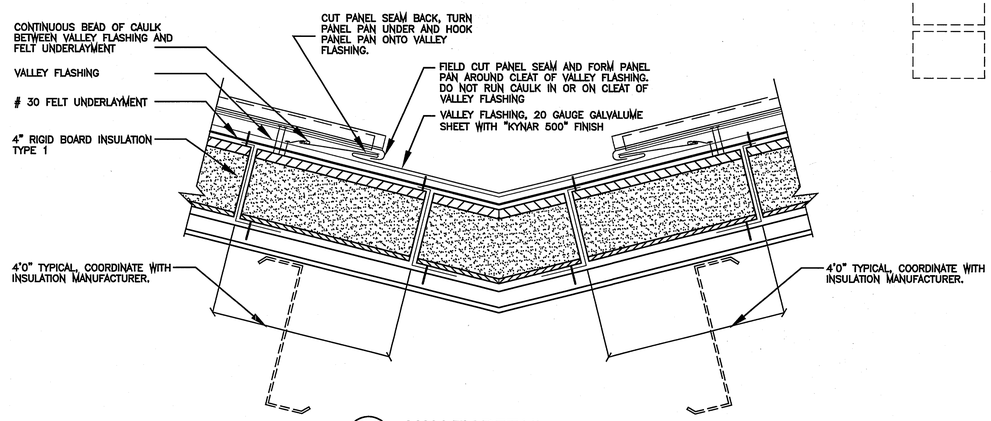

7 / 41F VALLEY DETAIL
NOT TO SCALE

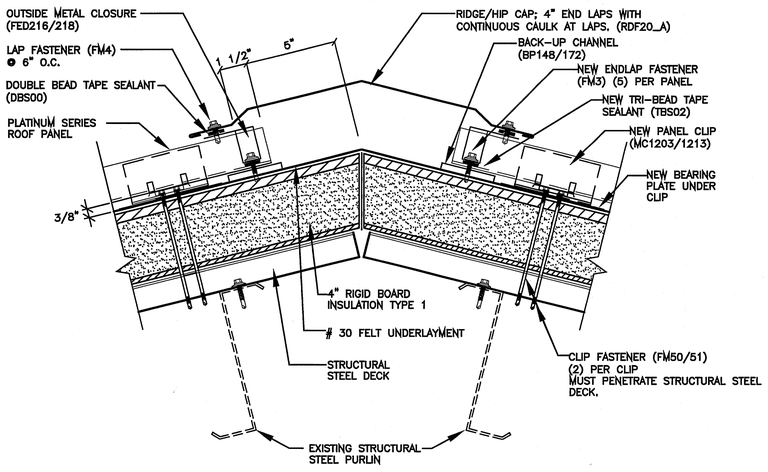

NOTES

1. FIELD CUT METAL CLOSURE TO FIT BETWEEN PANEL SEAMS AT HIPS AND AT RIDGE
2. ALL FELT UNDERLAYMENT, CAULKING, AND FASTENERS, ARE ITEMS TO BE FURNISHED AND INSTALLED BY THE ROOFING INSTALLER AT THE DISCRETION OF THE ARCHITECT.

3 / 41F INSULATED DECK DETAIL-RIDGE/HIP
NOT TO SCALE

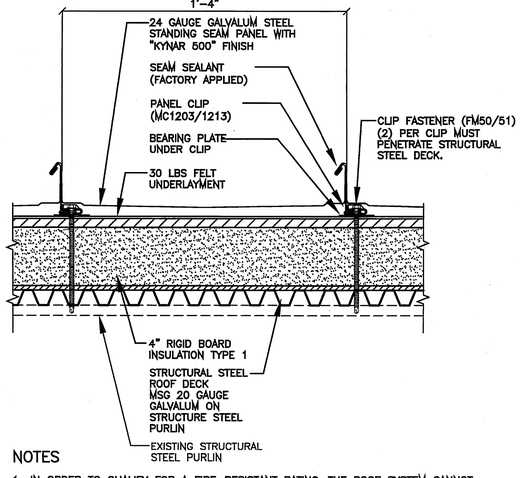

NOTES

1. IN ORDER TO QUALIFY FOR A FIRE-RESISTANT RATING, THE ROOF SYSTEM CANNOT MAKE A PENETRATION IN THE INSULATION SYSTEM. THE PANEL, IN ORDER TO MAKE A POSITIVE ATTACHMENT, MUST BE ATTACHED TO THE STEEL DECK.
2. THIS ASSEMBLY QUALIFIES FOR THE FOLLOWING UL FIRE-RESISTANT ROOF ASSEMBLIES: UL DESIGN NO. P512.
3. ADDITIONAL INFORMATION REGARDING THIS ASSEMBLY IS AVAILABLE IN THE UL FIRE RESISTANCE DIRECTORY.

2 / 41F INSULATED DECK DETAIL
NOT TO SCALE

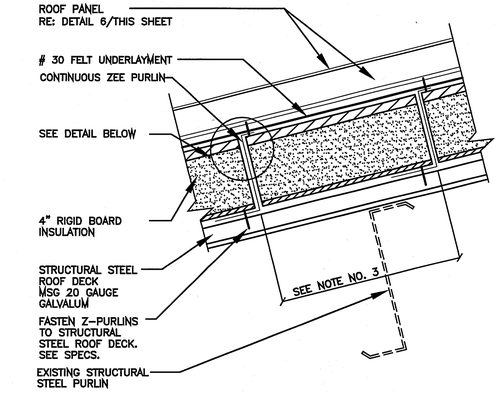

NOTES

1. ALL FELT UNDERLAYMENT, STRUCTURAL MEMBERS, CORRUGATED DECK, AND INSULATING MATERIAL, ARE ITEMS TO BE FURNISHED AND INSTALLED BY CONTRACTOR AT THE DISCRETION OF THE ARCHITECT.
2. PURLIN SPACING AND FASTENER TYPE WILL BE DEPENDENT ON GOVERNING CODE AND SPECIFICATION REQUIREMENTS.
3. 4'-0" TYPICAL, COORDINATE WITH INSULATION MANUFACTURER.

1 / 41F INSULATED DECK DETAIL
NOT TO SCALE

GENERAL NOTE

SCOPE OF THIS PROJECT DOES NOT INCLUDE ANY ADDITION OR CHANGES IN THE BUILDING AREA AND IN THE NATURE OF THE BUILDING AND IT DOES NOT EFFECT ANY REQUIREMENTS OF EXISTING "H" OCCUPANCIES.

GENERAL NOTE:

ON THIS SHEET EVERYTHING IS NEW UNLESS OTHERWISE NOTED AS EXISTING

NOTE:

ALL ROOF PANEL, GUTTERS, DOWNSPOUTS, FASCIA AND SOFFIT PANELS, EXPOSED FLASHING AND TRIMS TO HAVE "KYNAR 500" FINISH

No.	DATE	REVISIONS	APP.
1	X	X	

SWTP
Surface Water Transmission Program

Lockwood, Andrews & Newnam, Inc.
A LEO A DALY COMPANY
2925 Briarpark Drive Houston, TX 77042

REGISTERED ARCHITECT EDWARD GALLENKAMP 40055 STATE OF TEXAS
03/08/2011

CITY OF HOUSTON
DEPARTMENT OF PUBLIC WORKS AND ENGINEERING

SWTP CONTRACT 74A-1

CHLORINE BUILDING
TYPICAL ROOF DETAILS

WBS NO. S-000900-109-4	
DRAWING SCALE	
NOT TO SCALE	
CITY OF HOUSTON PM	
ARTHUR MORRIS, P.E.	
SHEET NO. 41F OF 208	

ACCEPTED AND FILED 48326 CITY OF HOUSTON, TEXAS

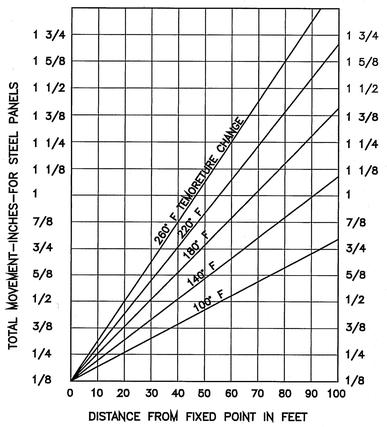

EXPANSION AND CONTRACTION OF METAL PANELS OVER 30 FEET IN LENGTH, DUE TO LONGITUDINAL THERMAL MOVEMENT, MUST BE CONSIDERED IN BOTH DESIGN AND INSTALLATION. THE ABOVE CHART EMPHASIZED THE NEED TO PROVIDE AMPLE CLEARANCES FOR GUTTERS. RIDGES, ENDWALLS, ETC.

MAXIMUM TEMPERATURE SHOULD BE NO LOWER THAN 140° F FOR WHITE PANELS, UP TO 180° F FOR DARK PAINTED PANELS, REGARDLESS OF AMBIENT MAXIMUM. MINIMUM SHOULD BE FIGURED WELL BELOW AMBIENT MINIMUM TO ALLOW FOR RADIATION TO NIGHT SKY, IN ANY CASE, A MINIMUM OF 100° F DIFFERENTIAL IS RECOMMENDED.

6 / 41G NOMINAL LINEAR EXPANSION CHART
NOT TO SCALE

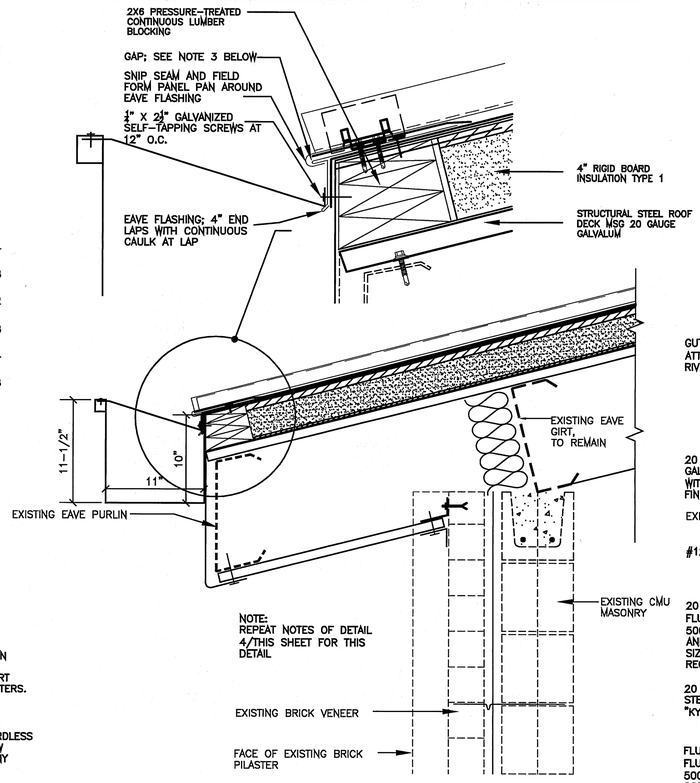

5 / 41G SOFFIT AND GUTTER DETAIL
NOT TO SCALE
(SECTION AT SOLID WALL)

GENERAL NOTE:
ON THIS SHEET EVERYTHING IS NEW UNLESS OTHERWISE NOTED AS EXISTING

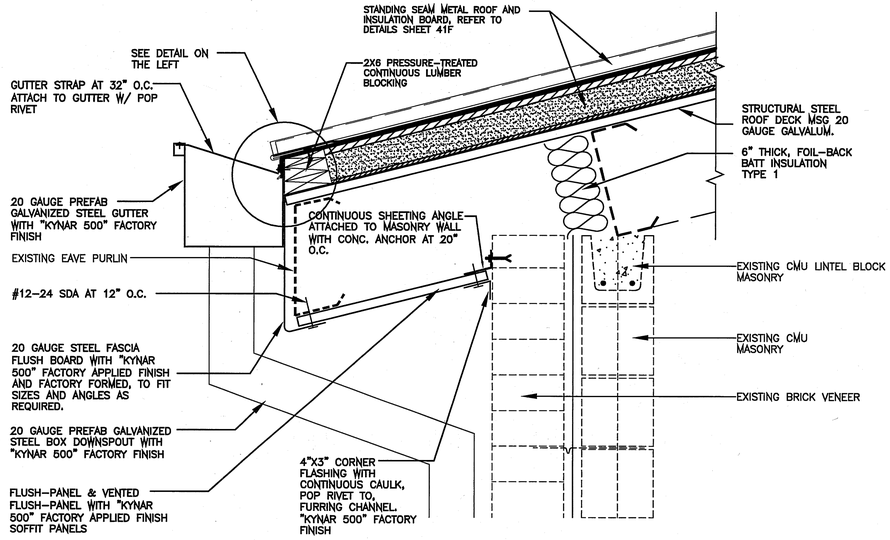

4 / 41G SOFFIT, GUTTER AND DOWNSPOUT DETAIL
NOT TO SCALE
(SECTION AT WINDOW OR AT GLAZED WALL)

GENERAL NOTE

SCOPE OF THIS PROJECT DOES NOT INCLUDE ANY ADDITION OR CHANGES IN THE BUILDING AREA AND IN THE NATURE OF THE BUILDING AND IT DOES NOT EFFECT ANY REQUIREMENTS OF EXISTING "H" OCCUPANCIES.

NOTE:

ALL ROOF PANEL, GUTTERS, DOWNSPOUTS, FASCIA AND SOFFIT PANELS, EXPOSED FLASHING AND TRIMS TO HAVE "KYNAR 500" FINISH

No.	DATE	REVISIONS	APP.
1	X	X	

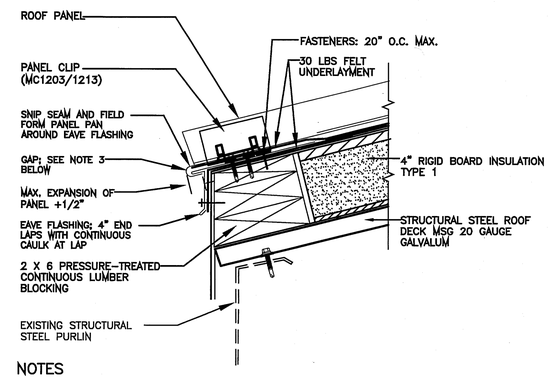

NOTES

1. THIS DETAIL IS RECOMMENDED FOR AREAS WITH HEAVY SNOW LOADS OR WHERE EXPANSION AND CONTRACTION OF PANELS IS A DESIGN FACTOR.
2. THE GAP BETWEEN EAVE FLASHING AND PANEL (SEE DETAIL ABOVE) CAN BE INCREASED TO ALLOW FOR LINEAR EXPANSION AND CONTRACTION OF PANELS. NOTE 1/2" OF PANEL PAN MUST BE ENGAGED WITH EAVE FLASHING WHEN PANEL HAS EXPANDED TO ITS MAXIMUM LENGTH. REFER TO LINEAR EXPANSION CHART.
3. GAP BETWEEN EAVE FLASHING AND PANEL MUST BE ADJUSTED TO SUIT TEMPERATURE DURING INSTALLATION.
4. ALL FELT UNDERLAYMENT, CAULKING, AND FASTENERS, ARE ITEMS TO BE FURNISHED AND INSTALLED BY THE ROOFING INSTALLER AT THE DISCRETION OF THE ARCHITECT.

2 / 41G EAVE DETAIL WITH REGLET FLASHING
NOT TO SCALE

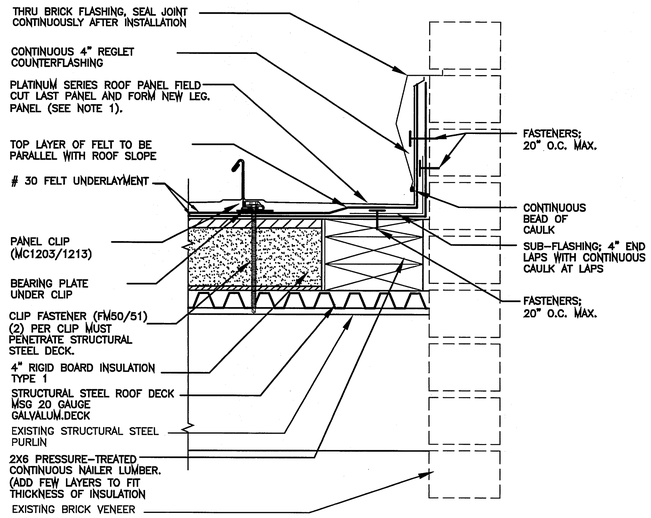

NOTES

1. FIELD CUT LAST PANEL AND FORM NEW LEG. PANEL MUST BE CONTINUOUS FROM RIDGE TO EAVE.
2. ALL FELT UNDERLAYMENT, CAULKING, AND FASTENERS, ARE ITEMS TO BE FURNISHED AND INSTALLED BY THE ROOFING INSTALLER AT THE DISCRETION OF THE ARCHITECT.

2 / 41G RAKE WALL DETAIL WITH REGLET FLASHING
NOT TO SCALE

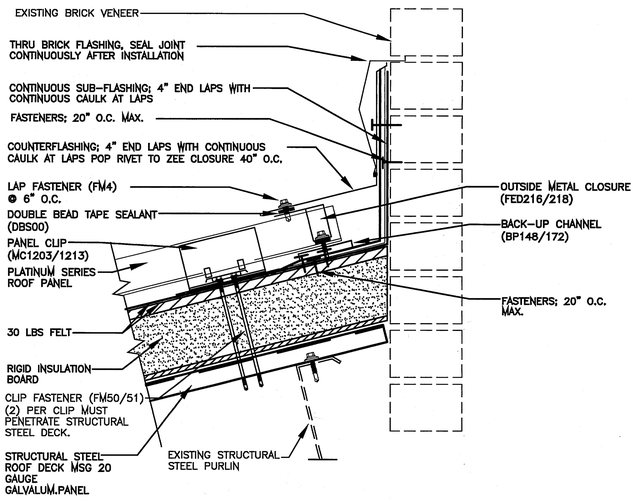

NOTES

1. FIELD CUT ZEE CLOSURE TO FIT BETWEEN PANEL SEAMS IF PANELS ARE NOT PERPENDICULAR TO WALL.
2. ALL FELT UNDERLAYMENT, CAULKING, AND FASTENERS, ARE ITEMS TO BE FURNISHED AND INSTALLED BY THE ROOFING INSTALLER AT THE DISCRETION OF THE ARCHITECT.

1 / 41G HEAD WALL DETAIL WITH REGLET FLASHING
NOT TO SCALE

SWTP
Surface Water Transmission Program

Lockwood, Andrews & Newnam, Inc.
A LEO A DALY COMPANY
2925 Briarpark Drive Houston, TX 77042

REGISTERED ARCHITECT
EDWARD GALVAN EVANS
23952
STATE OF TEXAS
03/08/2011

CITY OF HOUSTON
DEPARTMENT OF PUBLIC WORKS AND ENGINEERING

SWTP CONTRACT 74A–1

CHLORINE BUILDING
SOFFIT, GUTTER AND ROOF DETAILS

WBS NO. S–000900–109–4	
DRAWING SCALE	
NOT TO SCALE	
CITY OF HOUSTON PM	
ARTHUR MORRIS, P.E.	
SHEET NO.41G OF 208	

PUBLIC WORKS AND ENGINEERING
ACCEPTED AND FILED
48326
CITY SECRETARY
HOUSTON, TEXAS

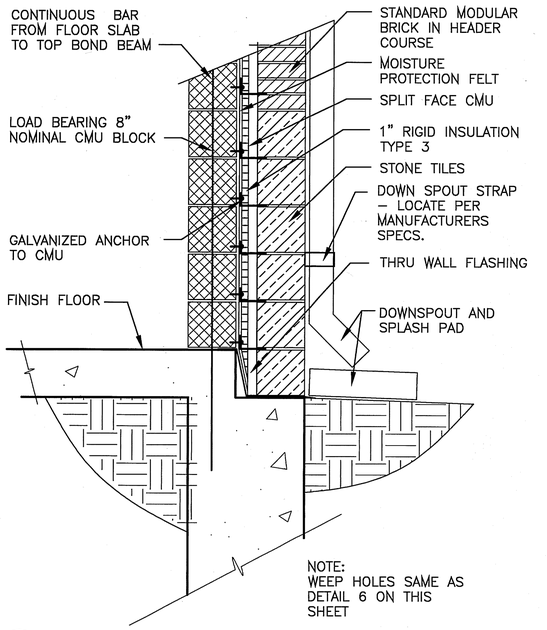

7 / 41H TYPICAL EXTERIOR WALL DETAIL AT PILASTER
SCALE 1" = 1'-0"

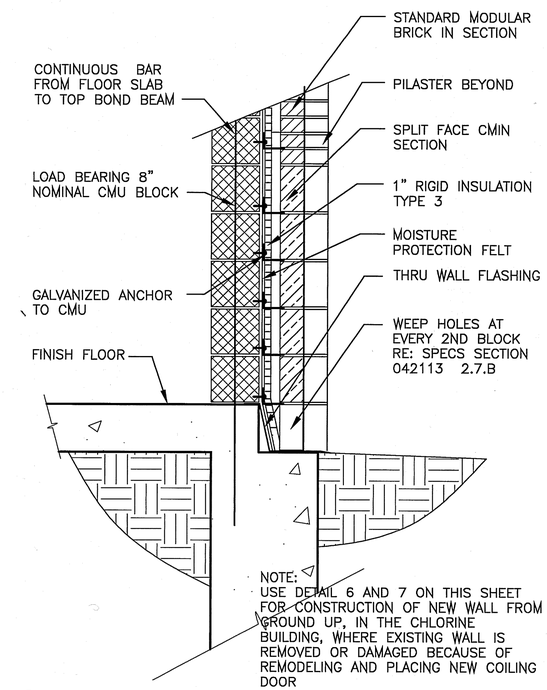

6 / 41H TYPICAL EXTERIOR WALL DETAIL
SCALE 1" = 1'-0"

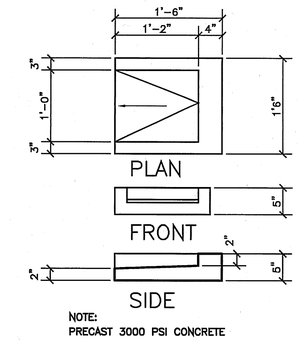

5 / 41H PREFAB CONCRETE SPLASH PAD
SCALE 1" = 1'-0"

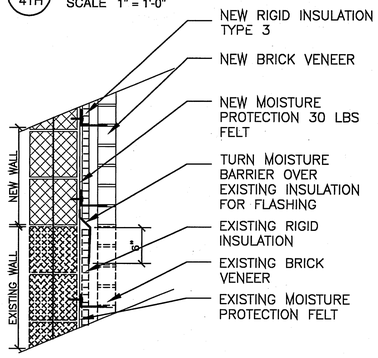

8 / 41H WALL EXTENTION DETAIL
SCALE 3" = 1'-0"

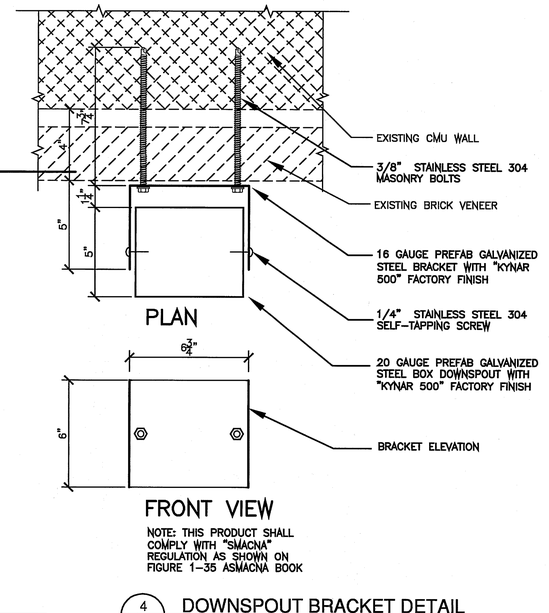

4 / 41H DOWNSPOUT BRACKET DETAIL
SCALE 3" = 1'-0"

GENERAL NOTE

SCOPE OF THIS PROJECT DOES NOT INCLUDE ANY ADDITION OR CHANGES IN THE BUILDING AREA AND IN THE NATURE OF THE BUILDING AND IT DOES NOT EFFECT ANY REQUIREMENTS OF EXISTING "H" OCCUPANCIES.

NOTE:

ALL ROOF PANEL, GUTTERS, DOWNSPOUTS, FASCIA AND SOFFIT PANELS, EXPOSED FLASHING AND TRIMS TO HAVE "KYNAR 500" FINISH

No.	DATE	REVISIONS	APP.
1	X	X	

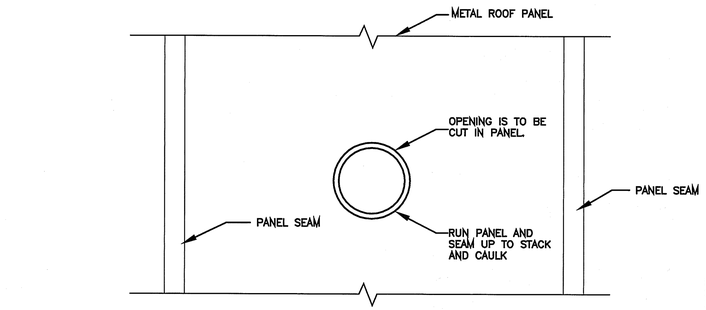

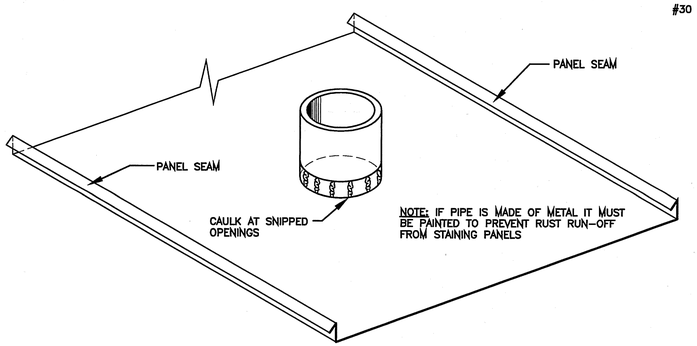

3 / 41H PIPE PENETRATION-ISOMETRIC VIEW
NOT TO SCALE

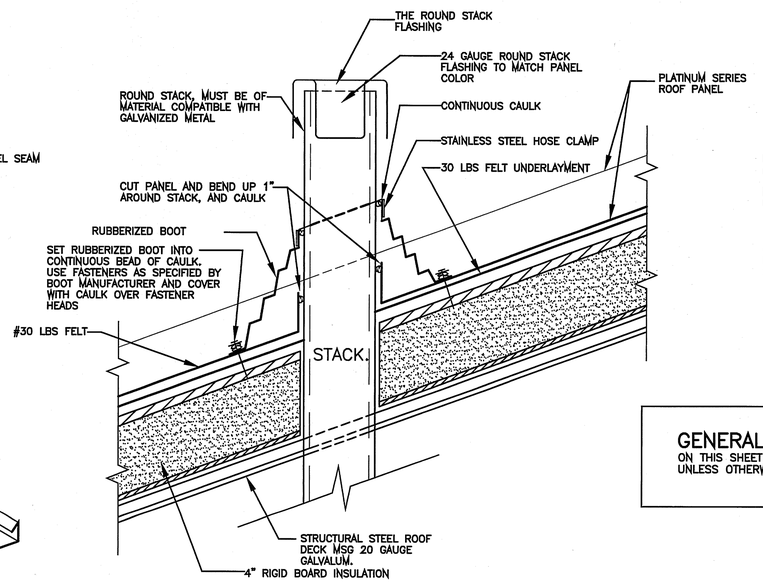

2 / 41H PIPE PENETRATION DETAIL THROUGH PANEL SECTION PERPENDICULAR TO PURLINS
NOT TO SCALE

GENERAL NOTE:
ON THIS SHEET EVERYTHING IS NEW UNLESS OTHERWISE NOTED AS EXISTING

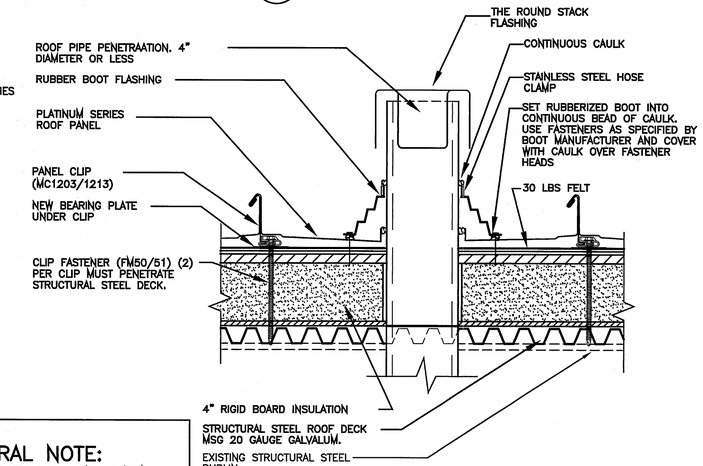

NOTE: POSITION SQUARE BASED BOOTS IN A DIAMOND ORIENTATION WHERE POSSIBLE TO AID IN DIVERTING WATER

NOTE: PIPE PENETRATION TO BE IN PAN OF PANEL ONLY

NOTE: FIELD CUT HOLE IN PANEL 1" LESS THAN DIA. OF STACK. BACK CUT HOLE AND BEND PANEL UP AROUND STACK. CAULK CONTINUOUS.

NOTE: IF PANELS ARE 30' OR LONGER, CUT HOLE TO ALLOW FOR THERMAL MOVEMENT.

NOTE: IF PIPE IS MADE OF METAL IT MUST BE PAINTED TO PREVENT RUST RUN-OFF FROM STAINING PANELS

1 / 41H PIPE PENETRATION DETAIL THROUGH PANEL SECTION ALONG PURLINS
NOT TO SCALE

SWTP
Surface Water Transmission Program

Lockwood, Andrews & Newnam, Inc.
A LEO A DALY COMPANY
2925 Briarpark Drive Houston, TX 77042

REGISTERED ARCHITECT
DAVID ELLINGWOOD
STATE OF TEXAS
03/08/2011

CITY OF HOUSTON
DEPARTMENT OF PUBLIC WORKS AND ENGINEERING
SWTP CONTRACT 74A-1
CHLORINE BUILDING
ROOF PENETRATION DETAILS 1 OF 2

WBS NO. S-000900-109-4	
DRAWING SCALE	
NOT TO SCALE	
CITY OF HOUSTON PM	
ARTHUR MORRIS, P.E.	
SHEET NO.41H OF 208	

ACCEPTED AND FILED
48936
CITY OF HOUSTON
MEMBER FILING

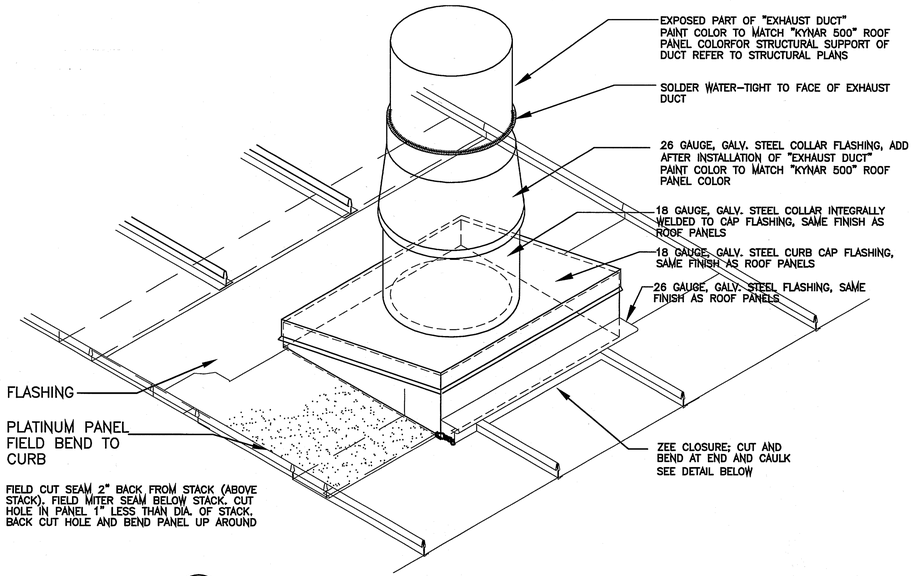

4/411 ROUND PENETRATION W/ SQ. BASE & CURB - ISOMETRIC
NOT TO SCALE

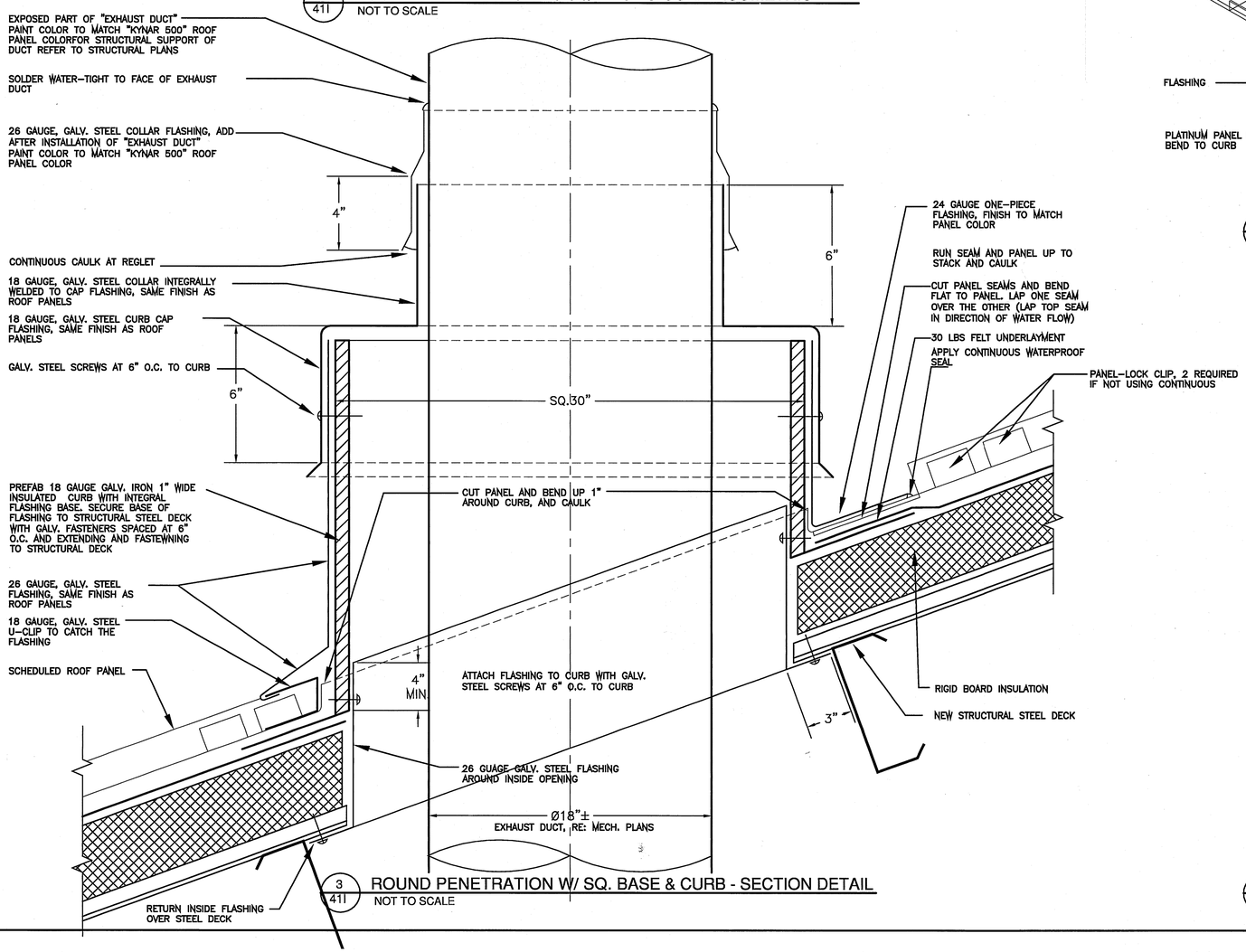

3/411 ROUND PENETRATION W/ SQ. BASE & CURB - SECTION DETAIL
NOT TO SCALE

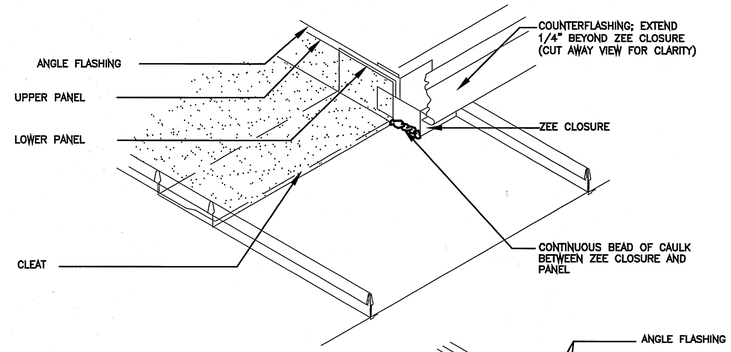

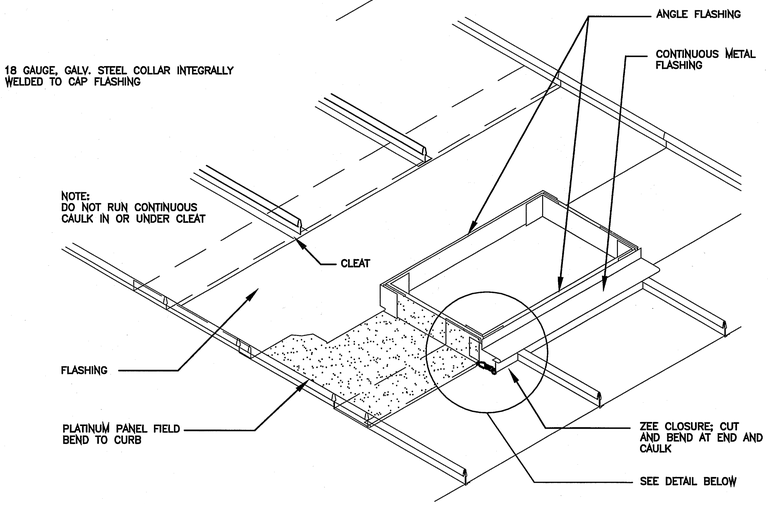

2/411 SQUARE PENETRATION DETAIL - ISOMETRIC VIEW
NOT TO SCALE

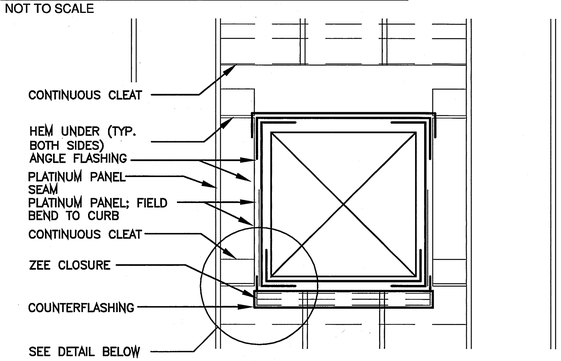

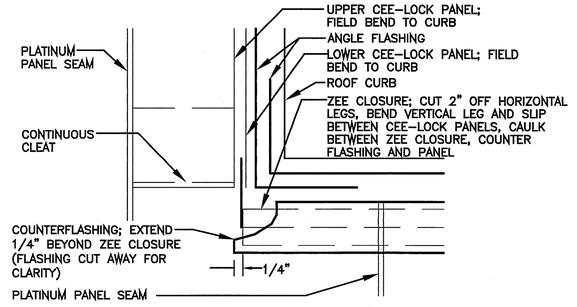

1/411 SQUARE PENETRATION DETAIL - PLAN VIEW
NOT TO SCALE

GENERAL NOTE

SCOPE OF THIS PROJECT DOES NOT INCLUDE ANY ADDITION OR CHANGES IN THE BUILDING AREA AND IN THE NATURE OF THE BUILDING AND IT DOES NOT EFFECT ANY REQUIREMENTS OF EXISTING "H" OCCUPANCIES.

NOTE:

ALL ROOF PANEL, GUTTERS, DOWNSPOUTS, FASCIA AND SOFFIT PANELS, EXPOSED FLASHING AND TRIMS TO HAVE "KYNAR 500" FINISH

No.	DATE	REVISIONS	APP.
1	X	X	

SWTP
Surface Water Transmission Program

Lockwood, Andrews & Newnam, Inc.
A LEO A DALY COMPANY
2925 Briarpark Drive Houston, TX 77042

REGISTERED ARCHITECT EDMUND KALINTARIS 9083 STATE OF TEXAS
03/08/2011

CITY OF HOUSTON
DEPARTMENT OF PUBLIC WORKS AND ENGINEERING
SWTP CONTRACT 74A-1
CHLORINE BUILDING
ROOF PENETRATION DETAILS 2 OF 2

WBS NO.	S-000900-109-4
DRAWING SCALE	NOT TO SCALE
CITY OF HOUSTON PM	ARTHUR MORRIS, P.E.
SHEET NO. 411 OF	208

PUBLIC WORKS AND ENGINEERING ACCEPTED AND FILED 48326 CITY DRAWING NUMBER HOUSTON, TEXAS

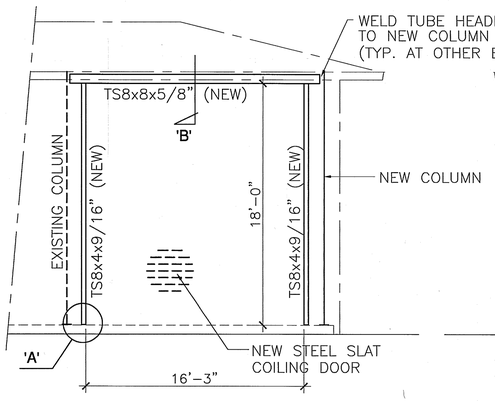

FRAMING FOR NEW COILING DOOR
SCALE 3/16" = 1'-0"

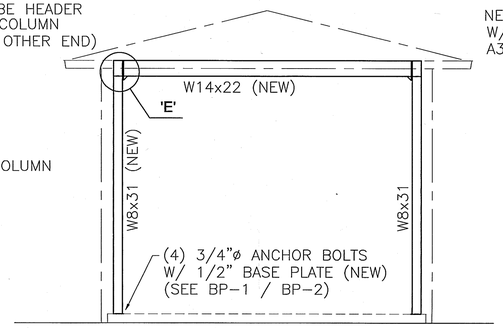

FRAME '1'
SCALE 3/16" = 1'-0"

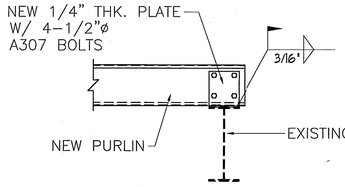

DETAIL 'F'

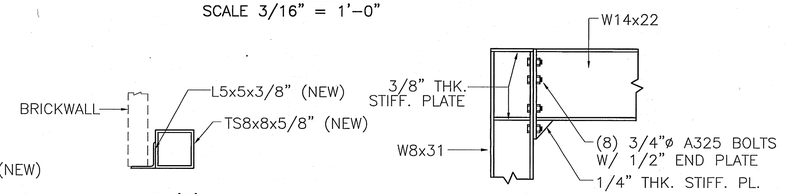

SECT. 'B'
N.T.S.

DETAIL 'E'
N.T.S.

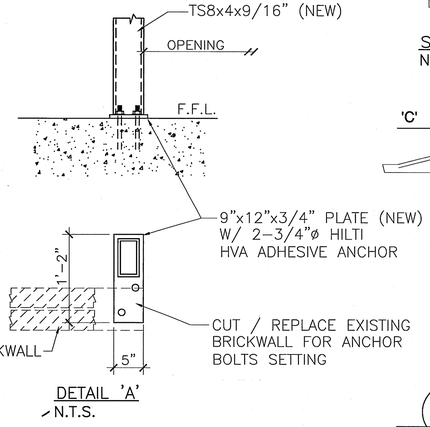

DETAIL 'A'
N.T.S.

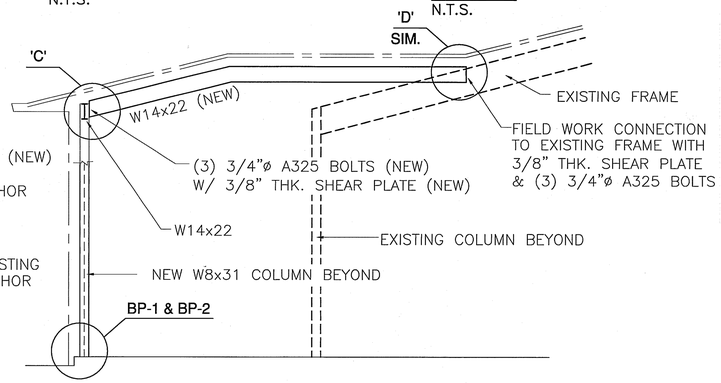

FRAME '2'
SCALE 3/16" = 1'-0"

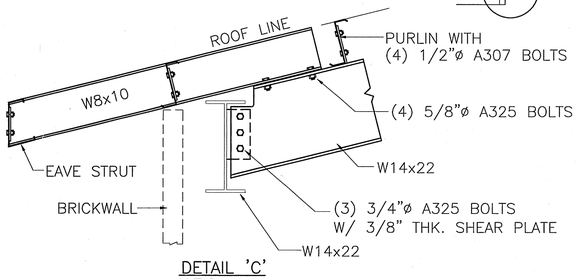

DETAIL 'C'
N.T.S.

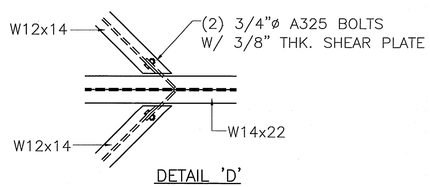

DETAIL 'D'
N.T.S.

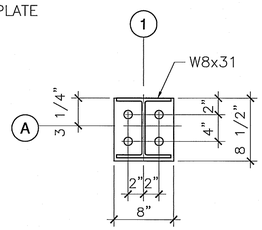

4-3/4"ø HILTI HVA ADHESIVE ANCHOR

BASE TYPE "BP-1"
N.T.S.

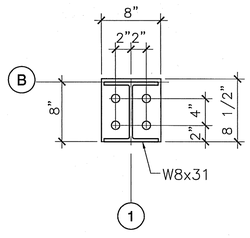

4-3/4"ø HILTI HVA ADHESIVE ANCHOR

BASE TYPE "BP-2"
N.T.S.

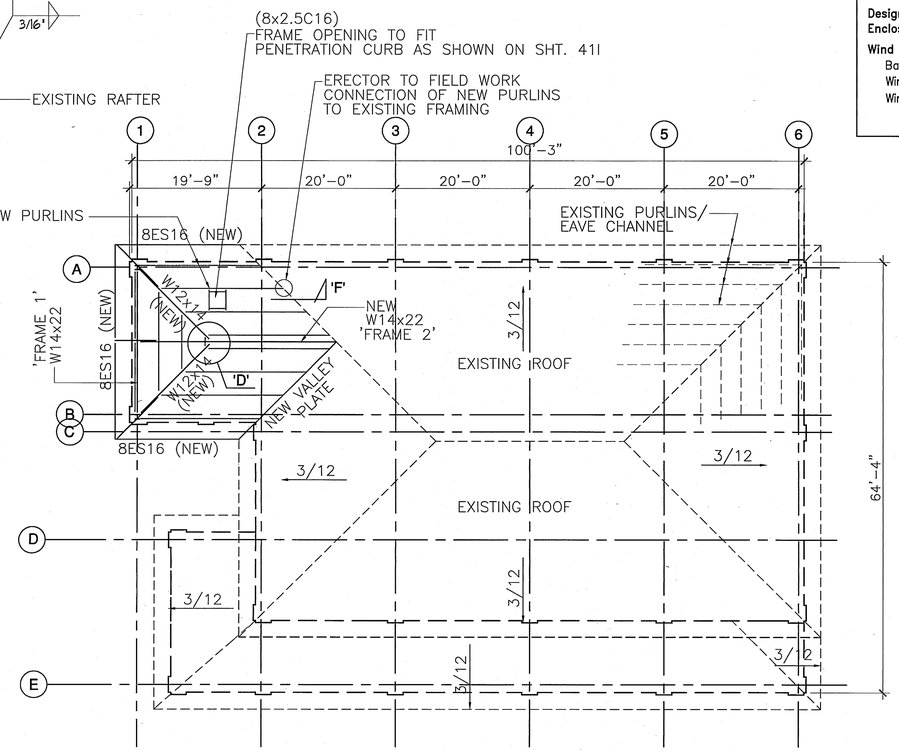

2 / 41J NEW ROOF FRAMING PLAN
SCALE 3/32" = 1'-0"

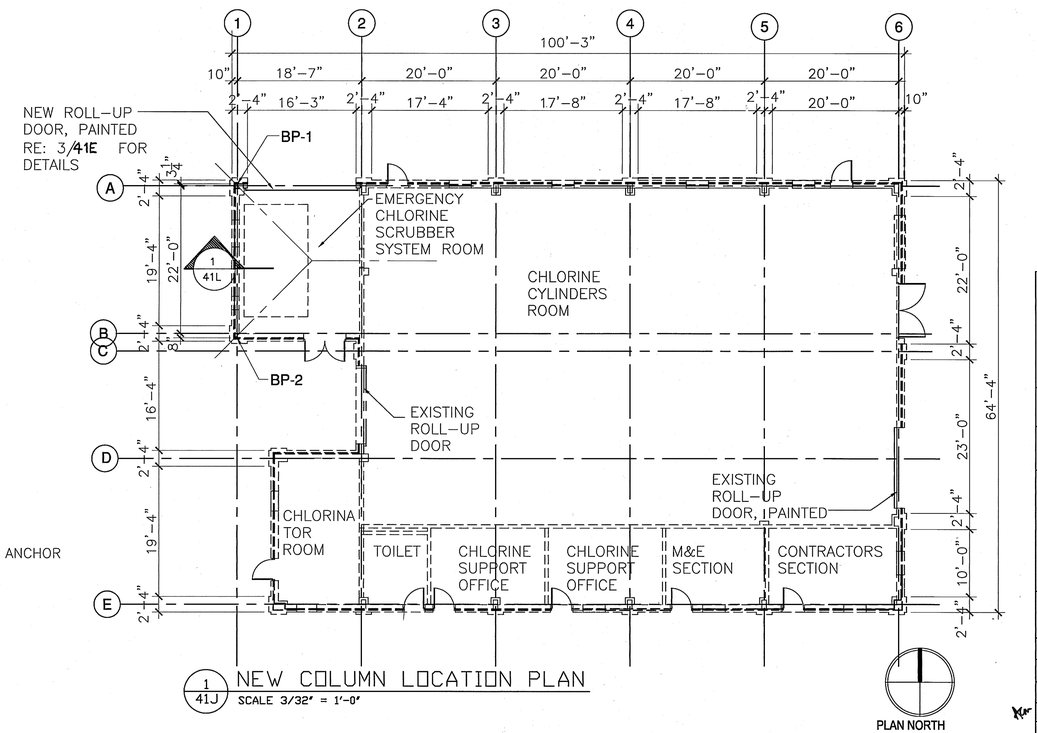

1 / 41J NEW COLUMN LOCATION PLAN
SCALE 3/32" = 1'-0"

PLAN NORTH

Design Code	: IBC 06
Enclosure	: Closed
Wind Load	
Basic Wind Speed (3 sec gust)	: 110 mph
Wind Importance Factor (Iw)	: 1.00
Wind Exposure	: C

No.	DATE	REVISIONS	APP.
1	x	x	

GENERAL NOTES:

1. NEW STANDING SEAM METAL ROOF WITH "KYNAR 500" FINISH. (TYPICAL). FOR TYPICAL ROOFING, INSULATION, GUTTER, DOWNSPOUT, SOFFIT AND FASCIA PANEL DETAILS REFER TO DRAWINGS 41F THRU 41I.
2. FOR DOWNSPOUT LOCATIONS REFER TO DRAWING 41B.
3. SUBMIT SHOP DRAWINGS OF ROOFING PANELS, STRUCTURAL DECK, DOWNSPOUTS GUTTERS, SOFFIT AND FASCIA PANELS AND STRUCTURAL STEEL FOR REVIEW AND APPROVAL.

DEMO NOTES:

1. ALL EXISTING ROOFS, INCLUDING INSTALLATION, UNDERLAYMENT, GUTTER AND DOWNSPOUTS, SOFFIT AND FASCIA SHALL BE DEMOLISHED AND REMOVED FROM JOBSITE AND SHALL BE DUMPED IN A LEGAL DUMPING SITE.
2. EXISTING STEEL STRUCTURE INCLUDING MAIN FRAMES, PURLINS, GIRTS ETC., SHALL REMAIN IN PLACE AND WITHOUT DAMAGE. SHOULD THERE BE ANY DAMAGES INCURRED TO STEEL STRUCTURE OR OTHER PARTS OF THE BUILDING BECAUSE OF ROOF DEMOLITION, THE DAMAGED PARTS SHALL BE REPAIRED TO ITS ORIGINAL CONDITION.

SWTP
Surface Water Transmission Program

Lockwood, Andrews & Newnam, Inc.
A LEO A DALY COMPANY
2925 Briarpark Drive Houston, TX 77042



FIRM NAME:
RIGID BUILDING SYSTEMS, LTD.
REGISTRATION NO.: F-3117

CITY OF HOUSTON

DEPARTMENT OF PUBLIC WORKS AND ENGINEERING

SWTP CONTRACT 74A-1

CHLORINE BUILDING

FRAMING PLANS AND DETAILS

WBS NO. S-000900-109-4	
DRAWING SCALE	
CITY OF HOUSTON PM	
ARTHUR MORRIS, P.E.	
SHEET NO. 41J OF 208	

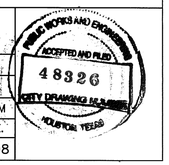

NOTE:
FOR ROOF PENETRATION REFER TO DETAILS ON DWGS. 41H AND 41I

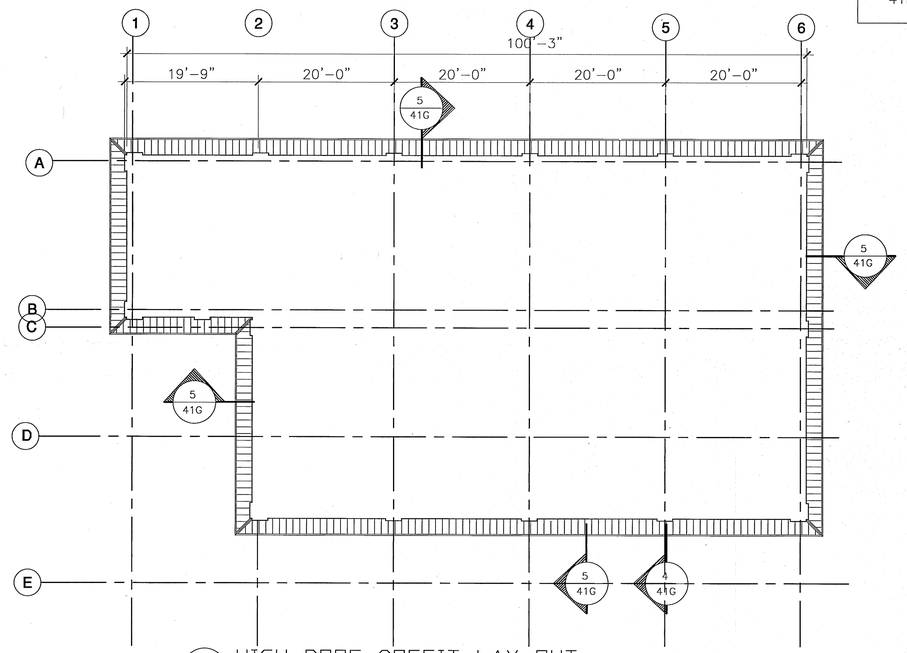

4/41K HIGH ROOF SOFFIT LAY-OUT
SCALE 3/32" = 1'-0"

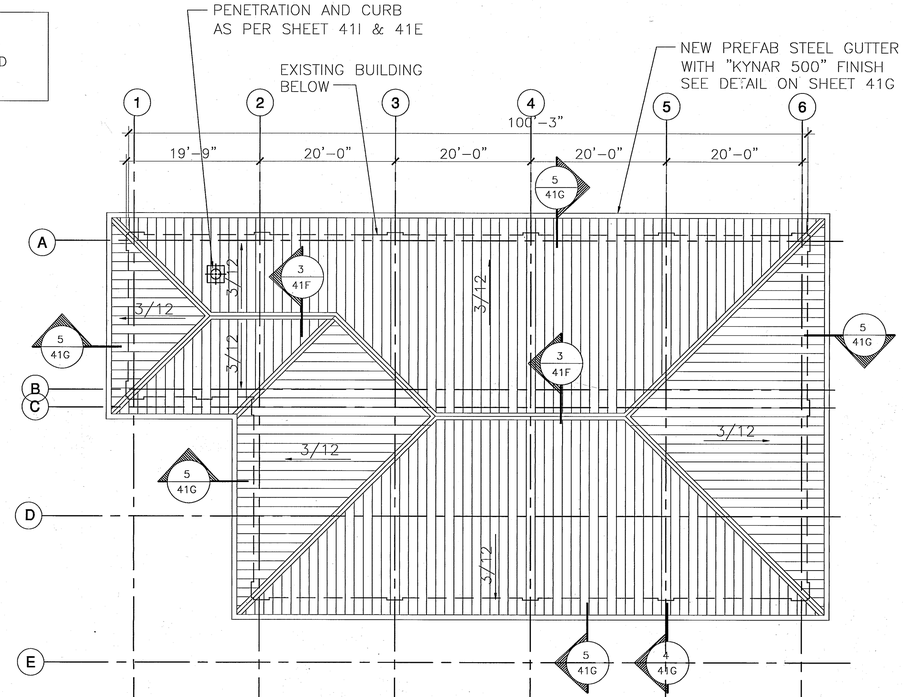

2/41K HIGH ROOF SHEETING LAY-OUT
SCALE 3/32" = 1'-0"

NOTE:
USE 20Ga. 1.5 B STRUCTURAL DECK FASTEN TO EXISTING PURLINS W/ #12-24 SCREWS @ 12" O.C.
(REFER TO SHT. 41F THROUGH 41I)

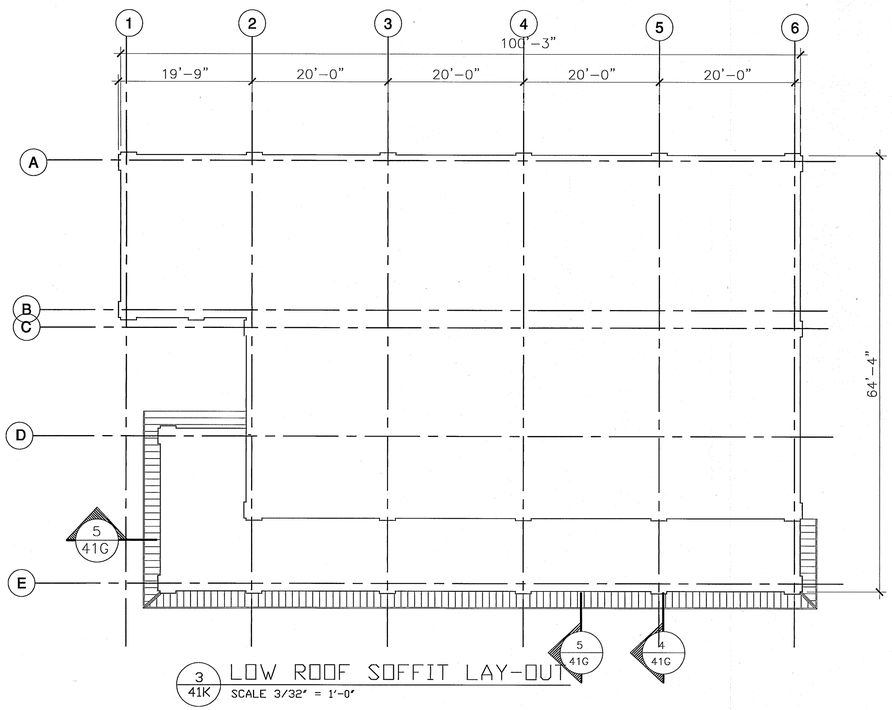

3/41K LOW ROOF SOFFIT LAY-OUT
SCALE 3/32" = 1'-0"

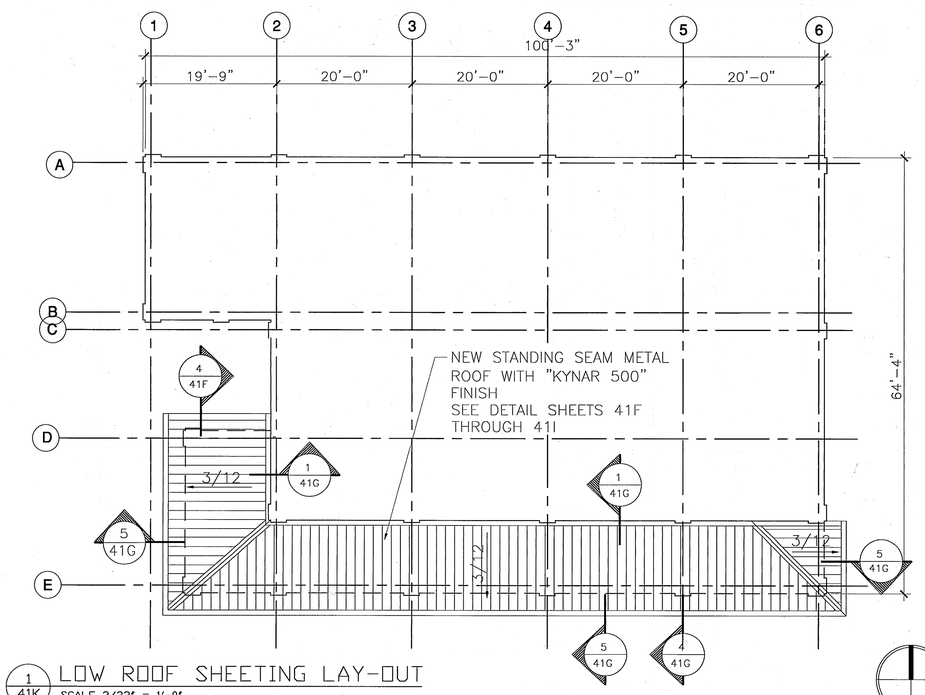

1/41K LOW ROOF SHEETING LAY-OUT
SCALE 3/32" = 1'-0"

PLAN NORTH

No.	DATE	REVISIONS	APP.
1	X	X	

SWTP
Surface Water Transmission Program

Lockwood, Andrews & Newnam, Inc.
A LEO A DALY COMPANY
2925 Briarpark Drive Houston, TX 77042

ALIREZA GHODSI
85158
LICENSED PROFESSIONAL ENGINEER
08-11

FIRM NAME: RIGID BUILDING SYSTEMS, LTD.
REGISTRATION NO.: F-3117

CITY OF HOUSTON
DEPARTMENT OF PUBLIC WORKS AND ENGINEERING

SWTP CONTRACT 74A-1

CHLORINE BUILDING

ROOF SHEETING AND SOFFIT LAY-OUT

WBS NO. S-000900-109-4

DRAWING SCALE

CITY OF HOUSTON PM
ARTHUR MORRIS, P.E.

SHEET NO. 41K OF 208

PUBLIC WORKS AND ENGINEERING
ACCEPTED AND FILED
48326
KEY DRAWING NUMBER
HOUSTON, TEXAS

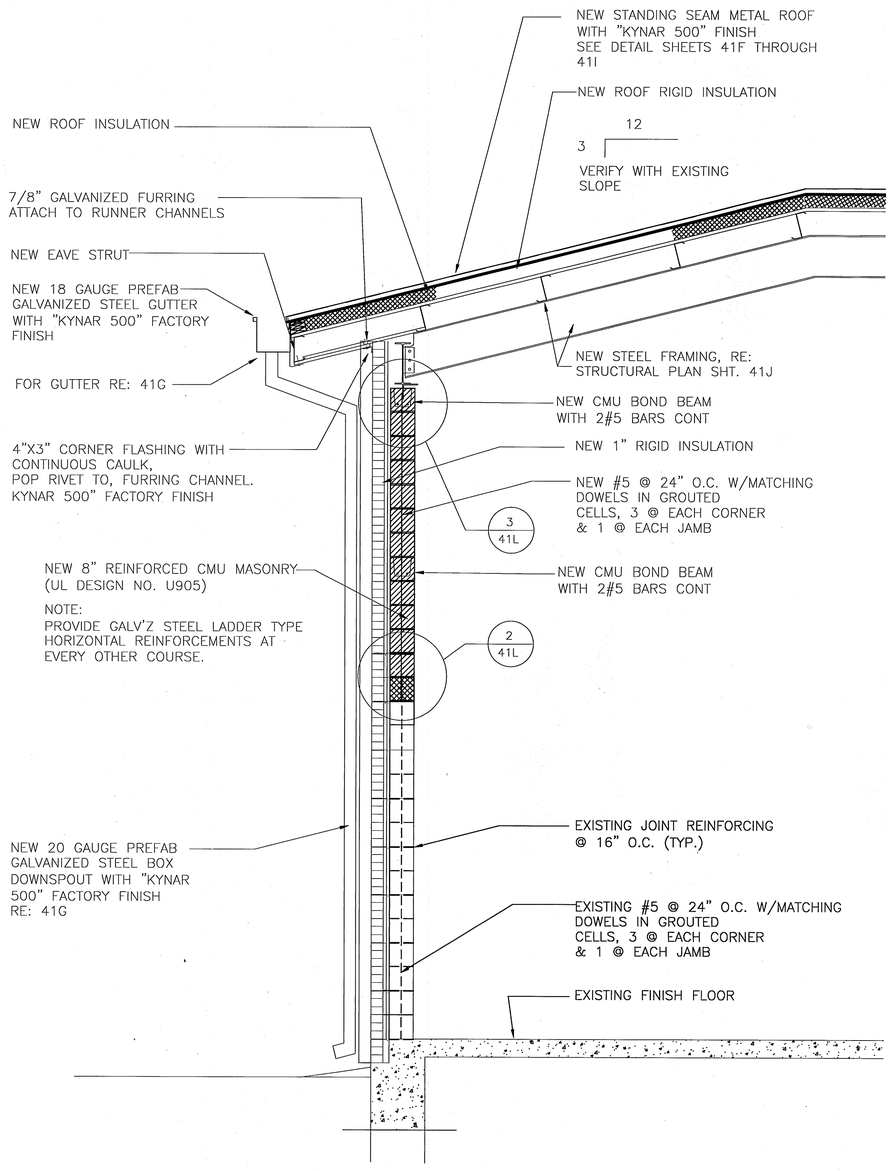

1 41L BUILDING SECTION
SCALE 1/2" = 1'-0"

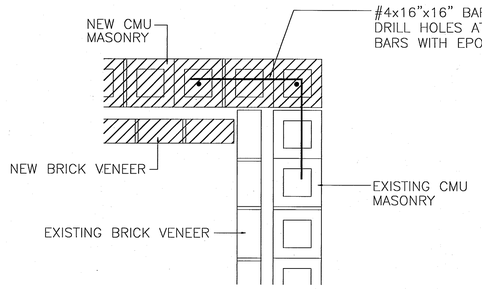

4 41L DETAIL AT INNER CORNER WALL
SCALE 1" = 1'-0"

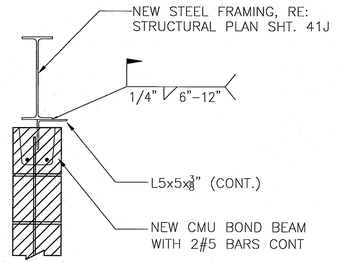

3 41L DETAIL
SCALE 1" = 1'-0"

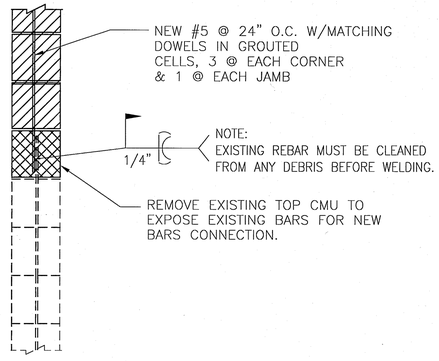

2 41L DETAIL
SCALE 1" = 1'-0"

No.	DATE	REVISIONS	APP.
1	x	x	

SWTP
Surface Water Transmission Program

Lockwood, Andrews & Newnam, Inc.
A LEO A DALY COMPANY
2925 Briarpark Drive Houston, TX 77042

STATE OF TEXAS
ALIREZA GHODSI
55193
LICENSED
PROFESSIONAL ENGINEER
3-08-11

FIRM NAME: RIGID BUILDING SYSTEMS, LTD.
REGISTRATION NO: F-3117

CITY OF HOUSTON
DEPARTMENT OF PUBLIC WORKS AND ENGINEERING

SWTP CONTRACT 74A-1

CHLORINE BUILDING

MASONRY WALL DETAILS

WBS NO. S-000900-109-4

DRAWING SCALE

CITY OF HOUSTON PM
ARTHUR MORRIS, P.E.

SHEET NO. 41L OF 208

ACCEPTED AND FILED
48326
CITY OF HOUSTON, TEXAS

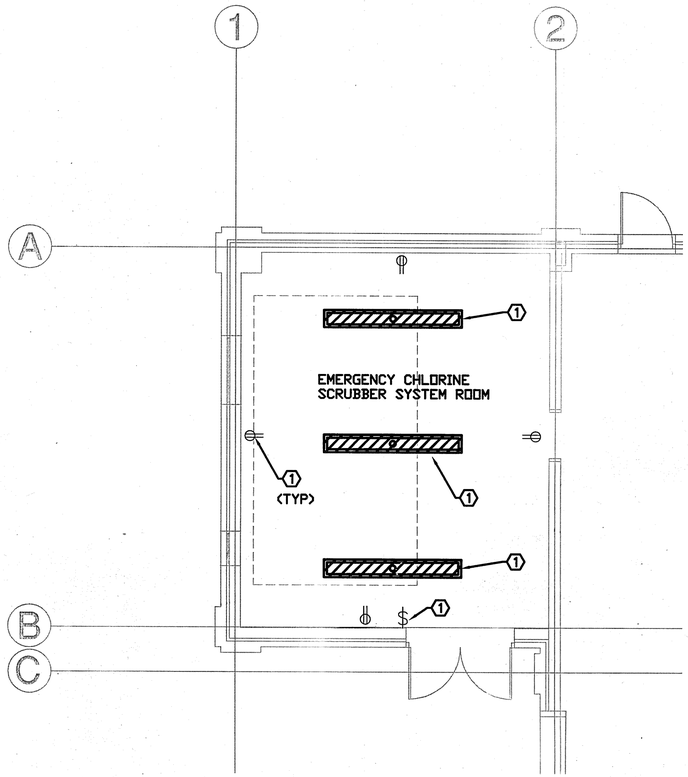

1 DEMOLITION PLAN – ELECTRICAL
SCALE 1/4" = 1'-0"

SYMBOL LEGEND

- TYPE "A" FIXTURE
- TYPE "A1" EMERGENGY FIXTURE
- EXISTING FIXTURE TO BE REMOVED
- 120V DUPLEX RECEPTACLE
- $ SINGLE POLE SWITCH
- MOTOR
- DISCONNECT SWITCH
- HOMERUN ELECTRICAL CIRCUIT W/ HOT, GROUND AND NEUTRAL WIRE

GENERAL NOTES

1. REMOVE ALL ELECTRICAL EQUIPMENT, LIGHTING FIXTURES, ASSOCIATED FIXTURES, BOXES, CONDUIT AND WIRES.
2. COORDINATE UTILITY SERVICE OUTAGE WITH CITY TO PROVIDE CONTINUOS SERVICE TO OPERATING EQUIPMENT
3. DISCONNECT ELECTRICAL SYSTEM IN WALLS, FLOORS AND CEILINGS SCHEDULED FOR REMOVAL
4. REMOVE AND PROPERLY DISPOSE ABANDONED CONDUIT AND WIRE

KEYED NOTES

(1) EXISTING TO BE REMOVED

NOTE:
SCOPE OF THIS PROJECT DOES NOT INCLUDE ANY ADDITION OR CHANGES IN THE BUILDING AREA AND IN THE NATURE OF THE BUILDING AND IT DOES NOT EFFECT ANY REQUIREMENTS OF EXISTING "H" OCCUPANCIES.

PLAN NORTH

No.	Date	Revisions	App.

SWTP
Surface Water Transmission Program

Lockwood, Andre & Newnam, Inc.
A LEO A DALY COMPANY
2925 Briarpark Drive Houston, TX 77042

SURVEYED BY:
NA

CARL ANDREW KLEIN 97906 LICENSED PROFESSIONAL ENGINEER 9/15/11
Lockwood, Andrews & Newnam, Inc.
ID # 2614

CITY OF HOUSTON
DEPARTMENT OF PUBLIC WORKS AND ENGINEERING

SWTP CONTRACT 74A-1

CHLORINE BUILDING
ELECTRICAL SYMBOL LEGEND AND
DEMOLITION PLAN - ELECTRICAL

WBS NO.	S-000900-0109-4
DRAWING SCALE	1/4" = 1'-0"
CITY OF HOUSTON PM	
ARTHUR C. MORRIS, P.E.	
SHEET NO. 41M OF 91	

PUBLIC WORKS AND ENGINEERING ACCEPTED AND FILED 48326 CITY DRAWING FILE HOUSTON, TEXAS

File:L:\110059\120-10290-000\Prod\Contract 70A-2\5-0 Production\5-01 Drawings\Southwest Pump Station - Roof Modifications\Elec\DEMOLITION.dwg Plotted: 9/15/2011 10:35 AM By:Meeks, Kenneth

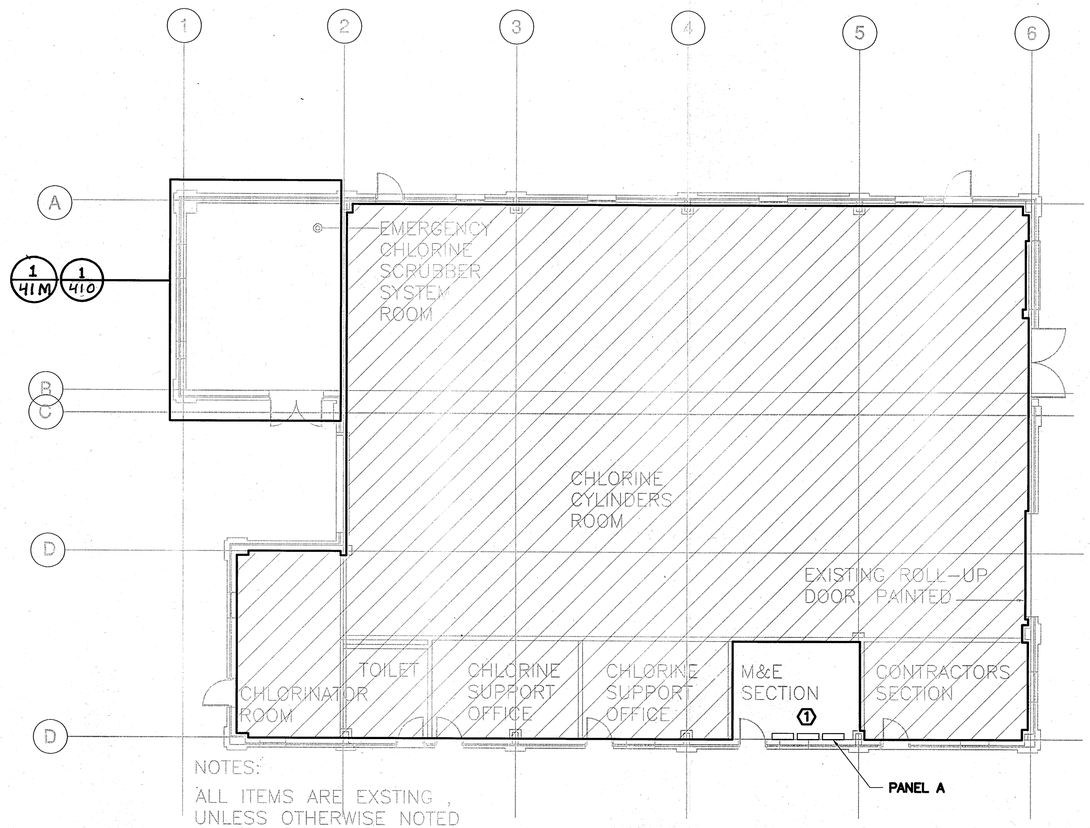

1 OVERALL PLAN—ELECTRICAL
SCALE 1/8" = 1'-0"

KEYED NOTES

1 ALL EXISTING ELECTRICAL EQUIPMENT THIS ROOM TO REMAIN.

No.	Date	Revisions

NOTE:
SCOPE OF THIS PROJECT DOES NOT INCLUDE ANY ADDITION OR CHANGES IN THE BUILDING AREA AND IN THE NATURE OF THE BUILDING AND IT DOES NOT EFFECT ANY REQUIREMENTS OF EXISTING "H" OCCUPANCIES.

PLAN NORTH

SWTP
Surface Water Transmission Program

Lockwood, Andre & Newnam, Inc.
A LEO A DALY COMPANY
2925 Briarpark Drive Houston, TX 77042

SURVEYED BY:
NA

CARL ANDREW KLEIN
97906
LICENSED
PROFESSIONAL
ENGINEER
7/5/11
Lockwood, Andrews & Newnam, Inc
ID # 2614

CITY OF HOUSTON
DEPARTMENT OF PUBLIC WORKS AND ENGINEERING

SWTP CONTRACT 74A-1

CHLORINE BUILDING
OVERALL PLAN-ELECTRICAL

WBS NO. S-000900-0109-4	
DRAWING SCALE	
AS NOTED	
CITY OF HOUSTON PM	
ARTHUR C. MORRIS, P.E.	
SHEET NO. 41N OF 91	

PUBLIC WORKS AND ENGINEERING
ACCEPTED AND FILED
48326
CITY DRAWING NUMBER
HOUSTON, TEXAS

File:L:\110059\120-10290-000\Prod\Contract 70A-2\5-0 Production\5-01 Drawings\Southwest Pump Station - Roof Modifications\Elec\OVERALL.dwg Plotted:4/15/2011 10:34 AM By:Meeks, Kenneth

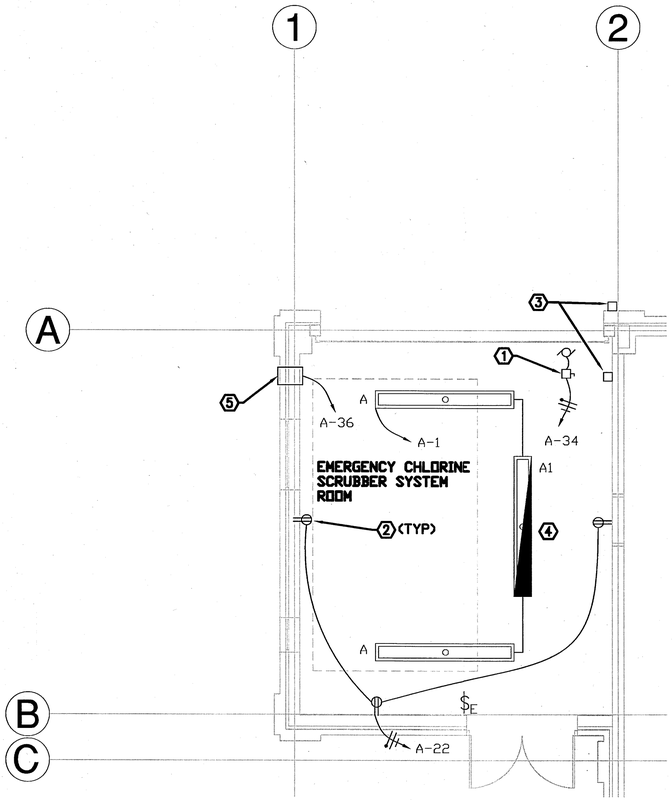

1 POWER & LIGHTING PLAN
SCALE 1/4" = 1'-0"

EXISTING PANEL. A — LOCATION Electrical Room
SERVICE VOLTAGE 208Y/120V,3PH,4W — PHASE BUS RATING 225 AMPS — MOUNTING SURFACE
MAIN BREAKER SIZE 125 AMP MCB — NEUTRAL BUS RATING 225 AMPS — DRAWING NO. 182
SHORT CIRCUIT RATING 10000 AIC

CIRCUIT C	P	N	G	DESCRIPTION	LOAD AMP	BREAKER POLE	BREAKER AMP	VOLT AMPS A	B	C	CKT. NO.	CKT. NO.	VOLT AMPS A	B	C	BREAKER POLE	BREAKER AMP	LOAD AMP	DESCRIPTION	CIRCUIT C	P	N	G
3/4"	#12	#12	#12	SCRUBBER RM LTG	2.5	1	20	300.00			1	2	480.00			1	20	4.0	CHLR STORAGE LTG	3/4"	#12	#12	#12
3/4"	#12	#12	#12	OFFICE LTG	4.0	1	20		480.00		3	4		960.00		1	20	8.0	CHLR STORAGE LTG	3/4"	#12	#12	#12
3/4"	#12	#12	#12	OFFICE LTG	4.0	1	20			480.00	5	6			720.00	1	20	6.0	OFFICE LTG	3/4"	#12	#12	#12
3/4"	#12	#12	#12	MECH & ELEC RM LTG	1.3	1	20	160.00			7	8	640.00			1	20	5.3	OFFICE RECEPT	3/4"	#12	#12	#12
3/4"	#12	#12	#12	OFFICE RECEPT	4.5	1	20		540.00		9	10		360.00		1	20	3.0	OFFICE RECEPT	3/4"	#12	#12	#12
3/4"	#12	#12	#12	OFFICE RECEPT	4.5	1	20			540.00	11	12			540.00	1	20	4.5	OFFICE RECEPT	3/4"	#12	#12	#12
3/4"	#12	#12	#12	OFFICE RECEPT	4.5	1	20	540.00			13	14	720.00			1	20	6.0	ELEC ROOM RECEPT	3/4"	#12	#12	#12
3/4"	#12	#12	#12	OFFICE AREA RECEPT	4.5	1	20		540.00		15	16		360.00		1	20	3.0	OFFICE AREA RECEPT	3/4"	#12	#12	#12
3/4"	#12	#12	#12	LCP-B	0.8	1	20			100.00	17	18			540.00	1	20	4.5	STRG AREA RECEPT	3/4"	#12	#12	#12
3/4"	#12	#12	#12	STRG AREA RECEPT	3.0	1	20	360.00			19	20	540.00			1	20	4.5	STRG AREA RECEPT	3/4"	#12	#12	#12
3/4"	#12	#12	#12	STRG AREA RECEPT	3.0	1	20		360.00		21	22		540.00		1	20	4.5	STRG AREA RECEPT	3/4"	#12	#12	#12
3/4"	#12		#12	PARK LTG	2.2	2	20			230.00	23	24			1000.00	1	20	8.3	WATER HEATER-1	3/4"	#12	#12	#12
								230.00			25	26	000.00			1	20	8.3	WATER HEATER	3/4"	#12	#12	#12
3/4"	#12	#12	#12	CLORINATORS #1,2,3	4.2	1	20		500.00		27	28		1000.00		1	20	8.3	PLC	3/4"	#12	#12	#12
3/4"	#12	#12	#12	CLORINATORS #4,5,6,7	5.8	1	20			700.00	29	30			400.00	1	20	3.3	CHLR SCALE #2	3/4"	#12	#12	#12
3/4"	#12	#12	#12	DRINK FOUNTAIN	3.0	1	20	360.00			31	32	400.00			1	20	3.3	CHLR SCALE #4	3/4"	#12	#12	#12
3/4"	#12	#12	#12	AE-4001	7.5	1	20		900.00		33	34		1000.00		1	20	8.3	ROLL UP DOOR	3/4"	#12	#12	#12
3/4"	#12	#12	#12	CHLR SHUTOFF VALVES	8.0	1	20			960.00	35	36			300.00	1	20	2.5	EF10-EXH FAN & LTG	3/4"	#12	#12	#12
3/4"	#12	#12	#12	FACP PANEL	1.7	1	20	200.00			37	38	200.00			1	20	10.0	MCC6 SPACE HTR	3/4"	#12	#12	#12
3/4"	#12	#12	#12	AT-1013	3.3	1	20		400.00		39	40		1000.00		1	20	8.3	OUT LTG	3/4"	#12	#12	#12
3/4"	#12	#12	#12	BOOSTER PNL	8.3	1	20			1000.00	41	42			1000.00	1	20	8.3	EF5 & 9	3/4"	#12	#12	#12

TOTAL PHASE A: 7130 VOLT-AMPS
TOTAL PHASE B: 8940 VOLT-AMPS
TOTAL PHASE C: 8510 VOLT-AMPS
MAXIMUM PHASE CURRENT: 74.4 AMPS
TOTAL CONNECTED LOAD: 24.6 KVA
ESTIMATED DEMAND LOAD: 26.5 KVA
ESTIMATED DEMAND LOAD: 73.5 AMPS

• ELECTRICAL CONTRACTOR TO PROVIDE NEW CIRCUIT ON EXISTING PANEL

LOAD ANALYSIS PER NEC 220.35		
12 MONTH PEAK DEMAND = 3446000 VA @ 4.16 KV 3ph		
12 MONTH PEAK DEMAND @ 125%	4307500	VA
REMOVED LOAD	-960	VA
NEW LOAD	1840	VA
TOTAL	4308380	VA
	599	A

EXISTING SERVICE SIZE OF 1200A @ 4.16KV 3ph TO REMAIN UNCHANGED

KEYED NOTES

1. ELECTRICAL CONTRACTOR TO PROVIDE 120V, SINGLE POLE DISCONNECT SWITCH FOR OWNER PROVIDED ROLL UP DOOR. FIELD VERIFY EXACT LOCATION AND REQUIREMENT.
2. 20 AMP, 120VAC, SPECIFICATION GRADE DUPLEX RECEPTACLE HUBBLE #53521, IVORY COLOR INSTALLED IN A PVC COATED FD BOX 3/4" HUB, OCAL # FDC2 WITH SELF CLOSING COVER – CLEAR POLYCARBONATE, VERTICAL 4 SCREW MOUNTED, P&S #3710-FS OR APPROVED SUBSTITUTION.
3. ROLL UP DOOR PUSH BUTTON STATION
4. WIRE EMERGENCY BALLAST AHEAD OF LOCAL SWITCH, SO THAT POWER TO EMERGENCY BALLAST IS NOT INTERRUPTED.
5. RELOCATE EXHAUST FAN, REMOVE & REPLACE WIRE BACK TO PANEL

LIGHTING FIXTURE SCHEDULE							INPUT
TYPE	MANUFACTURER	CATALOG NUMBER	DESCRIPTION	VOLTS	LAMPS	MOUNTING	WATTAGE
A	DAYBRITE	VW259120-1/2EB	1' x 8' FLUORESCENT PENDANT MOUNT, 120VAC, ELECTRONIC BALLAST, COMPRESSIBLE CLOSED CELL GASKET, HIGH IMPACT, ACRYLIC DIFFUSER, MOLDED FIBERGLASS REINFORCED POLSTER BODY, TWO TOP AND WATER TITE HUBS, ENCLOSURE SECURED TO BODY BY STAINLESS STEEL LATCHES	120	59-50WTB (2 LAMPS)	PENDANT	50W
A1	DAYBRITE	VW259120-1/2EB-EMB50	1' x 8' FLUORESCENT PENDANT MOUNT, 120VAC, BODIINE B50 SELF CONTAINED FLUORESCENT EMERGENCY BALLAST WITH MAINTANANCE FREE (NICKEL CADIUM) BATTERIES AND CHARGER, 90 MINUTES BACKUP, CHARGER INDICATOR LIGHT AND TEST SWITCH TO MONITOR THE CHARGER AND BATTERY.	120	59-50WTB (2 LAMPS)	PENDANT	50W

PLAN NORTH

NOTE:
SCOPE OF THIS PROJECT DOES NOT INCLUDE ANY ADDITION OR CHANGES IN THE BUILDING AREA AND IN THE NATURE OF THE BUILDING AND IT DOES NOT EFFECT ANY REQUIREMENTS OF EXISTING "H" OCCUPANCIES.

SWTP
Surface Water Transmission Program

Lockwood, Andre & Newnam, Inc.
A LEO A DALY COMPANY
2925 Briarpark Drive Houston, TX 77042
SURVEYED BY: NA

CARL ANDREW KLEIN 97906 LICENSED PROFESSIONAL ENGINEER
Lockwood, Andrews & Newnam, Inc ID # 2614

CITY OF HOUSTON
DEPARTMENT OF PUBLIC WORKS AND ENGINEERING

SWTP CONTRACT 74A-1

CHLORINE BUILDING
POWER & LIGHTING PLAN

WBS NO. S-000900-0109-4
DRAWING SCALE AS NOTED
CITY OF HOUSTON PM ARTHUR C. MORRIS, P.E.
SHEET NO. 41.0 OF 91

ACCEPTED AND FILED 48326 PUBLIC WORKS AND ENGINEERING HOUSTON, TEXAS

No.	Date	Revisions	App.

File:L:\110059\120-10290-000\Prod\Contract 70A-2\5-0 Production\5-01 Drawings\Southwest Pump Station - Roof Modifications\Elec\POWER.dwg Plotted:7/8/2011 10:50 AM By:Meeks, Kenneth

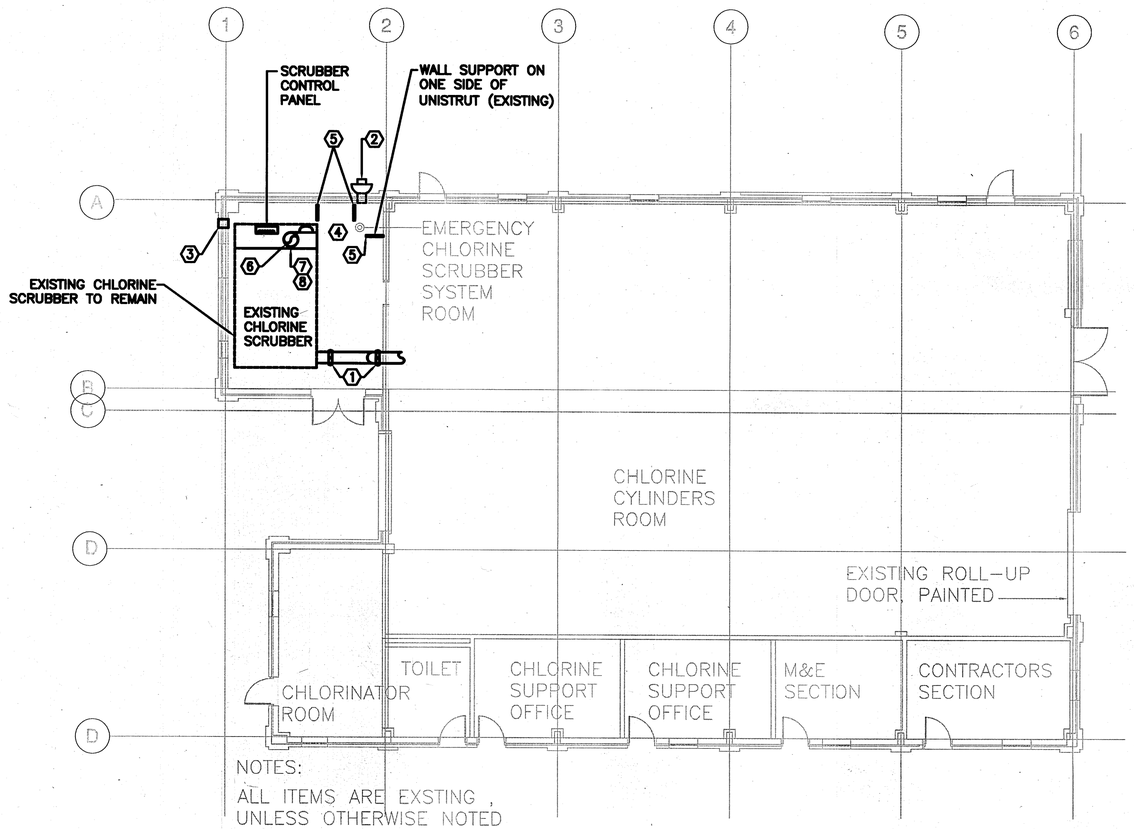

1 OVERALL PLAN – MECHANICAL
SCALE 1/8" = 1'-0"

KEYED NOTES

1. PROVIDE TEMPORARY SUPPORT FOR INLET SCRUBBER FROM FLOOR OR WALL FOR INLET SCRUBBER DUCT. CONNECT SUPPORTS TO NEW ROOF ONCE IT IS INSTALLED.
2. REMOVE EXISTING EF AND WALL LOUVER FOR RE-INSTALLING IN NEW WEST WALL.
3. RELOCATE EXHAUST FAN FROM KEY NOTE 2 TO NEW WEST WALL. RE-USE EXISTING WALL LOUVER IN NEW WALL. RECONNECT EXISTING CONDUIT.
4. RECONNECT EF TO EXISTING POWER CIRCUIT. KEY NOTE 4 INDICATES APPROXIMATE LOCATION OF ROOF INSTALLATION. IF CHOSEN AS AN OPTION.
5. PROVIDE TEMPORARY SUPPORT OF SCRUBBER CONTROL CONDUITS FROM FLOOR OR WALLS DURING EXISTING ROOF REMOVAL AND NEW ROOF INSTALL. 6 TOTAL CONDUITS RACKED ON UNISTRUT. CONNECT SUPPORT TO NEW ROOF.
6. DISCONNECT SCRUBBER DISCHARGE DUCT AT FLEX CONNECTION. REMOVE DISCHARGE DUCT UP TO ROOF FOR RE-USE WITH NEW ROOF. REMOVE DISCHARGE DUCT ABOVE ROOF AND CAP FOR RE-USE WITH NEW ROOF. SEE ROOF DRAWING.
7. INSTALL NEW PVC DUCT EXTRUDED ROUND EQUIVALENT TO HARVEL PLASTICS INC. H707 PVC AVERAGE WALL THICKNESS 0.187", MATCH DISCHARGE DIAMETER AT SCRUBBER FLEX CONNECTION (24" DIAMETER). CUT DUCT TO LENGTH TO CONNECT TO EXISTING DISCHARGE DUCT UP TO ROOF, APPROXIMATLEY 12' CONNECT NEW PIPE WITH NEW FLEX CONNECTION TO ROOF CONNECTION DISHCHARGE DUCT. AT CONTRACTORS OPTION PVC COATED GALVANIZED DUCT EQUIVALENT TO EASTERN SHEET METAL: PCS ROUND DUCT FOR CHEMICAL EXHAUST ABOVE GROUND 2005 SMACNA 2" WG SPIRAL WITH PVC COATING ON BOTH SIDES OF THE METAL DUCT, SHEET METAL WALL THICKNESS 0.0186"-0.0250" OR 26-24 SHEET METAL GAUGE, AVERAGE WALL THICKNESS , MAY BE USED IN PLACE OF PVC PIPE.
8. PROVIDE 18" PVC FLEX DUCT SIMILAR TO AIRPORT RAMP TYPE FLEXT DUCT AT DISCHARGE OF SCRUBBER TO ALLOW IT TO REMAIN OPERATIONAL DURING CONSTRUCTION. DUCT SHALL BE EQUIVALENT TO NOVAFLEX: U-LOK 101 PART NUMBER 3UL101X PVC COATED DUCT. MINIMUM LENGTH OF 50' SHALL BE STRUNG ON GROUND TO DISCHARGE AWAY FROM CONSTRUCTION WORK CREWS AT GROUND LEVEL DURING CONSTRUCTION. TAPE OFF DISCHARGE AREA OF DUCT TO PREVENT ANYONE FROM WALKING INTO DISCHARGE AREA.

PLAN NORTH

NOTE:
SCOPE OF THIS PROJECT DOES NOT INCLUDE ANY ADDITION OR CHANGES IN THE BUILDING AREA AND IN THE NATURE OF THE BUILDING AND IT DOES NOT EFFECT ANY REQUIREMENTS OF EXISTING "H" OCCUPANCIES.

SWTP
Surface Water Transmission Program

Lockwood, Andre & Newnam, Inc.
A LEO A DALY COMPANY
2925 Briarpark Drive Houston, TX 77042
SURVEYED BY:
NA

STATE OF TEXAS
DONALD [illegible] ROS III
85
LICENSED
PROFESSIONAL ENGINEER
5/24/11

Lockwood, Andrews & Newnam, Inc.
Texas Registered Engineering Firm
F-2614

CITY OF HOUSTON
DEPARTMENT OF PUBLIC WORKS AND ENGINEERING

SWTP CONTRACT 74A-1

CHLORINE BUILDING
OVERALL PLAN - MECHANICAL

WBS NO.	S-000900-0109-4
DRAWING SCALE	1/8" = 1'-0"
CITY OF HOUSTON PM	ARTHUR C. MORRIS, P.E.
SHEET NO.	41P OF 91

ACCEPTED AND FILED
48326
HOUSTON TEXAS

No.	Date	Revisions

File:L:\110059\120-10290-000\Prod\Contract 74A-2\5-0 Production\5-01 Drawings\Southwest Pump Station - Roof Modifications\Mech\M1.1.dwg Plotted:4/26/2011 3:52 PM By:Meeks, Kenneth

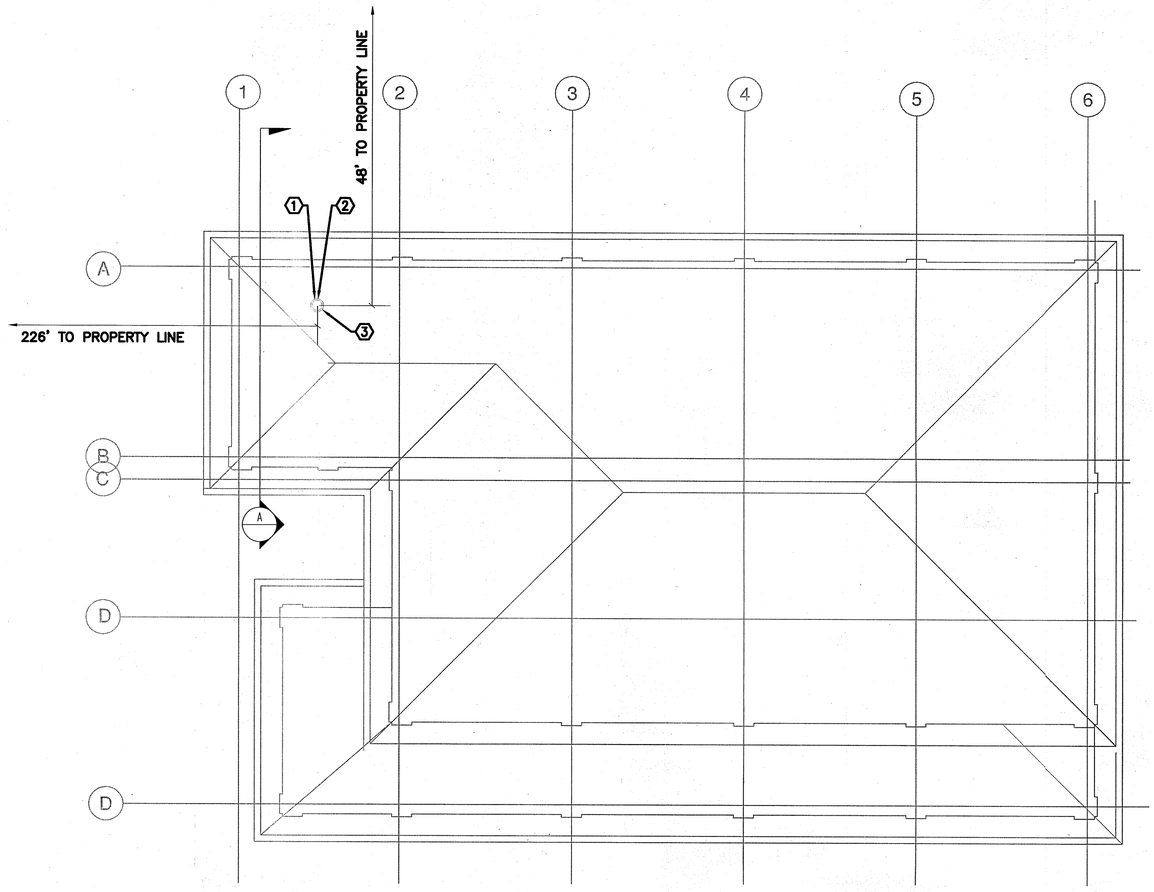

1 ROOF PLAN - MECHANICAL
SCALE 1/8" = 1'-0"

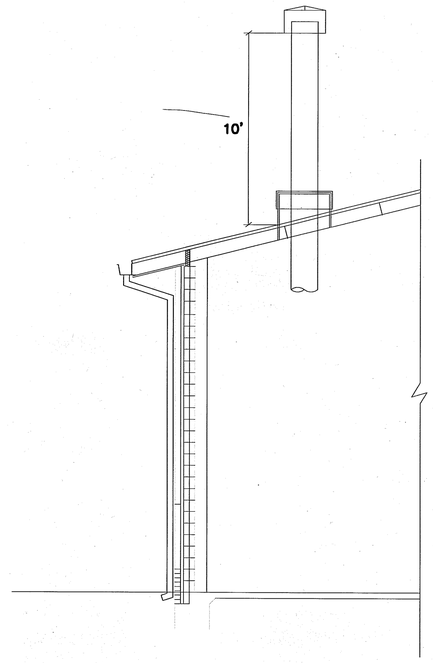

A ROOF SECTION
SCALE: NTS

KEYED NOTES:

1. REMOVE FOR RE-INSTALL EXISTING SCRUBBER DISCHARGE DUCT AND CAP. SCRUBBER DISCHARGE TO TERMINATE A MINIMUM OF 8'-0" ABOVE ROOF LINE.
2. RE-INSTALL EXISTING SCRUBBER AND DISCHARGE DUCT. PROVIDE NEW ROOF CURB AND FLASHING FOR NEW ROOF. SQUARE PITCHED CURB WITH TOP TO ACCEPT ROUND DUCT FLASHING AND STORM COLLAR TO EXISTING.
3. SUPPORT DISCHARGE DUCT FROM ROOF.

NOTE:
SCOPE OF THIS PROJECT DOES NOT INCLUDE ANY ADDITION OR CHANGES IN THE BUILDING AREA AND IN THE NATURE OF THE BUILDING AND IT DOES NOT EFFECT ANY REQUIREMENTS OF EXISTING "H" OCCUPANCIES.

PLAN NORTH

No. Date Revisions App.

SWTP
Surface Water Transmission Program

Lockwood, Andre & Newnam, Inc.
A LEO A DALY COMPANY
2925 Briarpark Drive, Houston, TX 77042

SURVEYED BY:
NA

STATE OF TEXAS
RONALD L. RICHARDS
61525
LICENSED PROFESSIONAL ENGINEER
4-15-11
Lockwood, Andrew & Newnam, Inc.
Texas Registered Engineering Firm
F-2614

CITY OF HOUSTON
DEPARTMENT OF PUBLIC WORKS AND ENGINEERING

SWTP CONTRACT 74A-1

CHLORINE BUILDING
ROOF PLAN - MECHANICAL

WBS NO.
S-000900-0109-4

DRAWING SCALE
1/8" = 1'-0"

CITY OF HOUSTON PM
ARTHUR C. MORRIS, P.E.

SHEET NO. 41Q OF 91

ACCEPTED AND FILED
48326

File:L:\110059\120-10290-000\Prod\Contract 70A-2\5-0 Production\5-01 Drawings\Southwest Pump Station - Roof Modifications\Mech\M1.2.dwg Plotted:4/15/2011 10:34 AM By:Meeks, Kenneth

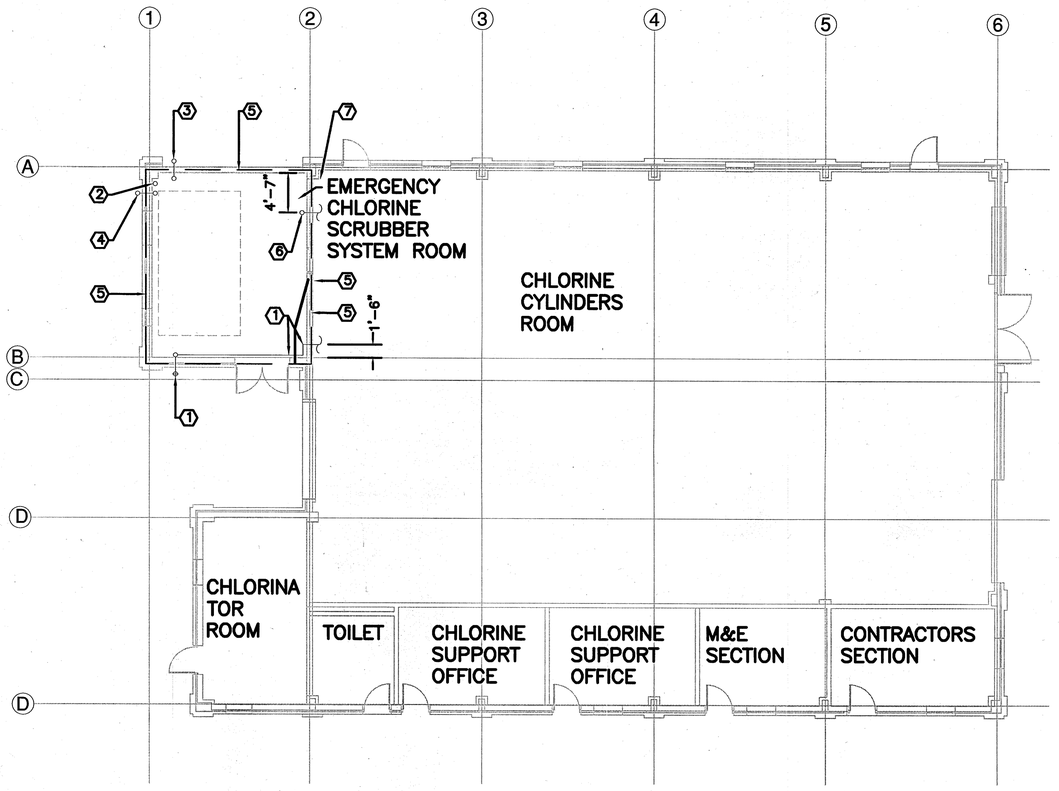

1 NEW FLOOR PLAN - PLUMBING
SCALE 1/8" = 1'-0"

KEYED NOTES

1. EXISTING EMERGENCY SHOWER AND 1 1/4" PVC SUPPLY PIPING TO REMAIN IN PLACE, PROTECT FROM DAMAGE AS NECESSARY DURING CONSTRUCTION.
2. EXTEND EXISTING 4" POLYPROPYLENE TANK VENT UP TO MIN 2'-0" ABOVE NEW ROOF. FLASH & COUNTER FLASH PER ARCHITECTURE ROOF DETAILS. SUPPORT NEW PIPING FROM WALL TYPICAL OF EXISTING. PROVIDE OPW #523 PRESSURE/VACUUM CAP.
3. EXISTING FIRE SPRINKLER SYSTEM DRAIN TO BE REMOVED.
4. PROVIDE NEW FIRE SPRINKLER SYSTEM DRAIN IN W. WALL. COORD WITH TANK VENT AND EXISTING WINDOW.
5. PROVIDE NEW WET PIPE SPRINKLER SYSTEM BELOW NEW ROOF LEVEL TO PROVIDE TOTAL COVERAGE FOR CHLORINE SCRUBBER ROOM.
6. EXISTING 2" FIRE SPRINKLER SERVICE LINE FROM CYLINDER ROOM AT ± 13' A.F.F. REMOVE ALL EXISTING FIRE SPRINKLER PIPING IN SCRUBBER ROOM BACK TO THIS POINT AND PROVIDE NEW FIRE SPRINKLER PIPING SYSTEM PER NOTE 5.
7. EXISTING FIRE SPRINKLER AND WATER PIPING WITHIN CHLORINE CYLINDER ROOM ALONG COL 2 SHALL REMAIN IN PLACE.

NOTE:
SCOPE OF THIS PROJECT DOES NOT INCLUDE ANY ADDITION OR CHANGES IN THE BUILDING AREA AND IN THE NATURE OF THE BUILDING AND IT DOES NOT EFFECT ANY REQUIREMENTS OF EXISTING "H" OCCUPANCIES.

PLAN NORTH

SWTP
Surface Water Transmission Program

Lockwood, Andre & Newnam, Inc.
A LEO A DALY COMPANY
2925 Briarpark Drive Houston, TX 77042
SURVEYED BY:
NA

STATE OF TEXAS
JONALD RICHARDS III
61525
LICENSED
PROFESSIONAL ENGINEER
Lockwood, Andrews & Newnam, Inc
Texas Registered Engineering Firm
F-2614

CITY OF HOUSTON
DEPARTMENT OF PUBLIC WORKS AND ENGINEERING

SWTP CONTRACT 74A-1

CHLORINE BUILDING
NEW FLOOR PLAN - PLUMBING

WBS NO.	S-000900-0109-4
DRAWING SCALE	1/8" = 1'-0"
CITY OF HOUSTON PM	ARTHUR C. MORRIS, P.E.
SHEET NO.	41R OF 91

ACCEPTED AND FILED
48926
CITY SUPERVISOR
HOUSTON, TEXAS

No.	Date	Revisions	App.

File:L:\110059\120-10290-000\Prod\Contract 70A-2\5-0 Production\5-01 Drawings\Southwest Pump Station - Roof Modifications\Plumb\P-100.dwg Plotted:4/15/2011 10:27 AM By:Meeks, Kenneth

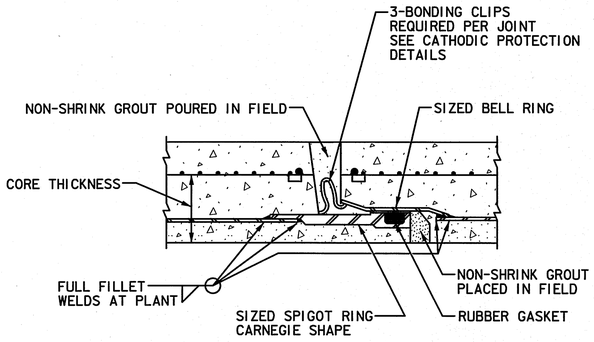

1/42 JOINT – EMBEDDED CYLINDER PIPE

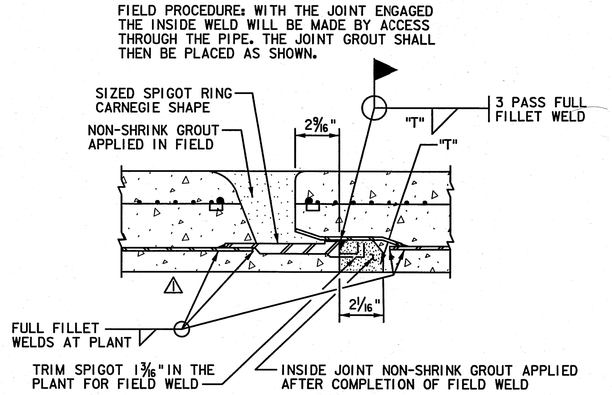

2/42 WELDED JOINT – EMBEDDED CYLINDER PIPE

NOTES

1. T = PIPE WALL THICKNESS AND SIZE OF FILLET ATTACHMENT WELD.
2. INSTALL 6-INCH FLANGED OUTLETS ON EITHER SIDE OF THE DISHED HEAD PLUG
3. DISHED HEAD PLUGS SHALL BE CAPABLE OF WITHSTANDING THE HYDROSTATIC TEST PRESSURE FROM EITHER SIDE, WITH THE OPPOSITE SIDE EMPTY OF WATER.
4. FLEXIBLE MASTIC SEALER SHALL BE APPLIED TO THE EXTERIOR OF THE JOINT PRIOR TO JOINT ENGAGEMENT WHEN PIPE IS INSTALLED IN A TUNNEL OR ENCASEMENT PIPE.

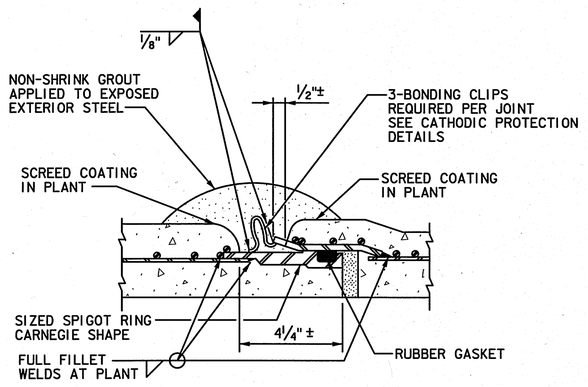

3/42 JOINT – LINED CYLINDER PIPE

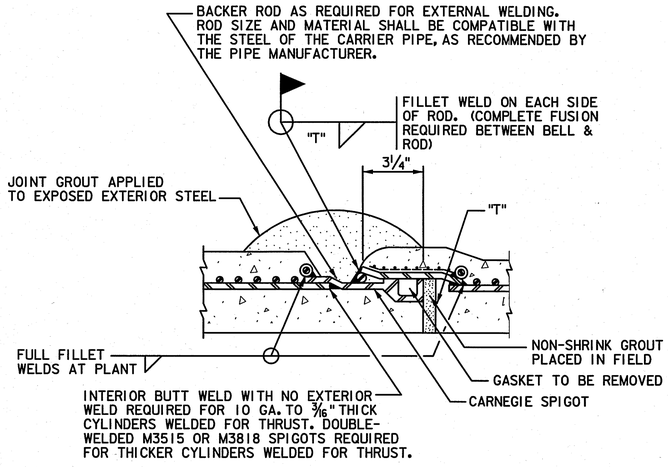

4/42 WELDED JOINT WITH TRIMMED SPIGOT
(FOR WATERLINES 36-INCHES DIAMETER AND LARGER)

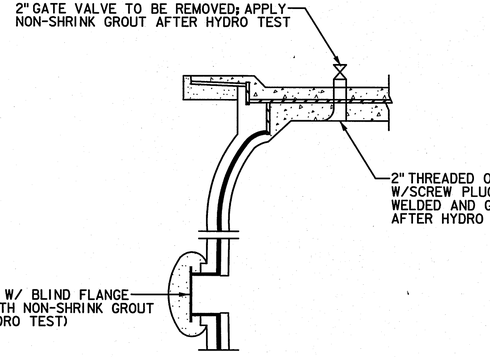

5/42 INTERNAL ELLIPTICAL DISHED HEAD PLUG
CONCRETE LINED CYLINDER PIPE SHOWN
(CONCRETE EMBEDDED CYLINDER PIPE IS SIMILAR,
AS APPROVED BY ENGINEER)

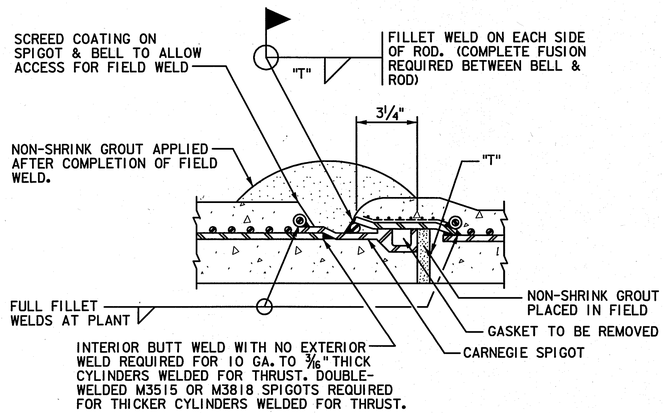

6/42 WELDED JOINT – LINED CYLINDER PIPE
(FOR WATER LINES LESS THAN 36-INCHES IN DIAMETER)
FIELD PROCEDURE: PLACE A 3/8" Ø STEEL ROD
SNUGLY INTO THE RECESS BETWEEN THE BELL
AND SPIGOT. THE WELD MUST BE CONTINUOUS.

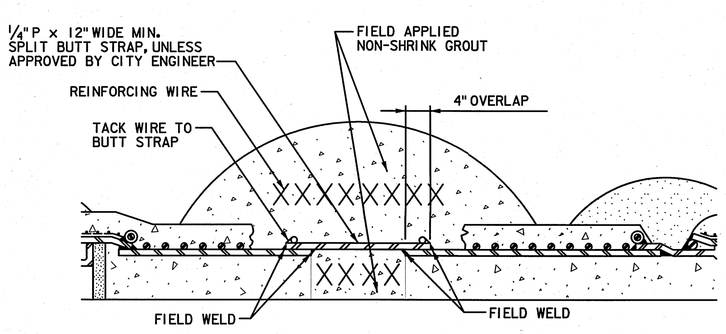

1. WELD SIZE SHALL MATCH THICKNESS OF BUTT STRAP AND CARRIER PIPE, AS RECOMMENDED BY THE PIPE MANUFACTURER.
2. INTERNAL WELD NOT REQUIRED FOR 30" DIAMETER PIPE AND SMALLER.
3. NO ANGULAR DEFLECTION ALLOWED.
4. EXAMINE COMPLETED WELDS IN ACCORDANCE WITH AWS D1.1 AT NO EXTRA COST.

7/42 CLOSURE PIECE
(STEEL PIPE SIMILAR)

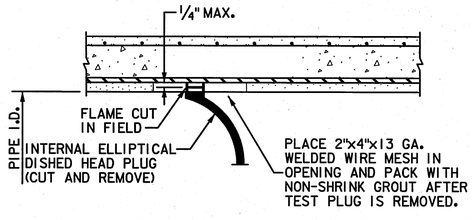

INTERNAL ELLIPTICAL
DISHED HEAD PLUG REMOVAL
EMBEDDED CYLINDER PIPE

8/42
CONCRETE EMBEDDED CYLINDER PIPE SHOWN
(CONCRETE LINED CYLINDER PIPE IS SIMILAR,
AS APPROVED BY ENGINEER)

SWTP
Surface Water Transmission Program

Lockwood, Andrews & Newnam, Inc.
A LEO A DALY COMPANY
2925 Briarpark Drive Houston, TX 77042

SURVEYED BY:
KUO & ASSOCIATES, INC.
C.O.H. Field Book P-5554

STATE OF TEXAS
ALISA GRUBER
95685
LICENSED PROFESSIONAL ENGINEER
Lockwood, Andrews & Newnam, Inc
Firm No. 2614

CITY OF HOUSTON
DEPARTMENT OF PUBLIC WORKS AND ENGINEERING

SWTP CONTRACT 74A-1

PRESTRESSED
CONCRETE CYLINDER
PIPE DETAILS

WBS NO.	S-000900-0109-4
DRAWING SCALE	NOT TO SCALE
CITY OF HOUSTON PM	ARTHUR C. MORRIS, P.E.
SHEET NO.	42 OF 91

PUBLIC WORKS AND ENGINEERING
ACCEPTED AND FILED
48326
CITY OF HOUSTON, TEXAS

Revisions: No. | Date | App.

12/28/2010 4:25:18 PM jmusku

L:\130-10337-004\4-0-Production\Civil\3-01-Drawings\Civil\3Standard Details\SW42-01-PCCP.dgn

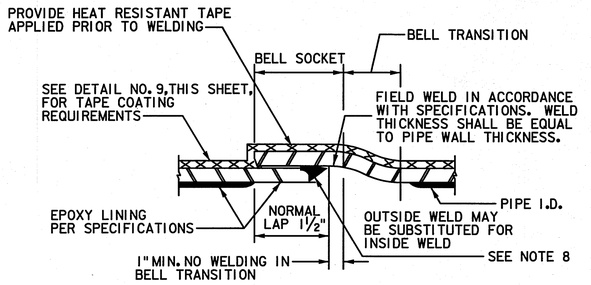

1 / 43 LAP-WELD FIELD JOINT – STEEL PIPE

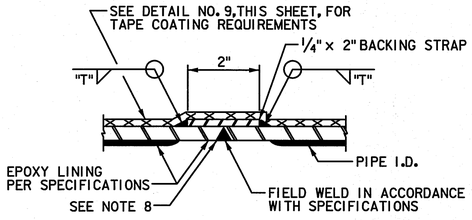

4 / 43 BUTT WELD FIELD JOINT – STEEL PIPE (TAPE COATED)

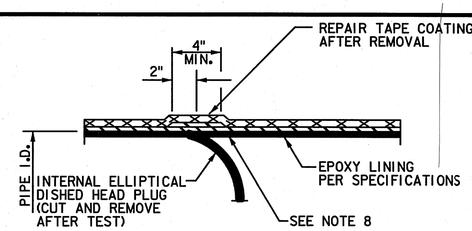

2 / 43 INTERNAL ELLIPTICAL DISHED HEAD PLUG REMOVAL STEEL PIPE

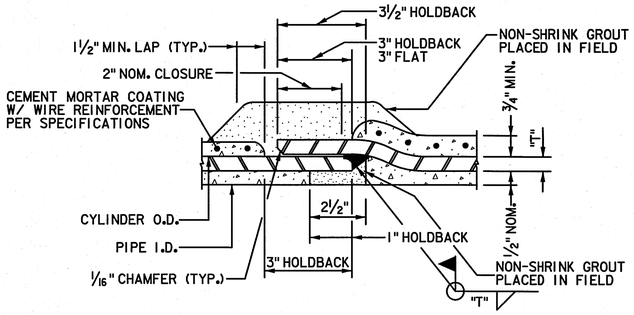

5 / 43 LAP-WELD FIELD JOINT STEEL PIPE WITH CEMENT MORTAR COATING

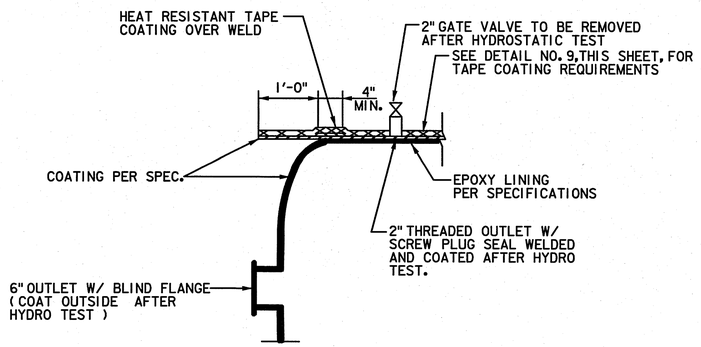

3 / 43 INTERNAL ELLIPTICAL DISHED HEAD PLUG STEEL PIPE

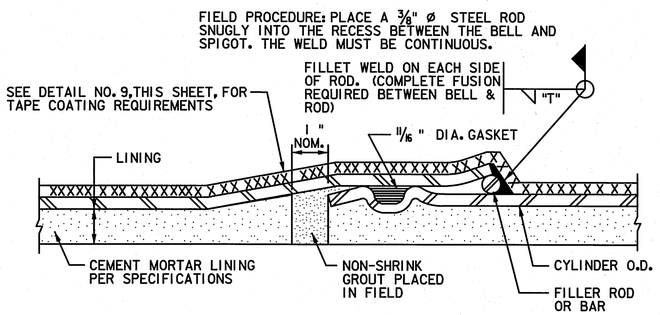

6 / 43 FIELD WELDED O-RING JOINT

(FOR ADJUSTMENTS ONLY AS APPROVED BY ENGINEER AND PIPE MANUFACTURER. SEE DETAIL NO. 9, THIS SHEET, FOR DIMENSIONS) REFER TO DETAIL 1 OR 4 FOR STANDARD WELDED JOINTS.

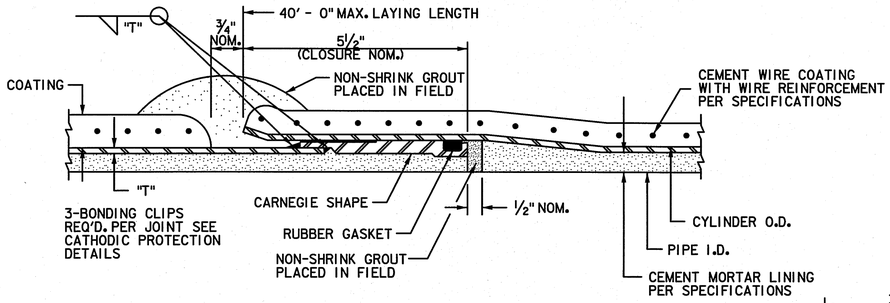

7 / 43 ROLLED JOINT STEEL PIPE

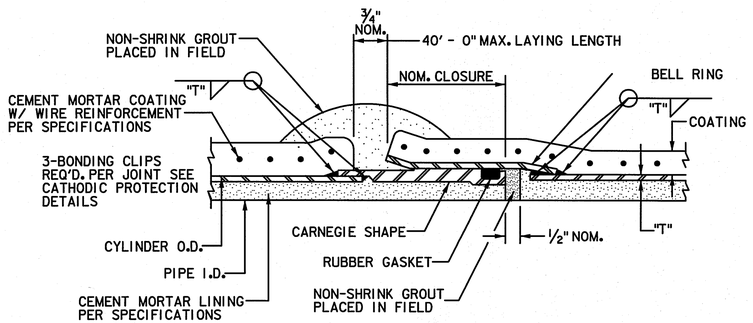

8 / 43 CARNEGIE JOINT – STEEL PIPE

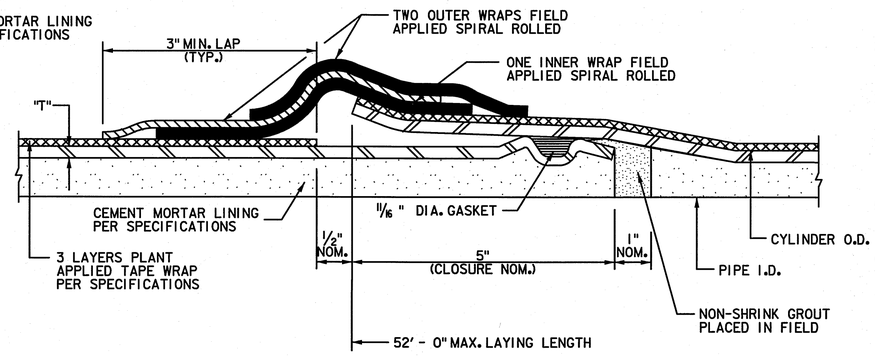

NOTE:
3-BONDING CLIPS REQUIRED PER JOINT SEE CATHODIC PROTECTION DETAILS.

9 / 43 O-RING STEEL PIPE JOINT DETAIL

(CEMENT MORTAR LINED & TAPE WRAPPED)

NOTES

1. T = STEEL PIPE WALL THICKNESS AND SIZE OF FILLET ATTACHMENT WELD.
2. ALL REFERENCES TO PIPE DIAMETER FOR THIS PROJECT SHALL SIGNIFY SIZE MEASURED TO INSIDE DIAMETER OF THE LINED PIPE.
3. REFER TO SPECIFICATIONS FOR POLYURETHANE ALTERNATIVE TO TAPE OR CEMENT MORTAR COATING.
4. DETAILS 1,2,3 AND 4 SHOW EPOXY LINING. CEMENT MORTAR LINING TO BE SIMILAR TO DETAILS ON THIS SHEET SHOWING CEMENT MORTAR LINED PIPE, AS APPROVED BY CITY ENGINEER.
5. DETAILS 5, 7 AND 8 SHOW CEMENT MORTAR COATING. TAPE COATING TO BE SIMILAR TO DETAIL 9, AS APPROVED BY CITY ENGINEER.
6. INSTALL 6 INCH FLANGED OUTLETS ON EITHER SIDE OF THE DISHED HEAD PLUG
7. DISHED HEAD PLUGS SHALL BE CAPABLE OF WITHSTANDING THE HYDROSTATIC TEST PRESSURE FROM EITHER SIDE, WITH THE OPPOSITE SIDE EMPTY OF WATER.
8. SEE SPECIFICATIONS FOR REPAIR OF EPOXY LINING
9. WHEN CEMENT MORTAR COATING IS USED FOR STEEL PIPE, FLEXIBLE MASTIC SEALER SHALL BE APPLIED TO THE EXTERIOR OF THE JOINT PRIOR TO JOINT ENGAGEMENT WHEN PIPE IS INSTALLED IN A TUNNEL OR ENCASEMENT PIPE.

SWTP
Surface Water Transmission Program

Lockwood, Andrews & Newnam, Inc.
A LEO A DALY COMPANY
2925 Briarpark Drive Houston, TX 77042

SURVEYED BY:
KUO & ASSOCIATES, INC.
C.O.H. Field Book P-5554

STATE OF TEXAS
ALISA GRUBER
95685
PROFESSIONAL ENGINEER
Lockwood, Andrews & Newnam, Inc. Firm No. 2614

CITY OF HOUSTON
DEPARTMENT OF PUBLIC WORKS AND ENGINEERING

SWTP CONTRACT 74A-1

STEEL PIPE DETAILS

WBS NO.	S-000900-0109-4
DRAWING SCALE	NOT TO SCALE
CITY OF HOUSTON PM	ARTHUR C. MORRIS, P.E.
SHEET NO.	43 OF 91

ACCEPTED AND FILED
48326
CITY DRAWING NO.
HOUSTON, TEXAS

No. Date Revisions App.

12/28/2010 4:25:19 PM jmusiku

L:\1130-1\0337-0064-4\c-0\Production\en-0\c-0\Drawings\Civil\Standard Details\0043-0-01-Steel Pipe.dgn

NOTE:
SHOULD CONTRACTOR DESIRE TO USE VALVES IN A THROTTLED POSITION FOR FILLING OF LINE SEGMENTS, CONTRACTOR IS CAUTIONED TO OBSERVE RECOMMENDATIONS OF VALVE MANUFACTURER IN ORDER TO PRECLUDE DAMAGE ASSOCIATED WITH THIS MODE OF OPERATION.

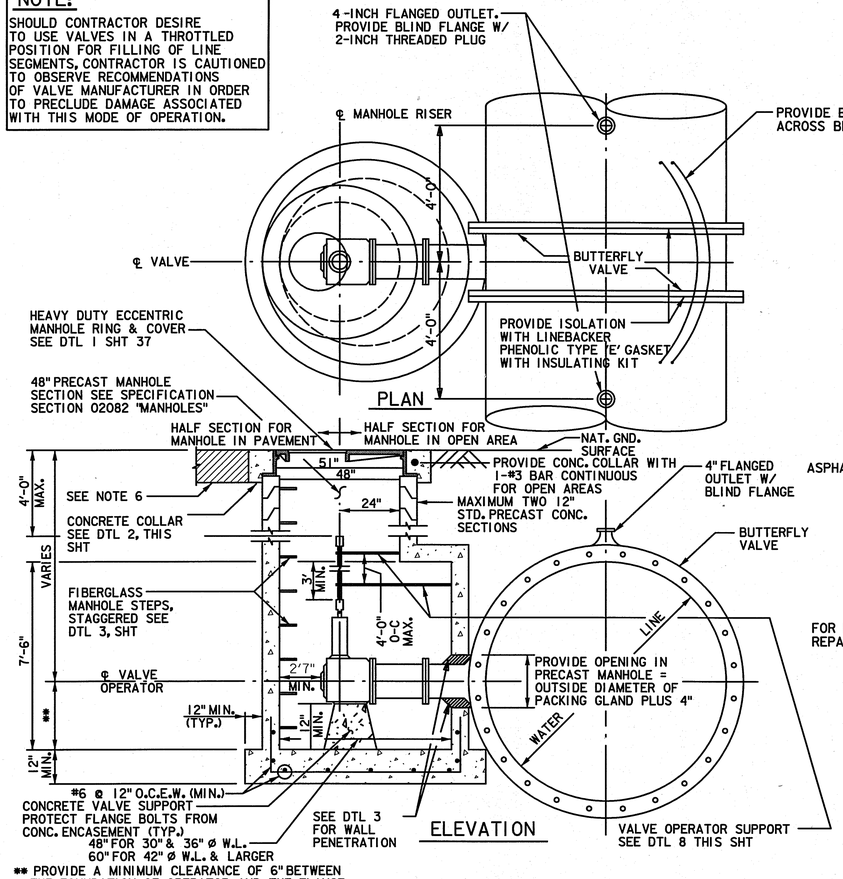

1/44 OPERATOR MANHOLE DETAILS FOR MAINLINE VALVES
(FOR WATER LINES 30-INCHES AND LARGER IN DIAMETER)

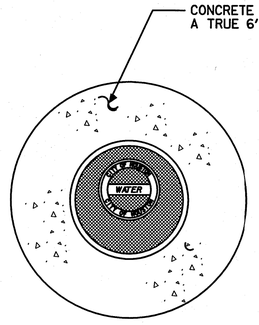

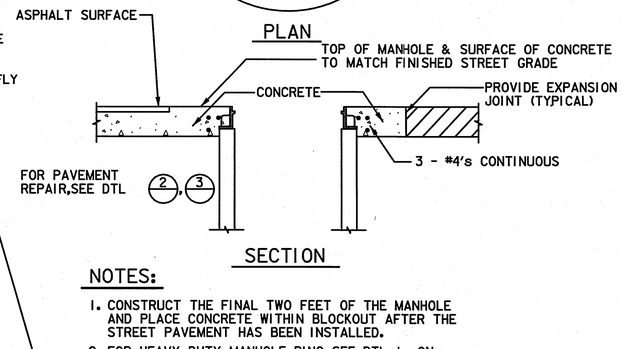

NOTES:
1. CONSTRUCT THE FINAL TWO FEET OF THE MANHOLE AND PLACE CONCRETE WITHIN BLOCKOUT AFTER THE STREET PAVEMENT HAS BEEN INSTALLED.
2. FOR HEAVY DUTY MANHOLE RING, SEE DTL 1 ON "AIR VALVE AND MANHOLE DETAILS" SHT.
3. FOR MANHOLE STEP DETAIL, SEE DTL 3 ON "AIR VALVE AND MANHOLE DETAILS" SHEET.

2/44 MANHOLE IN PAVEMENT

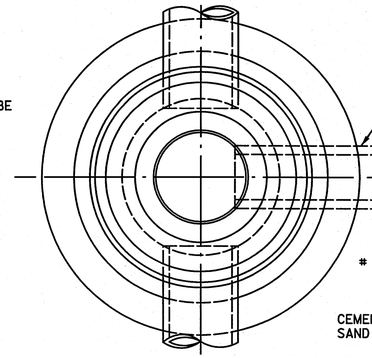

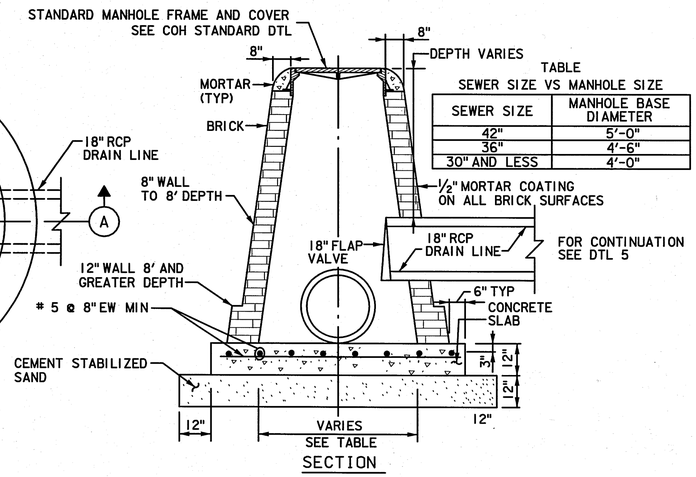

TABLE
SEWER SIZE VS MANHOLE SIZE

SEWER SIZE	MANHOLE BASE DIAMETER
42"	5'-0"
36"	4'-6"
30" AND LESS	4'-0"

DRAIN LINE CONNECTION W/STORM SEWER MANHOLE TYPE "C"
4/44

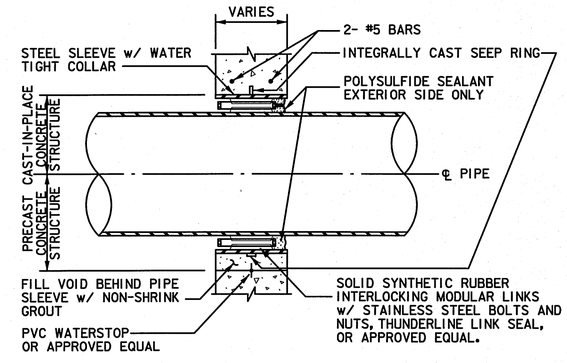

3/44 TYPICAL WALL PENETRATION DTL

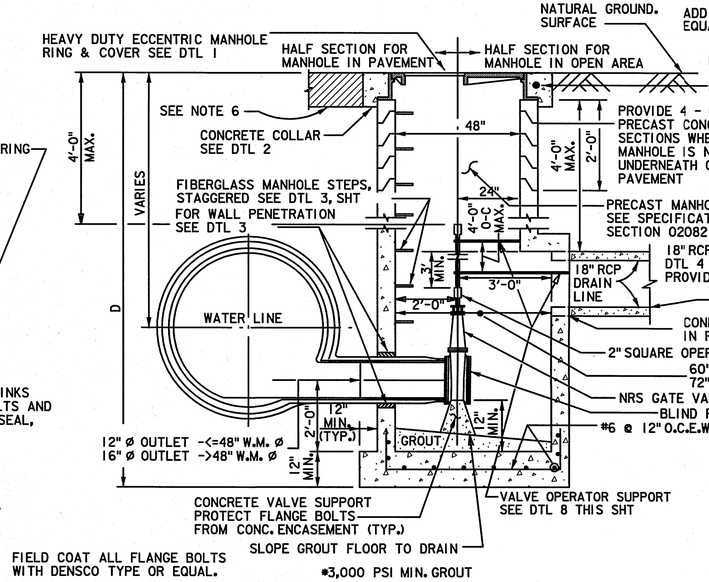

5/44 SERVICE MANHOLE DTL FOR DRAINLINE VALVE CONNECTION

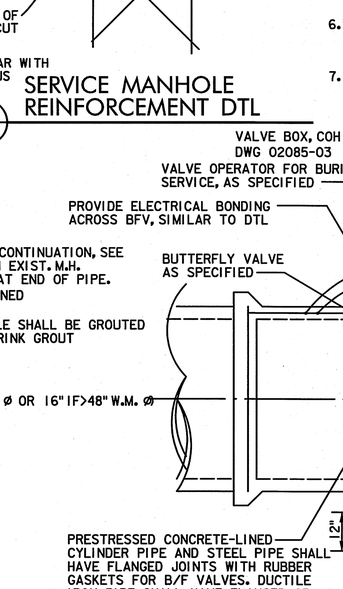

6/44 SERVICE MANHOLE REINFORCEMENT DTL

NOTES:
1. PROVIDE RAMNEK OR APPROVED EQUAL BETWEEN PRECAST SEGMENTS OF THE MANHOLE.
2. ALL JOINTS SHALL BE BONDED, SEE THE CATHODIC PROTECTION DETAILS.
3. FIELD COAT ALL FLANGE BOLTS, FLANGE COUPLING, FLANGE COUPLING ADAPTER AND THRUST TIE ASSEMBLIES AFTER ASSEMBLY TO 35 MDFT W/ 2 COATS OF COAL TAR EPOXY.
4. PLACE MANHOLE ON NEW COMPACTED (95% S.P.D.) BOTTOM IN ACCORDANCE WITH SPECIFICATION 02316.
5. 2" OPERATING NUT ON LARGE DIAMETER BUTTERFLY VALVES SHALL TURN CLOCKWISE TO OPEN VALVE.
6. FOR PAVEMENT REPAIR, SEE SHT "EXCAVATION, BEDDING, BACKFILL AND PAVEMENT REPAIR DETAILS".
7. FOR MANHOLES DEEPER THAN 20 FEET, PROVIDE SAFETY CLIMBING RAIL (SAF-T-CLIMB OR EQUAL)

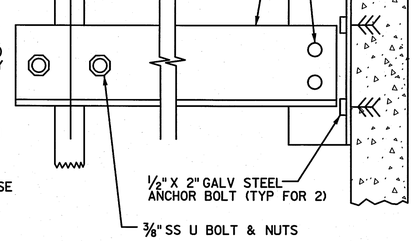

8/44 VALVE OPERATOR SUPPORT

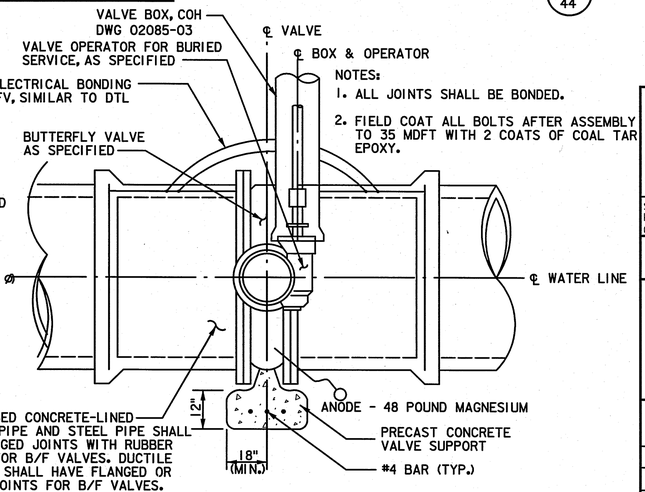

7/44 ISOLATION VALVE ASSEMBLY
(FOR WATER LINES SMALLER THAN 30-INCHES IN DIAMETER)

SWTP
Surface Water Transmission Program

Lockwood, Andrews & Newnam, Inc.
A LEO A DALY COMPANY
2925 Briarpark Drive Houston, TX 77042

SURVEYED BY:
KUO & ASSOCIATES, INC.
C.O.H. Field Book P-5554

STATE OF TEXAS
ALISA GRUBER
95685
LICENSED PROFESSIONAL ENGINEER
Lockwood, Andrews & Newnam, Inc. Firm No. 2614

CITY OF HOUSTON
DEPARTMENT OF PUBLIC WORKS AND ENGINEERING

SWTP CONTRACT 74A-1

VALVE AND SERVICE MANHOLE DETAILS

WBS NO.	S-000900-0109-4
DRAWING SCALE	NOT TO SCALE
CITY OF HOUSTON PM	ARTHUR C. MORRIS, P.E.
SHEET NO.	44 OF 91

ACCEPTED AND FILED
48326
CITY SECRETARY
HOUSTON, TEXAS

Revisions: No. | Date

L:\1350-10337-004\4-0-Product\cnt\4-01-Drawings\Civil\1\Standard Details\044-01-Valve & Service MH.dgn
12/28/2010
4:25:19 PM
JmuirKu

NOTE:
PROVIDE THREE (3) EXTRA CENTER LIDS FOR ECCENTRIC MANHOLE ACCESS LID. THE OTHER LIDS ARE TO BE DELIVERED TO C.O.H. UTILITY OPERATIONS

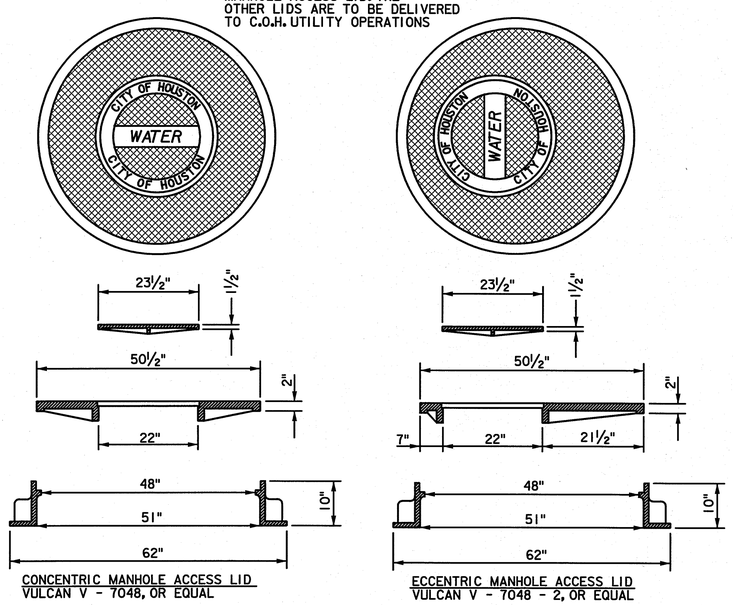

CONCENTRIC MANHOLE ACCESS LID
VULCAN V - 7048, OR EQUAL

ECCENTRIC MANHOLE ACCESS LID
VULCAN V - 7048 - 2, OR EQUAL

1/45 HEAVY DUTY MANHOLE RING AND COVER

NOTES:

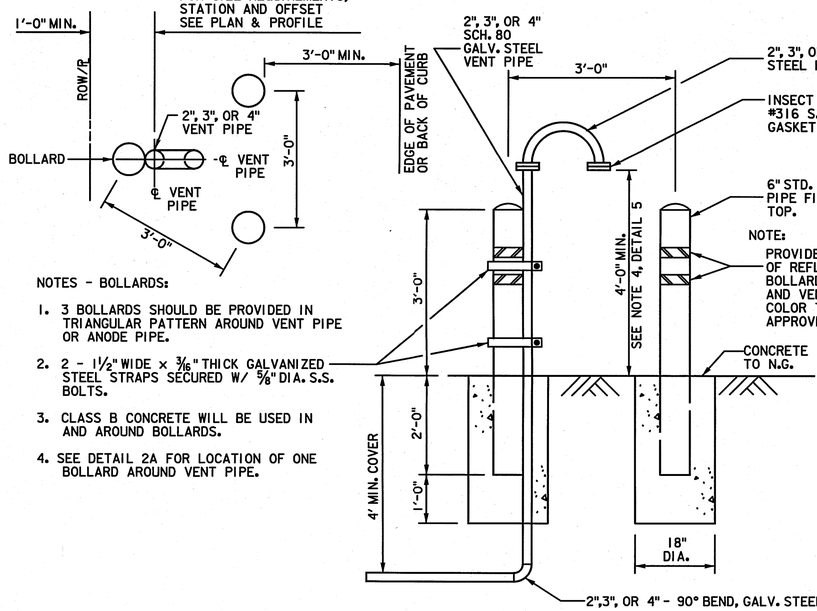

NOTES - BOLLARDS:

1. 3 BOLLARDS SHOULD BE PROVIDED IN TRIANGULAR PATTERN AROUND VENT PIPE OR ANODE PIPE.
2. 2 - 1½" WIDE x ⅜" THICK GALVANIZED STEEL STRAPS SECURED W/ ⅝" DIA. S.S. BOLTS.
3. CLASS B CONCRETE WILL BE USED IN AND AROUND BOLLARDS.
4. SEE DETAIL 2A FOR LOCATION OF ONE BOLLARD AROUND VENT PIPE.

2/45 VENT PIPE WITH 3 BOLLARDS DETAIL

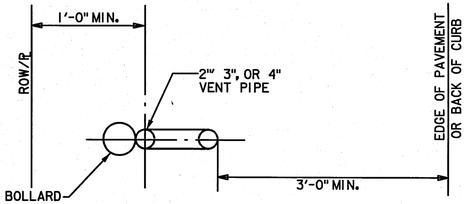

SEE PLAN & PROFILE FOR SIZE REQUIREMENTS, STATION AND OFFEST.

2A/45 VENT PIPE WITH 1 BOLLARD DETAIL

Air Valve & Types				
Water Main Diameter	APCO* Series	Air Valve Size	APCO*Model	MH SIZE
<30"	154C	2"	145C	60"
		3"	147C	60"
30" - 36"	154C	2"	145C	60"
		3"	147C	60"
>36"	1500C	3"	1503C	72"
			1503TC	72"
		4"	1504C	72"

*or approved equal

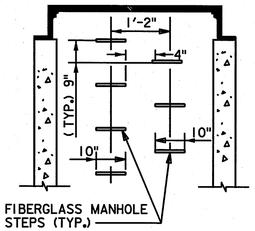

FIBERGLASS MANHOLE STEPS (TYP.)

NOTES - MANHOLE STEPS:

1. PROVIDE MODEL PSI-PF STEPS AS MANUFACTURED BY M.A. INDUSTRIES INC. OR APPROVED EQUAL.
2. BOTTOM MANHOLE STEP SHALL BE NO HIGHER THAN 12" ABOVE MANHOLE INVERT.

3/45 MANHOLE STEP DETAIL

NOTES

1. PROVIDE RAM-NEK OR APPROVED EQUAL BETWEEN PRECAST SEGMENTS OF THE MANHOLE.
2. FOR MANHOLES DEEPER THAN 20 FEET, SAFETY CLIMBING RAIL MUST BE PROVIDED (SAF-T-CLIMB OR APPROVED EQUAL).
3. PIPING AND APPURTENANCES OF THE SAME DIAMETER AND CONSTRUCTED OF THE SAME MATERIAL AND CLASS.
4. VERIFY THAT LOCATION OF VENT PIPE SCREEN IS 1 FOOT ABOVE 100-YEAR FLOOD PLAIN ELEVATION OR 4 FEET ABOVE NATURAL GROUND WHICHEVER IS HIGHER.
5. WHEN ONLY ACCESS MANHOLE IS CALLED OUT ON PLAN AND PROFILE, DELETE REQUIREMENTS FOR AIR VALVE, VENT PIPING, AND BOLLARDS. PROVIDE 6" FLANGED GATE VALVE HANDWHEEL OPERATED W/BLIND FLANGE.
6. REFER TO PLAN AND PROFILE SHEETS FOR LOCATIONS OF AIR VALVES.
7. FOR PAVEMENT REPAIR, SEE SHEET "EXCAVATION, BEDDING, BACKFILL AND PAVEMENT REPAIR DETAILS".
8. PROVIDE AN APPROVED PETROLEUM BASED TAPE ENCAPSULATING ALL BOLTS IN ACCESS MANHOLE.
9. IF DEPTH OF COVER * 5', USE LOW PROFILE AIR VALVE ASSEMBLY DETAIL

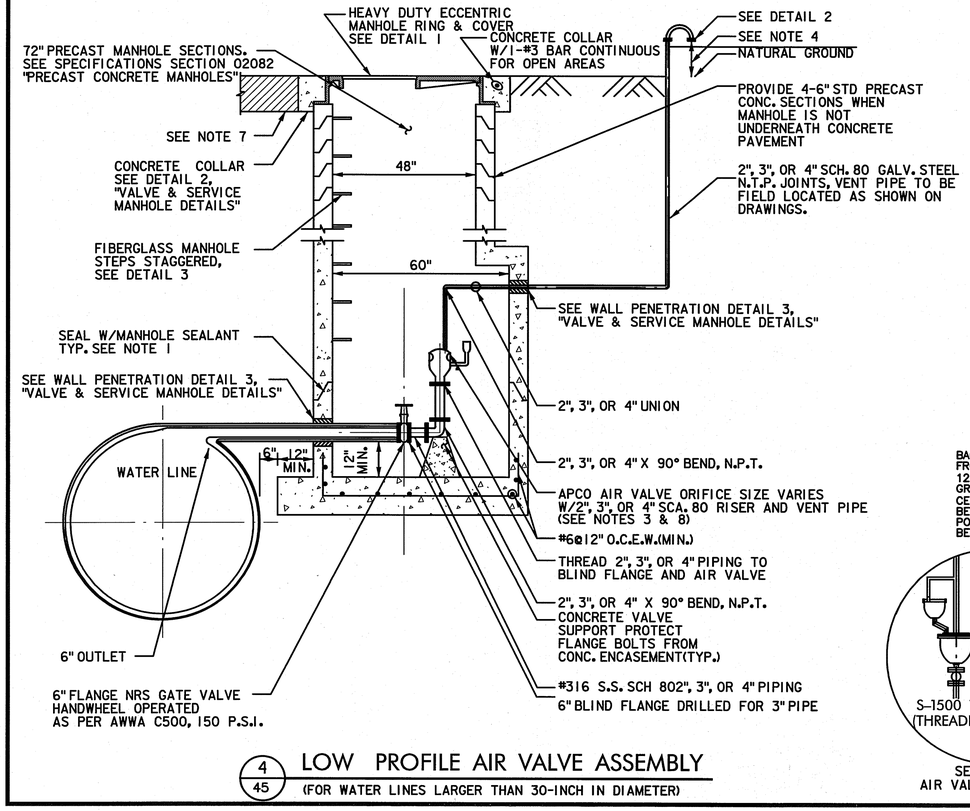

4/45 LOW PROFILE AIR VALVE ASSEMBLY
(FOR WATER LINES LARGER THAN 30-INCH IN DIAMETER)

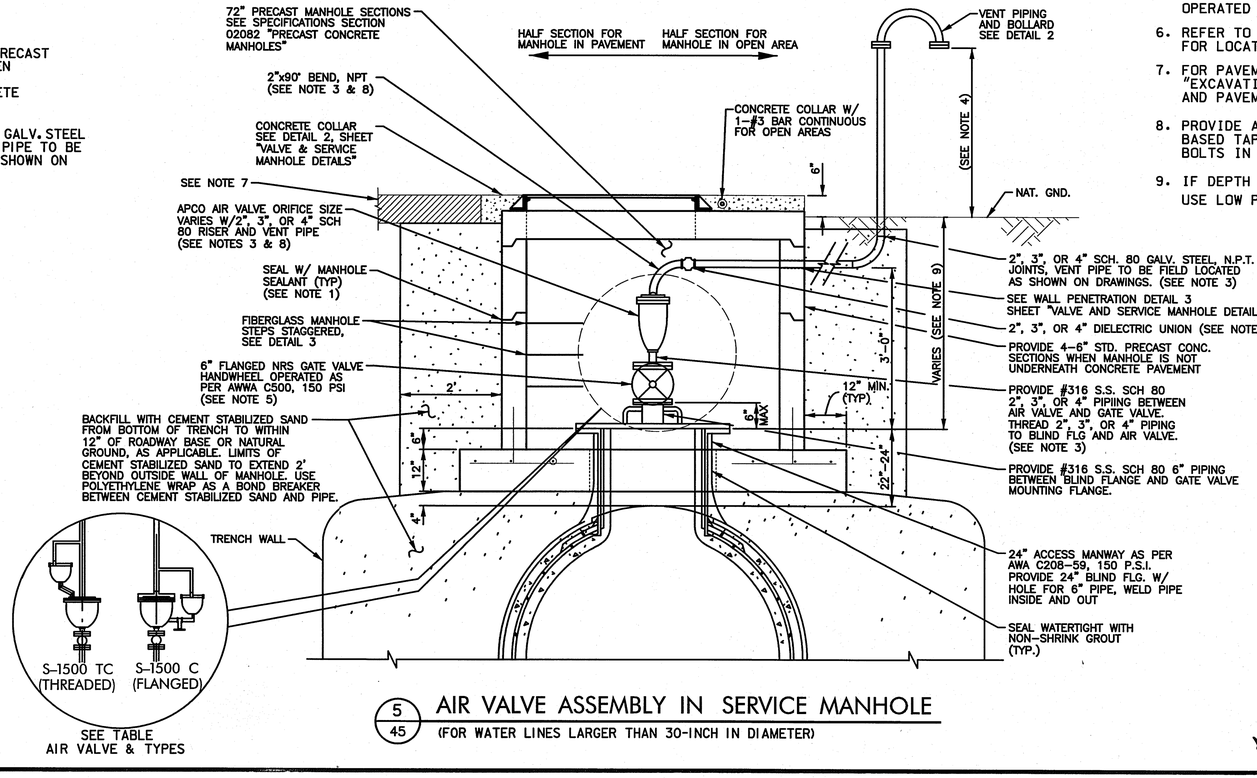

5/45 AIR VALVE ASSEMBLY IN SERVICE MANHOLE
(FOR WATER LINES LARGER THAN 30-INCH IN DIAMETER)

SWTP
Surface Water Transmission Program

Lockwood, Andrews & Newnam, Inc.
A LEO A DALY COMPANY
2925 Briarpark Drive Houston, TX 77042

SURVEYED BY:
KUO & ASSOCIATES, INC.
C.O.H. Field Book P-5554

ALISA GRUBER
95685
LICENSED PROFESSIONAL ENGINEER
STATE OF TEXAS
Lockwood, Andrews & Newnam, Inc. Firm No. 2614

CITY OF HOUSTON
DEPARTMENT OF PUBLIC WORKS AND ENGINEERING

SWTP CONTRACT 74A-1

AIR VALVE AND MANHOLE DETAILS

WBS NO.	S-000900-0109-4
DRAWING SCALE	NOT TO SCALE
CITY OF HOUSTON PM	ARTHUR C. MORRIS, P.E.
SHEET NO.	45 OF 91

PUBLIC WORKS AND ENGINEERING
ACCEPTED AND FILED
48326
CITY OF HOUSTON, TEXAS

No. Date Revisions

12/28/2010

L:\1350-1037-00\4-0-Production\4-01-Drawings\Civil\Standard details\AVMS-01-Conn Air Valve and Mh.dgn
jmusiku
4:25:20 PM
12/28/2010

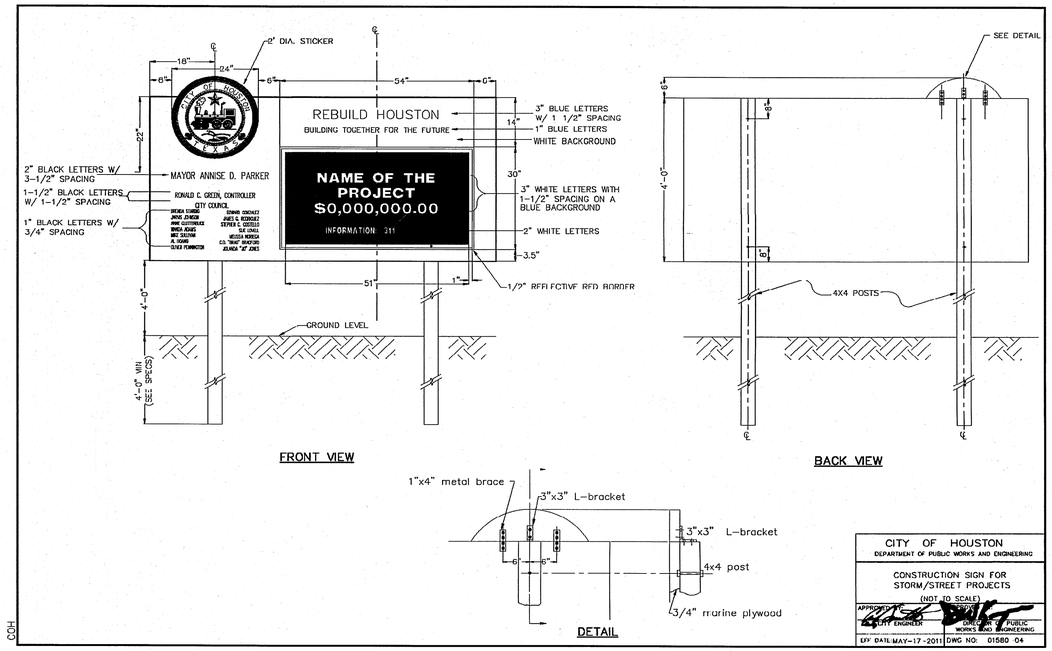

1/46 CONSTRUCTION SIGN
N.T.S.

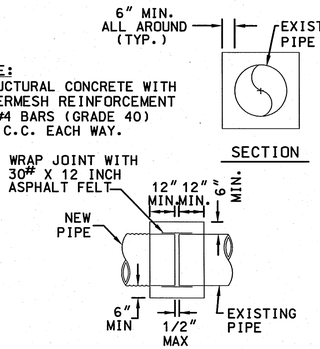

2/46 TYPICAL CONCRETE COLLAR DTL

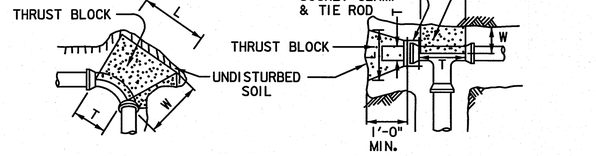

90° BEND
(45° BENDS SIMILAR)

MINIMUM BLOCKING DIMENSION IN INCHES												
PIPE SIZE	90° BEND				45° BEND				TEE/PLUG			
	W	H	L	T	W	H	L	T	W	H	L	T
4"	6	12	14	10	6	8	11	8	6	10	12	12
6"	8	14	26	12	8	14	14	12	8	14	19	19
8"	10	16	40	16	10	18	20	16	10	18	26	26
10"	12	24	42	18	12	22	25	18	12	24	30	30
12"	14	36	40	30	14	26	30	22	14	26	40	40

NOTES:

1. DEPTH "W" MAY BE GREATER THAN SPECIFIED TO ALLOW WORKING SPACE.
2. BLOCKING MUST BE PLACED AGAINST UNDISTURBED EARTH. WHERE THIS IS NOT POSSIBLE, THE FILL BETWEEN THE BEARING SURFACE AND UNDISTURBED SOIL MUST BE COMPACTED TO AT LEAST 90% STANDARD PROCTOR DENSITY.
3. PROVIDE CONCRETE IN ACCORDANCE WITH STANDARD SPECIFICATION SECTION 03315 - CONCRETE FOR UTILITY CONSTRUCTION.
4. BLOCKING DIMENSIONS SHOWN ARE BASED ON 3000 PSI SOIL BEARING STRENGTH AND 125 PSI INTERNAL WATER PRESSURE. FOR OTHER SOIL CONDITIONS, MULTIPLY DIMENSIONS "L" AND "H" BY THE APPROPRIATE CORRECTION FACTOR.

TEE & PLUG

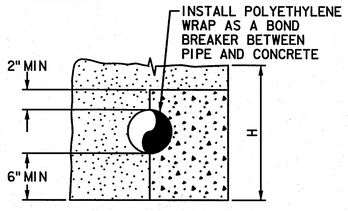

PIPE
CROSS SECTION

CORRECTION FACTORS		
SOIL TYPE	SOIL BEARING STRENGTH S_b(lb/ft²)	MULTIPLY "L" AND "H" BY
SOFT CLAY	1000	1.73
SILT	1500	1.41
SANDY SILT	3000	1.00
SAND	4000	0.87
SANDY CLAY	6000	0.71
HARD CLAY	9000	0.58

5/46 CONCRETE HORIZONTAL THRUST BLOCK
N.T.S.

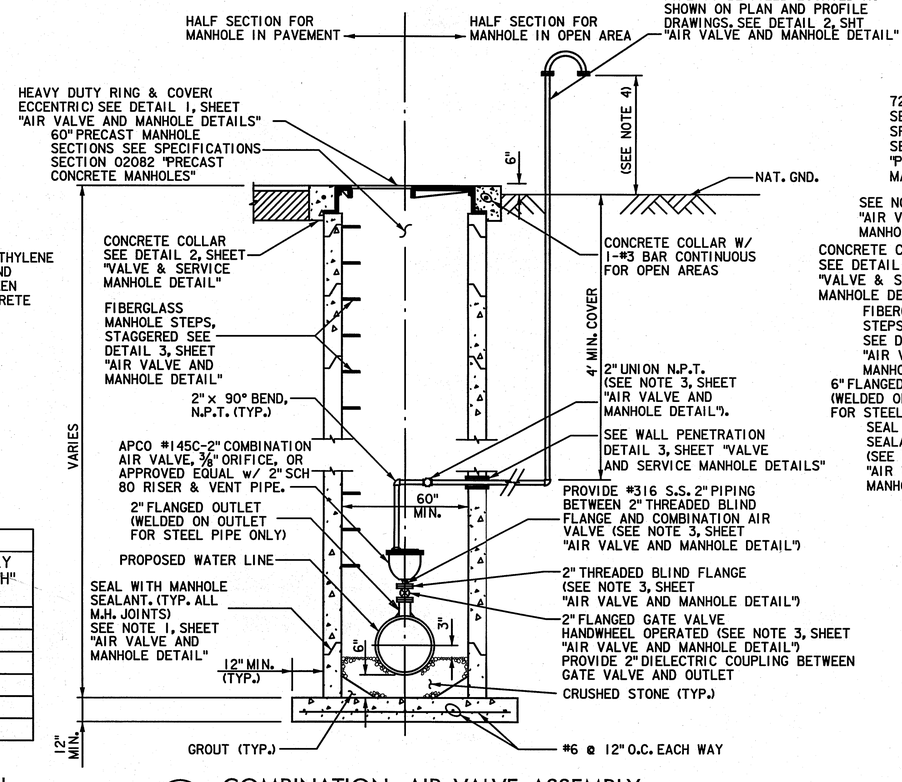

3/46 COMBINATION AIR VALVE ASSEMBLY
(FOR WATER LINES 30-INCHES IN DIAMETER AND SMALLER)

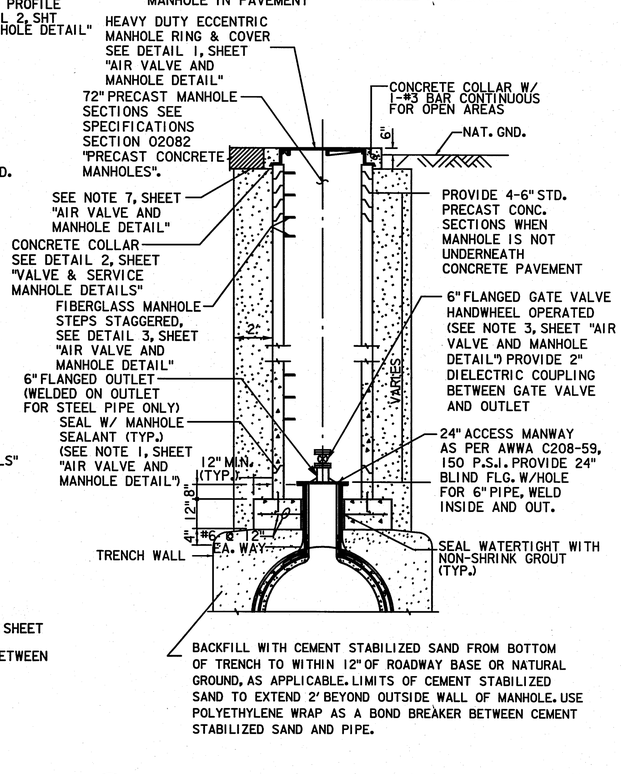

4/46 ACCESS MANHOLE
(FOR WATER LINES LARGER THAN 30-INCHES IN DIAMETER)

SWTP
Surface Water Transmission Program

Lockwood, Andrews & Newnam, Inc.
A LEO A DALY COMPANY
2925 Briarpark Drive Houston, TX 77042

SURVEYED BY:
KUO & ASSOCIATES, INC.
C.O.H. Field Book P-5554

STATE OF TEXAS
ALISA GRUBER
95685
LICENSED PROFESSIONAL ENGINEER
Lockwood, Andrews & Newnam, Inc. Firm No. 2614

CITY OF HOUSTON
DEPARTMENT OF PUBLIC WORKS AND ENGINEERING

SWTP CONTRACT 74A-1

MISCELLANEOUS WATER LINE DETAILS

WBS NO. S-000900-0109-4	ACCEPTED AND FILED 48326 CITY OF HOUSTON
DRAWING SCALE	NOT TO SCALE
CITY OF HOUSTON PM	ARTHUR C. MORRIS, P.E.
SHEET NO. 46 OF 91	

No.	Date	Revisions	App.

6/20/2011
9:41:42 AM
MMcDonald
LX\130-10337-0045\4-0-Product\on\v4-01-Drawings\Civil\Standard Details\A046-01-Misc ML.dgn

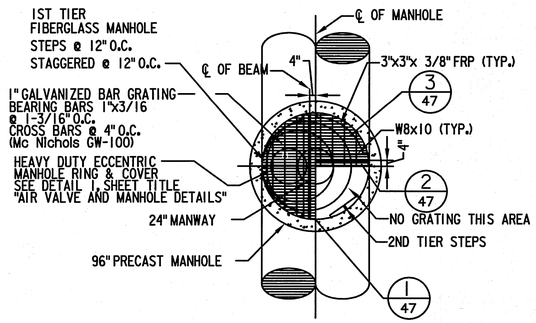

PLAN VIEW OF LANDING

NOTE:

1. ALL STEEL TO BE GRADE 40.
2. ALL CONCRETE TO BE CLASS "A".
3. COORDINATE THE LOCATION AND TYPE JOINTS BETWEEN OFFSET BOX AND PRECAST SECTIONS.
4. PROVIDE RAMNEK OR APPROVED EQUAL BETWEEN PRECAST SEGMENTS OF THE MANHOLE.

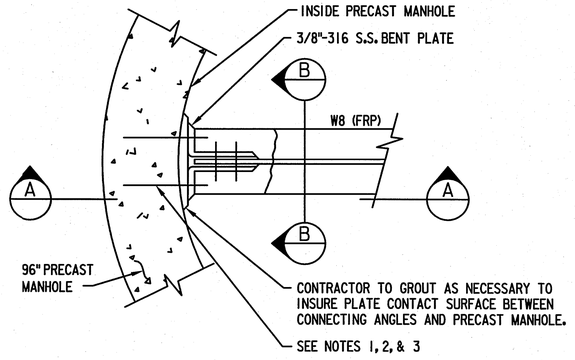

BEAM CONNECTION DETAIL (2/47)

N.T.S.

NOTES:

1. CONTRACTOR TO DRILL 1 1/4" DIAMETER HOLES 4" DEEP, INTO PRECAST MANHOLE FOR 3/4" DIAMETER ANCHOR BOLTS.
2. GROUT IN 3/4" DIAMETER ANCHOR BOLTS WITH GRUTEM 435 AS MANUFACTURED BY I.W. INDUSTRIES, OR APPROVED EQUAL, MANUFACTURERS INSTRUCTIONS IN THE USE OF ALL MATERIALS SPECIFIED SHALL BE FOLLOWED IN STRICT ACCORDANCE.
3. ANCHOR BOLTS SHALL BE 3/4" DIAMETER x 6" LONG 316 S.S. ALL THREAD BOLTS WITH 2" PROJECTION.

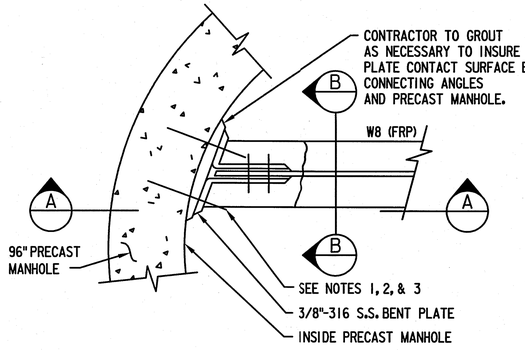

BEAM CONNECTION DETAIL (3/47)

N.T.S.

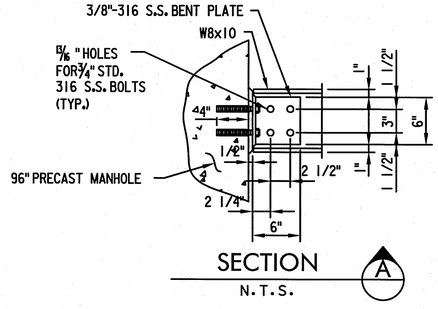

SECTION (A)

N.T.S.

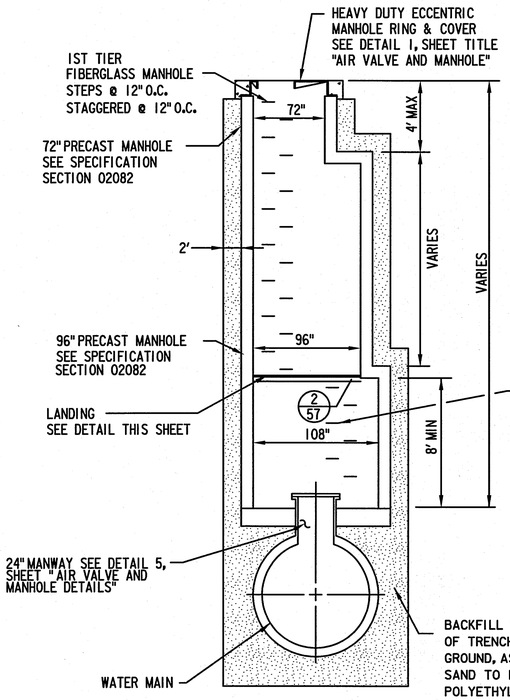

BACKFILL WITH CEMENT STABILIZED SAND FROM BOTTOM OF TRENCH TO WITHIN 12" OF ROADWAY BASE OR NATURAL GROUND, AS APPLICABLE. LIMITS OF CEMENT STABILIZED SAND TO EXTEND 2' BEYOND OUTSIDE WALL OF MANHOLE. USE POLYETHYLENE WRAP AS A BOND BREAKER BETWEEN CEMENT STABILIZED SAND AND PIPE.

PROFILE

EXTRA DEPTH – ACCESS MANHOLE

(SEE PLANS FOR LOCATION)
SCALE: N.T.S.

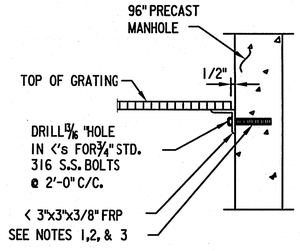

ANGLE CONNECTION DETAIL (4/47)

N.T.S.

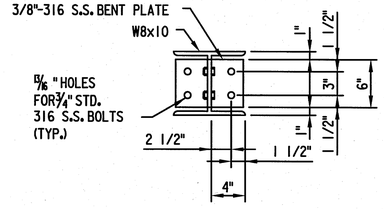

SECTION (B)

N.T.S.

SWTP
Surface Water Transmission Program

LGN
Lockwood, Andrews & Newnam, Inc.
A LEO A DALY COMPANY
2925 Briarpark Drive Houston, TX 77042

SURVEYED BY:
KUO & ASSOCIATES, INC.
C.O.H. Field Book P-5554

STATE OF TEXAS
ALISA GRUBER
95685
LICENSED PROFESSIONAL ENGINEER
Lockwood, Andrews & Newnam, Inc.
Firm No. 2614

CITY OF HOUSTON
DEPARTMENT OF PUBLIC WORKS AND ENGINEERING

SWTP CONTRACT 74A-1

STANDARD EXTRA DEPTH MANHOLE DETAIL

WBS NO.	S-000900-0109-4
DRAWING SCALE	NOT TO SCALE
CITY OF HOUSTON PM	ARTHUR C. MORRIS, P.E.
SHEET NO.	47 OF 91

PUBLIC WORKS AND ENGINEERING
ACCEPTED AND FILED
48326
CITY DRAWING NUMBER
HOUSTON, TEXAS

Revisions: No. | Date

L:\1130-10337-004\4-0-Production\4-01-Drawings\Civil\Standard Details\4a47-dt1-Xbeam-sht.dgn
12/29/2010
4:25:22 PM
jmusku

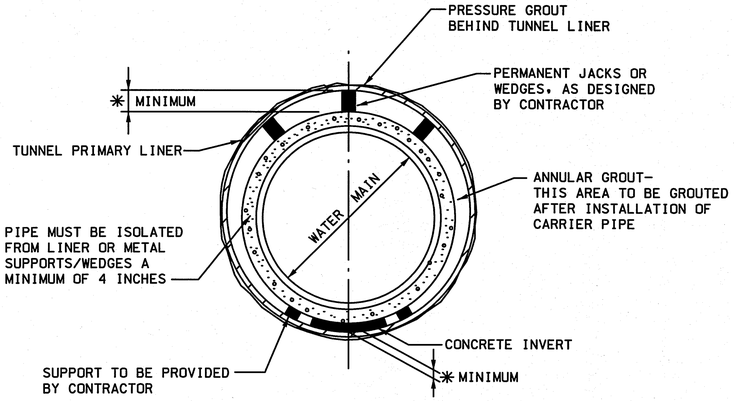

NOTES:

1. DETAIL IS FOR PRESTRESSED CONCRETE CYLINDER PIPE (STEEL PIPE ALTERNATE SIMILAR).
2. MINMUM CLEARANCES SHOWN ON THE PLAN & PROFILE DRAWINGS ARE TO THE O.D. OF TUNNEL LINER. ADJUST PROFILE AS REQUIRED TO MAINTAIN CLEARANCES IDENTIFIED. NO SEPARATE PAY.

1/48 TUNNEL DETAIL

(FOR WATER MAINS 36 INCHES AND LARGER)

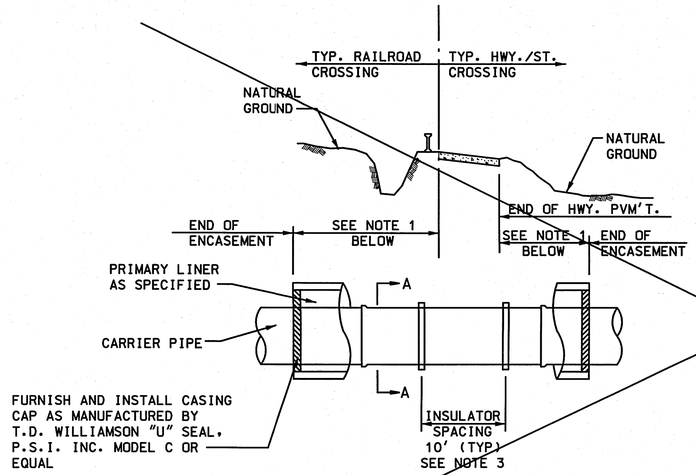

TUNNEL ELEVATION

NOTES:

1. LENGTH OF ENCASEMENT SHALL BE AS SHOWN ON THE PLAN & PROFILE DRAWINGS.
2. LAY CASING PIPE IN OPEN CUT, TUNNEL OR BORE, AS NOTED ON PLAN & PROFILE DRAWINGS.
3. SEE SPECIFICATIONS FOR APPROPRIATE MODEL ACCORDING TO PIPE DIAMETER.

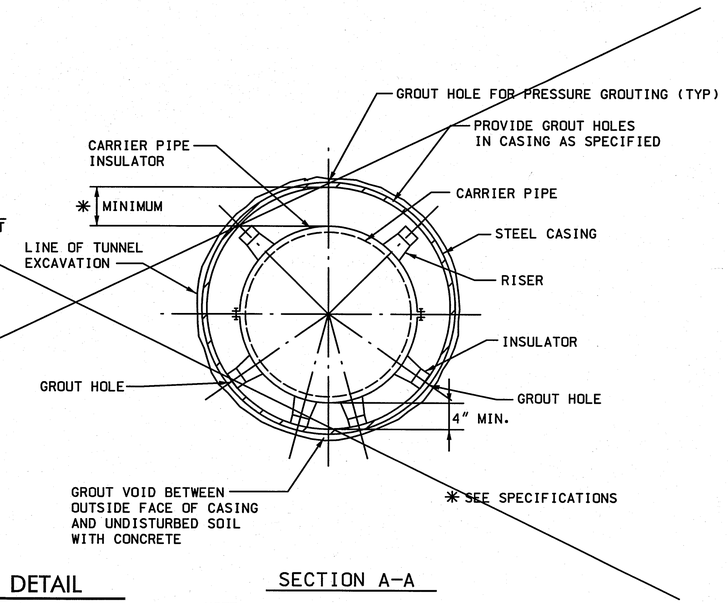

2/48 CASING DETAIL

(FOR WATER MAINS LESS THAN 36-INCHES IN DIAMETER)

SECTION A-A

NOTE
1. ALL TUNNELS IN PPCM AREA ARE TO BE GROUTED

MINIMUM TUNNEL LINER /CASING SIZES AND THICKNESS

I	LOCATION	WATER MAIN DIA.	PIPE MATERIAL	NOMINAL DIAMETER (IN.) /WALL THICKNESS SQ. IN/FT (1)		CASING I.D. WALL THICKNESS IN/IN
				2-FLANGE (2) LINER PLATE	4-FLANGE LINER PLATE	
	STA 47+47.75 TO STA 48+72.16	48"	Steel	–	–	66" / 0.250"
			DIP	–	–	72" / 0.3125"
			PCCP	–	–	72" / 0.3125"
	STA STA 52+10.24 TO 55+00.71	48"	Steel	66" / 0.075"	66" / 0.105"	66" / 0.250"
			DIP	76" / 0.105"	75" / 0.105"	72" / 0.3125"
			PCCP	76" / 0.105"	75" / 0.105"	72" / 0.3125"
	STA 66+22.00 TO STA 67+32.00	48"	Steel	66" / 0.075"	66" / 0.105"	66" / 0.250"
			DIP	76" / 0.075"	75" / 0.105"	72" / 0.3125"
			PCCP	76" / 0.075"	75" / 0.105"	72" / 0.3125"
	STA 69+79.87 TO STA 70+04.84	48"	Steel	66" / 0.075"	66" / 0.105"	66" / 0.750"
			DIP	76" / 0.105"	75" / 0.105"	72" / 0.8125"
			PCCP	76" / 0.105"	75" / 0.105"	72" / 0.8125"

NOTES:

1. DIAMETER OF LINER PLATE IS AT NEUTRAL AXIS.
2. LINER PLATE IS TWO FLANGE AND NOMINALLY 2-INCH CORRUGATION BY 6-INCH PROFILE.

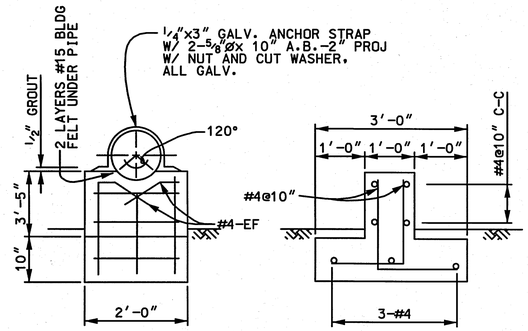

3/48 PIPE SUPPORT

SWTP
Surface Water Transmission Program

Lockwood, Andrews & Newnam, Inc.
A LEO A DALY COMPANY
2925 Briarpark Drive Houston, TX 77042

SURVEYED BY:
KUO & ASSOCIATES, INC.
C.O.H. Field Book P-5554

STATE OF TEXAS
ALISA GRUBER
95685
LICENSED PROFESSIONAL ENGINEER
12-21-11
Lockwood, Andrews & Newnam, Inc. Firm No. 2614

CITY OF HOUSTON
DEPARTMENT OF PUBLIC WORKS AND ENGINEERING

SWTP CONTRACT 74A-1

TUNNEL AND CASING DETAILS AND PIPE SUPPORT DETAIL

WBS NO. S-000900-0109-4

DRAWING SCALE
NOT TO SCALE

CITY OF HOUSTON PM
ARTHUR C. MORRIS, P.E.

SHEET NO. 48 OF 91

ACCEPTED AND FILED
48326
KEY DRAWING NO.

Revisions: No. | Date | Appd.

12/28/2010 4:25:22 PM jmusku

L:\1350-1033\7-00\4-0-Production\4-01-Drawings\Civil\Standard Details\4048-tn1-74a1b.dgn

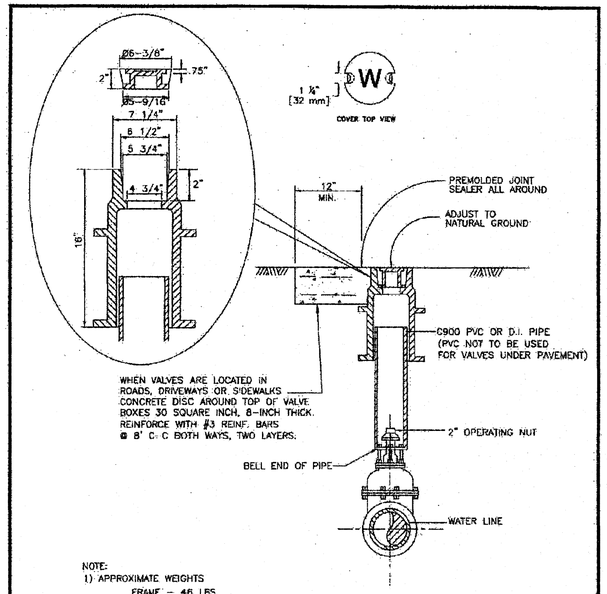

NOTE:
1) APPROXIMATE WEIGHTS
FRAME – 46 LBS
COVER – 10 LBS
2) MATERIAL – GRAY IRON ASTM A48 CL35B

CITY OF HOUSTON	
DEPARTMENT OF PUBLIC WORKS AND ENGINEERING	
VALVE BOX DETAIL	
(NOT TO SCALE)	
APPROVED BY: CITY ENGINEER	APPROVED BY: DIRECTOR OF PUBLIC WORKS AND ENGINEERING
EFF. DATE: JULY 01, 2010	DWG. NO. 02085-03

NOTE:
1. MATERIALS AND COATINGS TO BE IN ACCORDANCE WITH WATER LINE STANDARD SPECIFICATIONS.
2. RESTRAIN EXISTING PIPING BEYOND STEEL SECTION AS REQUIRED TO PREVENT MOVEMENT.
3. AS PER DESIGN GUIDELINE.

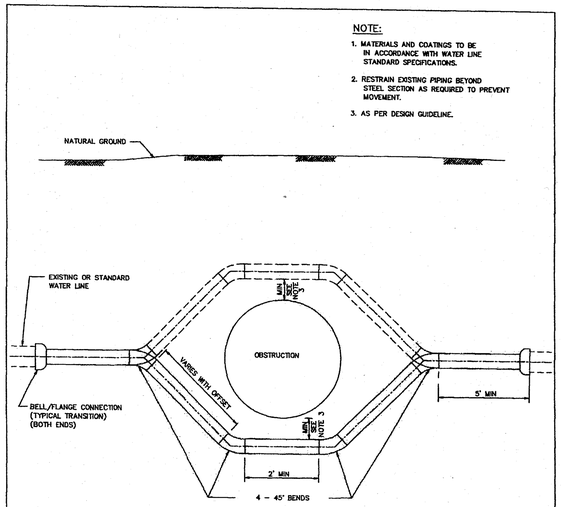

PIPE OFFSET ALTERNATES

1. DUCTILE IRON PIPE PRESSURE 250 PSI WITH APPROVED RESTRAINED JOINTS.
2. PVC PIPE WITH INTEGRAL RESTRAINED JOINT SYSTEM, OR DUCTILE – IRON RESTRIMED JOINT FITTINGS, EPOXY LINED AND COATED. USE 250 PSI AWWA C900 DR 14 FOR PVC RESTRAINED JOINTS.
3. PVC NOT ALLOWED FOR GREATER THAN 20 FT OF COVER OR FOR DIAMETER LARGER THAN 20 IN.
4. USE ONLY DUCTILE IRON AND PVC PRODUCTS LISTED ON OCE DIVISION APPROVED PRODUCTS LIST AND IN ACCORDANCE WITH CITY STANDARD SPECIFICATIONS.

CITY OF HOUSTON	
DEPARTMENT OF PUBLIC WORKS AND ENGINEERING	
TYPICAL STEEL PIPE OFFSET SECTION FOR WATER LINES	
(NOT TO SCALE)	
APPROVED BY: CITY ENGINEER	APPROVED BY: DIRECTOR OF PUBLIC WORKS AND ENGINEERING
EFF DATE: JULY-01-2010	DWG NO: 02511-01

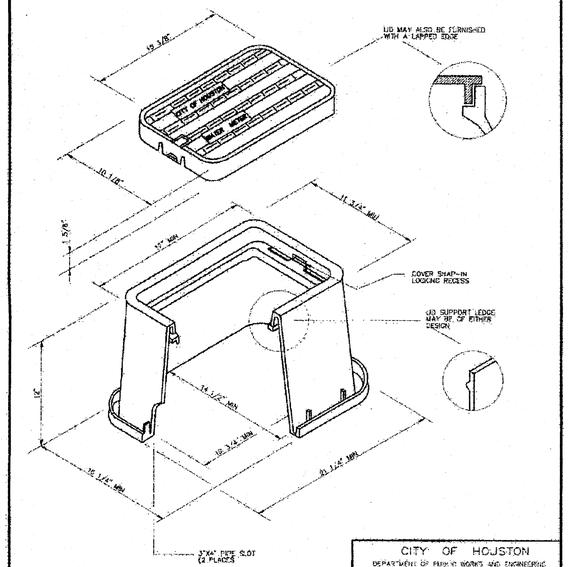

NOTE
1. LID MUST BE ABLE TO ACCEPT THE CITY'S AMR TRANSMITTING ENDPOINT.

CITY OF HOUSTON	
DEPARTMENT OF PUBLIC WORKS AND ENGINEERING	
STANDARD PLASTIC METER BOX FOR ⅝" AND 1" METERS	
(NOT TO SCALE)	
APPROVED BY: CITY ENGINEER	APPROVED BY: DIRECTOR OF PUBLIC WORKS AND ENGINEERING
EFF DATE: JUL-01-2010	DWG NO: 02085-01

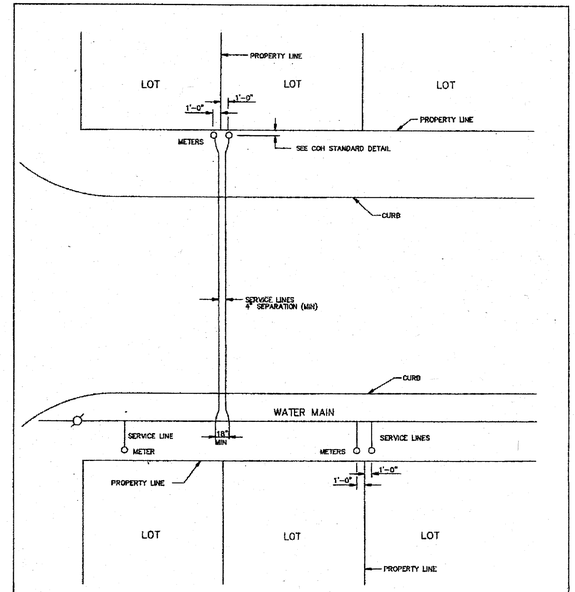

GENERAL NOTES:
1. TWO SERVICE LINES MAY BE INSTALLED IN SAME TRENCH PROVIDING 4" CLEARANCE IS MAINTAINED.
2. ONE METER PER SERVICE LINE

CITY OF HOUSTON	
DEPARTMENT OF PUBLIC WORKS AND ENGINEERING	
TYPICAL 3/4" THROUGH 2" SERVICE ARRANGEMENTS	
(NOT TO SCALE)	
APPROVED BY: CITY ENGINEER	APPROVED BY: DIRECTOR OF PUBLIC WORKS AND ENGINEERING
EFF DATE: JULY-01-2010	DWG NO: 02512-01

NOTES:
1. LOCATE FIRE HYDRANTS AT PCs OF THE INTERSECTION CURB RADIUS, 3 FEET BEHIND CURB OR PROJECTED FUTURE CURB.
2. ON OPEN-DITCH ROADWAYS, SET THE FIRE HYDRANTS WITH IN 5 FEET OF RIGHTS-OF-WAY LINES.
3. FIRE HYDRANT STEAMER NOZZLE SHALL FACE THE STREET.
4. LOCATE HYDRANT VALVE IMMEDIATELY ADJACENT TO WATER LINE.

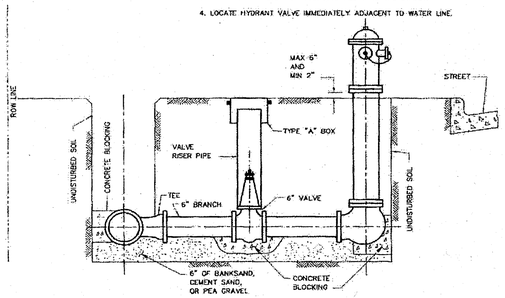

SECTION

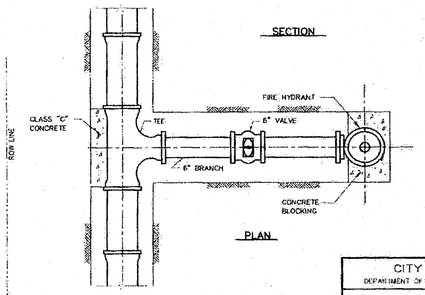

PLAN

CITY OF HOUSTON	
DEPARTMENT OF PUBLIC WORKS AND ENGINEERING	
STANDARD FIRE HYDRANT DETAIL	
(NOT TO SCALE)	
APPROVED BY: CITY ENGINEER	APPROVED BY: DIRECTOR OF PUBLIC WORKS AND ENGINEERING
EFF. DATE: JULY-01-2010	DWG NO: 02520-01

PIPE TAPPING SCHEDULE

WATER MAIN TYPE AND DIAMETER	SERVICE SIZE 3/4"	1"	1 1/2"	2"
4" CAST IRON OR DUCTILE IRON	DSS, WBSS	DSS, WBSS	DSS, WBSS	DSS, WBSS
4" ASBESTOS (EXISTING) CEMENT	WBSS	WBSS	DSS, WBSS	DSS, WBSS
4" PVC (AWWA C900)	DSS, WBSS	DSS, WBSS	DSS, WBSS	DSS, WBSS
6" AND 8" CAST IRON OR DUCTILE IRON	DSS, WBSS	DSS, WBSS	DSS, WBSS	DSS, WBSS
6" AND 8" ASBESTOS (EXISTING) CEMENT	DSS, WBSS	DSS, WBSS	DSS, WBSS	DSS, WBSS
6" AND 8" CAST IRON OR DUCTILE IRON	DSS, WDSS	DSS, WBSS	DSS, WBSS	DSS, WBSS
6" AND 8" PVC (AWWA C900)	DSS, WBSS	DSS, WBSS	DSS, WBSS	DSS, WBSS
12" CAST IRON OR DUCTILE IRON	DSS, WBSS	DSS, WBSS	DSS, WBSS	DSS, WBSS
12" ASBESTOS (EXISTING) CEMENT	DSS, WBSS	DSS, WBSS	DSS, WBSS	DSS, WBSS
12" PVC (AWWA C900)	DSS, WDSS	DSS, WBSS	DSS, WBSS	DSS, WBSS
16" AND UP CAST IRON OR DUCTILE IRON	DWBSS	DWBSS	DWBSS	DWBSS
16" AND UP ASBESTOS (EXISTING) CEMENT	DWBSS	DWBSS	DWBSS	DWBSS
16" AND UP PVC (AWWA C900)	DWBSS	DWBSS	DWBSS	DWBSS

DSS - DUAL STRAP SADDLES
WDSS – WIDE BAND STRAP SADDLES
DWBSS – DUAL WIDE BAND STRAP SADDLES

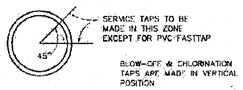

SERVICE TAPS TO BE MADE IN THIS ZONE EXCEPT FOR PVC FASTTAP

BLOW-OFF & CHLORINATION TAPS ARE MADE IN VERTICAL POSITION

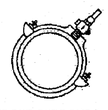

WIDE BAND SINGLE SADDLE OR DUAL SADDLES

CITY OF HOUSTON	
DEPARTMENT OF PUBLIC WORKS AND ENGINEERING	
SERVICE TAPS	
(NOT TO SCALE)	
APPROVED BY: CITY ENGINEER	APPROVED BY: DIRECTOR OF PUBLIC WORKS AND ENGINEERING
EFF. DATE: JULY-01-2010	DWG NO: 02512-02

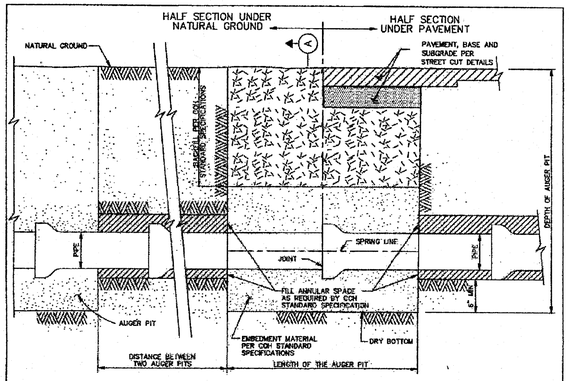

ELEVATION

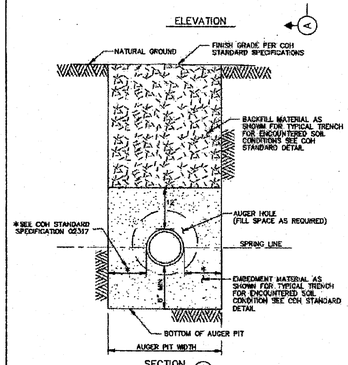

NOTE:
1. SELECT BACKFILL FOR RIGID PAVEMENT; FLEXIBLE BASE MATERIAL FOR ASPHALT PAVEMENT.

CITY OF HOUSTON	
DEPARTMENT OF PUBLIC WORKS AND ENGINEERING	
BEDDING AND BACKFILL AUGER PIT AND AUGER HOLE	
(NOT TO SCALE)	
APPROVED BY: CITY ENGINEER	APPROVED BY: DIRECTOR OF PUBLIC WORKS AND ENGINEERING
EFF DATE: JUL-01-2010	DWG NO: 02447-01

SWTP
Surface Water Transmission Program

Lockwood, Andrews & Newnam, Inc.
A LEO A DALY COMPANY
2925 Briarpark Drive Houston, TX 77042

SURVEYED BY:
KUO & ASSOCIATES, INC.
C.O.H. Field Book P-5554

STATE OF TEXAS – ALISA GRUBER – 95685 – LICENSED PROFESSIONAL ENGINEER
Lockwood, Andrews & Newnam, Inc Firm No. 2614

CITY OF HOUSTON
DEPARTMENT OF PUBLIC WORKS AND ENGINEERING

SWTP CONTRACT 74A-1

SMALL DIAMETER WATERLINE DETAILS

WBS NO.	S-000900-0109-4
DRAWING SCALE	NOT TO SCALE
CITY OF HOUSTON PM	ARTHUR C. MORRIS, P.E.
SHEET NO.	49 OF 91

ACCEPTED AND FILED – 48326 – CITY DRAWINGS RECORDS – HOUSTON TEXAS

No.	Date	Revisions

1/14/2011 11:22:01 PM jmusku

L:\1300-1037-00\Ver0-Production\Ver0-01\Drawings\Civil\Standard Details\049-Small Diameter Details.dgn

NOTES:

1. SEE TRENCH SAFETY SYSTEM SPECIFICATIONS FOR MAXIMUM ALLOWABLE SLOPES.
2. FOR WET BOTTOM EXCAVATION LIMITS OF CRUSHED STONE, EXTEND AS SHOWN.
3. KEY CONCRETE TRENCH DAM MINIMUM OF 6 INCHES INTO TRENCH BOTTOM AND WALLS.
4. TRENCH DAM MAY BE FORMED OR UNFORMED. ACTUAL SHAPE OF CONCRETE TRENCH DAM CROSS SECTION MAY BE DETERMINED BY CONTRACTOR IN FIELD, MEETING 6-INCH MINIMUM THICKNESS AND 6-INCH KEY DEPTH REQUIREMENTS.
5. TRENCH DAM SHALL BE PLACED AT LEAST 5 FT. AWAY FROM ANY PIPELINE STRUCTURE (EACH SIDE). SEE SECTION 02317 FOR OTHER REQUIREMENTS.
6. THIS PORTION OF PIPE EMBEDMENT ZONE MUST BE RECOMPACTED TO PROPER DENSITIES AFTER MOVING SUPPORT SYSTEM FORWARD.
7. USE FILTER FABRIC AS A BOND BREAKER BETWEEN CEMENT STABILIZED SAND AND PIPE.

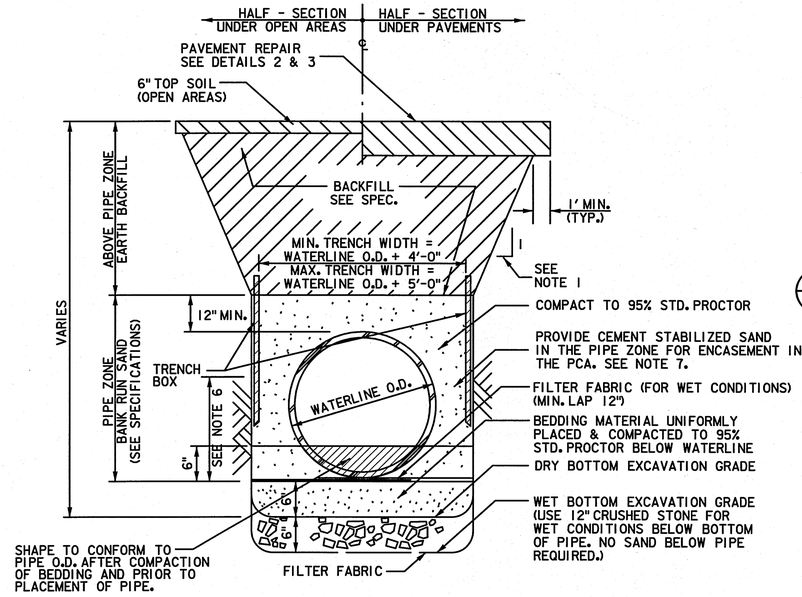

1/50 EXCAVATION & BACKFILL DETAIL (FOR LARGE DIAMETER WATER MAIN)

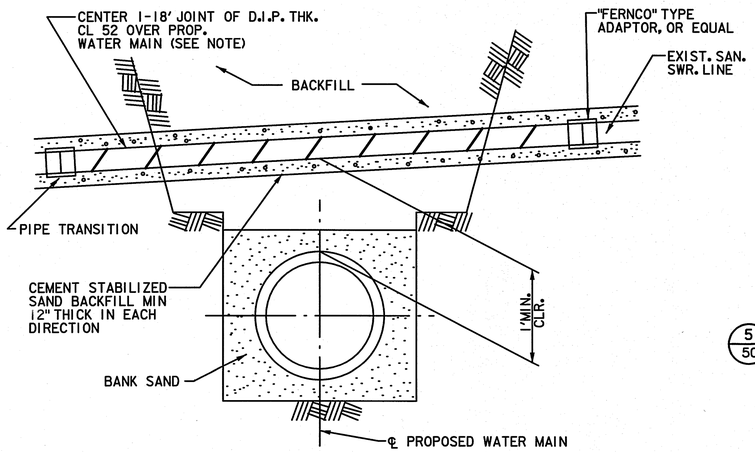

4/50 D.I.P. OVER PROPOSED WATER LINE

NTS

NOTE:
IF PERMITTED BY CITY ENGINEER, P.V.C. PIPE WITH PRESSURE RATING OF 250, DR18 MAY BE USED.

*NOTE:
DETAIL ALSO APPLIES IN CASES WHERE EXIST SAN SWR IS LOCATED BELOW PROPOSED WATER MAIN

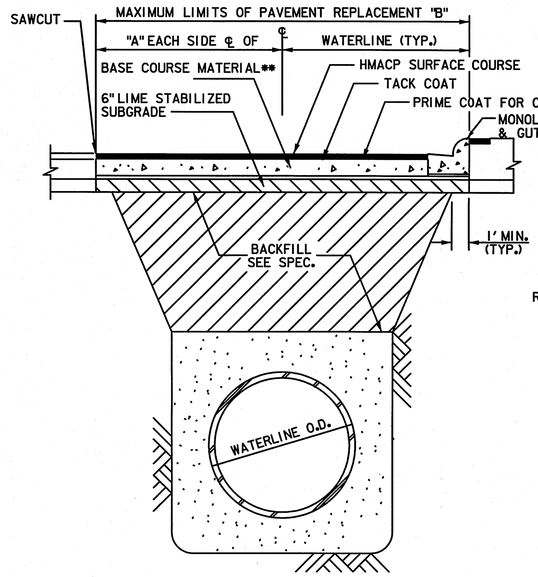

2/50 TYPICAL REPAIR OF FLEXIBLE BASE PAVEMENT

* OMIT CURB WHEN EXISTING ROADWAY DOES NOT HAVE ONE

** BASE COURSE MATERIAL SHALL CONSIST OF THE FOLLOWING OPTIONS:
1. 6" HOT MIX ASPHALTIC BASE COURSE
2. 8" STABILIZED CRUSHED CONCRETE BASE COURSE
3. SEE DETAIL 1, SHT 45 FOR PROJECT SPECIFIC INFO

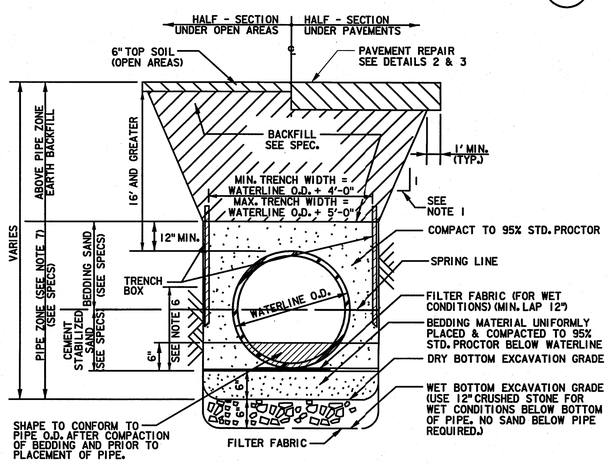

5/50 EXCAVATION & BACKFILL DETAIL (FOR LARGE DIAMETER WATER MAIN WITH HEIGHT OF EARTH COVER GREATER THAN 16')

NTS

NOTES:
1. SEE TRENCH SAFETY SYSTEM SPECIFICATIONS FOR MAXIMUM ALLOWABLE SLOPES.
2. FOR WET BOTTOM EXCAVATION LIMITS OF CRUSHED STONE, EXTEND AS SHOWN.
3. KEY CONCRETE TRENCH DAM MINIMUM OF 6 INCHES INTO TRENCH BOTTOM AND WALLS.
4. TRENCH DAM MAY BE FORMED OR UNFORMED. ACTUAL SHAPE OF CONCRETE TRENCH DAM CROSS SECTION MAY BE DETERMINED BY CONTRACTOR IN FIELD, MEETING 6-INCH MINIMUM THICKNESS AND 6-INCH KEY DEPTH REQUIREMENTS.
5. TRENCH DAM SHALL BE PLACED AT LEAST 5 FT. AWAY FROM ANY PIPELINE STRUCTURE (EACH SIDE). SEE SECTION 02317 FOR OTHER REQUIREMENTS.
6. THIS PORTION OF PIPE EMBEDMENT ZONE MUST BE RECOMPACTED TO PROPER DENSITIES AFTER MOVING SUPPORT SYSTEM FORWARD.
7. USE POLYETHYLENE WRAP AS A BOND BREAKER BETWEEN CEMENT STABILIZED SAND AND PIPE.
8. ONLY REQUIRED FOR PCCP OR BAR-WRAPPED PIPE UNLESS OTHERWISE NOTED.

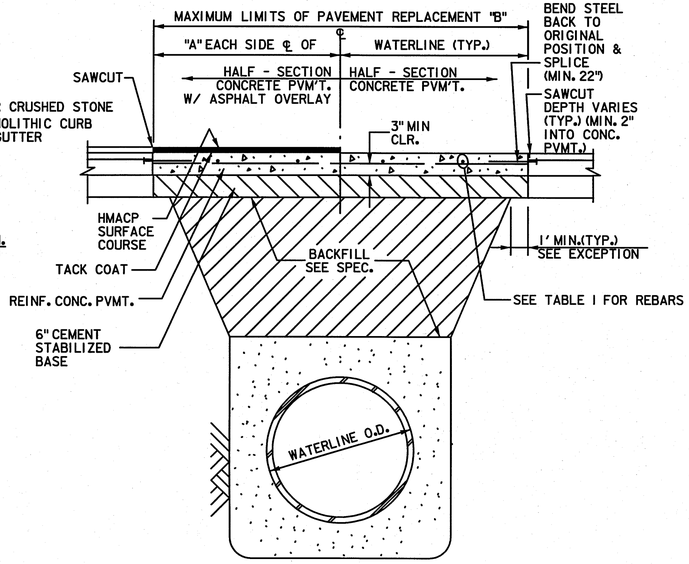

3/50 TYPICAL REPAIR OF CONCRETE PAVEMENT OR CONCRETE PAVEMENT WITH ASPHALT OVERLAY

NOTES:

1. MIN. THICKNESS 6" FOR ROADWAY WIDTH LESS THAN OR EQUAL TO 27' F/F OF CURB.
2. MIN. THICKNESS 7" FOR ROADWAY WIDTH GREATER THAN 27' F/F OF CURB.
3. MIN. THICKNESS 8" FOR MAJOR THOROUGHFARES.
4. REINFORCING STEEL ARE SHOWN ON TABLE I & II.
5. SEAL CONCRETE JOINTS BEFORE APPLYING ASPHALT OVERLAY

TABLE I : REINFORCING STEEL INFORMATION FOR VARIOUS PAVEMENT THICKNESS (F) WITH L = EXPANSION JOINT SPACING = 80 FT. FC' = 3000 PSI AND FY = 60,000 PSI

F (IN).	REBAR SIZE & SPACING	MIN LENGTH OF LAP (IN.)
6.	A) #3 AT 11 IN., B) #4 AT 20 IN.	16 & 22
7.	#4 AT 17 IN.	22
8.	A) #5 AT 23 IN., B) #4 AT 15 IN.	22
9.	A) #5 AT 20 IN., B) #4 AT 13 IN.	22
10.	A) #4 AT 12 IN., B) #5 AT 18 IN.	22 & 27
11.	A) #4 AT 10 IN., B) #5 AT 16 IN.	22 & 27
12.	A) #4 AT 10 IN., B) #5 AT 15 IN.	22 & 27

DOWELS AT EXPANSION JOINTS FOR REINFORCED PAVEMENT : CHANGE THE DOWELS SIZES & SPACING AT EXPANSION JOINTS FOR REINFORCED PAVEMENTS FROM ¾IN. DIAMETER, 10 IN. LONG & SPACED AT 22 IN. ON CENTERS TO THE FOLLOWING : (SEE TABLE II BELOW)

TABLE II : DOWEL SIZES & SPACINGS AT EXPANSION JOINTS FOR VARIOUS PAVEMENT THICKNESS.

PAVEMENT THICKNESS (IN.)	DOWEL SIZES & SPACING		
	DIAMETER (IN.)	LENGTH (IN.)	SPACING (IN.)
6	3/4	18	12
7	7/8	18	12
8	1	18	12
9	1 - 1/8	20	12
10	1 - 1/4	20	12
11	1 - 1/4	20	12
12	1 - 1/4	20	12

MAXIMUM PAYMENT LIMITS OF PAVEMENT REPLACEMENT

WATERLINE I.D. (In.)	DIMENSION "A" (ft.)	DIMENSION "B" (ft.)
24	5.0	10
30	5.5	11
36	6.0	12
42	6.5	13
48	7.0	14
54	7.5	15
60	8.0	16
66	8.0	16
72	8.5	17
78	8.5	17
84	9.0	18
96	9.0	18

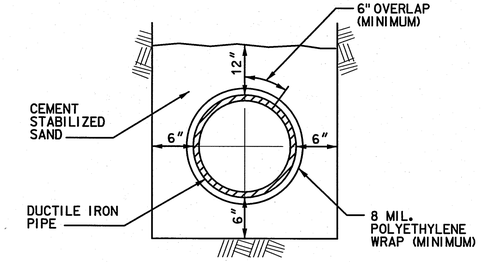

6/50 EMBEDMENT AND CORROSION PROTECTION FOR SANITARY SEWER DUCTILE IRON PIPE

N.T.S.

NOTES:

1. FOLLOWING EXCAVATION OF TRENCH, PLACE A 6" LAYER OF CEMENT STAB. SAND AT BOTTOM OF TRENCH. LAY POLYETHYLENE WRAP IN TRENCH, AND LAY PIPE ON TOP OF WRAP. FOLD WRAP AROUND PIPE WITH A 6" OVERLAP (MIN.) AND TIE AROUND PIPE WITH HEAVY BINDER TWINE, OR EQUAL, ON 6" CENTERS. PROVIDE A 12" OVERLAP (MIN.) AND TIE WITH HEAVY BINDER TWINE END LAPS. PLACE ADDITIONAL CEMENT SAND UP TO 12" ABOVE
2. ALL DUCTILE IRON PIPE SHALL HAVE A POLYETHYLENE "WRAP" OF 8 MIL. THICKNESS (MINIMUM) EXCEPT AS NOTED BELOW.
3. WHERE PIPE IS PLACED IN AN AUGER OR TUNNEL OR IN A CASING, PIPE IS TO HAVE A DOUBLE WRAP OF 16 MIL POLYEHTYLENE AND SHALL BE BONDED ON 12" CENTERS WITH ½" STAINLESS STEEL BANDS. END LAPS TO BE AS SPECIFIED FOR TRENCH SECTIONS.

SWTP
Surface Water Transmission Program

Lockwood, Andrews & Newnam, Inc.
A LEO A DALY COMPANY
2925 Briarpark Drive Houston, TX 77042

SURVEYED BY:
KUO & ASSOCIATES, INC.
C.O.H. Field Book P-5554

STATE OF TEXAS
ALISA GRUBER
95685
LICENSED PROFESSIONAL ENGINEER
1-3-11
Lockwood, Andrews & Newnam, Inc Firm No. 2614

CITY OF HOUSTON
DEPARTMENT OF PUBLIC WORKS AND ENGINEERING

SWTP CONTRACT 74A-1

EXCAVATION, BEDDING, BACKFILL & PAVEMENT REPAIR DETAILS

WBS NO. S-000900-0109-4
DRAWING SCALE: NOT TO SCALE
CITY OF HOUSTON PM: ARTHUR C. MORRIS, P.E.
SHEET NO. 50 OF 91

ACCEPTED AND FILED
48326
CITY OF HOUSTON TEXAS

Revisions: No. Date Apps

L:\1350-10337-004\4-0-Production\4-01-Drawings\Civil\Standard Details\4050-Exc Bed Backfill & Pav Repair.dgn
12/28/2010 4:25:28 PM jmusku

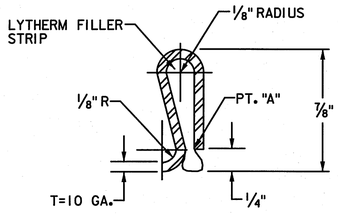

NOTES:

1. STEEL BONDING CLIP:
   MATERIAL SPECIFICATION ----- ASTM A366 (COMMERCIAL QUALITY)
   CUT LENGTH ---------- 2 1/2" ±1/16"
   WIDTH---------- 1 1/4" ±1/16"
2. LYTHERM FILLER STRIP TO BE 1" x 1 1/2" WIDE TO OVERLAP SIDES OF CLIP.
3. CRIMP JUMPER OVER FILLER AT "A" TO COMPRESS FILLER CLOSE AT PT. "A" AS MUCH AS POSSIBLE WITHOUT CUTTING FILLER PAD.
4. BONDING CLIP TO BE INSTALLED IN THE INTERIOR OF PIPE FOR DIAMETERS LARGER THAN 30". FOR 30" AND SMALLER, BONDING CLIP IS TO BE INSTALLED ON EXTERIOR OF PIPE.
5. ARRANGE BONDING CLIPS ON TOP OF PIPE, 12 INCHES APART.

NOTE: THREE REQUIRED PER JOINT (TYPICAL).

1/51 STEEL BONDING CLIP DETAIL

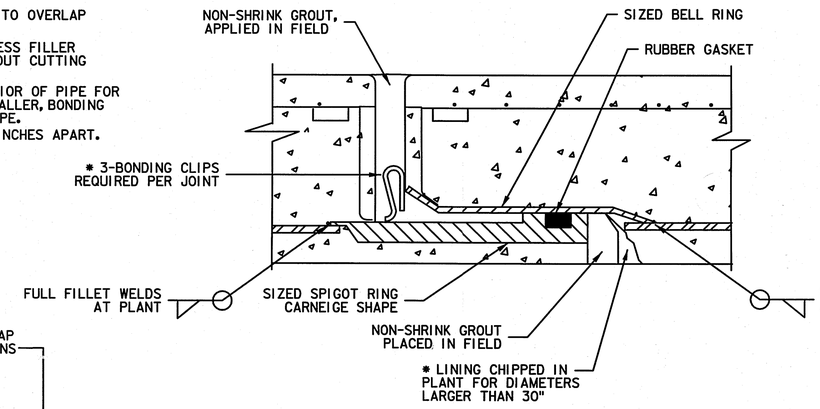

2/51 BONDED JOINT – EMBEDDED CYLINDER PIPE

* PLACE BONDING CLIPS IN INTERIOR OF PIPE FOR DIAMETERS LARGER THAN 30"

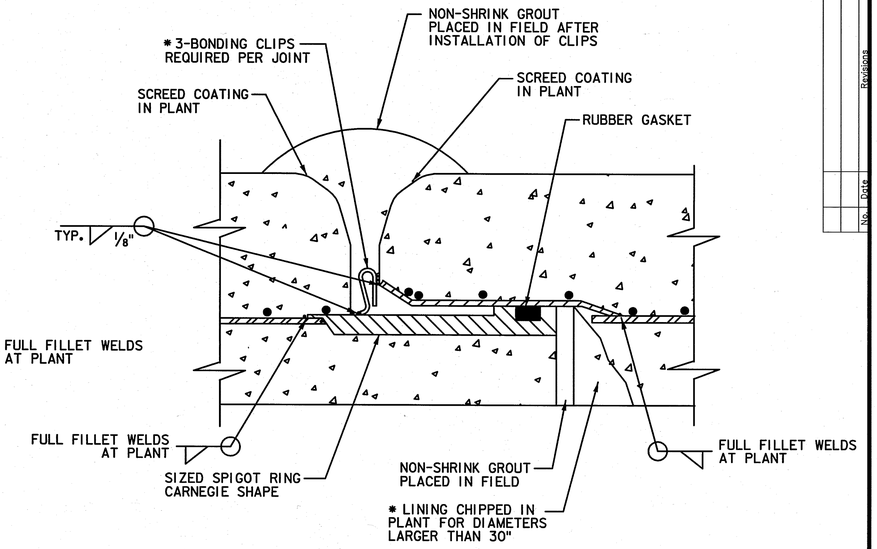

3/51 BONDED JOINT – LINED CYLINDER PIPE

* PLACE BONDING CLIPS IN INTERIOR OF PIPE FOR DIAMETERS LARGER THAN 30"

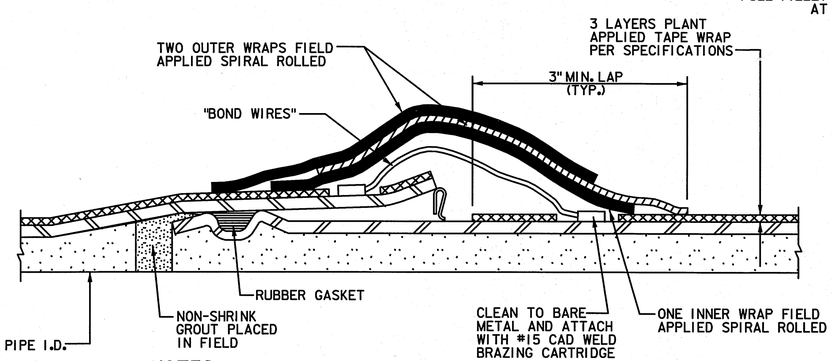

NOTES:

1. STEEL BONDING CLIP IS OPTIONAL TO BOND WIRE.
2. A MINIMUM OF TWO BOND WIRES OR THREE BONDING CLIPS ARE REQUIRED FOR RUBBER GASKETED STEEL PIPE. CLIPS ARE TO BE PROVIDED IN ACCORDANCE WITH DETAILS.

4/51 O-RING STEEL PIPE JOINT DETAIL

(CEMENT MORTAR LINED & TAPE WRAPPED SHOWN. EPOXY LINING SIMILAR)

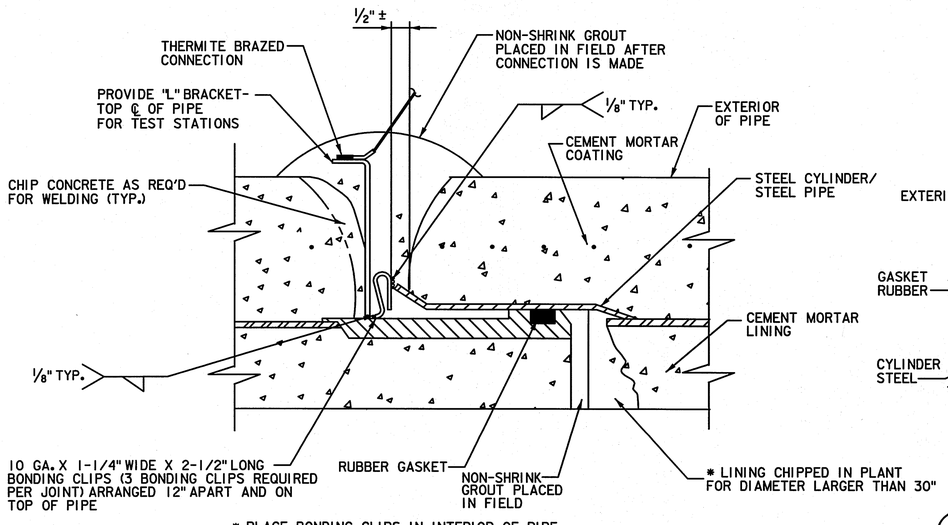

* PLACE BONDING CLIPS IN INTERIOR OF PIPE FOR DIAMETER LARGER THAN 30"

5/51 BONDED JOINT – MORTAR COATED STEEL PIPE

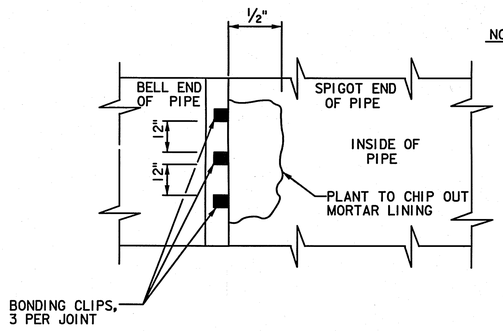

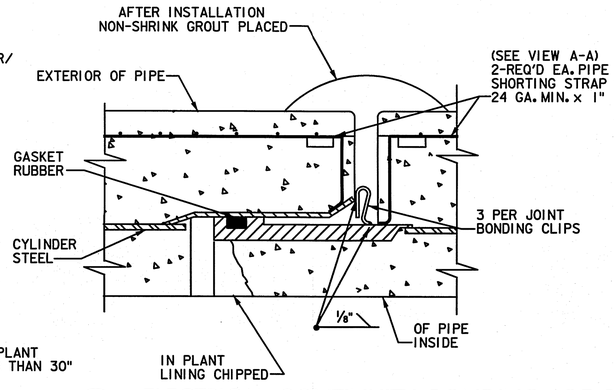

6/51 ELECTRICAL CONTINUITY BONDING OF PCCP

* SEE NOTE 4 DETAIL 2 FOR EXCEPTION

NOTE: COATING NOT SHOWN

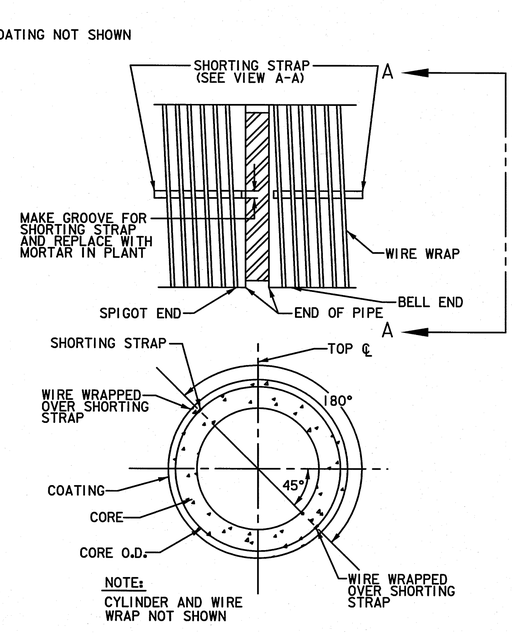

NOTE:
CYLINDER AND WIRE WRAP NOT SHOWN

VIEW A-A

NOTE:
PLACE BONDING CLIPS IN INTERIOR JOINT RECESS AS SHOWN. WELD CLIPS TO BELL AND SPIGOT USING 1/8" FILLET WELD. REMOVE SLAG FROM WELD AND FILL RECESS WITH CEMENT MORTAR, COVERING ALL EXPOSED STEEL.

SWTP
Surface Water Transmission Program

Lockwood, Andrews & Newnam, Inc.
A LEO A DALY COMPANY
2925 Briarpark Drive Houston, TX 77042

SURVEYED BY:
KUO & ASSOCIATES, INC.
C.O.H. Field Book P-5554

1-3-11
STATE OF TEXAS
ALISA GRUBER
95685
LICENSED PROFESSIONAL ENGINEER
Lockwood, Andrews & Newnam, Inc. Firm No. 2614

CITY OF HOUSTON
DEPARTMENT OF PUBLIC WORKS AND ENGINEERING

SWTP CONTRACT 74A-1

CATHODIC PROTECTION DETAILS FOR JOINT BONDING SHEET 1 OF 2

WBS NO.	S-000900-0109-4
DRAWING SCALE	NOT TO SCALE
CITY OF HOUSTON PM	ARTHUR C. MORRIS, P.E.
SHEET NO.	51 OF 91

ADOPTED AND FILED
48326
CITY DRAWING NUMBER
HOUSTON, TEXAS

Revisions: No. Date

12/28/2010
4:25:29 PM
jmusiku
L:\130-10337-004\4-Production\4-01-Drawings\Civil\Standard Details\851-01-CPTP-851st01.dgn

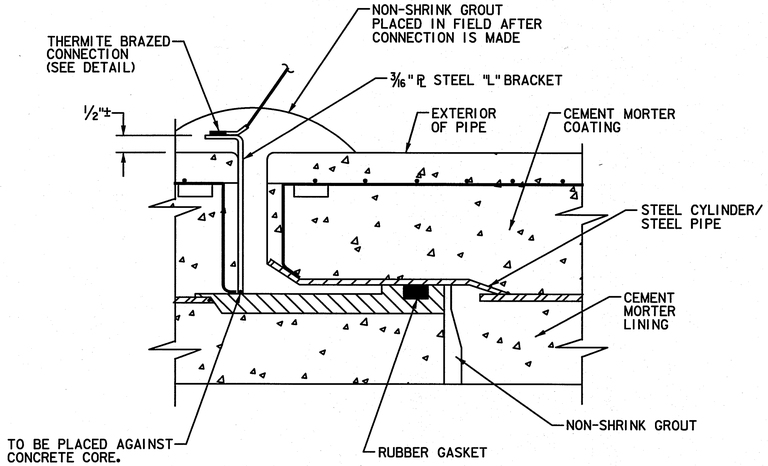

1/52 TEST LEAD CONNECTION DETAIL

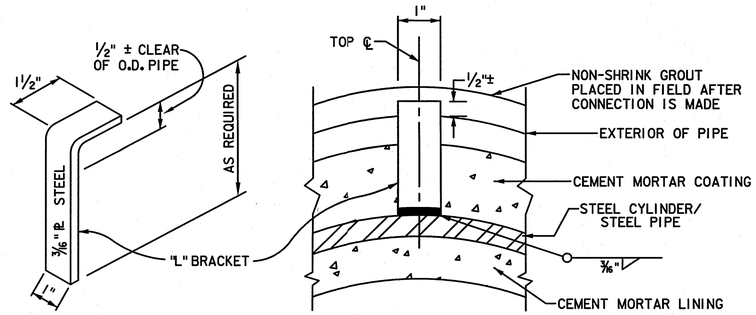

SPIG VIEW

2/52 "L" BRACKET DETAIL

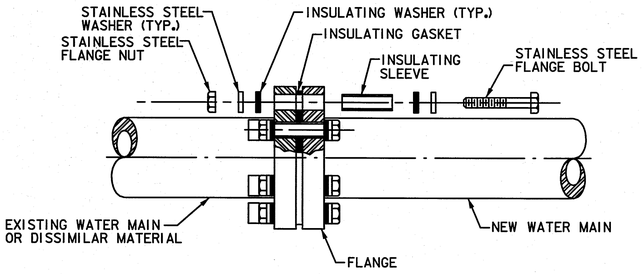

3/52 ISOLATION FLANGE

NOTES:

1. DETAILS SHOW BONDING ARRANGEMENTS ONLY. SEE JOINT DETAIL FOR PIPE JOINT REQUIREMENTS.

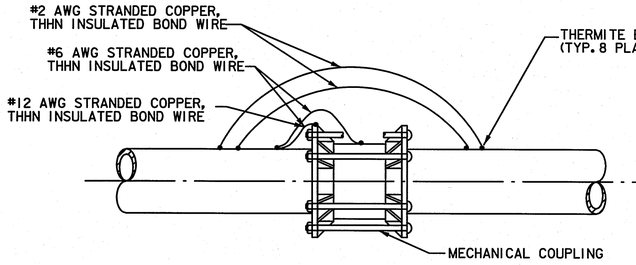

6/52 MECHANICAL COUPLING BOND DETAIL

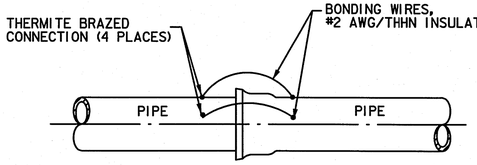

NOTE: BOND WIRES SHALL BE PLACED A MINIMUM OF 6" APART.

4/52 BELL & SPIGOT BONDING ARRANGEMENT

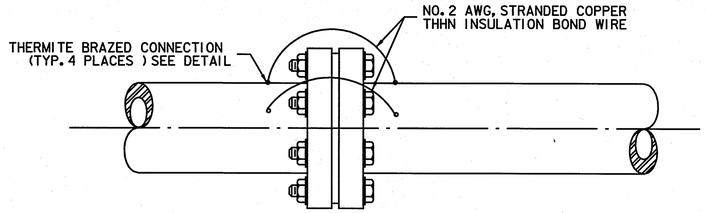

8/52 ELECTRICAL BONDING ACROSS FLANGE

NOTE: BOND WIRES SHALL BE PLACED A MINIMUM OF 6" APART.

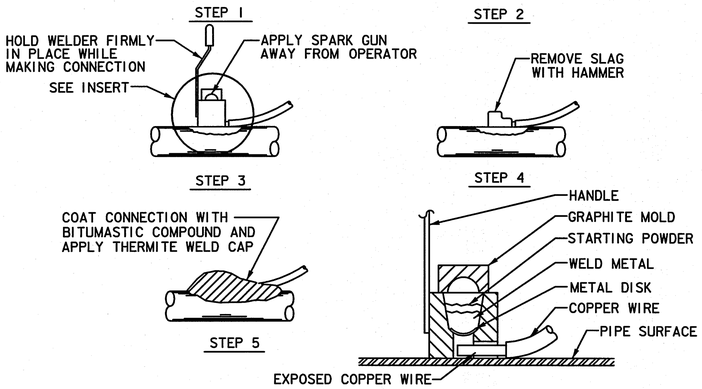

INSERT

NOTES:

1. WHEN #14 SOLID TO #10 SOLID WIRE IS USED, IT WILL BE NECESSARY TO INSTALL A COPPER SLEEVE OF ADEQUATE SIZE OVER BARE SECTION OF WIRE BEFORE CONNECTION IS ATTEMPTED.
2. THERMITE WELD PROCEDURES SIMILAR FOR "L" BRACKETS.
3. REPAIR ALL DAMAGE TO COATING AND LINING IN ACCORDANCE WITH MFG. RECOMMENDATIONS.

5/52 THERMITE BRAZED CONNECTION DETAIL

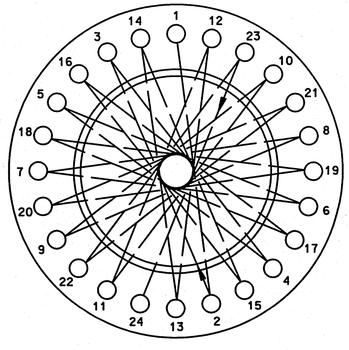

FLANGE BOLT TIGHTENING SEQUENCE

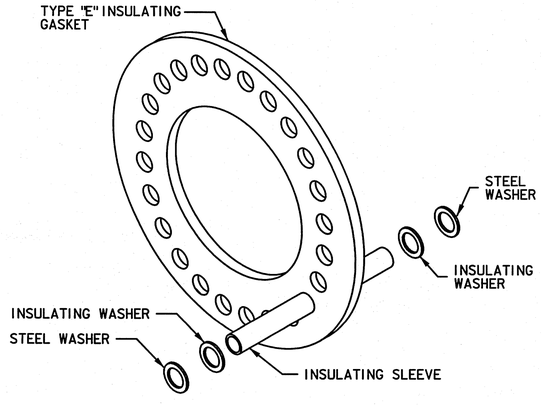

INSULATING SLEEVE AND ACCESSORIES

7/52 ISOLATION FLANGE ASSEMBLY

SWTP Surface Water Transmission Program

Lockwood, Andrews & Newnam, Inc.
A LEO A DALY COMPANY
2925 Briarpark Drive Houston, TX 77042

SURVEYED BY:
KUO & ASSOCIATES, INC.
C.O.H. Field Book P-5554

STATE OF TEXAS
ALISA GRUBER
95685
LICENSED PROFESSIONAL ENGINEER
Lockwood, Andrews & Newnam, Inc Firm No. 2614

CITY OF HOUSTON
DEPARTMENT OF PUBLIC WORKS AND ENGINEERING

SWTP CONTRACT 74A-1

CATHODIC PROTECTION DETAILS FOR JOINT BONDING SHEET 2 OF 2

WBS NO. S-000900-0109-4
DRAWING SCALE NOT TO SCALE
CITY OF HOUSTON PM ARTHUR C. MORRIS, P.E.
SHEET NO. 52 OF 91

ACCEPTED AND FILED 48326 CITY DRAWING NUMBER HOUSTON, TEXAS

No. Date Revisions App'd

12/28/2010 4:25:30 PM jmusiku

L:\1130-10331-004\4-0-Production\4-01-Drawings\Civil\Standard Details\605s-2h1-12TDF-BSNDet1.dgn

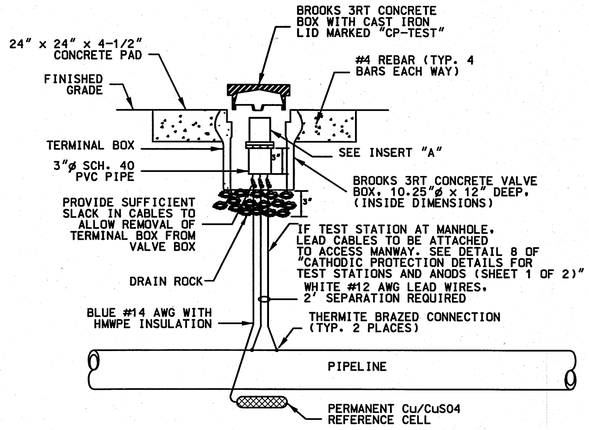

1/53 FLUSH MOUNTED POTENTIAL TEST STATION

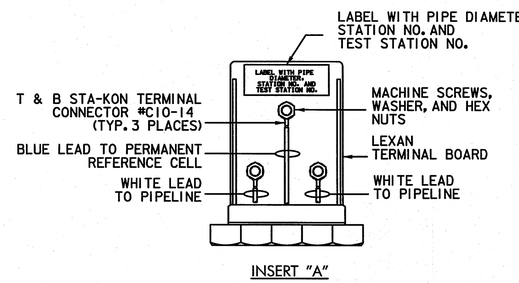

INSERT "A"

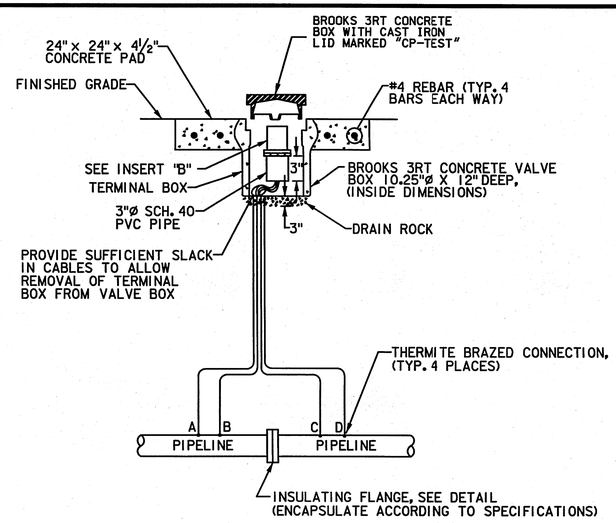

2/53 FLUSH MOUNTED FLANGE ISOLATION TEST STATION

WIRE CODING:
* WIRES A & B ARE BLACK, WIRES C & D ARE WHITE
* WIRES A & D ARE #12 AWG TW SOLID SINGLE CONDUCTOR WIRE
* WIRES B & C ARE #6 AWG TW STRANDED SINGLE CONDUCTOR
* BLACK WIRES ATTACH TO UNPROTECTED OR EXISTING PIPE
* WHITE WIRES ATTACH TO PROTECTED OR NEW PIPE

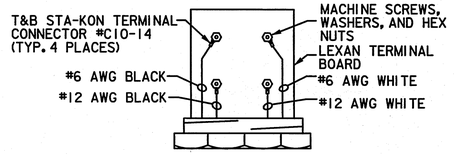

INSERT "B"

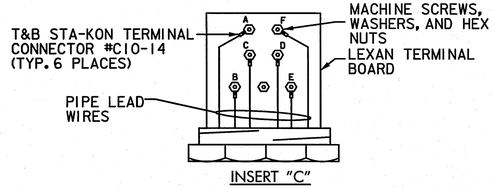

INSERT "C"

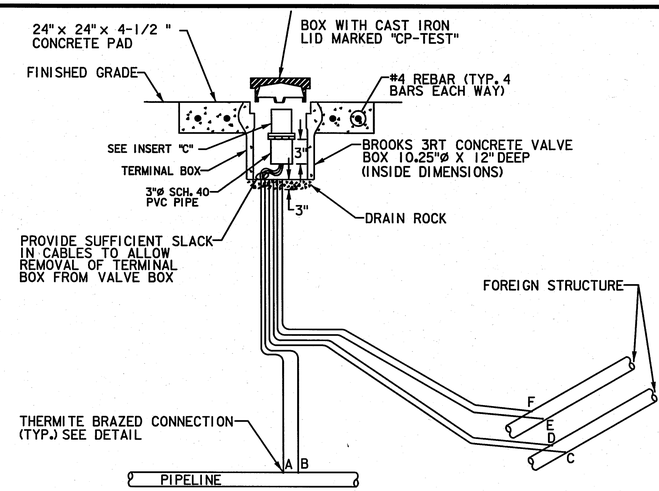

3/53 FLUSH MOUNTED FOREIGN LINE TEST STATION

WIRING CODE:
* WIRES A & B ARE WHITE
* WIRES C, D, E & F ARE RED
* WIRES A, C, F ARE #12 AWG TW SOLID COPPER WIRE
* WIRES B, D, E ARE #8 AWG TW STRANDED COPPER WIRE
* RED WIRES ATTACH TO FOREIGN OWNED PIPE
* WHITE WIRES ATTACH TO NEW PIPE

NOTES:
1. TEST STATION SHALL BE MOUNTED DIRECTLY ABOVE THE NEW WATER LINE.
2. FOR MORE THAN TWO (2) FOREIGN LINES, INSTALL A COTTBOX TYPE TEST STATION. (UP TO 20 TERMINALS)

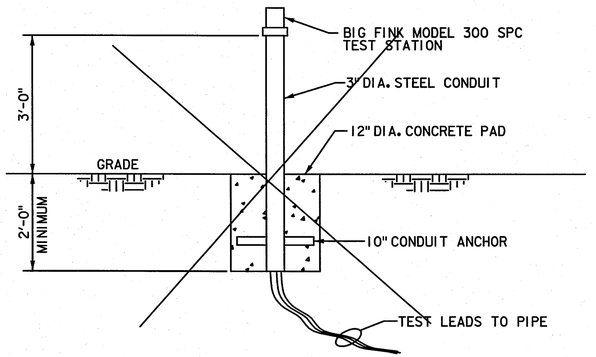

4/53 POLE MOUNTED TEST STATION ASSEMBLY

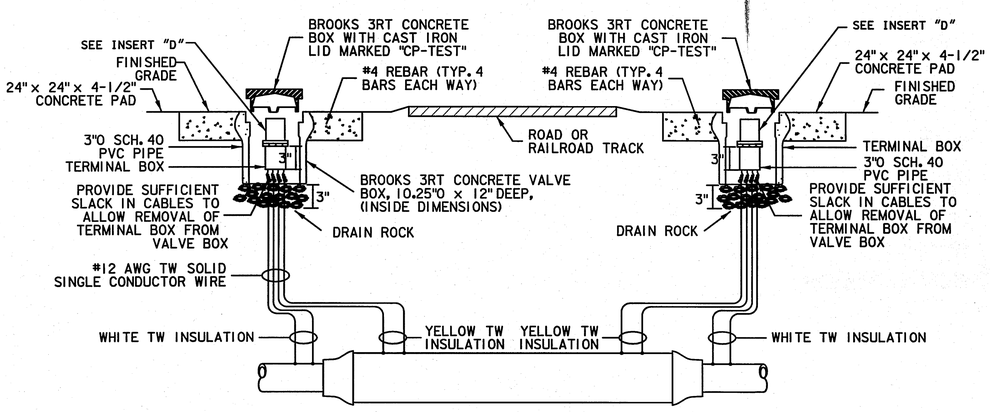

5/53 FLUSH MOUNTED CASED CROSSING TEST STATION

TEST STATION	STATION NO.	SEGMENT	TYPE OF TEST STATION	STRUCTURE (S)
1	2+08		FLUSH MOUNTED POTENTIAL TEST STATION	
2	3+10		FLUSH MOUNTED FOREIGN LINE TEST STATION	
3	13+72		FLUSH MOUNTED POTENTIAL TEST STATION	
4	26+82		FLUSH MOUNTED POTENTIAL TEST STATION	
5	34+35		FLUSH MOUNTED POTENTIAL TEST STATION	
6	47+42		FLUSH MOUNTED CASED CROSSING TEST STATION	
7	48+72		FLUSH MOUNTED CASED CROSSING TEST STATION	
8	52+10		FLUSH MOUNTED CASED CROSSING TEST STATION	
9	55+00		FLUSH MOUNTED CASED CROSSING TEST STATION	
10	66+22		FLUSH MOUNTED CASED CROSSING AND FOREIGN LINE TEST STATION	
11	67+32		FLUSH MOUNTED CASED CROSSING TEST STATION	
12	69+75		FLUSH MOUNTED CASED CROSSING TEST STATION	
13	70+09		FLUSH MOUNTED CASED CROSSING AND FOREIGN LINE TEST STATION	
14	70+65		FLUSH MOUNTED FLANGE ISOLATION AND ANODE TEST STATION W/ 4-32 LB, MANESIUM ANODE	
15	73+83		FLUSH MOUNTED FOREIGN LINE TEST STATION	
16	75+22		FLUSH MOUNTED FLANGE ISOLATION AND ANODE TEST STATION W/ 4-32 LB, MANESIUM ANODE	

SWTP Surface Water Transmission Program

Lockwood, Andrews & Newnam, Inc.
A LEO A DALY COMPANY
2925 Briarpark Drive Houston, TX 77042

SURVEYED BY:
KUO & ASSOCIATES, INC.
C.O.H. Field Book P-5554

STATE OF TEXAS
ALISA GRUBER
95685
LICENSED PROFESSIONAL ENGINEER
Lockwood, Andrews & Newnam, Inc. Firm No. 2614

CITY OF HOUSTON
DEPARTMENT OF PUBLIC WORKS AND ENGINEERING

SWTP CONTRACT 74A-1

CATHODIC PROTECTION DETAILS FOR TEST STATIONS

WBS NO. S-000900-0109-4
DRAWING SCALE: NOT TO SCALE
CITY OF HOUSTON PM: ARTHUR C. MORRIS, P.E.
SHEET NO. 53 OF 91

ACCEPTED AND FILED
46926
CITY SECRETARY
HOUSTON, TEXAS

No.	Date	Revisions	Appr.

7/6/2011 1:36:02 PM jmusku
L:\1130-10337-004\4-0 Product\en\4-01-Drawings\Civil\1\Standard Detail\90552-01-CP15.dgn

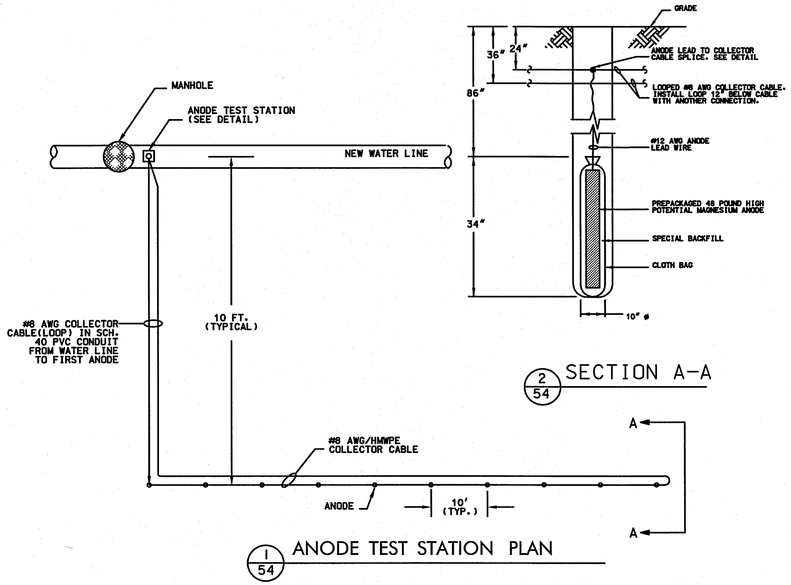

1/54 ANODE TEST STATION PLAN

2/54 SECTION A-A

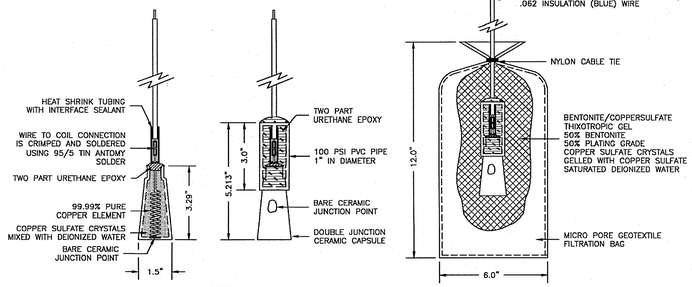

3/54 Cu/CuSO4 PERMACELL PLUS PERMANENT REFERENCE CELL

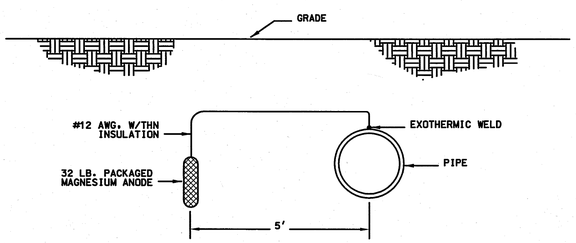

4/54 DIRECT CONNECT ANODE INSTALLATION DETAIL

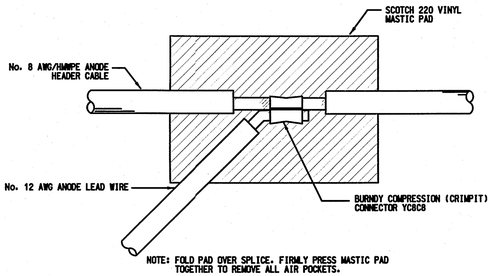

NOTE: FOLD PAD OVER SPLICE. FIRMLY PRESS MASTIC PAD TOGETHER TO REMOVE ALL AIR POCKETS.

7/54 SPLICE DETAIL

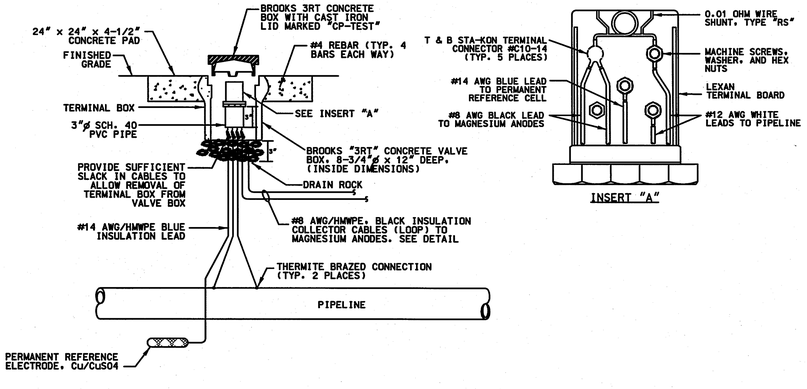

5/54 ANODE TEST STATION PROFILE

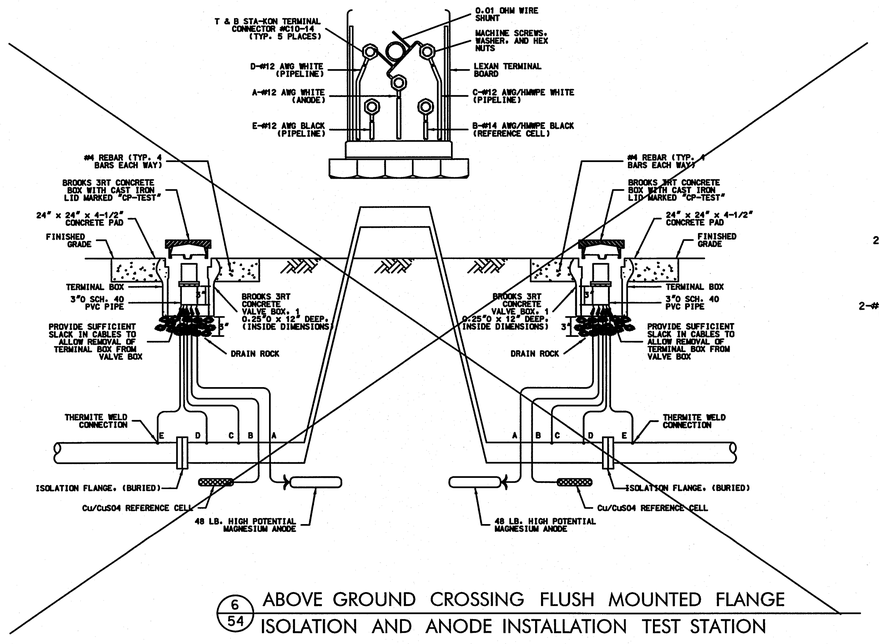

6/54 ABOVE GROUND CROSSING FLUSH MOUNTED FLANGE ISOLATION AND ANODE INSTALLATION TEST STATION

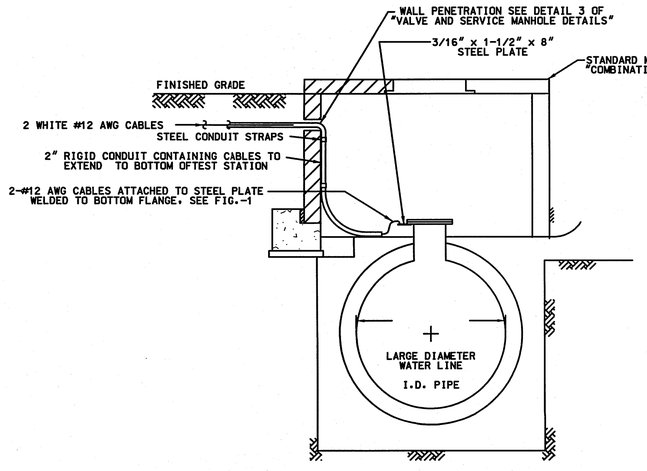

8/54 TEST STATION INSTALLATION IN MANHOLE

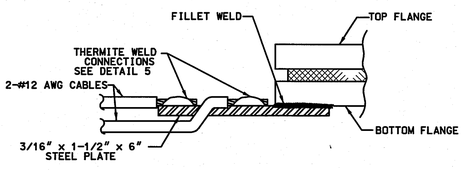

FIG-1

NOTE:
STEEL PLATE, CABLES AND CONDUIT TO BE PLACED OPPOSITE OF STAIRS.

SWTP
Surface Water Transmission Program

Lockwood, Andrews & Newnam, Inc.
A LEO A DALY COMPANY
2925 Briarpark Drive Houston, TX 77042

SURVEYED BY:
KUO & ASSOCIATES, INC.
C.O.H. Field Book P-5554

STATE OF TEXAS
ALISA GRUBER
95685
LICENSED PROFESSIONAL ENGINEER
1-3-11
Lockwood, Andrews & Newnam, Inc. Firm No. 2614

CITY OF HOUSTON
DEPARTMENT OF PUBLIC WORKS AND ENGINEERING

SWTP CONTRACT 74A-1

CATHODIC PROTECTION DETAILS FOR TEST STATIONS AND ANODES (SHEET 1 OF 2)

WBS NO. S-000900-0109-4	
DRAWING SCALE	
NOT TO SCALE	
CITY OF HOUSTON PM	
ARTHUR C. MORRIS, P.E.	
SHEET NO. 54 OF 91	

PUBLIC WORKS AND ENGINEERING ACCEPTED AND FILED 48326 CITY DRAWING NUMBER HOUSTON, TEXAS

No.	Date	Revisions	App.

12/29/2010 4:25:32 PM jmusku

L:\130-10337-004\4-0-Production\4-01-Drawings\Civil\Standard Details\SS4-01-CPTSA.dgn

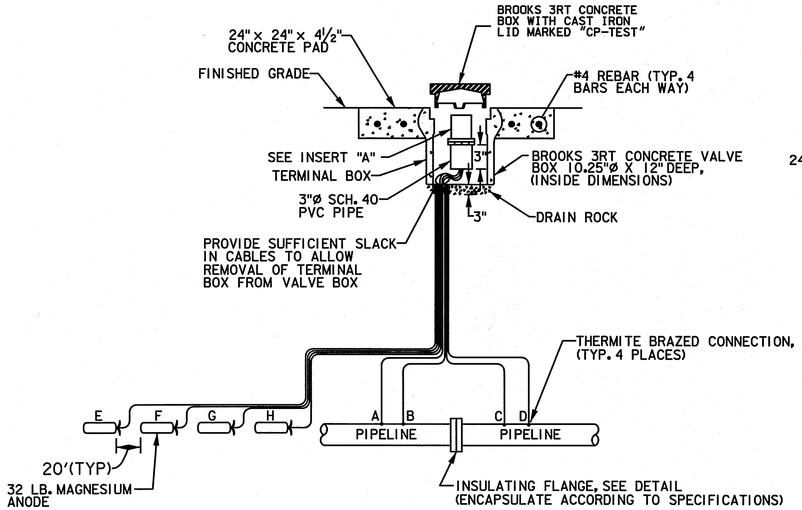

1/55 FLUSH MOUNTED FLANGE ISOLATION AND ANODE TEST STATION

WIRE CODING:
* WIRES A & B ARE BLACK, WIRES C & D ARE WHITE
* WIRES A & D ARE #12 AWG TW SOLID SINGLE CONDUCTOR WIRE
* WIRES B & C ARE #6 AWG TW STRANDED SINGLE CONDUCTOR
* BLACK WIRES ATTACH TO UNPROTECTED OR EXISTING PIPE
* WHITE WIRES ATTACH TO PROTECTED OR NEW PIPE
* WIRES E, F, G, & H ARE BLACK #12 AWG ANODE LEAD WIRE TO 32 LB. MAGNESIUM ANODES

INSERT "A"

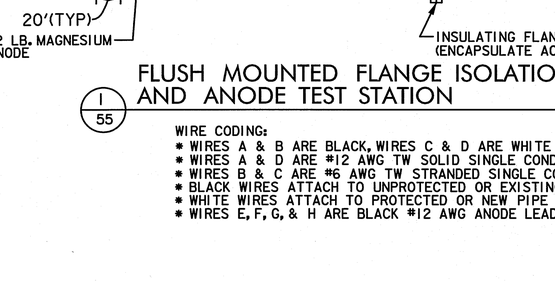

2/55 FLUSH MOUNTED FLANGE ISOLATION AND ANODE TEST STATION PLAN

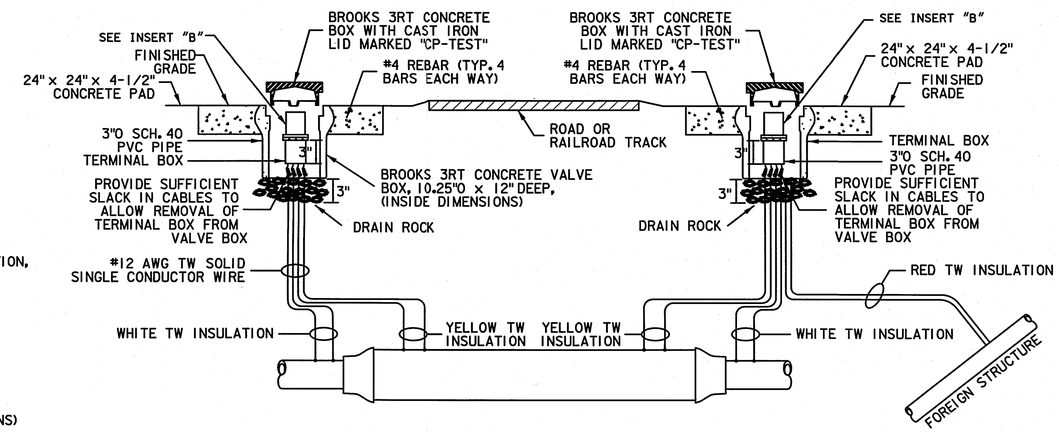

3/55 FLUSH MOUNTED CASED CROSSING AND FOREIGN LINE TEST STATION

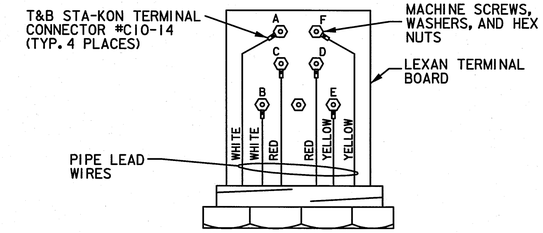

INSERT "B"

4/55 FLUSH MOUNTED POTENTIAL AND ANODE TEST STATION

WIRE CODING:
* WIRES A & B ARE WHITE #12 AWG TW SOLID SINGLE CONDUCTOR WIRE TO NEW PIPE.
* WIRES C, D, E, & F ARE BLACK #12 AWG ANODE LEAD WIRE TO 32 LB. MAGNESIUM ANODES.

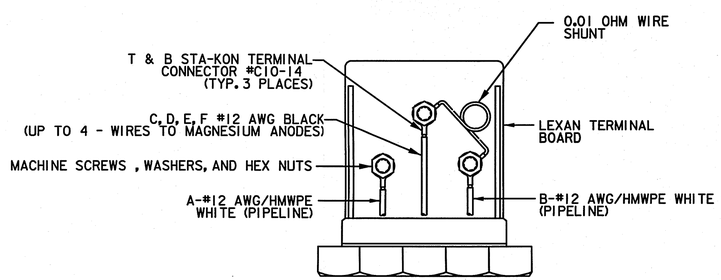

INSERT "B"

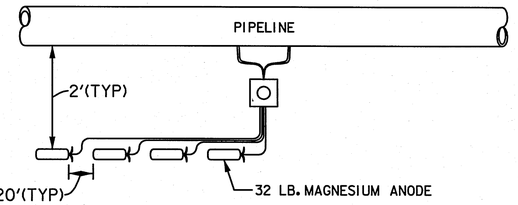

5/55 FLUSH MOUNTED POTENTIAL AND ANODE TEST STATION PLAN

SWTP
Surface Water Transmission Program

Lockwood, Andrews & Newnam, Inc.
A LEO A DALY COMPANY
2925 Briarpark Drive Houston, TX 77042

STATE OF TEXAS — ALISA GRUBER — 95685 — LICENSED PROFESSIONAL ENGINEER
Lockwood, Andrews & Newnam, Inc. Firm No. 2614

SURVEYED BY:
KUO & ASSOCIATES, INC.
C.O.H. Field Book P-5554

CITY OF HOUSTON
DEPARTMENT OF PUBLIC WORKS AND ENGINEERING

SWTP CONTRACT 74A-1

CATHODIC PROTECTION DETAILS FOR TEST STATIONS AND ANODES (SHEET 2 OF 2)

WBS NO.	S-000900-0109-4
DRAWING SCALE	NOT TO SCALE
CITY OF HOUSTON PM	ARTHUR C. MORRIS, P.E.
SHEET NO.	55 OF 91

ACCEPTED AND FILED 48326 CITY DRAWING NO. HOUSTON, TEXAS

No.	Date	Revisions	App.

jmusku
4:29:32 PM
12/28/2010
L:\1350-10337-0044-0-Production\04-01-Drawings\Civil\Standard Details\05-01-FLUSMOUNTED.dgn

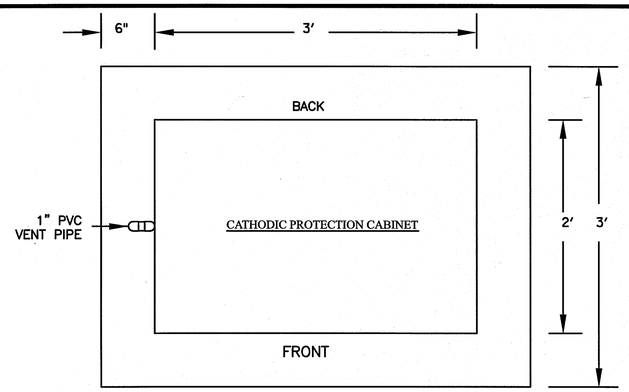

PLAN VIEW OF CONCRETE PAD WITH CATHODIC PROTECTION CABINET

5/56 NO SCALE

RECTIFIER INFORMATION

PIPE MATERIAL	RECTIFIER NO.	STATION NO.	SIZE OF RECTIFIERS	NUMBER OF ANODES	ANODE SIZE	ANODE WELL DEPTH
DIELECTRIC COATED STEEL PIPE	1	40+50	10 V/ 10 A	6	TA-2	160 FT
CEMENT MORTAR COATED STEEL PIPE	1	26+82	25 V/ 25 A	10	TA-3	200 FT
	2	58+00	25 V/ 25 A	10	TA-3	200 FT
PRESTRESSED CONCRETE CYLINDER PIPE	1	24+00	25 V/ 25 A	10	TA-3	200 FT
	2	40+50	25 V/ 25 A	10	TA-3	200 FT
	3	58+00	25 V/ 25 A	10	TA-3	200 FT

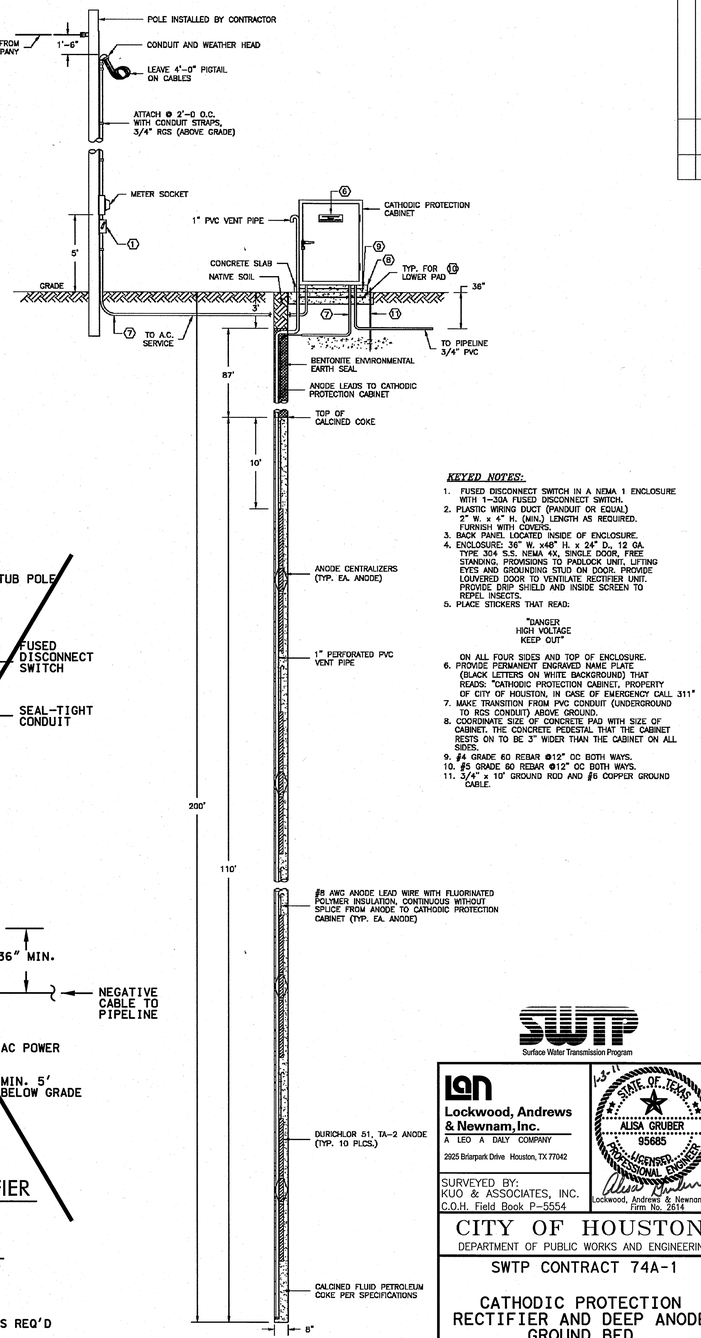

KEYED NOTES:

1. FUSED DISCONNECT SWITCH IN A NEMA 1 ENCLOSURE WITH 1-30A FUSED DISCONNECT SWITCH.
2. PLASTIC WIRING DUCT (PANDUIT OR EQUAL) 2" W. x 4" H. (MIN.) LENGTH AS REQUIRED. FURNISH WITH COVERS.
3. BACK PANEL LOCATED INSIDE OF ENCLOSURE.
4. ENCLOSURE: 36" W. x48" H. x 24" D., 12 GA. TYPE 304 S.S. NEMA 4X, SINGLE DOOR, FREE STANDING. PROVISIONS TO PADLOCK UNIT. LIFTING EYES AND GROUNDING STUD ON DOOR. PROVIDE LOUVERED DOOR TO VENTILATE RECTIFIER UNIT. PROVIDE DRIP SHIELD AND INSIDE SCREEN TO REPEL INSECTS.
5. PLACE STICKERS THAT READ:

   "DANGER
   HIGH VOLTAGE
   KEEP OUT"

   ON ALL FOUR SIDES AND TOP OF ENCLOSURE.
6. PROVIDE PERMANENT ENGRAVED NAME PLATE (BLACK LETTERS ON WHITE BACKGROUND) THAT READS: "CATHODIC PROTECTION CABINET, PROPERTY OF CITY OF HOUSTON, IN CASE OF EMERGENCY CALL 311"
7. MAKE TRANSITION FROM PVC CONDUIT (UNDERGROUND TO RGS CONDUIT) ABOVE GROUND.
8. COORDINATE SIZE OF CONCRETE PAD WITH SIZE OF CABINET. THE CONCRETE PEDESTAL THAT THE CABINET RESTS ON TO BE 3" WIDER THAN THE CABINET ON ALL SIDES.
9. #4 GRADE 60 REBAR @12" OC BOTH WAYS.
10. #5 GRADE 60 REBAR @12" OC BOTH WAYS.
11. 3/4" x 10' GROUND ROD AND #6 COPPER GROUND CABLE.

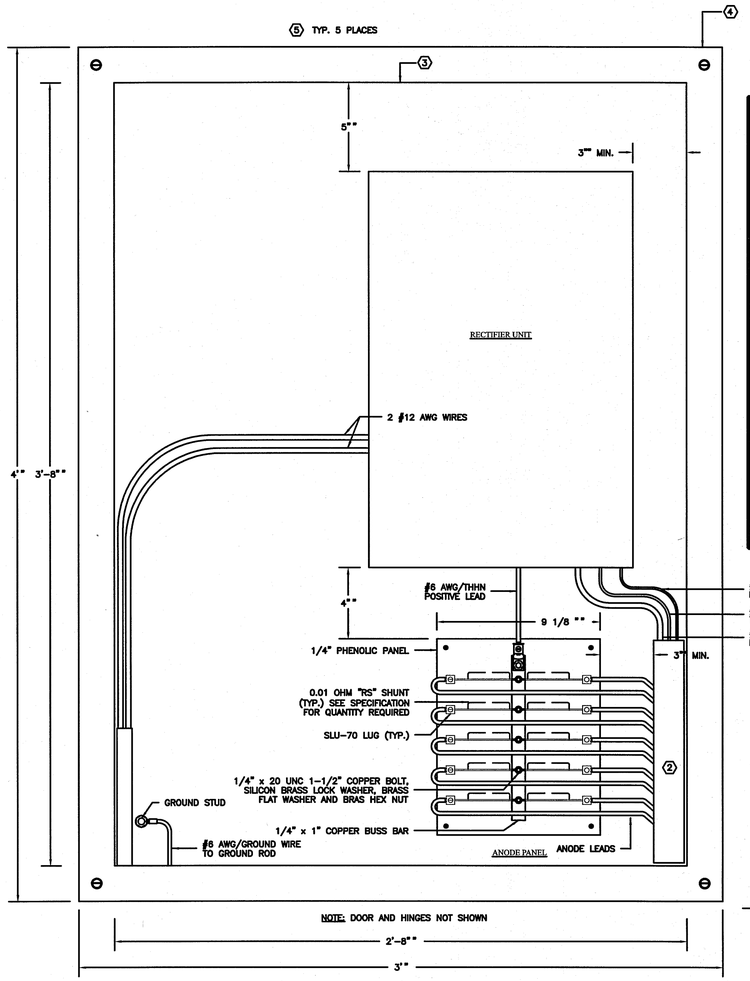

1/56 CATHODIC PROTECTION CABINET

NO SCALE

NOTE: FOR 34A SYSTEM, PROVIDE #2 AWG/THHN POSITIVE LEAD

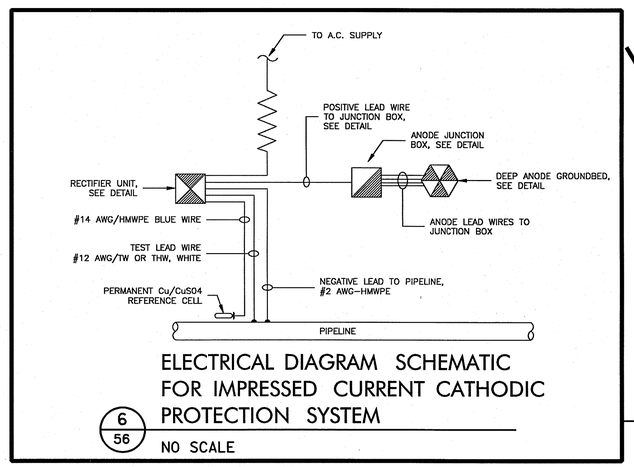

ELECTRICAL DIAGRAM SCHEMATIC FOR IMPRESSED CURRENT CATHODIC PROTECTION SYSTEM

6/56 NO SCALE

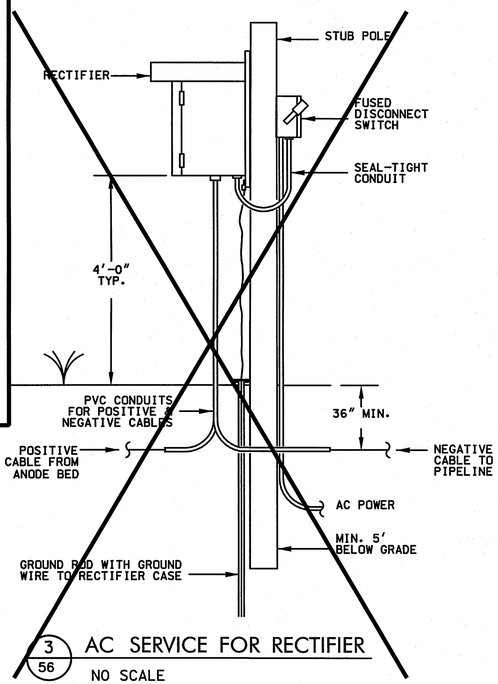

3/56 AC SERVICE FOR RECTIFIER

NO SCALE

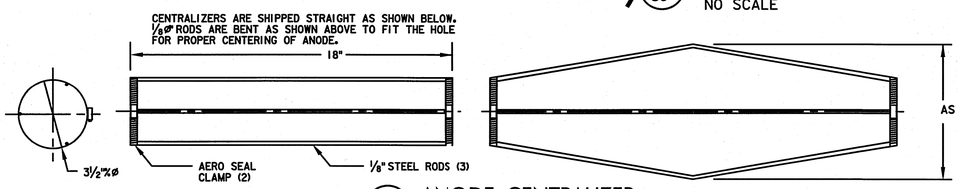

2/56 ANODE CENTRALIZER

NO SCALE

TYPICAL DEEP ANODE GROUND BED AND A.C. SERVICE FOR CATHODIC PROTECTION CABINET

4/56 NO SCALE (SEE SPECIFICATION FOR DETAILS)

SWTP
Surface Water Transmission Program

Lockwood, Andrews & Newnam, Inc.
A LEO A DALY COMPANY
2925 Briarpark Drive Houston, TX 77042

STATE OF TEXAS
ALISA GRUBER
95685
LICENSED PROFESSIONAL ENGINEER
1-3-11
Lockwood, Andrews & Newnam, Inc. Firm No. 2614

SURVEYED BY:
KUO & ASSOCIATES, INC.
C.O.H. Field Book P-5554

CITY OF HOUSTON
DEPARTMENT OF PUBLIC WORKS AND ENGINEERING

SWTP CONTRACT 74A-1

CATHODIC PROTECTION RECTIFIER AND DEEP ANODE GROUND BED

WBS NO. S-000900-0109-4	
DRAWING SCALE	NOT TO SCALE
CITY OF HOUSTON PM	ARTHUR C. MORRIS, P.E.
SHEET NO. 56 OF 91	

ACCEPTED AND FILED
48326
CITY DRAWING RECORDS
HOUSTON TEXAS

No.	Date	Revisions	App.

12/29/2010 4:25:34 PM jmusku

L:\130-10337-004\4-0-Production\4-01-Drawings\Civil\Standard Details\4056-01-DRAD4DS.dgn

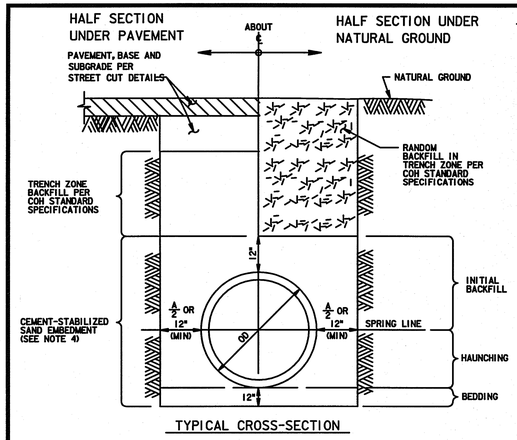

TYPICAL CROSS-SECTION

SANITARY OR STORM SEWER BEDDING AND BACKFILL FOR DRY STABLE TRENCH

1/57 N.T.S.
C.O.H. DWG. NO. 02317-03

NOTES:

1. THIS DETAIL MAY BE USED ONLY FOR DRY STABLE TRENCH CONDITIONS PER COH STANDARD. SEE COH STANDARD SPECIFICATION FOR REQUIREMENTS IN OTHER CONDITIONS.
2. MIN TRENCH WIDTH SHALL BE PIPE OD PLUS AN ALLOWANCE "A" FOR THE NOMINAL PIPE SIZE:

NOMINAL PIPE SIZE	"A"
18" TO 30"	24"
OVER 30"	36"

3. MAX TRENCH WIDTH SHALL BE NOT GREATER THAN MIN TRENCH WIDTH PLUS 24 INCHES, UNLESS OTHERWISE NOTED.
4. ALTERNATIVE EMBEDMENT BACKFILL MATERIALS FOR FORCE MAINS MAY BE ALLOWED. SEE COH STANDARD SPECIFICATIONS.

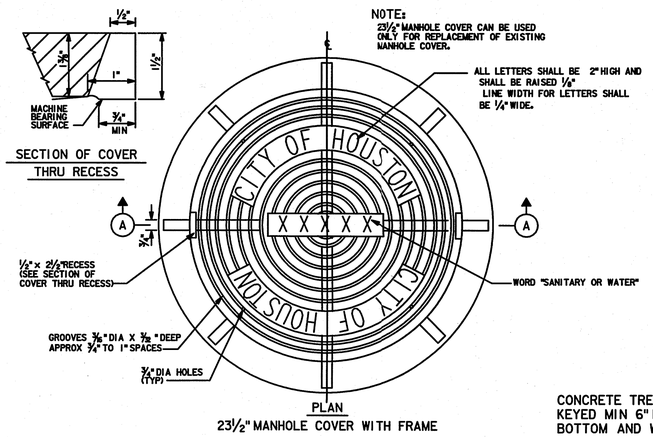

23½" MANHOLE COVER WITH FRAME

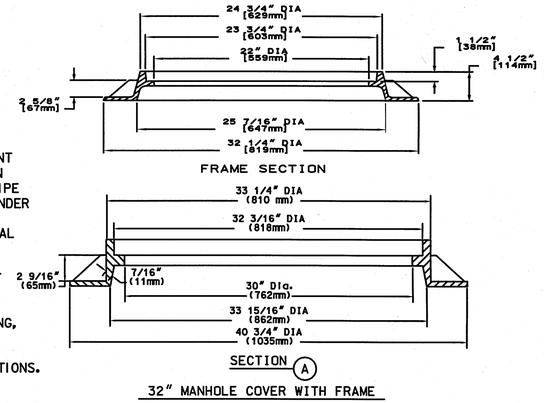

32" MANHOLE COVER WITH FRAME

1) NOTE APPROXIMATE WEIGHTS.
FRAME- 170 LBS 77KG
COVER - 270 LBS 123 KG
UNIT 440 LBS 200 KG
2) MATERIAL - GRAY IRON ASTM A48 CL35B
3) CASTING TO MEET M306 PROOF LOAD SPECIFICATION.
4) MODEL V-1420 ASY OR APPROVED EQUAL

SANITARY SEWER & WATER MANHOLE FRAME AND COVER

2/57 N.T.S.
C.O.H. DWG. NO. 02084-01

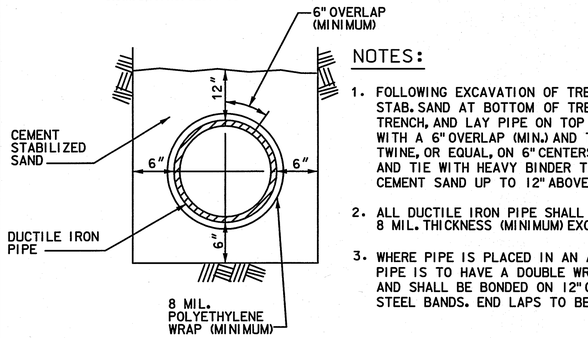

NOTES:

1. FOLLOWING EXCAVATION OF TRENCH, PLACE A 6" LAYER OF CEMENT STAB. SAND AT BOTTOM OF TRENCH. LAY POLYETHYLENE WRAP IN TRENCH, AND LAY PIPE ON TOP OF WRAP. FOLD WRAP AROUND PIPE WITH A 6" OVERLAP (MIN.) AND TIE AROUND PIPE WITH HEAVY BINDER TWINE, OR EQUAL, ON 6" CENTERS. PROVIDE A 12" OVERLAP (MIN.) AND TIE WITH HEAVY BINDER TWINE END LAPS. PLACE ADDITIONAL CEMENT SAND UP TO 12" ABOVE
2. ALL DUCTILE IRON PIPE SHALL HAVE A POLYETHYLENE "WRAP" OF 8 MIL. THICKNESS (MINIMUM) EXCEPT AS NOTED BELOW.
3. WHERE PIPE IS PLACED IN AN AUGER OR TUNNEL OR IN A CASING, PIPE IS TO HAVE A DOUBLE WRAP OF 16 MIL POLYEHTYLENE AND SHALL BE BONDED ON 12" CENTERS WITH ½" STAINLESS STEEL BANDS. END LAPS TO BE AS SPECIFIED FOR TRENCH SECTIONS.

EMBEDMENT AND CORROSION PROTECTION FOR SANITARY SEWER DUCTILE IRON PIPE

6/57 N.T.S.

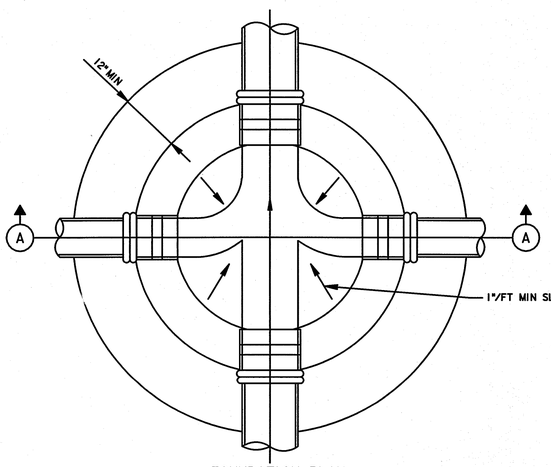

FOUNDATION PLAN

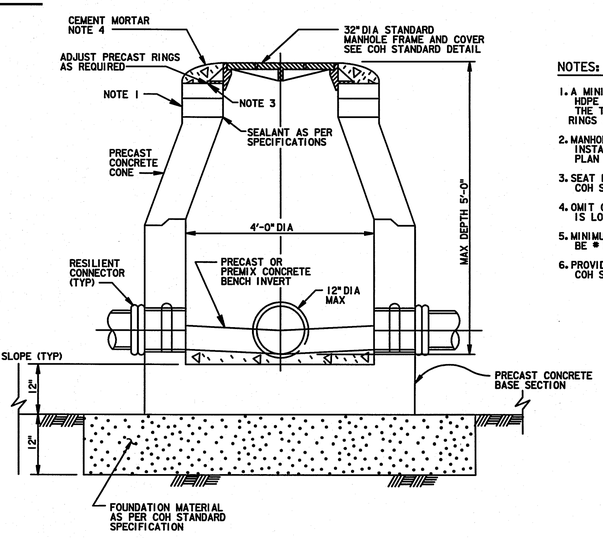

SECTION A

NOTES:

1. A MINIMUM OF 3" PRECAST CONCRETE OR HDPE ADJUSTMENT RING SHALL BE PROVIDED. THE TOTAL HEIGHT OF THE ADJUSTMENT RINGS SHALL NOT EXCEED 12".
2. MANHOLE INTERSECTING PIPES SHALL BE INSTALLED ONLY WHEN CALLED FOR IN PLAN AND PROFILE DRAWING.
3. SEAT MANHOLE FRAME IN SEALANT PER COH STANDARD SPECIFICATION.
4. OMIT CEMENT MORTAR WHEN MANHOLE IS LOCATED IN PAVED AREAS.
5. MINIMUM REINFORCING IN THE BASE BE # 5 @ 8 EW.
6. PROVIDE BACKFILL MATERIAL AS PER COH STANDARD SPECIFICATION.

SANITARY OR STORM SEWER SHALLOW MANHOLE

4/57 N.T.S.
C.O.H. DWG. NO. 02082-01

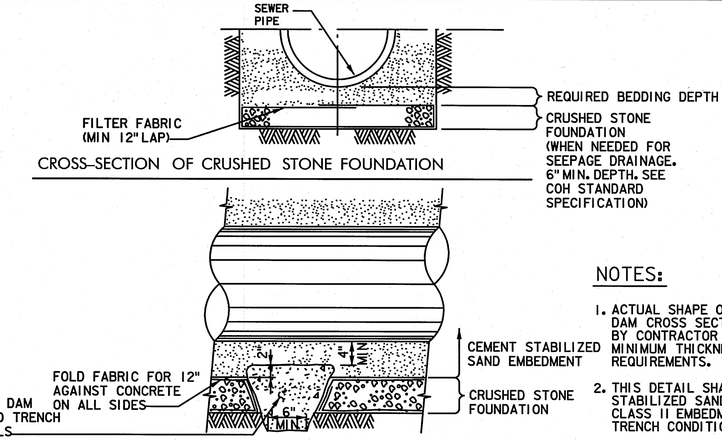

CROSS-SECTION OF CRUSHED STONE FOUNDATION

LONGITUDINAL SECTION ALONG PIPE ℄ AT FOUNDATION TRENCH DAM

NOTES:

1. ACTUAL SHAPE OF CONCRETE TRENCH DAM CROSS SECTION MAY BE DETERMINED BY CONTRACTOR IN FIELD MEETING MINIMUM THICKNESS AND KEY DEPTH REQUIREMENTS.
2. THIS DETAIL SHALL BE USED WITH CEMENT STABILIZED SAND EMBEDMENT, OR OTHER CLASS II EMBEDMENT, IN WET STABLE TRENCH CONDITIONS.
3. PLACE TRENCH DAMS IN CLASS I EMBEDMENTS AT THE MIDPOINT OF LINE SEGMENTS LONGER THAN 100 FEET BETWEEN MANHOLES.

SANITARY OR STORM SEWER EMBEDMENT CRUSHED STONE FOUNDATION FOR WET STABLE TRENCH

3/57 N.T.S.
C.O.H. DWG. NO. 02317-02

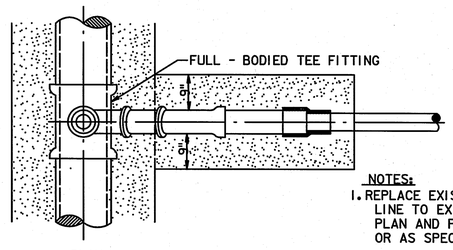

NOTES:

1. REPLACE EXISTING SERVICE LINE TO EXTENT SHOWN ON PLAN AND PROFILE DRAWINGS, OR AS SPECIFIED.
2. EXCAVATE & REMOVE EXISTING SEWER LATERAL AS REQUIRED TO ALLOW RECONSTRUCTION.

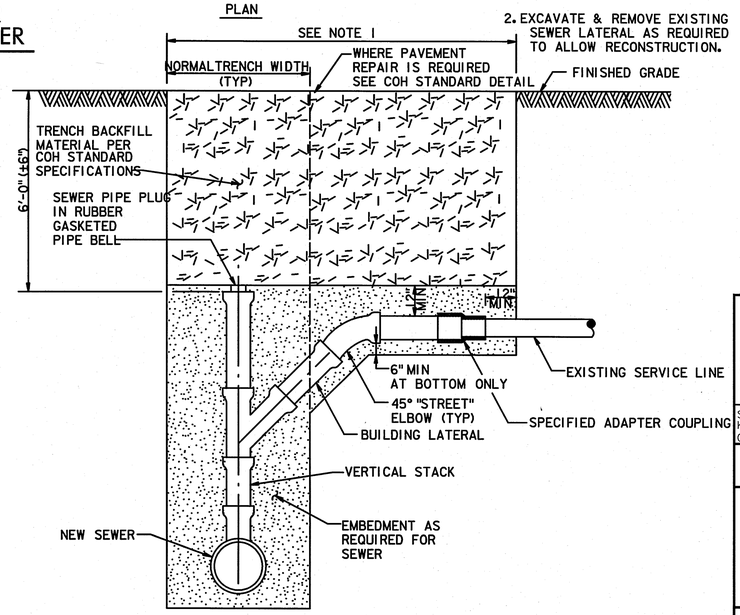

CROSS-SECTION OF SEWER AT SERVICE CONNECTION

SANITARY SEWER SERVICE RECONNECTION WITH STACK ON NEW OR REPLACEMENT SEWER

5/57 N.T.S.
C.O.H. DWG. NO. 02534-02

SWTP
Surface Water Transmission Program

Lockwood, Andrews & Newnam, Inc.
A LEO A DALY COMPANY
2925 Briarpark Drive Houston, TX 77042

SURVEYED BY:
KUO & ASSOCIATES, INC.
C.O.H. Field Book P-5554

STATE OF TEXAS
ALISA GRUBER
95685
LICENSED PROFESSIONAL ENGINEER
Lockwood, Andrews & Newnam, Inc. Firm No. 2614

CITY OF HOUSTON
DEPARTMENT OF PUBLIC WORKS AND ENGINEERING

SWTP CONTRACT 74A-1

STANDARD SANITARY OR STORM SEWER CONSTRUCTION DETAILS

WBS NO.	S-000900-0109-4
DRAWING SCALE	NOT TO SCALE
CITY OF HOUSTON PM	ARTHUR C. MORRIS, P.E.
SHEET NO.	57 OF 91

PUBLIC WORKS AND ENGINEERING ACCEPTED AND FILED 48326 CITY DRAWING NUMBER HOUSTON TEXAS

No.	Date	Revisions	App.

12/28/2010 4:25:34 PM Jmusiku

L:\130-10337-004\4-0-Production\4-01-Drawings\Civil\Standard Details\SWTP-Std San Swr Constr Details.dgn

NOTES:

1. DEPTH OF MANHOLE DETERMINES SECTIONS REQUIRED.
2. PRECAST CONCRETE RINGS SHALL BE PROVIDED FOR A COMBINED ADJUSTMENT HEIGHT OF AT LEAST 12". THE TOTAL HEIGHT OF THE ADJUSTMENT RINGS SHALL NOT EXCEED 1'-6".
3. MANHOLE WALL THICKNESS FOR DEPTH EXCEEDING 12'-0" SHALL BE DETERMINED TO MEET LOADING CONDITIONS. MIN THICKNESS 5".
4. MANHOLE DROP AND INTERSECTING PIPES SHALL BE INSTALLED ONLY WHEN CALLED FOR IN PLAN AND PROFILE DRAWING.
5. SEAT MANHOLE FRAME IN SEALANT PER COH STANDARD SPECIFICATION.
6. ECCENTRIC PRECAST CONCRETE MANHOLE MAY BE USED.
7. OMIT CEMENT MORTAR WHEN MANHOLE IS LOCATED IN PAVED AREAS.
8. MIN REINFORCING IN THE PRECAST CONCRETE BASE SHALL BE # 5 @ 8 EW.

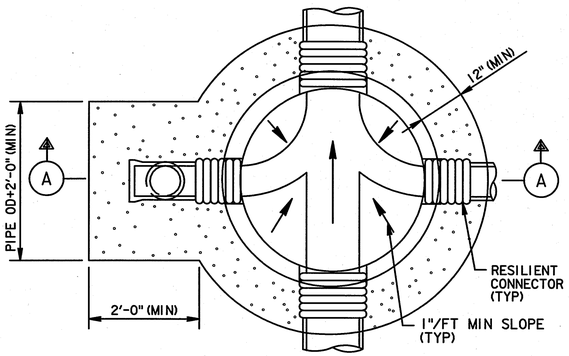

FOUNDATION PLAN

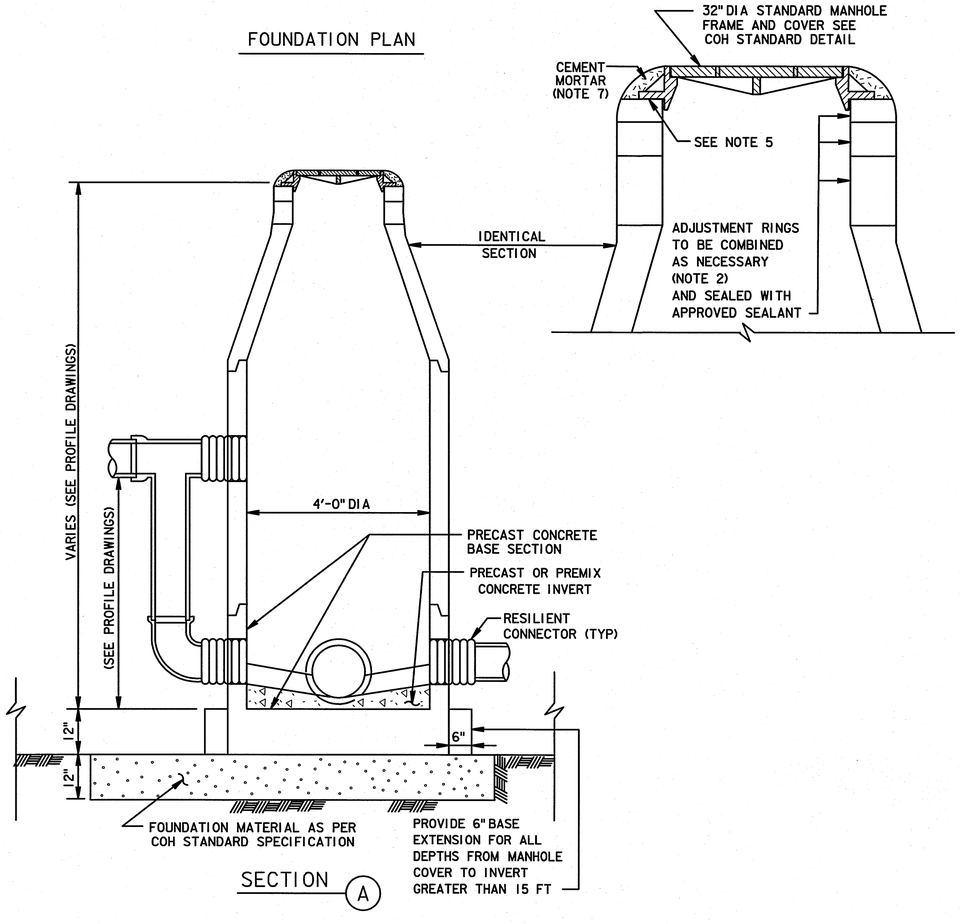

SECTION (A)

SANITARY SEWER 4'–0" DIAMETER PRECAST CONCRETE MANHOLE

1/58

N.T.S.
C.O.H. DWG. NO. 02082-02

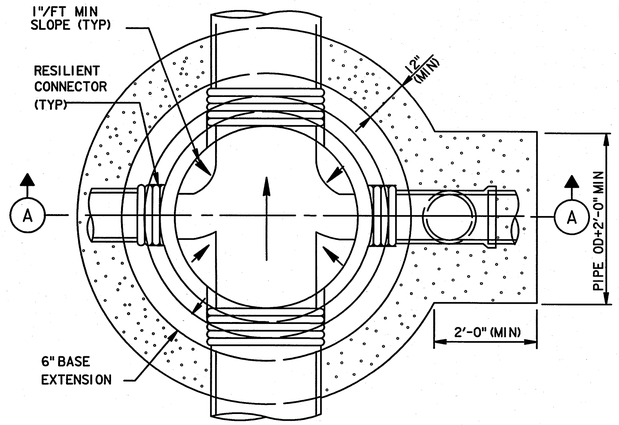

FOUNDATION PLAN

NOTES:

1. DEPTH OF MANHOLE DETERMINES SECTIONS REQUIRED.
2. PRECAST CONCRETE RINGS SHALL BE PROVIDED FOR A COMBINED ADJUSTMENT HEIGHT OF AT LEAST 12". THE TOTAL HEIGHT OF THE ADJUSTMENT RINGS SHALL NOT EXCEED 1'-6".
3. MANHOLE WALL THICKNESS FOR DEPTH EXCEEDING 12'-0" SHALL BE DETERMINED TO MEET LOADING CONDITIONS. MIN THICKNESS 5".
4. MANHOLE DROP AND INTERSECTING PIPES SHALL BE INSTALLED ONLY WHEN CALLED FOR IN PLAN AND PROFILE DRAWING.
5. ALTERNATE ECCENTRIC CONE AND/OR TRANSITION SECTION MAY BE USED.
6. SEAT MANHOLE FRAME IN SEALANT PER COH STANDARD SPECIFICATION.
7. OMIT CEMENT MORTAR WHEN MANHOLE IS LOCATED IN PAVED AREAS.
8. MIN REINFORCING IN THE PRECAST CONCRETE BASE SHALL BE # 5 @ 8 EW.
9. WHERE DIMENSIONAL RESTRICTIONS DICTATE, THE MANHOLE BASE HEIGHT SHALL BE ADJUSTED TO HAVE THE UPPER INLET PIPE OF THE DROP ENTER INTO THE 4'-0" DIAMETER RISER SECTION.

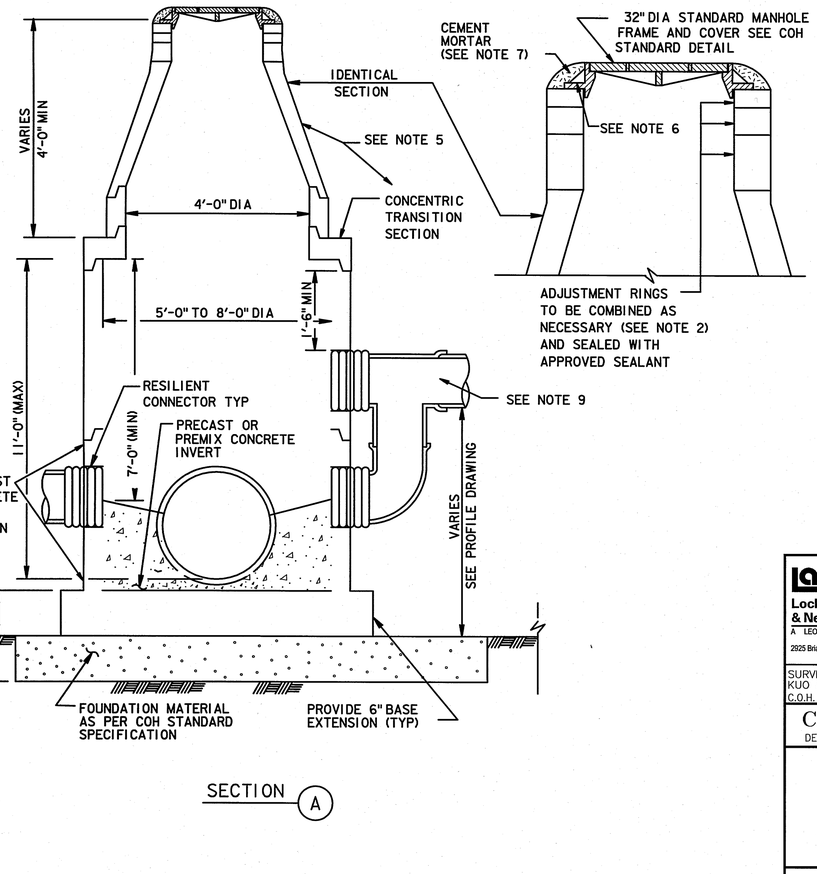

SECTION (A)

SANITARY SEWER 5'–0" TO 8'–0" DIAMETER PRECAST CONCRETE MANHOLE

2/58

N.T.S.
C.O.H. DWG. NO. 02082-03

SWTP
Surface Water Transmission Program

LAN
Lockwood, Andrews & Newnam, Inc.
A LEO A DALY COMPANY
2925 Briarpark Drive Houston, TX 77042

SURVEYED BY:
KUO & ASSOCIATES, INC.
C.O.H. Field Book P-5554

STATE OF TEXAS
ALISA GRUBER
95685
LICENSED PROFESSIONAL ENGINEER
1-14-11
Lockwood, Andrews & Newnam, Inc. Firm No. 2614

CITY OF HOUSTON
DEPARTMENT OF PUBLIC WORKS AND ENGINEERING

SWTP CONTRACT 74A-1

SANITARY SEWER
PRECAST CONCRETE
MANHOLE

WBS NO.	S-000900-0109-4
DRAWING SCALE	NOT TO SCALE
CITY OF HOUSTON PM	ARTHUR C. MORRIS, P.E.
SHEET NO.	58 OF 91

PUBLIC WORKS AND ENGINEERING ACCEPTED AND FILED 48326 CITY DRAWING NUMBER HOUSTON, TEXAS

No. Date Revisions App.

1/14/2011 1:21:33 PM Jmusku

L:\130-10337-004\4-0 Production\4-01-Drawings\CIVIL\Standard Details\058-San Swr Precast Mh.dgn

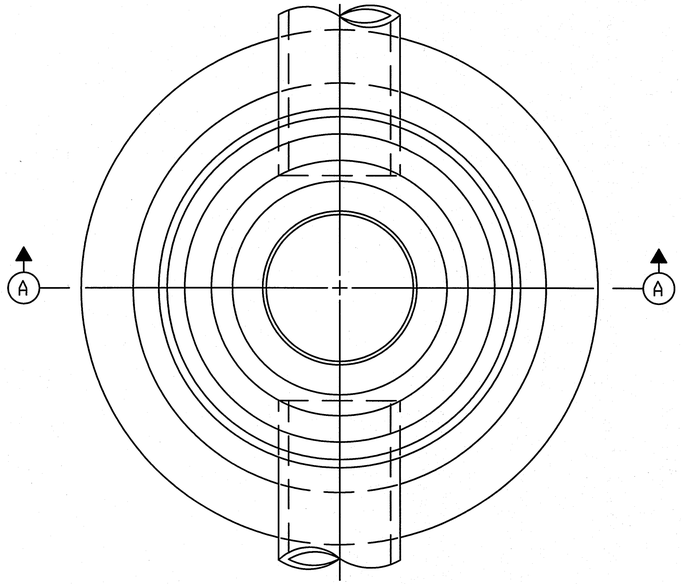

PLAN
(COVER NOT SHOWN)

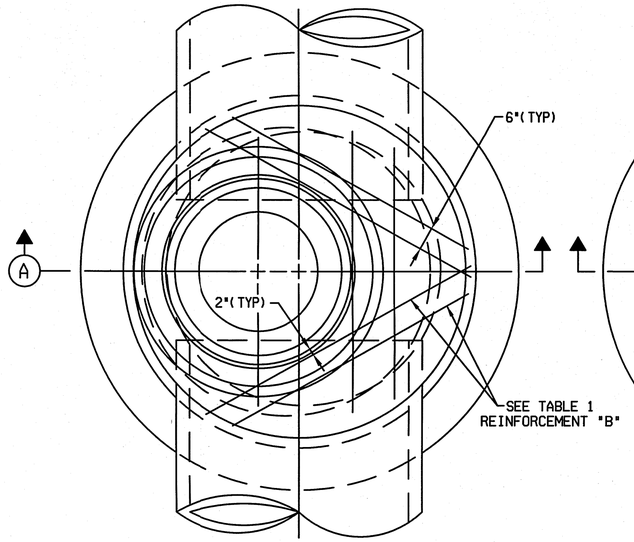

SHALLOW PLAN
(COVER NOT SHOWN)

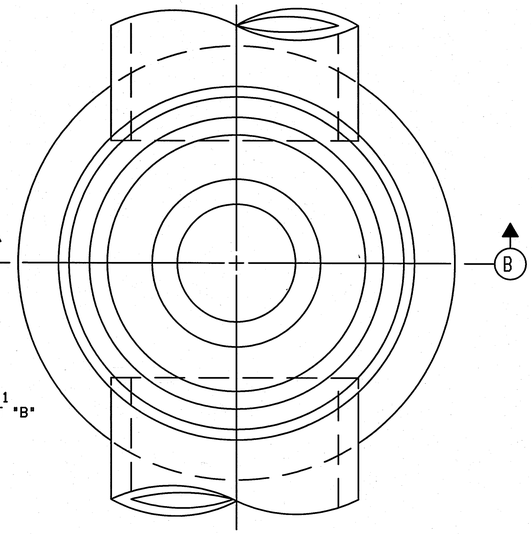

STANDARD PLAN
(COVER NOT SHOWN)

NOTE:

WHEN MANHOLE HAS LESS DEPTH THAN MIN SHOWN ON TABLE 1, BUILD SECTION A OTHERWISE BUILD SECTION B.

TABLE
SEWER SIZE vs MANHOLE SIZE

SEWER SIZE	MANHOLE BASE DIAMETER
42"	5'-0"
36"	4'-6"
30" AND LESS	4'-0"

TABLE 1
DATA FOR VARIOUS PIPE DIAMETERS

PIPE DIA (INCHES)	MIN DEPTH	REINFORCEMENT ("A")	REINFORCEMENT ("B")
48"	8'-0"	#5 @ 12"EW	2-#6
54"	9'-4"	#5 @ 10"EW	2-#6
60"	10'-7"	#5 @ 8"EW	2-#7
66"	11'-10"	#5 @ 7"EW	2-#7
72"	13'-2"	#5 @ 6"EW	2-#7

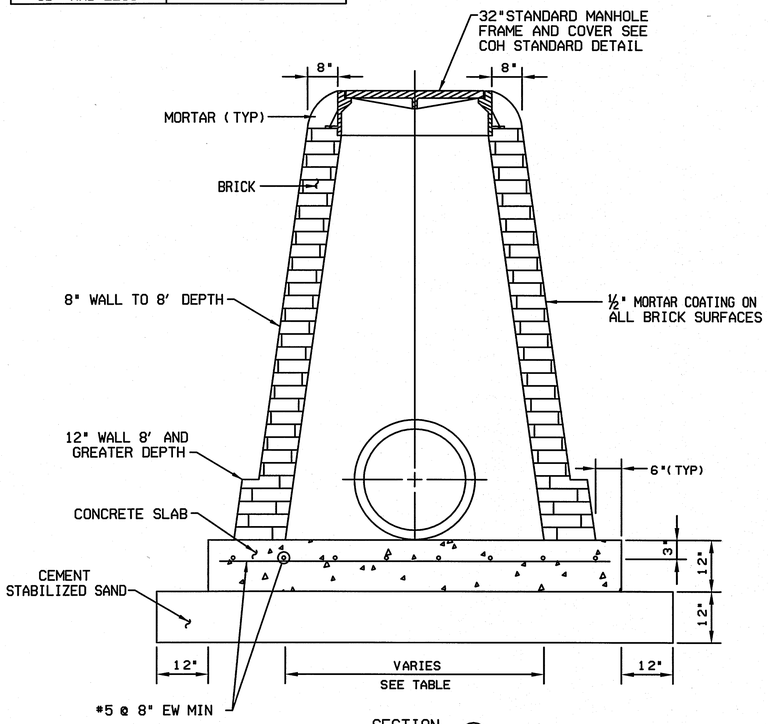

SECTION (A)

STORM SEWER MANHOLE TYPE "C" FOR 42" DIAMETER RCP AND SMALLER

1/59

COH DWG NO. 02081-01

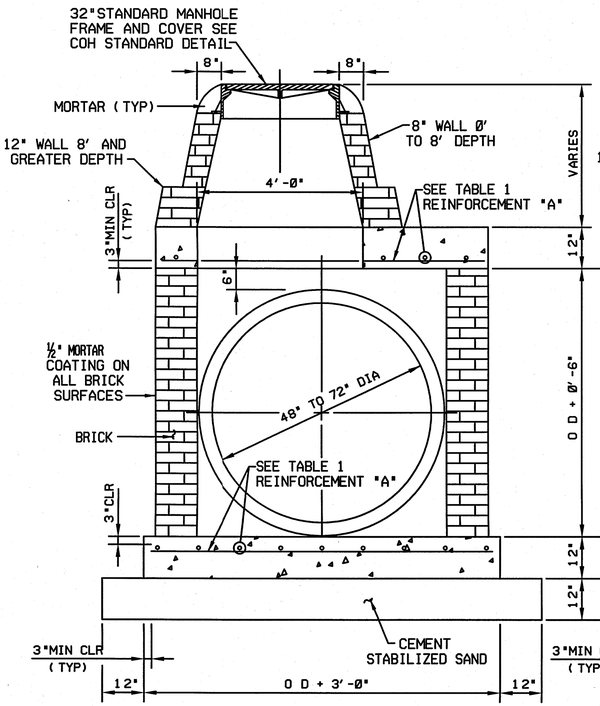

SECTION (A)

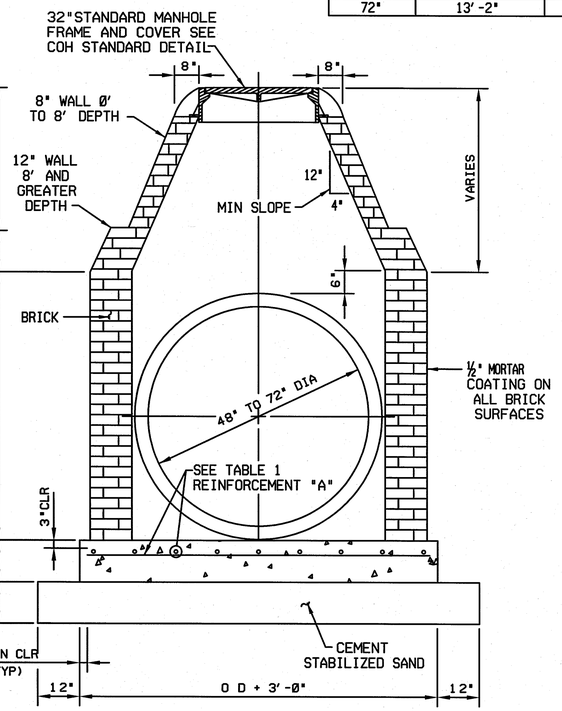

SECTION (B)

STORM SEWER MANHOLE TYPE "C" FOR 48" TO 72" DIAMETER RCP

2/59

COH DWG NO. 02081-02

SWTP
Surface Water Transmission Program

Lockwood, Andrews & Newnam, Inc.
A LEO A DALY COMPANY
2925 Briarpark Drive Houston, TX 77042

STATE OF TEXAS
ALISA GRUBER
95685
LICENSED PROFESSIONAL ENGINEER
Lockwood, Andrews & Newnam, Inc. Firm No. 2614

SURVEYED BY:
KUO & ASSOCIATES, INC.
C.O.H. Field Book P-5554

CITY OF HOUSTON
DEPARTMENT OF PUBLIC WORKS AND ENGINEERING

SWTP CONTRACT 74A-1

STANDARD DRAINAGE DETAILS 1 OF 2

WBS NO.
S-000900-0109-4

DRAWING SCALE
NOT TO SCALE

CITY OF HOUSTON PM
ARTHUR C. MORRIS, P.E.

SHEET NO. 59 OF 91

PUBLIC WORKS AND ENGINEERING
ACCEPTED AND FILED
48326
CITY DRAINAGE RULES
HOUSTON, TEXAS

No.	Date	Revisions	App'd

jmusiku
12/28/2010 4:25:35 PM
L:\130-1037-004\4-0 Production\4-01-0 Drawings\Civil\Standard Details\SWTP Standard Drainage Details 1 of 2.dgn

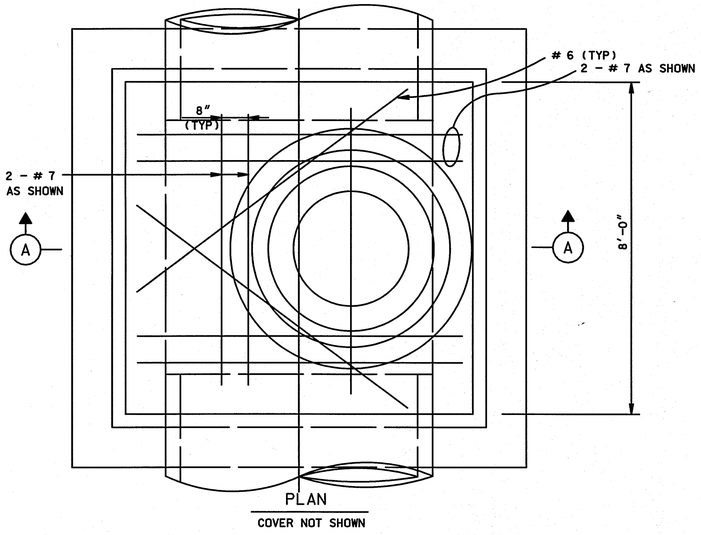

PLAN

COVER NOT SHOWN

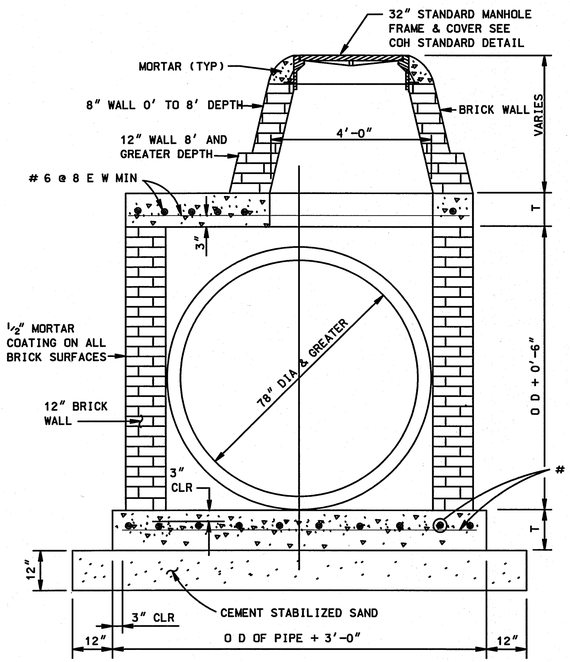

SECTION (A)

1/60 STORM SEWER MANHOLE TYPE "C" FOR
78" DIAMETER RCP AND GREATER

COH DWG NO. 02081-03

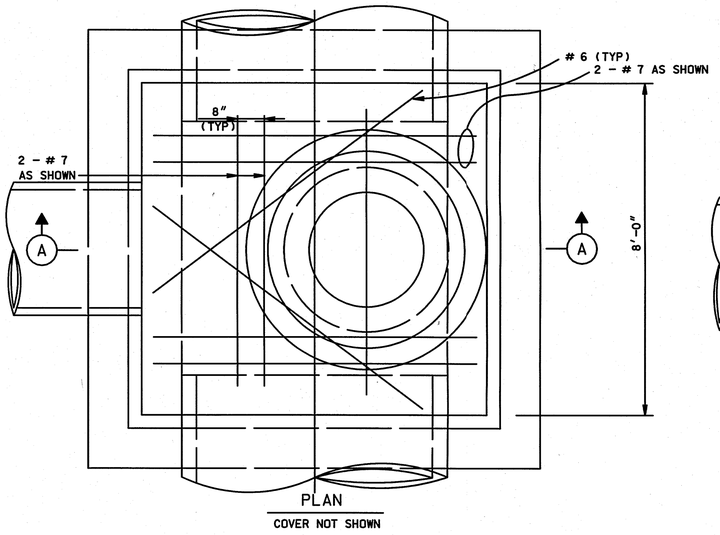

PLAN

COVER NOT SHOWN

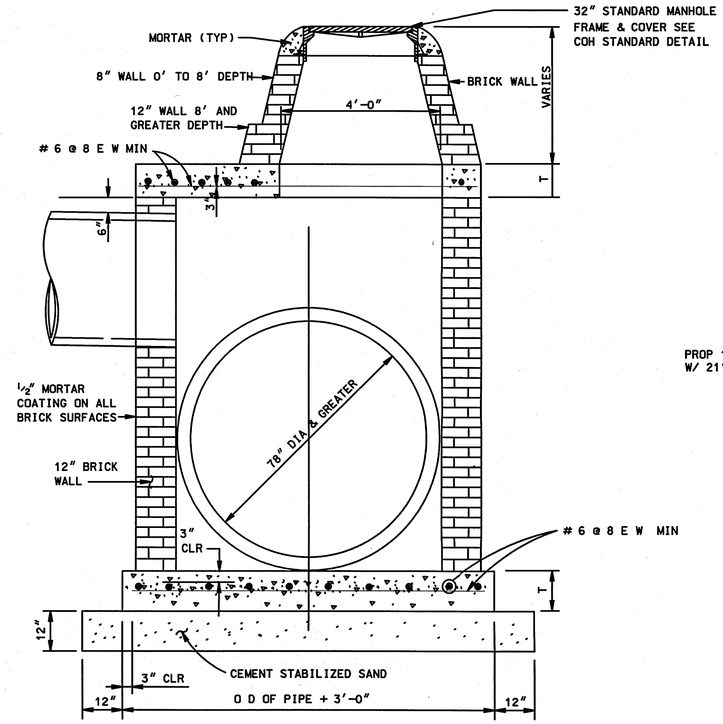

SECTION (A)

2/60 STORM SEWER MANHOLE TYPE "C" FOR
78" DIAMETER RCP AND GREATER WITH LATERAL

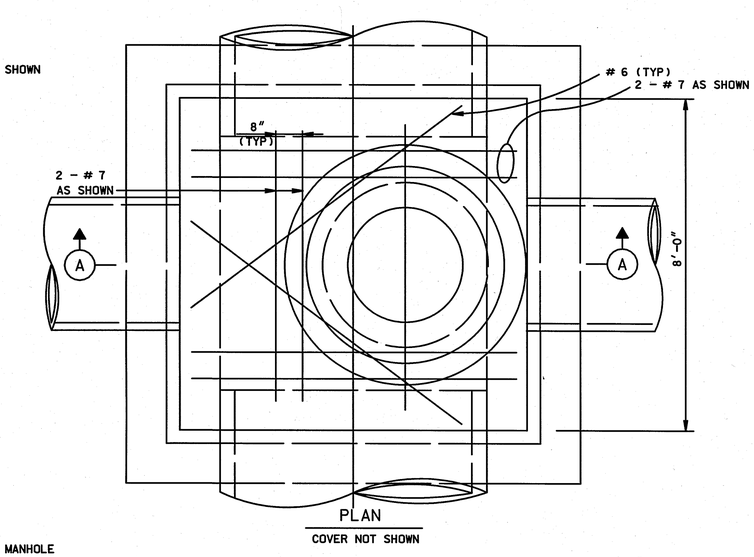

PLAN

COVER NOT SHOWN

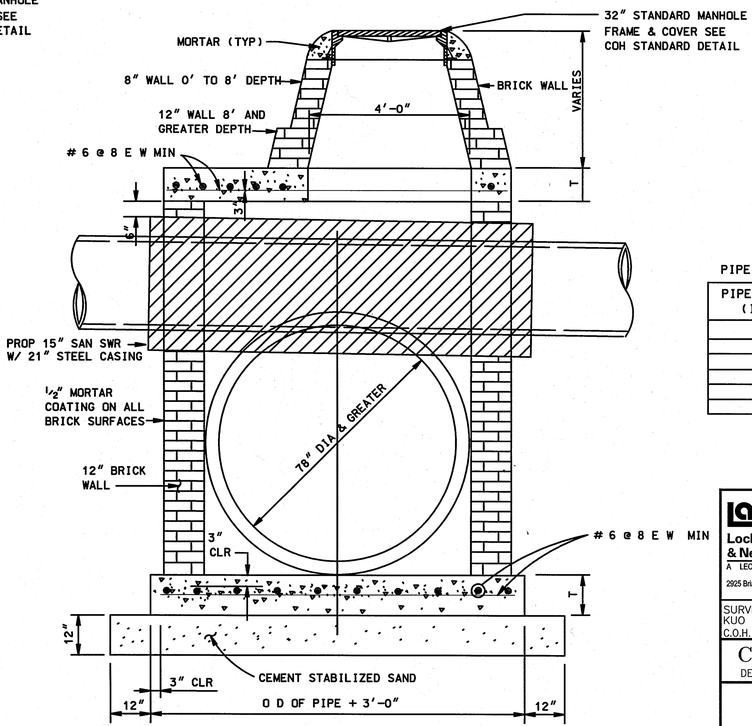

SECTION (A)

3/60 STORM SEWER MANHOLE TYPE "C" FOR
78" DIAMETER RCP AND GREATER WITH SANITARY SEWER

TABLE 1

PIPE DIAMETER VS SLAB THICKNESS

PIPE DIAMETER (INCHES)	SLAB THICKNESS T (INCHES)
78	12
84	12
90	13
96	14
102	14
108	15

SWTP
Surface Water Transmission Program

Lockwood, Andrews & Newnam, Inc.
A LEO A DALY COMPANY
2925 Briarpark Drive Houston, TX 77042

SURVEYED BY:
KUO & ASSOCIATES, INC.
C.O.H. Field Book P-5554

STATE OF TEXAS
ALISA GRUBER
95685
LICENSED PROFESSIONAL ENGINEER
Lockwood, Andrews & Newnam, Inc.
Firm No. 2614

CITY OF HOUSTON
DEPARTMENT OF PUBLIC WORKS AND ENGINEERING

SWTP CONTRACT 74A-1

STANDARD DRAINAGE
DETAILS 2 OF 2

WBS NO.	S-000900-0109-4
DRAWING SCALE	NOT TO SCALE
CITY OF HOUSTON PM	ARTHUR C. MORRIS, P.E.
SHEET NO.	60 OF 91

ACCEPTED AND FILED
48326
CITY DRAWING NUMBER
HOUSTON, TEXAS

No.	Date	Revisions	App'd

12/28/2010 4:25:36 PM jmusku

L:\130-1033-00A\4-0 Production\4-01 Drawings\CIVIL\Standard Details\860-Standard Drainage Details 2 of 2.dgn

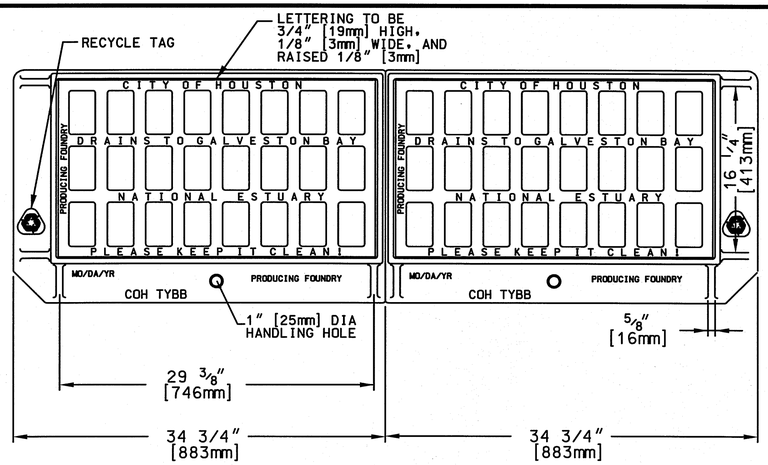

1) NOTE: APPROXIMATE WEIGHTS.

GRATE- 115 LBS 52kg
FRAME- 120 LBS 55kg
I BEAM- 107 LBS 49kg
UNIT- 577 LBS 262kg

2) MATERIAL- GRAY IRON ASTM A48 CL35B

3) CASTING TO MEET M306 PROOF LOAD SPECIFICATION

4) EJIW V-4243 ASY OR APPROVED EQUAL

OPEN AREA OF GRATE:
240 SQ. IN.
1548 SQ. cm.

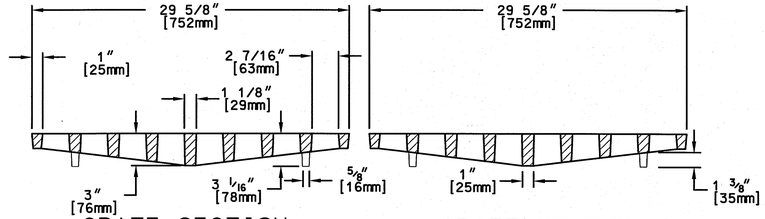

GRATE SECTION

GRATE SECTION

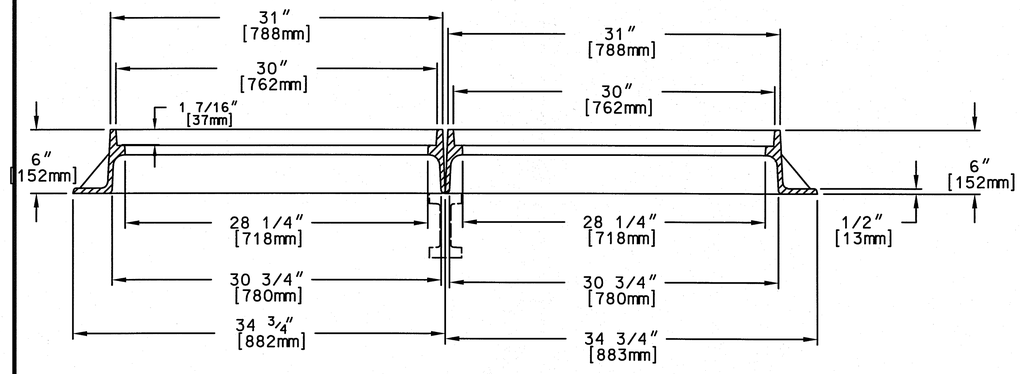

FRAME SECTION

FRAME SECTION

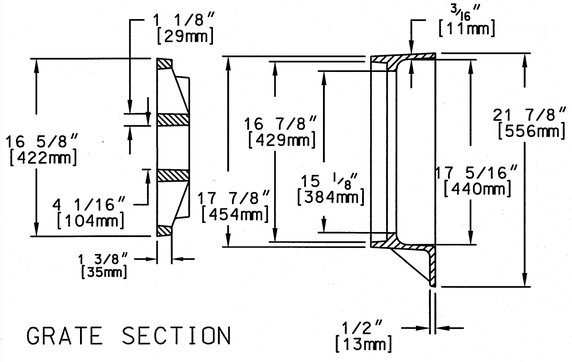

GRATE SECTION

FRAME SECTION

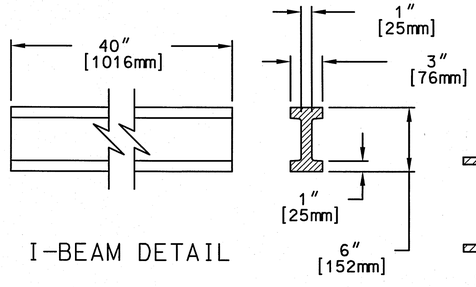

I-BEAM DETAIL

STORM SEWER FRAME AND GRATE FOR TYPE "BB" INLET DOUBLE ASSEMBLY

1/61

N.T.S.
C.O.H. DWG. NO. 02084-05

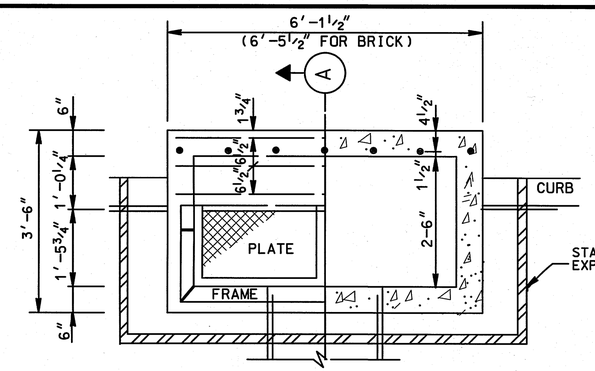

HALF PLAN HALF SECTION PLAN

GENERAL NOTES:

USE STD CAST IRON FRAME & PLATES.
LEAD SHALL LEAVE INLET AT LOCATION AND GRADE REQUIRED.
WHEN BRICK INLETS ARE BUILT EXTEND DOWELS 4 INCHES FROM CURB BEAM INTO BRICKWORK.
WHEN BRICK INLETS ARE BUILT, WALLS SHALL BE INCREASED TO 8 INCHES, AND INLET BEAMS TO BE 4 INCHES LONGER.

NOTES:

1. DIMENSION VARIES BASED ON PIPE DIAMETER AND WALL THICKNESS.
2. CENTER REINFORCING IN SLAB AND WALLS.
3. CENTER STEEL BEAM ON INLET AND CAST INTO WALLS AS SHOWN.
4. WHEN TOP OF CURB TO FLOWLINE IS GREATER THAN 8 FEET USE TYPE C INLET.

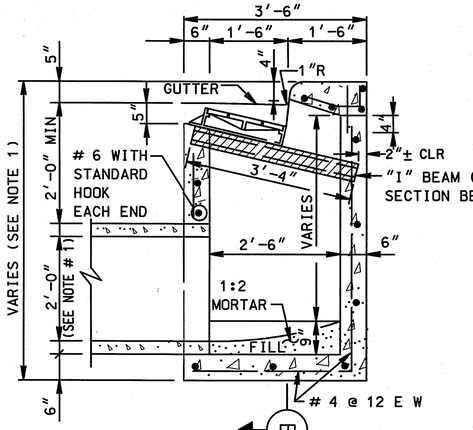

SECTION A

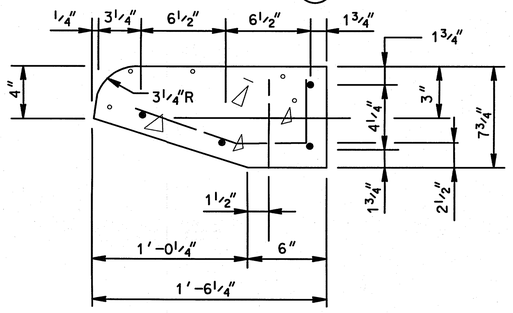

TRANSVERSE SECTION

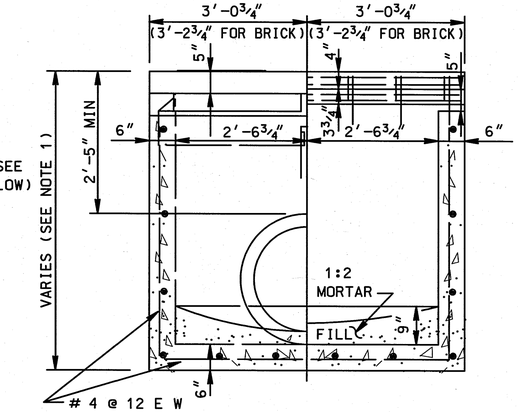

HALF FRONT ELEVATION HALF SECTION B

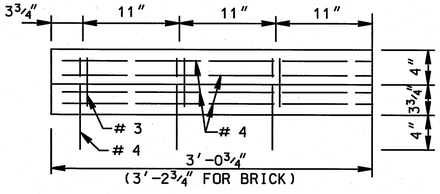

HALF FRONT ELEV

ACCEPTABLE ALTERNATE STEEL BEAM SIZES:
S6x17.5
W6x16
(GALVANIZED)

SECTION THRU BEAM

PRECAST CURB BEAM

CURB BEAM BAR LIST				
NO	SIZE	LENGTH	SHAPE	LOC
4	# 4	5'-10"	ST	HOR
7	# 4	0'-10"	ST	VERT
7	# 3	1'-6"	BT	

STORM SEWER TYPE "BB" INLET

2/61

N.T.S.
C.O.H. DWG. NO. 02632-04

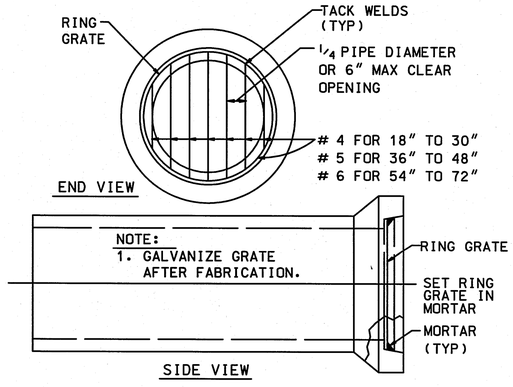

STORM SEWER RING GRATE FOR OPEN END OF 18" TO 72" RCP STUBS TO DITCH

3/61

N.T.S. C.O.H. DWG. NO. 02084-11

SWTP
Surface Water Transmission Program

Lockwood, Andrews & Newnam, Inc.
A LEO A DALY COMPANY
2925 Briarpark Drive Houston, TX 77042

SURVEYED BY:
KUO & ASSOCIATES, INC.
C.O.H. Field Book P-5554

STATE OF TEXAS
ALISA GRUBER
95685
LICENSED PROFESSIONAL ENGINEER
Lockwood, Andrews & Newnam, Inc. Firm No. 2614

CITY OF HOUSTON
DEPARTMENT OF PUBLIC WORKS AND ENGINEERING

SWTP CONTRACT 74A-1

STORM SEWER DETAILS
TYPE "BB" INLET

WBS NO.	S-000900-0109-4
DRAWING SCALE	NOT TO SCALE
CITY OF HOUSTON PM	ARTHUR C. MORRIS, P.E.
SHEET NO.	61 OF 91

PUBLIC WORKS AND ENGINEERING
ACCEPTED AND FILED
48326
CITY DRAWING NO.
HOUSTON, TEXAS

No. Date Revisions App.

12/28/2010 4:25:36 PM jmusku

L:\1301-0337-004\4-0-Production\4-01-Drawings\Civil\Standard Detail\061-Storm Swr BB Inlet Dtls.dgn

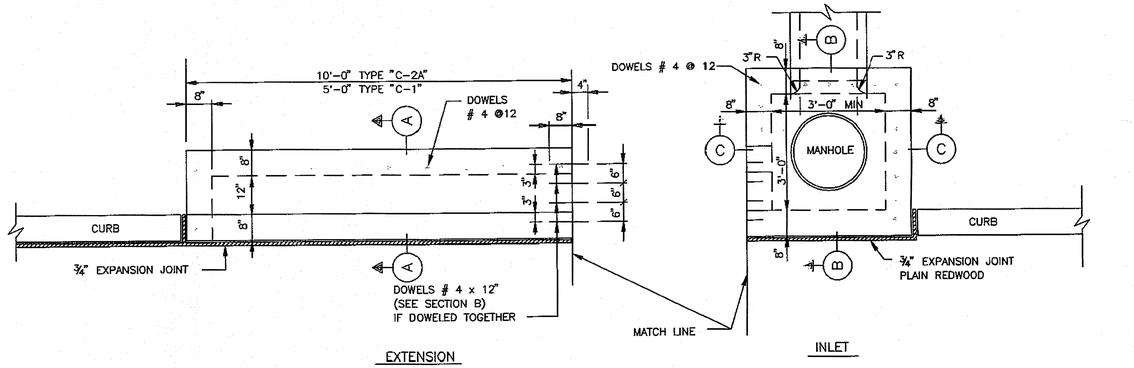

PLAN

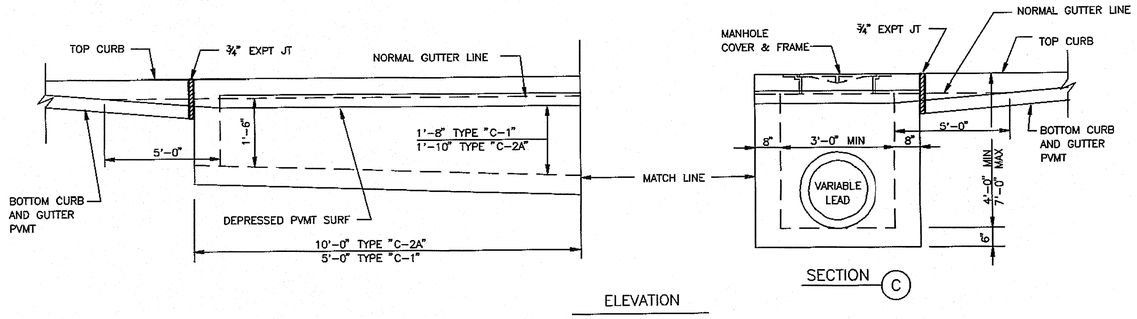

ELEVATION

SECTION C

GENERAL NOTES:

TYPE "C-1" INLET WITH ONE EXTENSION (5'-0" LONG)

TYPE "C-2" INLET WITH ONE EXTENSION ON EACH SIDE

TYPE "C-2A" INLET WITH DOUBLE EXTENSION (10'-0" LONG)

NOTES:

1. FOR TYPE "C-2A" INLETS PROVIDE A CENTER 6"X6" COLUMNS IN THE CURB LINE BETWEEN ALL EXTENSIONS.
2. WALLS TO BE 6" IF BUILT WITH REINFORCED CONCRETE. WHEN BUILT WITH BRICK WALL, USE STRAIGHT WALL IN BACK WITH 6" REINFORCED CONCRETE TOP SLABS DOWELLED INTO BRICK WALLS WITH # 4 X 8" @ 12.

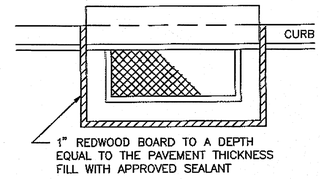

PLAN VIEW – CURB INLET

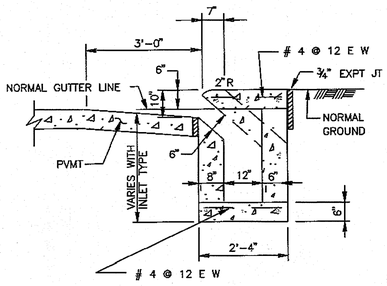

SECTION A

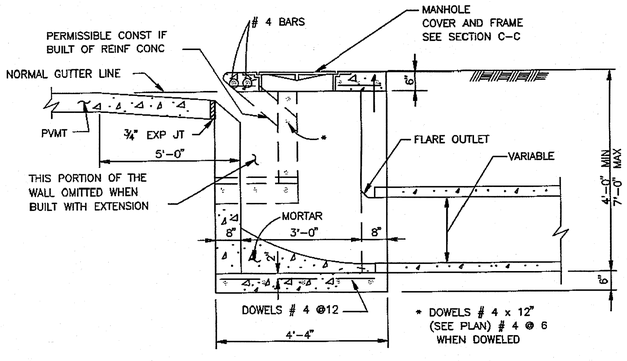

SECTION B

CITY OF HOUSTON DEPARTMENT OF PUBLIC WORKS AND ENGINEERING ENGINEERING, CONSTRUCTION AND REAL ESTATE DIVISION	
STORM SEWER TYPE "C-1", "C-2" AND "C-2A" INLETS (NOT TO SCALE)	
APPROVED BY: CITY ENGINEER	APPROVED BY: DIRECTOR OF PUBLIC WORKS AND ENGINEERING
EFF DATE: OCT-01-2002	DWG NO: 02632-06

SWTP
Surface Water Transmission Program

Lockwood, Andrews & Newnam, Inc.
A LEO A DALY COMPANY
2925 Briarpark Drive Houston, TX 77042

SURVEYED BY:
KUO & ASSOCIATES, INC.
C.O.H. Field Book P-5554

STATE OF TEXAS
ALISA GRUBER
95685
LICENSED PROFESSIONAL ENGINEER
1-3-11
Lockwood, Andrews & Newnam, Inc. Firm No. 2614

CITY OF HOUSTON
DEPARTMENT OF PUBLIC WORKS AND ENGINEERING

SWTP CONTRACT 74A-1

TYPE C-1, C-2, AND C-2A INLETS

WBS NO. S-000900-0109-4	ACCEPTED AND FILED PUBLIC WORKS AND ENGINEERING 48326 CITY DRAWING NUMBER HOUSTON TEXAS
DRAWING SCALE	
NOT TO SCALE	
CITY OF HOUSTON PM	
ARTHUR C. MORRIS, P.E.	
SHEET NO. 62 OF 91	

No.	Date	Revisions	App.

12/28/2010 4:25:37 PM jmusku

L:\130-10337-004\4-0-Production\4-01-Drawings\Civil\Standard Details\062-TYPE C INLET standard.dgn

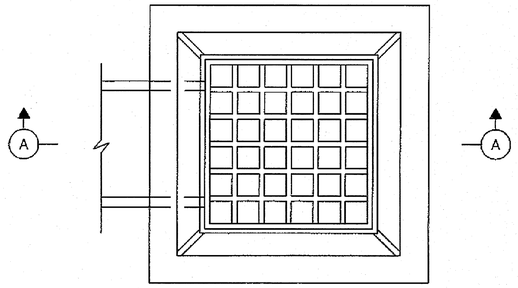

PLAN

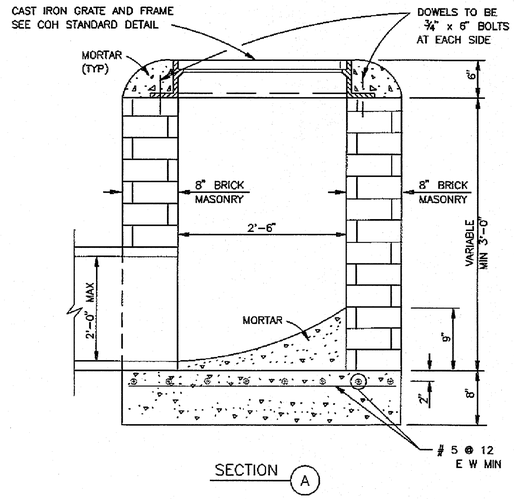

SECTION (A)

CITY OF HOUSTON DEPARTMENT OF PUBLIC WORKS AND ENGINEERING ENGINEERING, CONSTRUCTION AND REAL ESTATE DIVISION	
STORM SEWER TYPE "A" GRATE INLET (NOT TO SCALE)	
APPROVED BY: CITY ENGINEER	APPROVED BY: DIRECTOR OF PUBLIC WORKS AND ENGINEERING
EFF DATE: OCT-01-2002	DWG NO: 02632-01

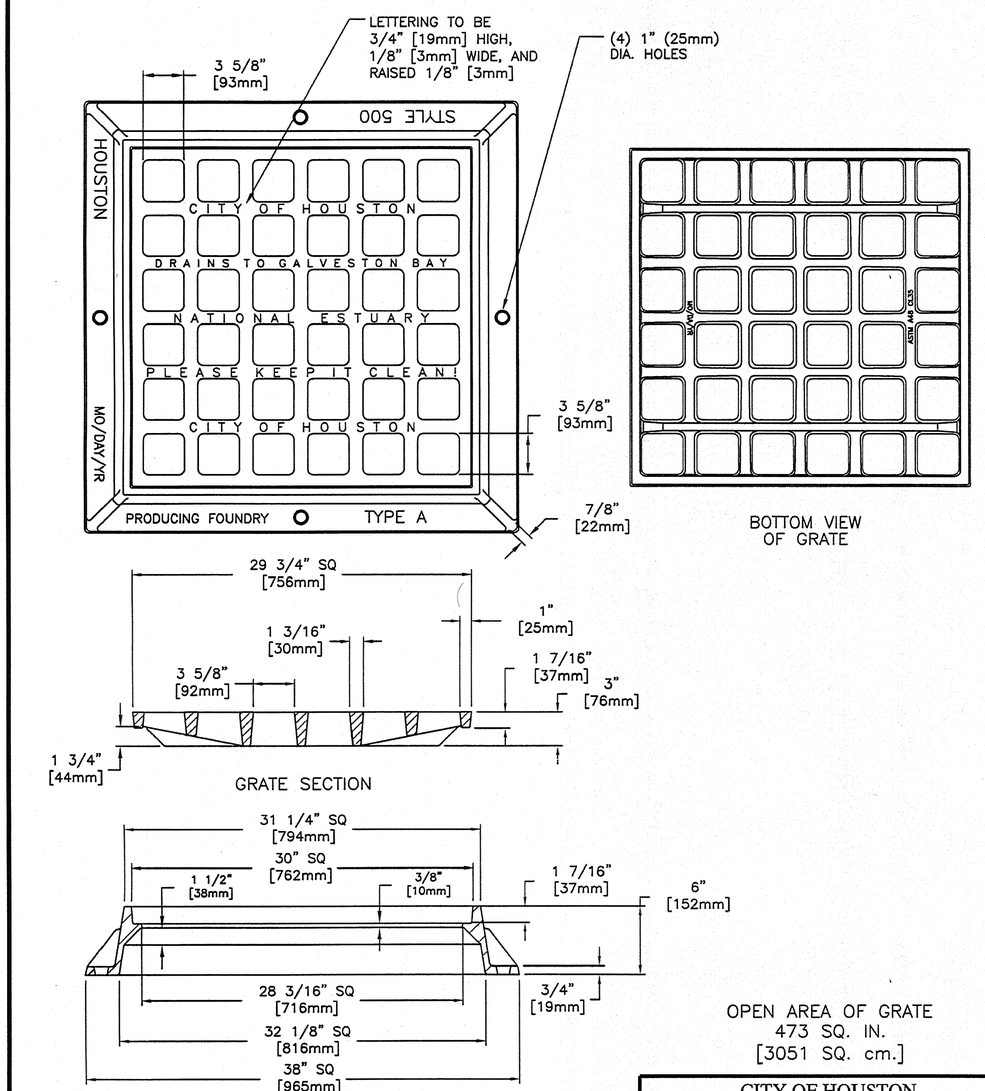

OPEN AREA OF GRATE
473 SQ. IN.
[3051 SQ. cm.]

1) NOTE: APPROXIMATE WEIGHTS.
   GRATE- 190 LBS 86kg
   FRAME- 235 LBS 107kg
   UNIT- 425 LBS 193kg
2) MATERIAL- GRAY IRON ASTM A48 CL35B
3) CASTING TO MEET M306 PROOF LOAD SPECIFICATION
4) EJIW V-4880 ASY OR APPROVED EQUAL

CITY OF HOUSTON DEPARTMENT OF PUBLIC WORKS AND ENGINEERING ENGINEERING, CONSTRUCTION AND REAL ESTATE GROUP	
STORM SEWER TYPE "A" INLET GRATE AND FRAME (NOT TO SCALE)	
APPROVED BY: CITY ENGINEER	APPROVED BY: DIRECTOR OF PUBLIC WORKS AND ENGINEERING
EFF. DATE: 04-01-07	DWG. NO: 02084-08

No.	Date	Revisions	App'd

SWTP
Surface Water Transmission Program

Lockwood, Andrews & Newnam, Inc.
A LEO A DALY COMPANY
2925 Briarpark Drive Houston, TX 77042

STATE OF TEXAS
ALISA GRUBER
95685
LICENSED PROFESSIONAL ENGINEER
Lockwood, Andrews & Newnam, Inc. Firm No. 2614

SURVEYED BY:
KUO & ASSOCIATES, INC.
C.O.H. Field Book P-5554

CITY OF HOUSTON
DEPARTMENT OF PUBLIC WORKS AND ENGINEERING

SWTP CONTRACT 74A-1

TYPE "A" GRATE INLETS
DETAILS

WBS NO. S-000900-0109-4	ACCEPTED AND FILED 48326 CITY DRAWING NUMBER HOUSTON, TEXAS
DRAWING SCALE	
NOT TO SCALE	
CITY OF HOUSTON PM	
ARTHUR C. MORRIS, P.E.	
SHEET NO. 63 OF 91	

12/28/2010 4:25:52 PM jmusiku
L:\1301-1033-004\4-0-Production\4-01-Drawings\Civil\Standard Details\063-TYPE "A" GRATE INLET standard.dgn

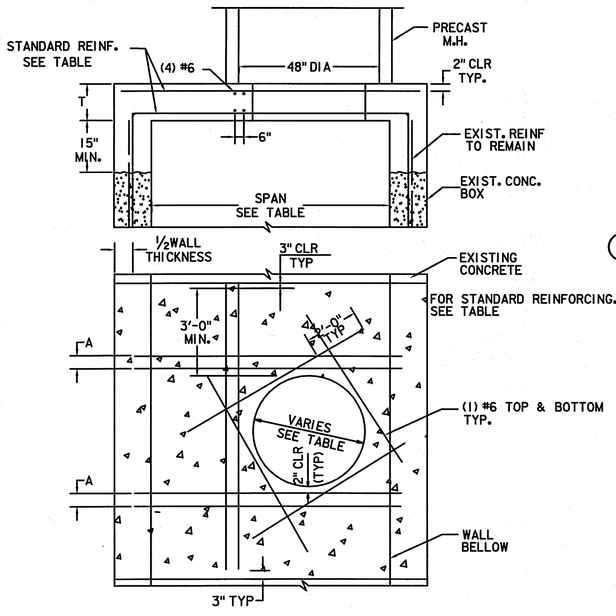

SPAN (ft)	T (in)	STANDARD REINF	OPENING SIZE	A
3	14	#6 @ 11" O/C T&B	36"ϕ	2#6 @ 5 5/64" O/C T&B
4	16	#6 @ 9" O/C T&B	36"ϕ	2#6 @ 4 7/64" O/C T&B
5	18	#6 @ 8" O/C T&B	48"ϕ	3#6 @ 4 7/64" O/C T&B
6	20	#6 @ 7" O/C T&B	48"ϕ	4#6 @ 3 57/64" O/C T&B
7	20	#6 @ 7" O/C T&B	48"ϕ	4#6 @ 3 57/64" O/C T&B
8	21	#6 @ 7" O/C T&B	48"ϕ	4#6 @ 3 57/64" O/C T&B
9	21	#6 @ 7" O/C T&B	48"ϕ	4#6 @ 3 57/64" O/C T&B
10	22	#6 @ 6" O/C T&B	48"ϕ	4#6 @ 3 57/64" O/C T&B
11	23	#6 @ 6" O/C T&B	48"ϕ	4#6 @ 3 57/64" O/C T&B
12	23	#6 @ 5" O/C T&B	48"ϕ	5#6 @ 3" O/C T&B

DESIGNED FOR HS 20 W/ 2'-0" COVER TO 20'-0" COVER

1 64 PROPOSED MANHOLE ON EXISTING BOX STORM SEWER

NTS
COH DWG No. 02081-08

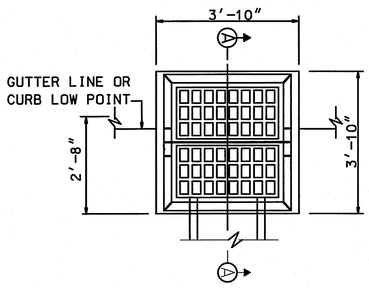

NOTE TO SPECIFIER
BASE AND WALL TO MEET THE SIZE AND REQUIREMENT OF TYPE B INLETS.

NOTE:

1. FOR DRIVEWAY ENTRANCES ONLY. TYPE "B" INLETS ARE NOT APPROVED FOR NEW STREET APPLICATIONS.

5 64 STORM SEWER TYPE "B"-INLET WITH GATE TOP

NTS
COH DWG NO. 02632-02

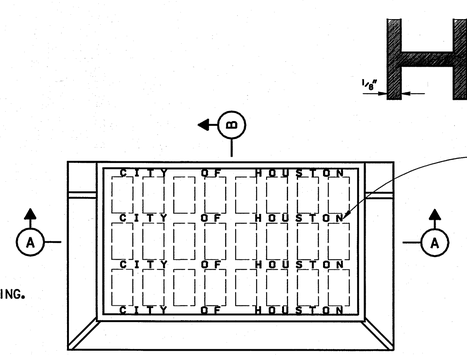

NOTE:

1. THE TYPE "D-1" GRATE WILL FIT FRAME FOR TYPE "B" INLETS AND TYPE "BB" INLETS.

2 64 STORM SEWER TYPE "D-1" INLET GRATE AND FRAME

NTS COH DWG No. 02084-07

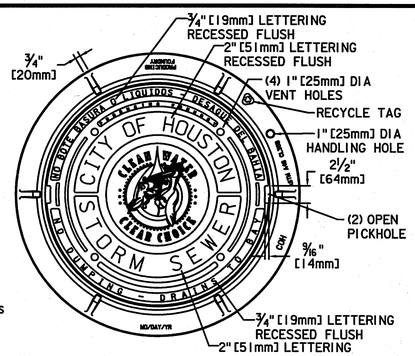

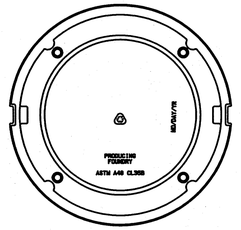

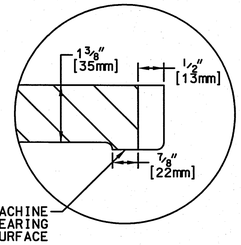

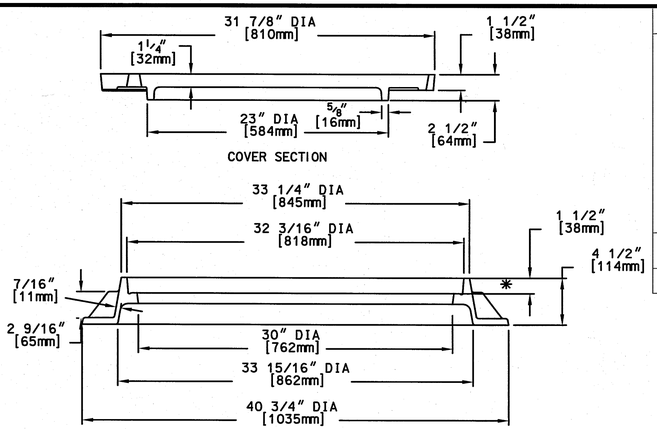

1) NOTE: APPROXIMATE WEIGHTS.
FRAME- 170 LBS 77kg
COVER- 270 LBS 123kg
UNIT- 440 LBS 200kg

2) MATERIAL- GRAY IRON ASTM A48 CL35B

3) CASTING TO MEET M306 PROOF LOAD SPECIFICATION

4) EJIW V-1420 ASY OR APPROVED EQUAL

3 64 STORM SEWER MANHOLE FRAME AND COVER

NTS
COH DWG No. 02084-02

SWTP
Surface Water Transmission Program

Lockwood, Andrews & Newnam, Inc.
A LEO A DALY COMPANY
2925 Briarpark Drive Houston, TX 77042

SURVEYED BY:
KUO & ASSOCIATES, INC.
C.O.H. Field Book P-5554

ALISA GRUBER
95685
LICENSED PROFESSIONAL ENGINEER
Lockwood, Andrews & Newnam, Inc. Firm No. 2614

CITY OF HOUSTON
DEPARTMENT OF PUBLIC WORKS AND ENGINEERING

SWTP CONTRACT 74A-1

MISCELLANEOUS STORM DETAILS

WBS NO.	S-000900-0109-4
DRAWING SCALE	NOT TO SCALE
CITY OF HOUSTON PM	ARTHUR C. MORRIS, P.E.
SHEET NO.	64 OF 91

ACCEPTED AND FILED
48326
CITY DRAWING NUMBER

Revisions: No. Date Appd

12/28/2010 4:25:53 PM Jmusku

L:\130-10337-004\4-0-Production\4-01-Drawings\CIVil\Standard Details\4064-Misc Storm Details.dgn

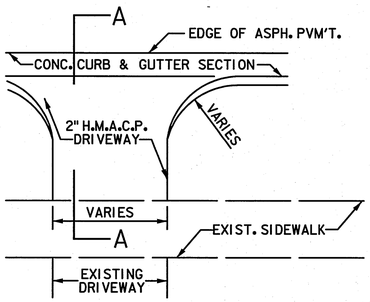

PLAN

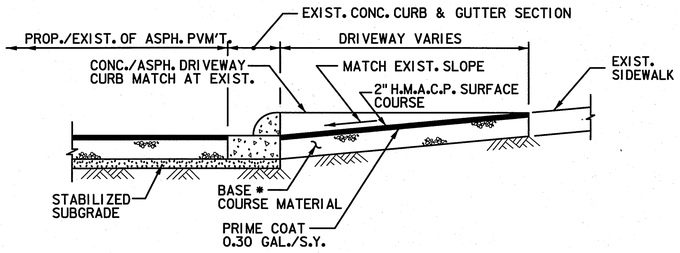

SECTION A-A

1/65 ASPHALT DRIVEWAY DETAIL

NTS

* BASE COURSE MATERIAL SHALL CONSIST OF THE FOLLOWING OPTIONS :

1. 4" (MIN) HOT MIX ASPHALTIC CONCRETE.
2. 8" (MIN) RECYCLED CRUSHED CONCRETE BASE COURSE.

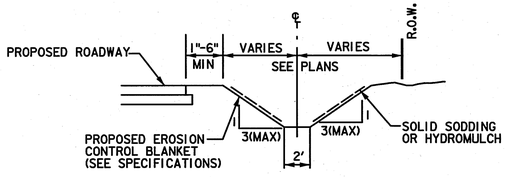

2/65 TYPICAL DITCH SECTION

NTS

NOTES:

1. STEEPER SIDE SLOPES AND NARROWER BOTTOM WIDTH WILL BE ALLOWED IN LOCALIZED AREAS WHERE A 3:1 SLOPE OR 2' BOTTOM WIDTH WILL DISTURB EXISTING LANDSCAPING (OTHER THAN GRASS) OR PAVEMENT AND ONLY AS APPROVED BY PROJECT MANAGER.
2. ALL GRADE TRANSITIONS SHALL BE SMOOTH.
3. HAND EXCAVATE IN AREAS INDICATED IN PLANS, AND NEAR TREES AND ROOTS.
4. ALL TREES SHALL REMAIN INTACT, EXCEPT TREES IN AREAS WHERE CLEARING IS NECESSARY AND SPECIFICALLY APPROVED FOR REMOVAL BY CITY ENGINEER.
5. MINIMUM LONGITUDINAL SLOPE FOR DITCH SECTION TO BE 0.10%. DEPTH OF DITCH SECTION TO BE MINIMUM 1.5 FEET DEEP AND MAXIMUM OF 4.0 DEEP.

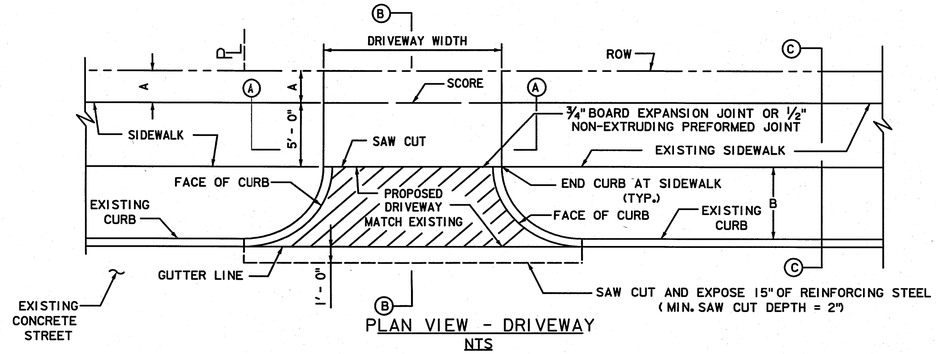

PLAN VIEW - DRIVEWAY

NTS

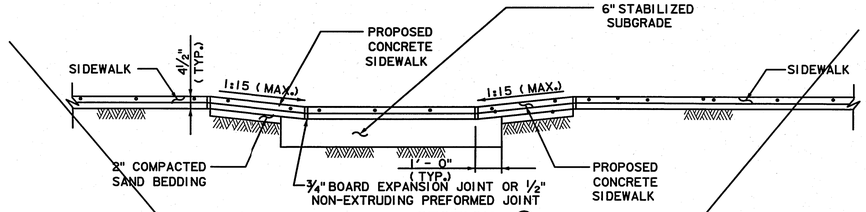

SECTION Ⓐ

PROPOSED SIDEWALK THROUGH DRIVEWAY WITH EXCESSIVE ELEVATION DIFFERENCE WITH EXISTING SIDEWALK

NTS

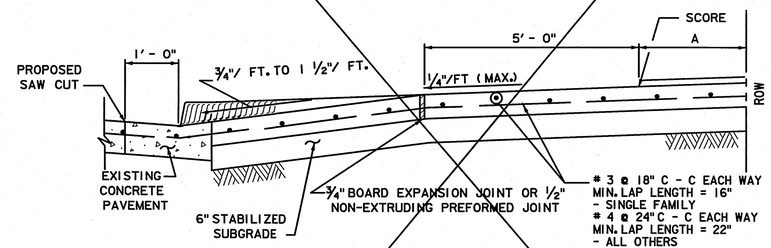

SECTION Ⓑ

TYPICAL DRIVEWAY SECTION

NTS

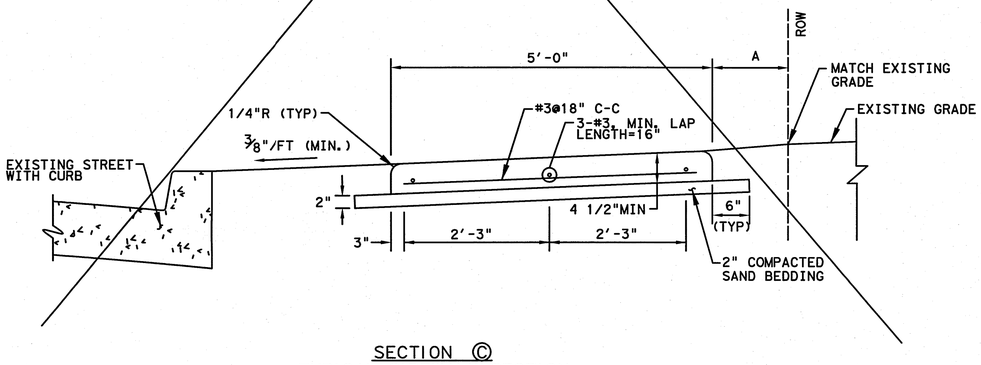

SECTION Ⓒ

TYPICAL SIDEWALK SECTION

NTS

3/65 REINFORCED CONCRETE DRIVEWAY DETAILS ON CURBED TYPE STREETS

NTS

NOTES:

1. IF AVAILABLE ROW IS NOT SUFFICIENT TO ACCOMMODATE A 5-FEET SIDEWALK, ENGINEER SHALL OBTAIN A VARIANCE FROM THE CITY ENGINEER FOR A 4-FEET WIDE SIDEWALK.
2. DRIVEWAYS SHALL BE 6" THICK FOR SINGLE FAMILY USE AND 7" THICK FOR ALL OTHERS (I.E. COMMERCIAL, INDUSTRIAL, ETC.)
3. DRIVEWAYS AND SIDEWALKS SHALL BE CONSTRUCTED WITH PORTLAND CEMENT CONCRETE AND INCLUDE 5-1/2 SACKS OF CEMENT PER CUBIC YARD OF CONCRETE.
4. 6x6-W2.9xW2.9 WELDED WIRE FABRIC MAY BE USED IN LIEU OF THE REINFORCING STEEL.
5. EXPANSION & CONSTRUCTION JOINTS ALONG SIDEWALKS SHALL BE ACCORDING TO DRAWING No. 02752-02.
6. REFER CHAPTER 10 DESIGN REQUIREMENTS FOR A AND B.

SWTP
Surface Water Transmission Program

Lockwood, Andrews & Newnam, Inc.
A LEO A DALY COMPANY
2925 Briarpark Drive Houston, TX 77042

SURVEYED BY:
KUO & ASSOCIATES, INC.
C.O.H. Field Book P-5554

STATE OF TEXAS
ALISA GRUBER
95685
LICENSED PROFESSIONAL ENGINEER
Lockwood, Andrews & Newnam, Inc. Firm No. 2614

CITY OF HOUSTON
DEPARTMENT OF PUBLIC WORKS AND ENGINEERING

SWTP CONTRACT 74A-1

DRIVEWAY AND DITCH DETAILS

WBS NO.	S-000900-0109-4
DRAWING SCALE	NOT TO SCALE
CITY OF HOUSTON PM	ARTHUR C. MORRIS, P.E.
SHEET NO.	65 OF 91

ACCEPTED AND FILED
48326
CITY DRAWING NUMBER
HOUSTON TEXAS

No. Date Revisions Appd.

1/3/2011 11:19:03 PM JmusKu

I:\130-11237-02\4-Production\4-01-drawings\civil\standard details\4085-Driveway & Ditch Detail1.dgn

DRIVEWAY SCHEDULE

DESIGNATED WITH ◇XX◇ IN PLANS

DRIVEWAY	DRIVEWAY CENTERLINE STATION	EXISTING WIDTH (FT)	EXISTING LENGTH (1) (FT)	EXISTING SURFACE	PROPOSED SURFACE (2)
1	3+92	18	11	CONCRETE	CONCRETE
2	4+53	17	11	CONCRETE	CONCRETE
3	5+15	17	11	CONCRETE	CONCRETE
4	5+77	17	11	CONCRETE	CONCRETE
5	6+38	17	11	CONCRETE	CONCRETE
6	8+15	17	11	CONCRETE	CONCRETE
7	8+50	18	11	CONCRETE	CONCRETE
8	8+90	16	11	CONCRETE	CONCRETE
9	9+85	19	17	CONCRETE	CONCRETE
10	13+88	17	11	CONCRETE	CONCRETE
11	14+45	17	11	CONCRETE	CONCRETE
12	15+03	17	11	CONCRETE	CONCRETE
13	15+63	17	11	CONCRETE	CONCRETE
14	16+22	17	11	CONCRETE	CONCRETE
15	16+70	17	11	CONCRETE	CONCRETE
16	17+30	17	11	CONCRETE	CONCRETE
17	17+88	17	11	CONCRETE	CONCRETE
18	18+43	17	11	CONCRETE	CONCRETE
19	19+03	18	11	CONCRETE	CONCRETE
20	19+64	19	10	CONCRETE	CONCRETE
21	20+28	17	10	CONCRETE	CONCRETE
22	20+86	18	10	CONCRETE	CONCRETE
23	21+46	18	10	CONCRETE	CONCRETE
24	22+09	18	10	CONCRETE	CONCRETE
25	22+68	17	10	CONCRETE	CONCRETE
26	23+29	17	10	CONCRETE	CONCRETE
27	23+60	17	11	CONCRETE	CONCRETE
28	24+48	18	10	CONCRETE	CONCRETE
29	25+09	17	10	CONCRETE	CONCRETE
30	25+69	17	10	CONCRETE	CONCRETE
31	26+30	17	10	CONCRETE	CONCRETE
32	27+12	17	10	CONCRETE	CONCRETE
33	27+76	17	10	CONCRETE	CONCRETE
34	28+40	17	11	CONCRETE	CONCRETE
35	29+04	17	10	CONCRETE	CONCRETE
36	29+67	17	10	CONCRETE	CONCRETE
37	30+31	17	10	CONCRETE	CONCRETE
38	30+95	18	10	CONCRETE	CONCRETE
39	33+33	17	10	CONCRETE	CONCRETE
40	35+22	18	10	CONCRETE	CONCRETE
41	35+65	18	10	CONCRETE	CONCRETE
42	35+97	17	8	CONCRETE	CONCRETE
43	36+83	17	9	CONCRETE	CONCRETE
44	37+44	17	9	CONCRETE	CONCRETE
45	38+05	17	9	CONCRETE	CONCRETE
46	38+63	17	9	CONCRETE	CONCRETE
47	39+17	18	9	CONCRETE	CONCRETE
48	39+55	17	9	CONCRETE	CONCRETE

FOOTNOTES: (1) FROM EXISTING EDGE OF PAVEMENT TO FRONT OF SIDEWALK

(2) PROPOSED SURFACE WIDTH TO MATCH EXISTING, UNLESS OTHERWISE SHOWN ON DRAWINGS

(3) SEE DETAIL "REINFORCED CONCRETE DRIVEWAY DETAIL ON CURBED TYPE STREETS"

* PAVEMENT FOR BIDDING PURPOSES ONLY *

PROPOSED PAVEMENT THICKNESS & MATERIAL	STATION	STREET
7" CONCRETE	2+00 TO 8+30	COACHCREEK DR.
7" CONCRETE	8+30 TO 13+50	WOOD RIVER DR.
7" CONCRETE	13+50 TO 32+00	RIVER BLUFF DR.
7" CONCRETE	32+00 TO 33+30	SUMMIT RIDGE DR.
7" CONCRETE	33+30 TO 40+50	RIVER BLUFF DR.
7" CONCRETE	40+50 TO 46+75	CHIMNEY ROCK RD.
8" CONCRETE	46+75 TO 48+00	WEST OREM DR.

NOTES:

1. ROADWAY EXCAVATION, SITE GRADING, AND HYDROMULCH SEEDING OR SODDING WITHIN RIGHT OF WAY LIMITS IS INCIDENTAL. APPLY COST TO APPROPRIATE PAVING ITEM.
2. MEASUREMENT AND PAYMENTS (INCLUDING DRIVEWAYS) SHALL BE AS PER SPECIFICATION SECTIONS UNLESS OTHERWISE SHOWN ON BID FORM.
3. STREETS OR DRIVEWAYS SHALL BE REPAIRED OR REPLACED AS INDICATED ON DRAWINGS, ACCORDING TO PAVEMENT REPLACEMENT SCHEDULE SHOWN ABOVE, OR AS DIRECTED BY ENGINEER.
4. APPLICABLE TO EXISTING CONCRETE AREAS THAT REQUIRE REMOVAL AND REPLACEMENT OF CONCRETE DUE TO OPEN TRENCH CONSTRUCTION.

SWTP
Surface Water Transmission Program

Lockwood, Andrews & Newnam, Inc.
A LEO A DALY COMPANY
2925 Briarpark Drive Houston, TX 77042

SURVEYED BY:
KUO & ASSOCIATES, INC.
C.O.H. Field Book P-5554

STATE OF TEXAS
ALISA GRUBER
95685
LICENSED PROFESSIONAL ENGINEER
1-3-11
Lockwood, Andrews & Newnam, Inc. Firm No. 2614

CITY OF HOUSTON
DEPARTMENT OF PUBLIC WORKS AND ENGINEERING

SWTP CONTRACT 74A-1

PAVEMENT AND DRIVEWAY SCHEDULE

WBS NO.
S-000900-0109-4

DRAWING SCALE
NOT TO SCALE

CITY OF HOUSTON PM
ARTHUR C. MORRIS, P.E.

SHEET NO. 66 OF 91

PUBLIC WORKS AND ENGINEERING
ACCEPTED AND FILED
48326
CITY DRAWING NO.
HOUSTON TEXAS

No. Date Revisions App.

12/29/2010 4:25:55 PM jmusku

I:\130-1037-004\4-0-production\4-01-drawings\civil\standard details\066 Pavement and Driveway Schedule.dgn

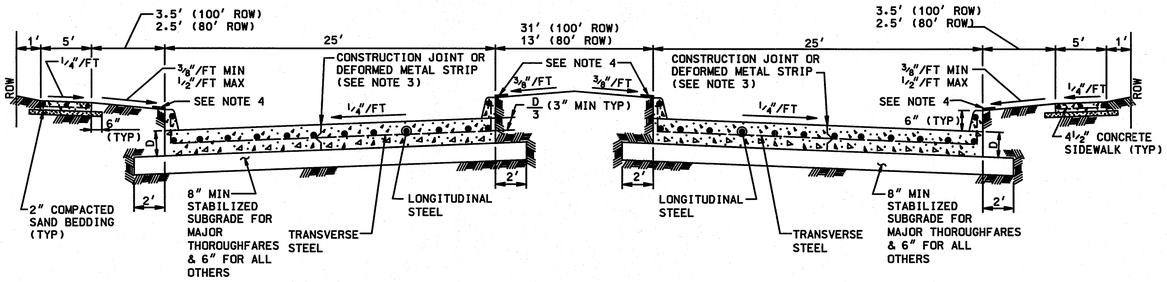

4/67 TYPICAL DOUBLE ROADWAY SECTION FOR CONCRETE PAVEMENT WITH CURBS

C.O.H. DWG. NO. 02751-01

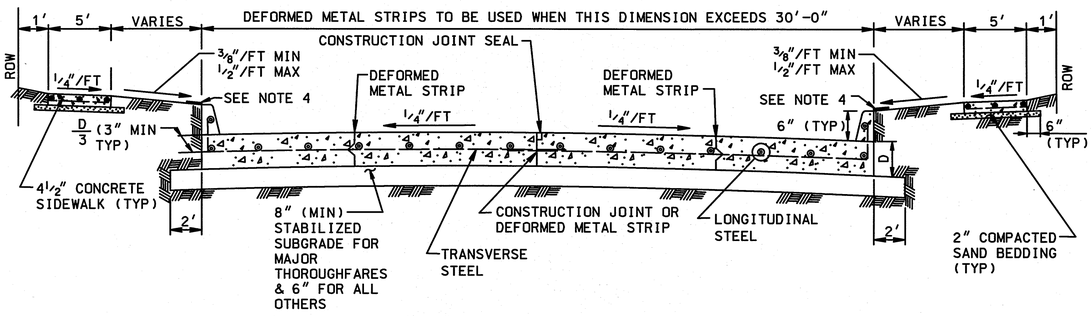

1/67 TYPICAL SINGLE ROADWAY SECTION FOR CONCRETE PAVEMENT WITH CURBS

C.O.H. DWG. NO. 02751-01

NOTES:

1. THE MAXIMUM WIDTH BETWEEN LONGITUDINAL JOINTS SHALL NOT EXCEED 15'-0".
2. ALL EARTHEN AREAS ARE TO BE HYDROMULCHED UNLESS SHOWN OTHERWISE ON DRAWINGS.
3. CONTRACTOR MAY SAW CUT IN LIEU OF DEFORMED METAL STRIP.
4. USE STRIP OF SOD GRASS TO PREVENT EROSION UNTIL STAND OF GRASS IS ESTABLISHED.
5. AN EQUAL OR LARGER AREA OF WELDED REINFORCEMENT BAR CONFORMING TO ASTM A497. MAY BE SUBSTITUTED FOR REBARS LISTED IN TABLE 1.
6. IF AVAILABLE ROW IS NOT SUFFICIENT TO ACCOMMODATE A 5-FEET SIDEWALK, ENGINEER SHALL OBTAIN A VARIANCE FORM THE CITY ENGINEER FOR A 4-FEET WIDE SIDEWALK.

TABLE 1

REINFORCING STEEL BAR SIZES AND SPACINGS
FOR VARIOUS PAVEMENT THICKNESSES (D) WITH:
MAXIMUM EXPANSION JOINT SPACING = 80 FT.
fc' = 3,500 PSI / 28 DAYS AND fy = 60,000 PSI

PAVEMENT THICKNESS D (IN)	PAVEMENT WIDTH (FT)	LONGITUDINAL STEEL									TRANSVERSE STEEL		
		# 4 BARS			# 5 BARS			# 6 BARS			# 4 BARS	# 5 BARS	# 6 BARS
		NUMBER OF BARS	SPACING (IN)	END BAR SPACING (IN)	NUMBER OF BARS	SPACING (IN)	END BAR SPACING (IN)	NUMBER OF BARS	SPACING (IN)	END BAR SPACING (IN)	SPACING (IN)	SPACING (IN)	SPACING (IN)
6	28	17	20.50	4	–	–	–	–	–	–	36	–	–
7	25	17	18.25	4	–	–	–	–	–	–	36	–	–
7	35	24	18.00	3	–	–	–	–	–	–	36	–	–
7	36	25	17.75	3	–	–	–	–	–	–	36	–	–
7	37	25	18.25	3	–	–	–	–	–	–	36	–	–
7	41	28	18.00	3	–	–	–	–	–	–	36	–	–
7	45	31	17.75	3.75	–	–	–	–	–	–	36	–	–
8	25	20	15.50	2.75	13	24.50	3	–	–	–	36	36	–
8	34	27	15.50	2.5	17	25.00	4	–	–	–	36	36	–
8	35	27	16.00	2	18	24.25	4	–	–	–	36	36	–
8	36	28	15.75	3.25	18	25.00	3	–	–	–	30	36	–
8	44	34	15.75	4	22	24.75	4	–	–	–	30	36	–
8	45	35	15.75	2.25	23	24.25	3	–	–	–	30	36	–
9	25	22	14.00	3	14	22.50	4	–	–	–	36	36	–
9	34	31	13.50	2	19	22.25	3.5	–	–	–	30	36	–
9	35	31	13.75	3.75	20	21.75	3.5	–	–	–	30	36	–
9	36	32	13.75	3	21	21.25	3.5	–	–	–	30	36	–
9	44	39	13.75	2.75	25	21.75	3	–	–	–	24	36	–
9	45	39	14.00	4	26	21.25	4.5	–	–	–	24	36	–
10	25	24	12.75	3.5	17	18.25	4	–	–	–	36	36	36
10	34	33	12.50	4	21	20.00	4	–	–	–	30	36	36
10	35	34	12.50	3.75	23	18.75	4	–	–	–	30	36	36
10	36	35	12.50	3.5	24	18.50	3	–	–	–	30	36	36
10	44	44	12.00	4	29	18.50	4.5	–	–	–	24	36	36
10	45	44	12.50	3	29	19.00	3	–	–	–	24	36	36
11	25	27	11.25	3	17	18.25	4	12	26.75	3	36	36	36
11	34	36	11.50	2.75	24	17.50	2.5	17	25.00	4	24	36	36
11	35	37	11.50	3	24	18.00	3	17	25.75	4	24	36	36
11	36	40	11.00	2	25	17.75	3	17	26.50	4	24	36	36
11	44	48	11.125	2.5	30	18.00	3	21	26.00	4	24	36	36
11	45	49	11.125	3	31	17.75	4	22	25.50	3	24	36	36
12	25	–	–	–	19	16.25	4	13	24.50	3	36	36	36
12	34	–	–	–	26	16.00	4	18	23.50	4	24	36	36
12	35	–	–	–	26	16.50	4	19	23.00	3	24	36	36
12	36	–	–	–	27	16.25	4.5	20	22.25	4.5	24	36	36
12	44	–	–	–	33	16.25	4	24	22.50	5	24	30	36
12	45	–	–	–	35	15.75	3	25	22.25	3	24	30	36

MINIMUM LAP LENGTHS (L):
A. # 4 BARS: L = 22 INCHES
B. # 5 BARS: L = 27 INCHES
C. # 6 BARS: L = 32 INCHES

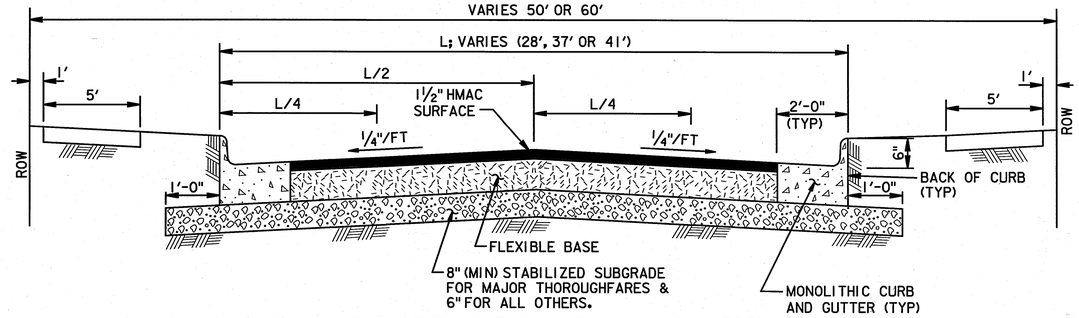

FLEXIBLE BASE PAVEMENT-CURB & GUTTER SECTION

(NOT APPLICABLE TO ETJ OF CITY OF HOUSTON)

NOTE:

1. FLEXIBLE BASE SHALL BE:
   ALTERNATES: 1. 6" (MIN) HOT MIX ASPHALTIC CONCRETE.
   2. 8" (MIN) CRUSHED CONCRETE.

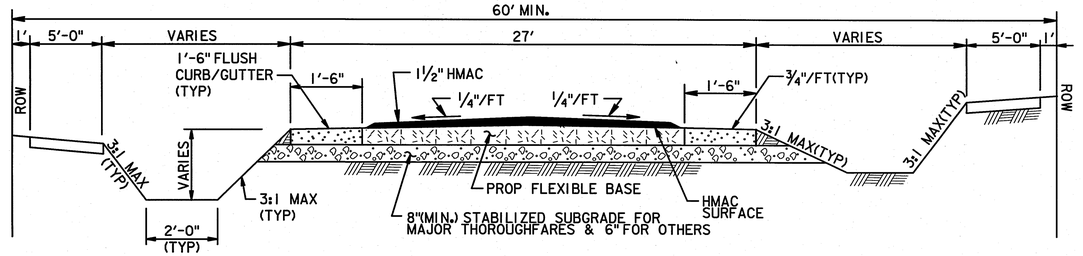

FLEXIBLE BASE PAVEMENT - DITCH SECTION

(NOT APPLICABLE TO ETJ OF CITY OF HOUSTON)

NOTE:

FLEXIBLE BASE SHALL BE:
ALTERNATES: 1. 6" (MIN) HOT MIX ASPHALTIC CONCRETE
2. 8" (MIN) CRUSHED CONCRETE

2/67 HOT-MIX ASPHALTIC CONCRETE PAVEMENT

C.O.H. DWG. NO. 02741-01

SWTP
Surface Water Transmission Program

Lockwood, Andrews & Newnam, Inc.
A LEO A DALY COMPANY
2925 Briarpark Drive Houston, TX 77042

STATE OF TEXAS
ALISA GRUBER
95685
LICENSED PROFESSIONAL ENGINEER
Lockwood, Andrews & Newnam, Inc. Firm No. 2614

SURVEYED BY:
KUO & ASSOCIATES, INC.
C.O.H. Field Book P-5554

CITY OF HOUSTON
DEPARTMENT OF PUBLIC WORKS AND ENGINEERING

SWTP CONTRACT 74A-1

PAVEMENT DETAILS
SHEET 1 OF 3

WBS NO.	S-000900-0109-4
DRAWING SCALE	NOT TO SCALE
CITY OF HOUSTON PM	ARTHUR C. MORRIS, P.E.
SHEET NO.	67 OF 91

ACCEPTED AND FILED
48326
CITY DRAWING NUMBER

No. Date Revisions App.

12/28/2010

I:\130-10337-004\4-0-production\4-01-drawings\civil\standard details\067-Paving Details 1 of 3.dgn
12/28/2010 4:25:56 PM jmusku

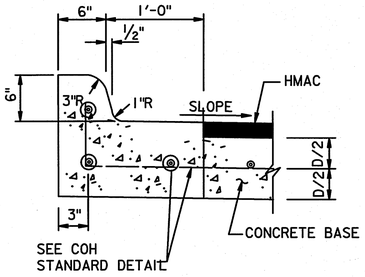

ESPLANADE CURB CONNECTED TO CONCRETE BASE

1/68 — C.O.H. DWG. NO. 02771-01

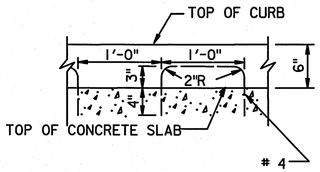

ALTERNATE CONCRETE CURB REINFORCEMENT

4/68 — C.O.H. DWG. NO. 02771-01

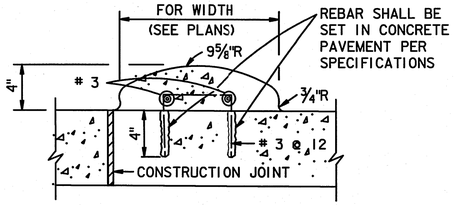

MOUNTABLE CURB

5/68 — C.O.H. DWG. NO. 02771-01

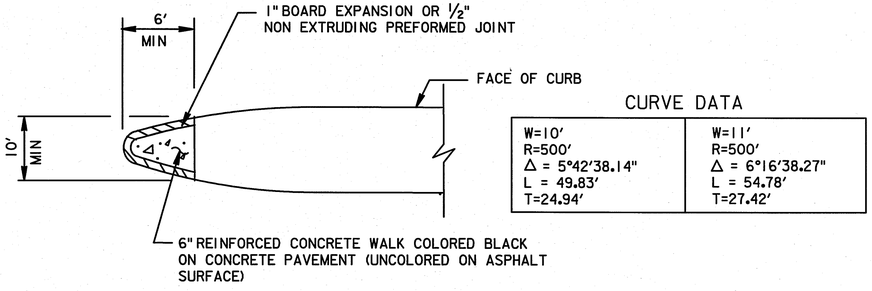

CURVE DATA

W=10' R=500' Δ = 5°42'38.14" L = 49.83' T=24.94'	W=11' R=500' Δ = 6°16'38.27" L = 54.78' T=27.42'

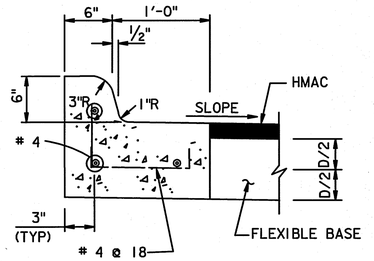

ESPLANADE CURB CONNECTED TO FLEXIBLE BASE

2/68 — C.O.H. DWG. NO. 02771-01

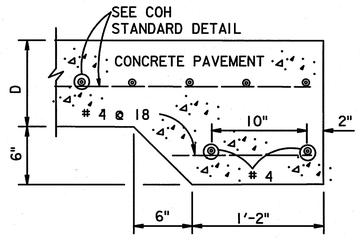

STANDARD RAILROAD HEADER

6/68 — C.O.H. DWG. NO. 02771-01

ESPLANADE NOSE

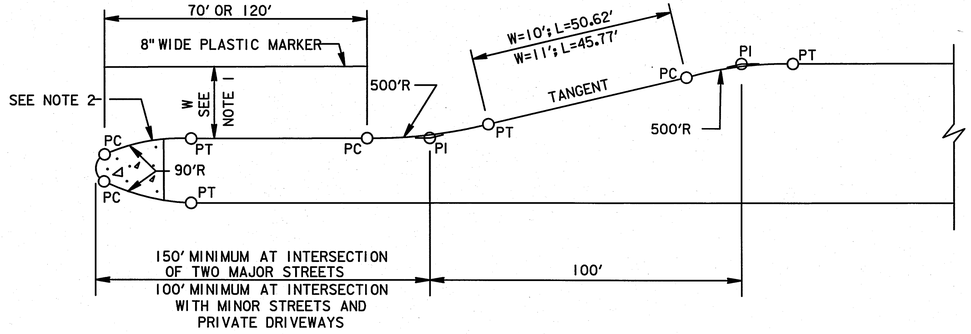

DETAIL OF LEFT TURN LANE

NOTES:

1. 10 FT FOR 80 FT ROW; 11 FT FOR 100 FT ROW.
2. FOR MEDIANS WITH BULLET NOSE CONFIGURATION, PAINT CURB WITH YELLOW REFLECTORIZED PAINT AROUND THE ESPLANADE NOSE TO THE PT OF THE 90 FT R. FOR MEDIANS WITHOUT BULLET NOSE CONFIGURATION, PAINT CURB FROM PC TO PT AND 30 FT BACK OF PC/PT.

9/68 — ESPLANADE NOSE AND LEFT TURN DETAILS

C.O.H. DWG. NO. 02772-01

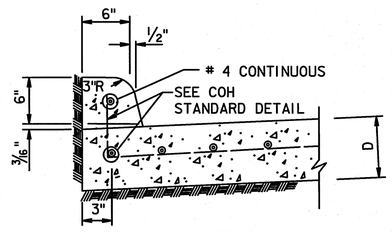

CONCRETE CURB

NOTE:
WHEN CONCRETE CURB IS TO BE PLACED EXISTING CONCRETE USE BASE #4 @ 18x10" LONG, DOWELLED AND SET IN EPOXY GROUT.
SET #4 DOWELLS, 25" LONG AT 12" C-C WHEN PAVEMENT SECTION POURED.

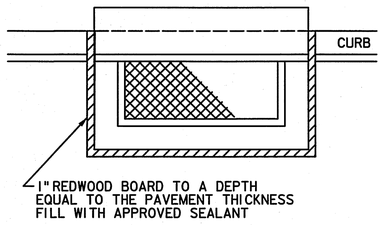

PLAN VIEW – CURB INLET

7/68

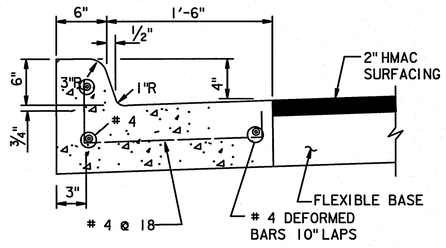

MONOLITHIC CURB AND GUTTER

3/68 — C.O.H. DWG. NO. 02771-01

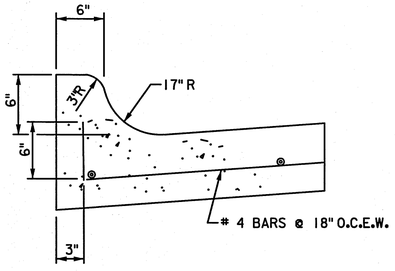

MOUNTABLE CURB TYPE II DETAIL

8/68

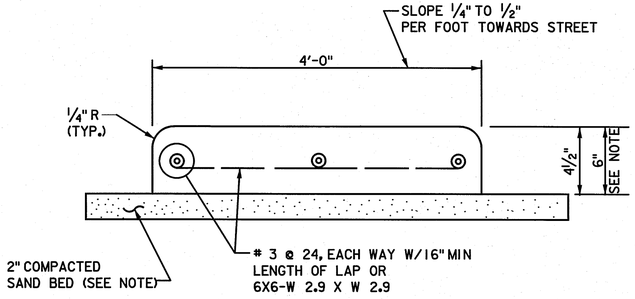

CONCRETE SIDEWALK

10/68

NOTE:

6" REINFORCED CONCRETE SIDEWALK THRU DRIVEWAY OPENINGS ONLY.
USE # 3 @ 11, EACH WAY-16" MIN LAP LENGTH
OR # 4 @ 20, EACH WAY -22" MIN LAP LENGTH.
PROVIDE 6" STABILIZED SUBGRADE IN DRIVEWAY OPENING.

SWTP
Surface Water Transmission Program

Lockwood, Andrews & Newnam, Inc.
A LEO A DALY COMPANY
2925 Briarpark Drive Houston, TX 77042

SURVEYED BY:
KUO & ASSOCIATES, INC.
C.O.H. Field Book P-5554

STATE OF TEXAS
ALISA GRUBER
95685
LICENSED PROFESSIONAL ENGINEER
Lockwood, Andrews & Newnam, Inc.
Firm No. 2614

CITY OF HOUSTON
DEPARTMENT OF PUBLIC WORKS AND ENGINEERING

SWTP CONTRACT 74A-1

PAVEMENT DETAILS
SHEET 2 OF 3

WBS NO.	S-000900-0109-4
DRAWING SCALE	NOT TO SCALE
CITY OF HOUSTON PM	ARTHUR C. MORRIS, P.E.
SHEET NO.	68 OF 91

PUBLIC WORKS AND ENGINEERING
ACCEPTED AND FILED
48326
CITY DRAWING NUMBER
HOUSTON, TEXAS

Asp. | Revisions | No. | Date | 12/29/2010 4:25:56 PM jmusiku

I:\130-10337-004\v4-0-production\civil-01-drawings\civil\standard details\068-Pavement Details 2 of 3.dgn

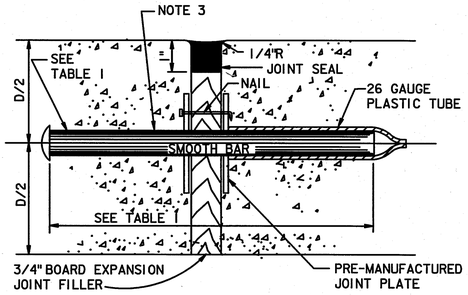

SECTION
DOWEL TYPE EXPANSION JOINT
N.T.S

NOTES:

1. STEEL TO MEET ASTM STANDARD SPECIFICATIONS FOR CONCRETE REINFORCING BARS. UNITS TO BE SPACED ON 12" CENTERS.
2. EXPANSION JOINT TO BE PLACED AT THE END OF EACH CURB RADIUS.
3. CENTER DOWEL HORIZONTALLY ON JOINT.
4. CENTER DOWEL VERTICALLY IN CONCRETE BASE. EXTEND THICKENED CONCRETE AS NEEDED TO MAINTAIN 3" MIN. COVER.
5. CITY OF HOUSTON APPROVED PRODUCTS MAY BE USED AS JOINT PLATE ALTERNATIVE
6. FOR PAVEMENT LESS THAN 7" THICK, SEE NON DOWELED JOINT DETAIL

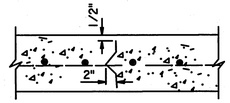

SECTION
DEFORMED METAL STRIP
N.T.S.

TABLE I

PAVEMENT THICKNESS (IN)	DOWEL SIZES AND SPACINGS		
	DIAMETER (IN)	LENGTH (IN)	SPACING (IN)
6	3/4	18	12
7	1	18	12
8	1	18	12
9	1 1/4	18	12
10	1 1/4	18	12
11	1 1/4	18	12
12	1 1/4	18	12

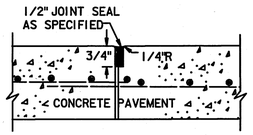

SECTION
CONSTRUCTION JOINT SEAL
N.T.S.

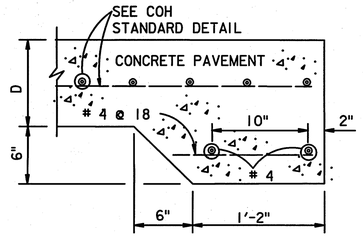

2/69 NON DOWELED JOINT
NTS

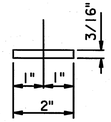

PLAN - JOINT PLATE

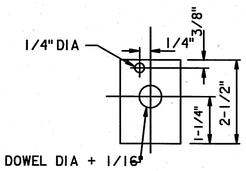

ELEVATION – JOINT PLATE
N.T.S.

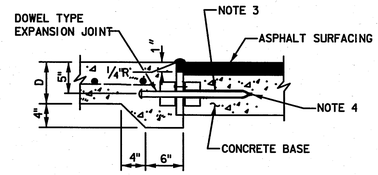

3/69 EXPANSION JOINT – CONCRETE PAVEMENT TO CONCRETE BASE
NTS

1/69 PAVEMENT EXPANSION AND CONSTRUCTION JOINT DETAILS
C.O.H. DWG. NO. 02752-01
NTS

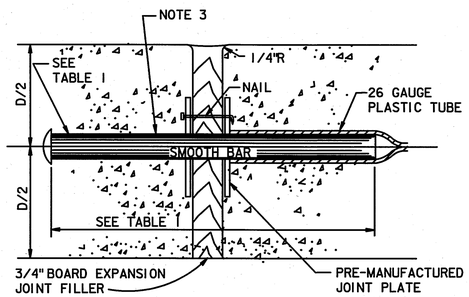

SECTION
DOWEL TYPE EXPANSION JOINT
N.T.S

TABLE I

PAVEMENT THICKNESS (IN)	DOWEL SIZES AND SPACINGS		
	DIAMETER (IN)	LENGTH (IN)	SPACING (IN)
4 1/2	1/2	18	12
5	1/2	18	12
6	3/4	18	12
7	1	18	12

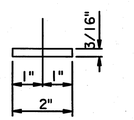

PLAN - JOINT PLATE

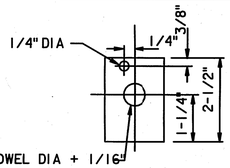

ELEVATION - JOINT PLATE
N.T.S.

NOTES:

1. STEEL TO MEET ASTM STANDARD SPECIFICATIONS FOR CONCRETE REINFORCING BARS.
2. EXPANSION JOINT TO BE PLACED AT THE END OF EACH CURB RADIUS AND SPACED AT A MAXIMUM DISTANCE OF 36' FEET. MAXIMUM SPACING FOR CONTROL JOINTS SHALL BE 5' FEET.
3. CENTER DOWEL HORIZONTALLY ON JOINT.
4. CENTER DOWEL VERTICALLY IN CONCRETE AS NEEDED TO MAINTAIN 2" MIN. COVER.

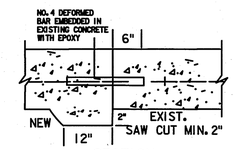

SECTION
SIDEWALK TO EXISTING SIDEWALK

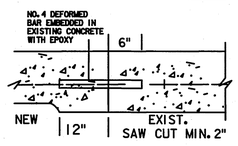

SECTION
SIDEWALK TO EXISTING DRIVEWAY

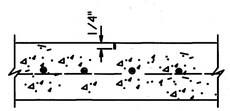

SECTION
CONTROL JOINT
N.T.S.

4/69 SIDEWALK EXPANSION AND CONSTRUCTION JOINT DETAILS
C.O.H. DWG. NO. 02752-02
NTS

SWTP
Surface Water Transmission Program

Lockwood, Andrews & Newnam, Inc.
A LEO A DALY COMPANY
2925 Briarpark Drive Houston, TX 77042

SURVEYED BY:
KUO & ASSOCIATES, INC.
C.O.H. Field Book P-5554

STATE OF TEXAS
ALISA GRUBER
95685
LICENSED PROFESSIONAL ENGINEER
1-3-11
Lockwood, Andrews & Newnam, Inc. Firm No. 2614

CITY OF HOUSTON
DEPARTMENT OF PUBLIC WORKS AND ENGINEERING

SWTP CONTRACT 74A-1

PAVEMENT DETAILS
SHEET 3 OF 3

WBS NO.	S-000900-0109-4
DRAWING SCALE	NOT TO SCALE
CITY OF HOUSTON PM	ARTHUR C. MORRIS, P.E.
SHEET NO.	69 OF 91

PUBLIC WORKS AND ENGINEERING
ACCEPTED AND FILED
48326
CITY DRAWING NUMBER
HOUSTON, TEXAS

No. Date Revisions Appd.

1/3/2011 11:19:03 PM jmusku

I:\1350-1033-004\4-0-product\cnvt-01-drawings\civil\standard details\069-Pavement Details 3 of 3.dgn

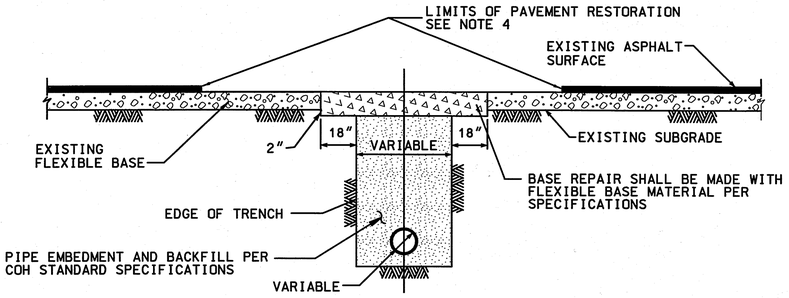

SECTION (A)

REPAIR OF FLEXIBLE BASE PAVEMENT

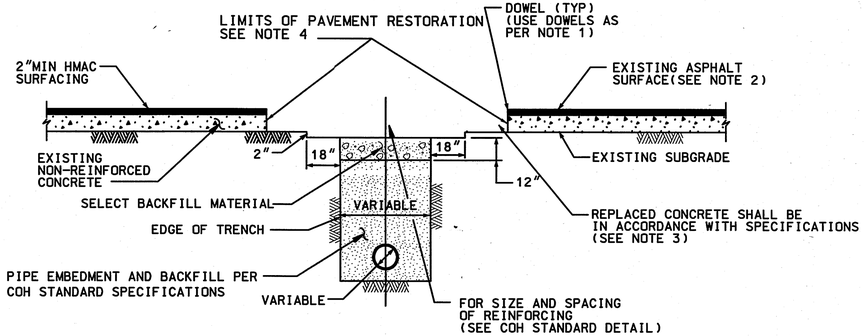

SECTION (C)

REPAIR OF NON-REINFORCED CONCRETE PAVEMENT

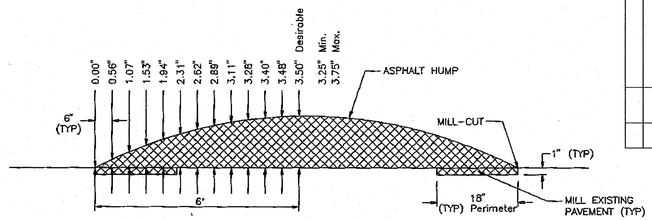

CROSS SECTION A–A

(N.T.S.)

FOR ASPHALT OR CONCRETE STREETS

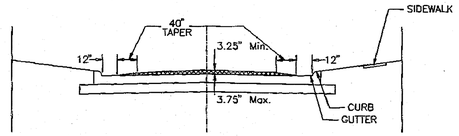

CROSS SECTION B–B

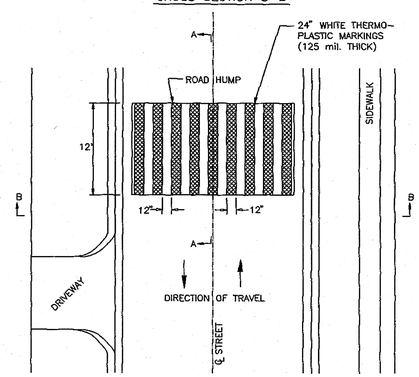

PLAN

3/70 SPEED HUMP FOR CURB AND GUTTER DETAIL

NTS

C.O.H. DWG. NO. 02741-02

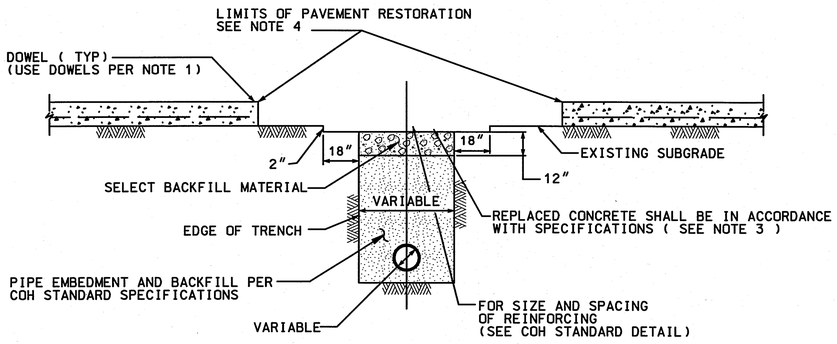

SECTION (B)

REPAIR OF REINFORCED CONCRETE PAVEMENT

NOTE:

1. PROVIDE FULL DEPTH SAW CUT WITH DOWELS. HORIZONTAL DOWELS SHALL BE # 6 BARS, 24" LONG, 24" C-C, DRILLED AND EMBEDDED 8" INTO THE CENTER OF THE EXISTING SLAB WITH "PO ROC" OR EQUAL.
2. IF REINFORCED CONCRETE IS OVERLAYED WITH ASPHALT, REPLACE WITH 2" MIN. HMAC SURFACING.
3. REFER TO STANDARD DETAIL 02751-01 FOR REINFORCING STEEL REQUIREMENTS.
4. REFER TO STREET CUT DETAILS SHEET (SHT 71 OF 91) FOR PAVEMENT RESTORATION LIMITS.

1/70 PAVEMENT REPAIR DETAILS FOR STREET CUTS

NTS

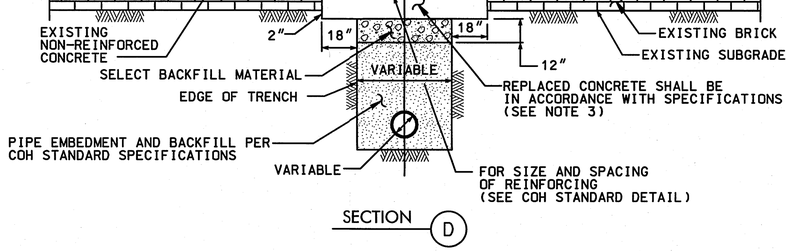

SECTION (D)

REPAIR OF NON-REINFORCED CONCRETE PAVEMENT WITH BRICK

NOTE:

1. FULL DEPTH SAW CUT WITH DOWELS. HORIZONTAL DOWELS SHALL BE # 6 BARS, 24" LONG, 24" C-C, DRILLED AND EMBEDDED 8" INTO THE CENTER OF THE EXISTING SLAB WITH "PO ROC" OR EQUAL.
2. IF REINFORCED CONCRETE IS OVERLAYED REPLACE WITH SAME THICKNESS OF HMAC SURFACING.
3. REFER TO STANDARD DETAIL 02751-01 FOR REINFORCING STEEL REQUIREMENT
4. REFER TO STREET CUT DETAILS SHEET (SHT 71 OF 91) FOR PAVEMENT RESTORATION LIMITS.

2/70 PAVEMENT REPAIR DETAILS FOR STREET CUTS NON REINFORCED CONCRETE AND BRICK PAVEMENT

NTS

SWTP
Surface Water Transmission Program

Lockwood, Andrews & Newnam, Inc.
A LEO A DALY COMPANY
2925 Briarpark Drive Houston, TX 77042

STATE OF TEXAS
ALISA GRUBER
95685
LICENSED PROFESSIONAL ENGINEER
1-14-11
Lockwood, Andrews & Newnam, Inc. Firm No. 2614

SURVEYED BY:
KUO & ASSOCIATES, INC.
C.O.H. Field Book P-5554

CITY OF HOUSTON
DEPARTMENT OF PUBLIC WORKS AND ENGINEERING

SWTP CONTRACT 74A-1

PAVEMENT REPAIR DETAILS

WBS NO.	S-000900-0109-4
DRAWING SCALE	NOT TO SCALE
CITY OF HOUSTON PM	ARTHUR C. MORRIS, P.E.
SHEET NO.	70 OF 91

PUBLIC WORKS AND ENGINEERING
ACCEPTED AND FILED
48326
PLANNING BUREAU
TEXAS

Revisions

No.	Date	App.

1/14/2011 1:21:13 PM Jmusiku

L:\130-1033-00A\4-0-Production\4-01-Drawings\Civil\Standard Details\070-Pavement Repair Details.dgn

CONCRETE PAVEMENT RESTORATION

AGE OF PAVEMENT LESS THAN OR EQUAL TO 5 YEARS

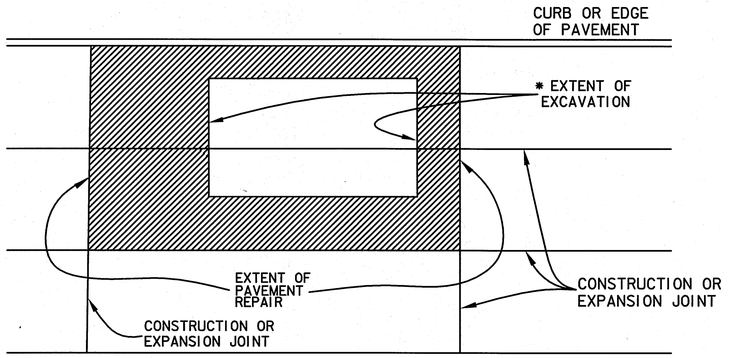

NOTES:

* EXTENT OF EXCAVATION INCLUDES 18" OVERCUT AS SHOWN ON STANDARD DETAILS 1 & 2, SHEET 70.

1. EXTENT OF PAVEMENT REPAIR SHALL BE PERPENDICULAR AND PARALLEL TO TRAVEL WAY.
2. REPLACE ENTIRE PANEL WIDTH AND LENGTH TO NEAREST CONSTRUCTION OR EXPANSION JOINT BEYOND EDGE OF EXCAVATION.
3. FULL DEPTH SAW CUT WITH DOWELS. PROVIDE HORIZONTAL DOWELS (PER DETAILS 1 & 2, SHEET 70)
4. REPLACE CURB WHEN ADJACENT LANE IS REPLACED.
5. MAINTAIN EXPANSION JOINTS AT EXISTING LOCATIONS UNLESS OTHERWISE DIRECTED BY CITY ENGINEER.
6. SPECIALTY PAVEMENTS (IE: BRICK PAVERS) TO BE REPLACED WITH MATCHING PAVEMENT IN ALL CASES.
7. REPLACE PAVEMENT MARKINGS IN ACCORDANCE WITH CITY SPECIFICATIONS 02764 AND 02767.

(1/71) STREET CUT PAVEMENT REPLACEMENT CONCRETE PAVEMENT LESS THAN 5 YRS IN AGE

NTS

CONCRETE PAVEMENT RESTORATION

AGE OF PAVEMENT GREATER THAN 5 YEARS

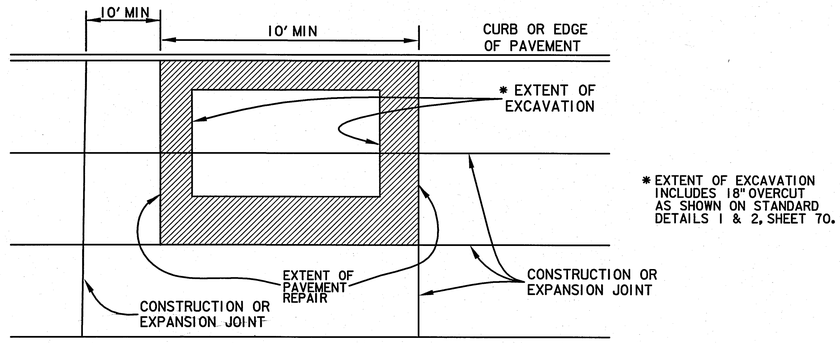

NOTES:

1. EXTENT OF PAVEMENT REPAIR SHALL BE PERPENDICULAR AND PARALLEL TO TRAVEL WAY.
2. WIDTH: REPLACE PANEL WIDTH TO NEAREST CONSTRUCTION OR EXPANSION JOINT BEYOND EDGE OF EXCAVATION.
3. LENGTH:
   a. MINIMUM LENGTH OF PAVEMENT REPAIR ALONG TRAVEL WAY IS 10' FROM THE NEAREST JOINT.
   b. IF EDGE OF EXCAVATION IS LESS THAN 10' FROM EXISTING CONSTRUCTION OR EXPANSION JOINT, REPLACE PAVEMENT TO EXISTING JOINT.
4. FULL DEPTH SAW CUT AROUND EDGE OF PANEL REPLACEMENT. PROVIDE HORIZONTAL DOWELS (PER DETAILS 1 & 2, SHEET 70).
5. REPLACE CURB WHEN ADJACENT LANE IS REPLACED.
6. MAINTAIN EXPANSION JOINTS AT EXISTING LOCATIONS UNLESS OTHERWISE DIRECTED BY CITY ENGINEER.
7. SPECIALTY PAVEMENTS (IE: BRICK PAVERS) TO BE REPLACED WITH MATCHING PAVEMENT. IN ALL CASES.
8. REPLACE PAVEMENT MARKINGS IN ACCORDANCE WITH CITY SPECIFICATIONS. 02764 AND 02767.

(2/71) STREET CUT PAVEMENT REPLACEMENT CONCRETE PAVEMENT OVER 5 YRS IN AGE

NTS

ASPHALT PAVEMENT RESTORATION

FOR PAVEMENT OF ALL AGES

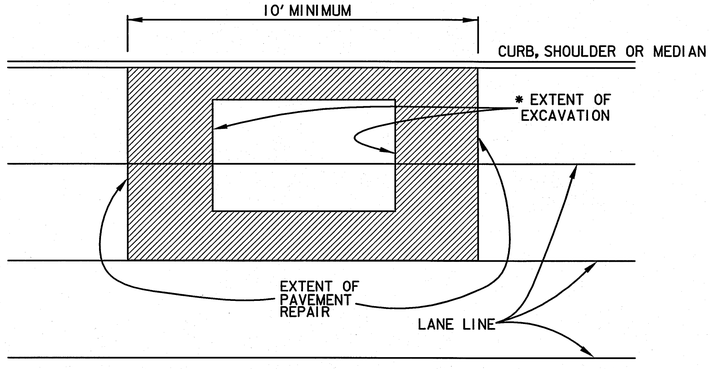

NOTES:

1. EXTENT OF PAVEMENT REPAIR SHALL BE PERPENDICULAR AND PARALLEL TO TRAVEL WAY.

2. FLEXIBLE BASE:

1. REPLACE BASE TO SAME THICKNESS PLUS TWO INCHES (2") FOR EXTENT OF EXCAVATION. USE APPROVED BASE MATERIAL TYPE. *

3. SURFACE COURSE:

A. WIDTH: SURFACE MILL AND OVERLAY FULL WIDTH OF LANE(S) TO NEAREST LANE DIVIDER BEYOND EDGE OF EXCAVATION.

B. LENGTH: MINIMUM LENGTH OF SURFACE MILL ALONG TRAVEL WAY IS 10'.

C. REPLACE PAVEMENT MARKINGS IN ACCORDANCE WITH CITY SPECIFICATIONS 02764 & 02767

ADDITIONAL REQUIREMENTS FOR ASPHALT OVERLAY ON CONCRETE PAVEMENT:

1. REPLACE CONCRETE FOR EXTENT OF EXCAVATION. REPLACE TO SAME THICKNESS PLUS TWO INCHES (2").
2. WIDTH: IF EXCAVATION EXTENDS MORE THAN HALF OF A LANE, REPLACE ENTIRE LANE OF CONCRETE. OTHERWISE USE DETAILS 1 & 2, SHEET 70.
3. FULL DEPTH SAW CUT AROUND EDGE OF CONCRETE REPLACEMENT. USE HORIZONTAL DOWELS PER DETAILS 1 & 2, SHEET 70.
4. REPLACE CURB WHEN ADJACENT LANE IS REPLACED.
5. MAINTAIN CONCRETE EXPANSION JOINTS AT EXISTING LOCATIONS UNLESS OTHERWISE APPROVED BY CITY ENGINEER.

* EXTENT OF EXCAVATION INCLUDES 18" OVERCUT AS SHOWN ON STANDARD DETAILS 1 & 2, SHEET 70.

(3/71) STREET CUT PAVEMENT REPLACEMENT ASPHALT PAVEMENT OF ALL AGES

NTS

SWTP
Surface Water Transmission Program

Lockwood, Andrews & Newnam, Inc.
A LEO A DALY COMPANY
2925 Briarpark Drive Houston, TX 77042

STATE OF TEXAS
ALISA GRUBER
95685
LICENSED PROFESSIONAL ENGINEER
Lockwood, Andrews & Newnam, Inc. Firm No. 2614

SURVEYED BY:
KUO & ASSOCIATES, INC.
C.O.H. Field Book P-5554

CITY OF HOUSTON
DEPARTMENT OF PUBLIC WORKS AND ENGINEERING

SWTP CONTRACT 74A-1

STREET CUT DETAILS

WBS NO.	S-000900-0109-4
DRAWING SCALE	NOT TO SCALE
CITY OF HOUSTON PM	ARTHUR C. MORRIS, P.E.
SHEET NO.	71 OF 91

PUBLIC WORKS AND ENGINEERING
ACCEPTED AND FILED
48326
CITY SURVEYOR, PUBLIC WORKS
HOUSTON, TEXAS

No. Date Revisions App.

12/28/2010 4:25:58 PM JmusKu

I:\130-10337-004\4-0-production\4-01-drawings\civil\standard details\071-Street Cut Details.dgn

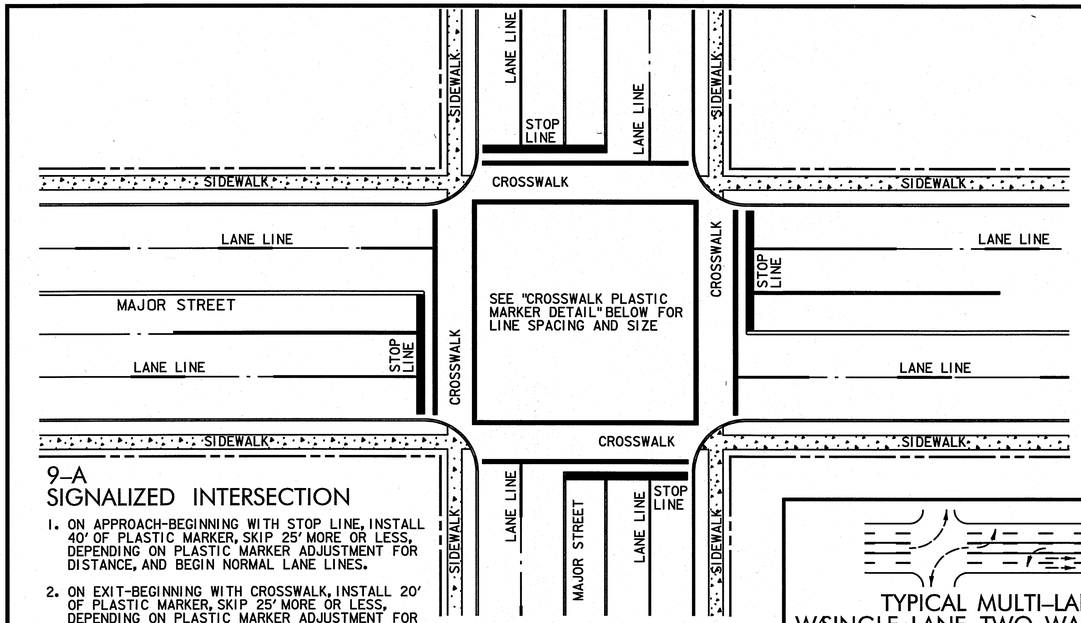

9-A
SIGNALIZED INTERSECTION

1. ON APPROACH-BEGINNING WITH STOP LINE, INSTALL 40' OF PLASTIC MARKER, SKIP 25' MORE OR LESS, DEPENDING ON PLASTIC MARKER ADJUSTMENT FOR DISTANCE, AND BEGIN NORMAL LANE LINES.
2. ON EXIT-BEGINNING WITH CROSSWALK, INSTALL 20' OF PLASTIC MARKER, SKIP 25' MORE OR LESS, DEPENDING ON PLASTIC MARKER ADJUSTMENT FOR DISTANCE, AND BEGIN NORMAL LANE LINES.

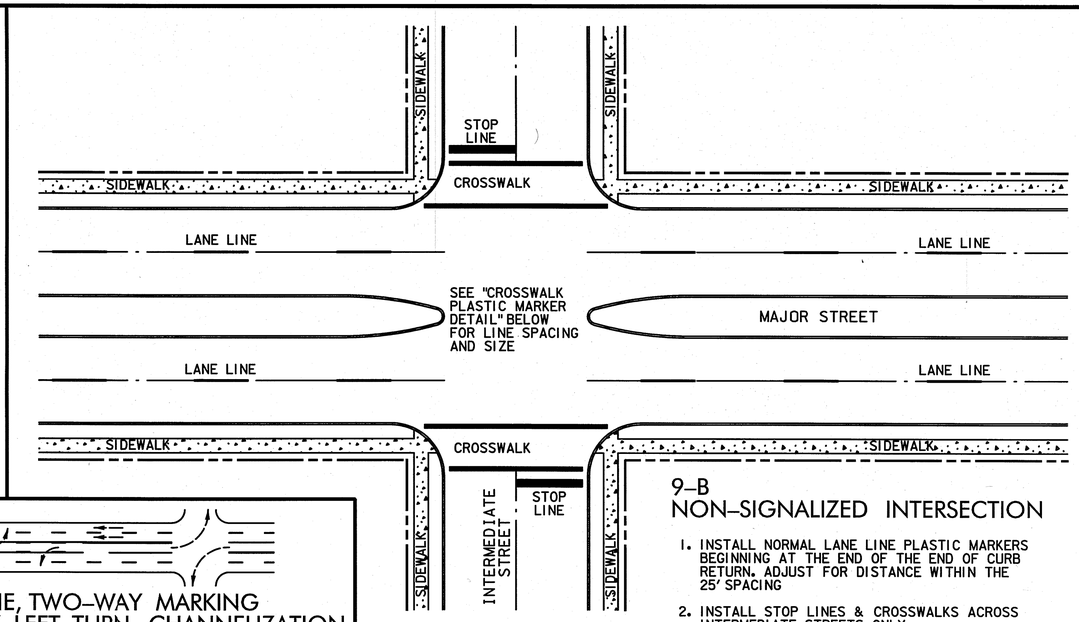

9-B
NON-SIGNALIZED INTERSECTION

1. INSTALL NORMAL LANE LINE PLASTIC MARKERS BEGINNING AT THE END OF THE END OF CURB RETURN. ADJUST FOR DISTANCE WITHIN THE 25' SPACING
2. INSTALL STOP LINES & CROSSWALKS ACROSS INTERMEDIATE STREETS ONLY.

TYPICAL MULTI-LANE, TWO-WAY MARKING W/SINGLE LANE, TWO-WAY LEFT TURN CHANNELIZATION

GENERAL NOTES

1. MINIMUM CROSSWALK WIDTH, 8' C-C.
2. CROSSWALKS SHALL BE 12" WIDTH APPLIED AS INDICATED IN "CROSSWALK PLASTIC MARKER DETAIL". STOP LINES SHALL BE 24" WIDE OR 2-12" WIDE STRIPES.
3. LANE LINES, SINGLE & DOUBLE ℄'S SHALL BE 4" WIDE REFLECTORIZED PLASTIC MARKINGS.
4. ALL PLASTIC MARKERS SHALL BE WHITE UNLESS OTHERWISE NOTED.
5. ROADWAY WIDTHS OF 27' OR LESS SHALL HAVE NO LONGITUDINAL MARKINGS.
6. ALL TRAVERSE MARKINGS SHALL END 18" FROM FACE OF CURB.
7. FOR SKEW INTERSECTIONS AND STREET WIDTHS NOT SHOWN, SEE DEPARTMENT OF TRAFFIC AND TRANSPORTATION.
8. ALL DIMENSIONS SHOWN TO CENTER OF PLASTIC MARKINGS, UNLESS OTHERWISE NOTED.

60' ROADWAY

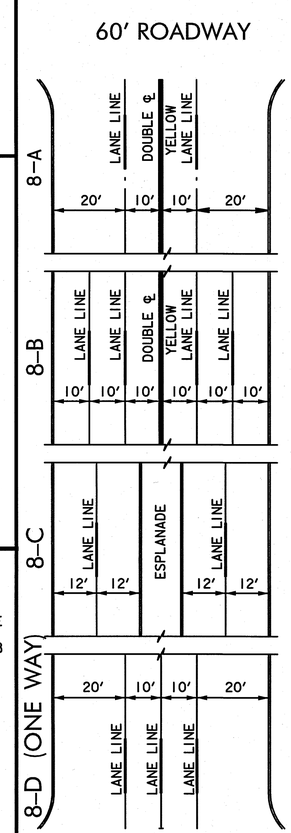

80' (78') ROADWAY

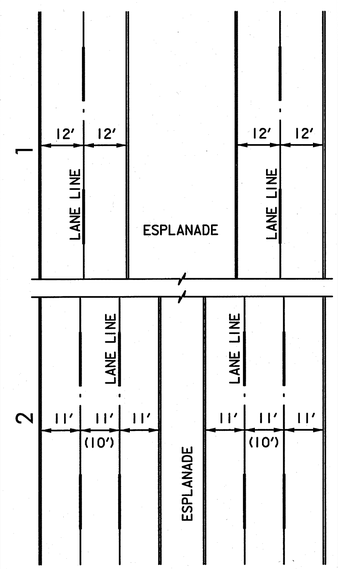

35' ROADWAY

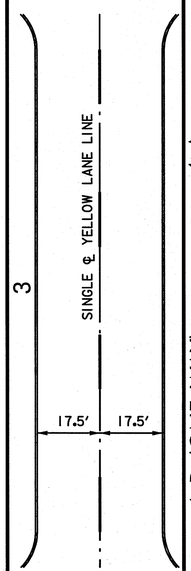

36' ROADWAY

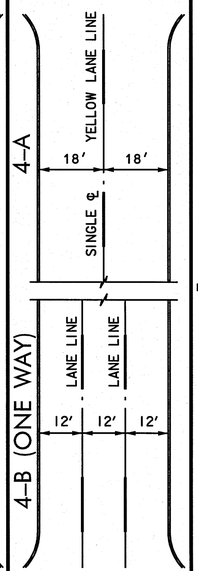

40' ROADWAY

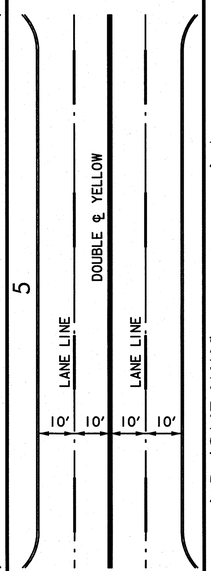

44' ROADWAY

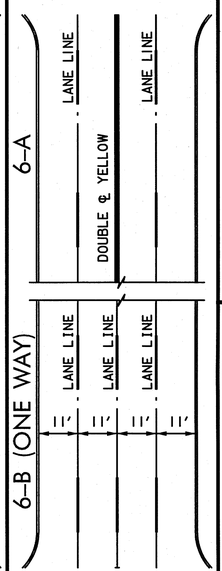

52'-56' ROADWAYS

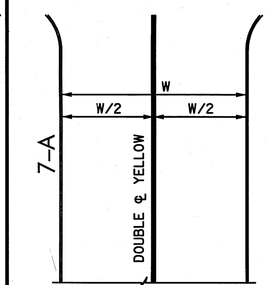

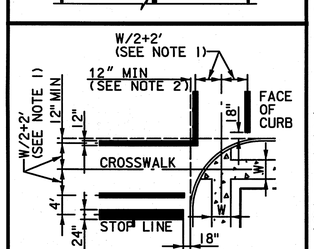

CROSSWALK PLASTIC MARKER DETAIL

RAISED PAVEMENT MARKER AND PLACEMENT DETAIL

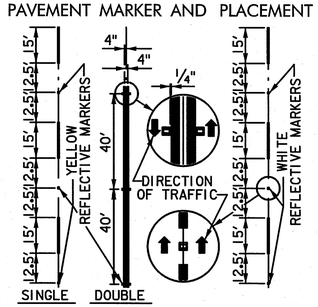

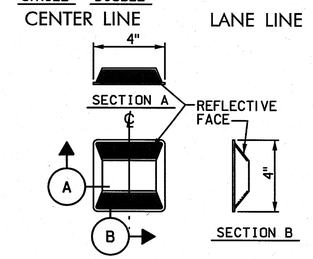

REFLECTIVE MARKER TYPE-1

SWTP
Surface Water Transmission Program

LAN
Lockwood, Andrews & Newnam, Inc.
A LEO A DALY COMPANY
2925 Briarpark Drive Houston, TX 77042

SURVEYED BY:
KUO & ASSOCIATES, INC.
C.O.H. Field Book P-5554

STATE OF TEXAS
ALISA GRUBER
95685
LICENSED PROFESSIONAL ENGINEER
12-2-11
Lockwood, Andrews & Newnam, Inc. Firm No. 2614

CITY OF HOUSTON
DEPARTMENT OF PUBLIC WORKS AND ENGINEERING

SWTP CONTRACT 74A-1

STANDARD PAVEMENT MARKING

WBS NO.	S-000900-0109-4
DRAWING SCALE	NOT TO SCALE
CITY OF HOUSTON PM	ARTHUR C. MORRIS, P.E.
SHEET NO.	72 OF 91

PUBLIC WORKS AND ENGINEERING
ACCEPTED AND FILED
48326
CITY DRAWING NO.
HOUSTON, TEXAS

No. Date Revisions

12/28/2010

4:25:59 PM jmusku

I:\1130-10337-004\4-0-production\v4-01-drawings\civil\standard details\072-std Pavement Markings.dgn

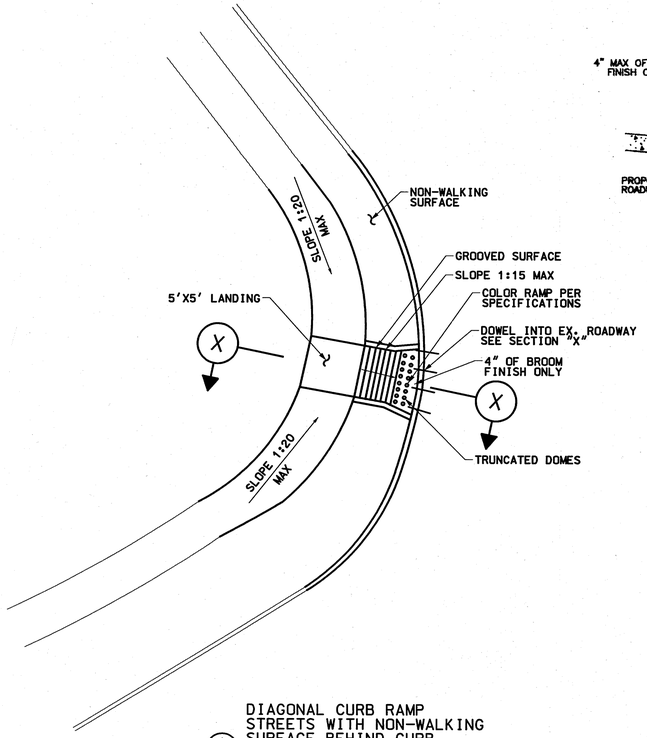

DIAGONAL CURB RAMP
STREETS WITH NON-WALKING
SURFACE BEHIND CURB

1/73

N.T.S.

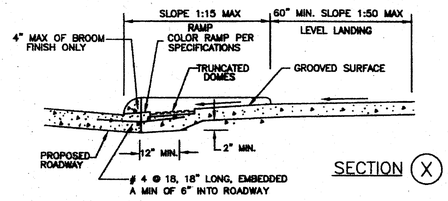

SECTION (X)

NOTES:

1. REPLACE EXISTING SIDEWALK FROM LEVEL LANDING AS NECESSARY TO ACHIEVE 1:20 SLOPE

2. SLOPES GREATER THAN 1:20 BUT LESS THAN 1:15 (MAX) REQUIRE GROOVES AND COLORING

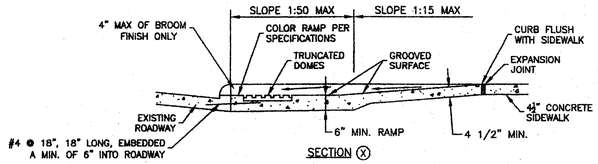

SECTION (X)

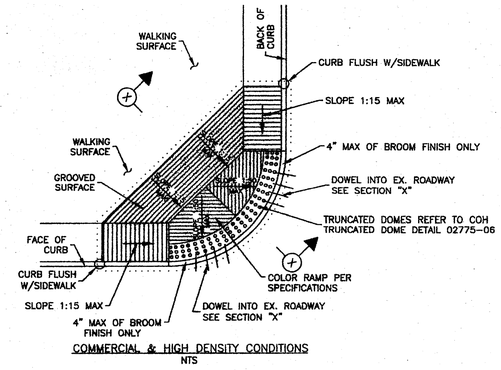

COMMERCIAL & HIGH DENSITY CONDITIONS
NTS

CITY OF HOUSTON
DEPARTMENT OF PUBLIC WORKS AND ENGINEERING

COMMERCIAL CURB RAMP DETAIL

(NOT TO SCALE)

APPROVED BY: CITY ENGINEER	APPROVED BY: DIRECTOR OF PUBLIC WORKS AND ENGINEERING
EFF DATE: APR-18-2011	DWG NO: 02775-05

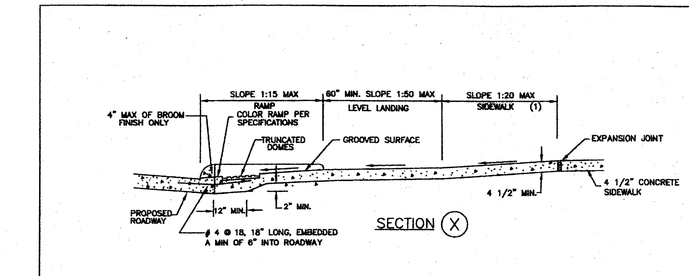

SECTION (X)

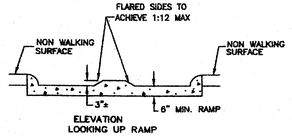

ELEVATION
LOOKING UP RAMP

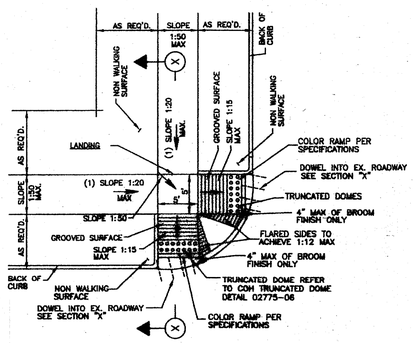

STREETS WITH NON-WALKING
SURFACE BEHIND CURB

N.T.S.

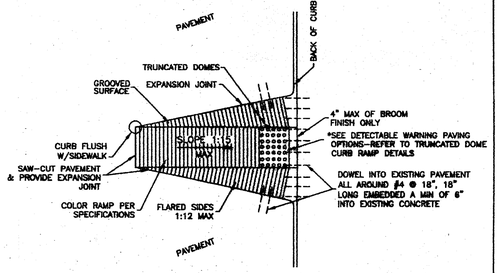

RAMP CONSTRUCTION FOR EXISTING PAVEMENT

NOTES:

1. REPLACE EXISTING SIDEWALK FROM LEVEL LANDING AS NECESSARY TO ACHIEVE 1:20 SLOPE

2. SLOPES GREATER THAN 1:20 BUT LESS THAN 1:15 (MAX) REQUIRE GROOVES AND COLORING

CITY OF HOUSTON
DEPARTMENT OF PUBLIC WORKS AND ENGINEERING

WHEEL CHAIR RAMP DETAILS

(NOT TO SCALE)

APPROVED BY: CITY ENGINEER	APPROVED BY: DIRECTOR OF PUBLIC WORKS AND ENGINEERING
EFF DATE: APR-18-2011	DWG NO: 02775-02

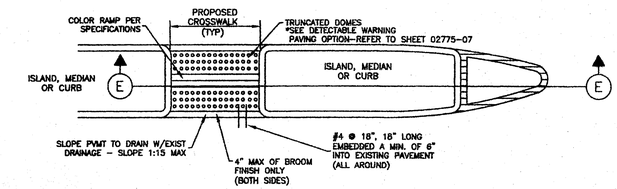

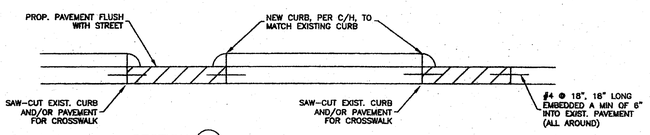

SECTION (E)

SEE COH STANDARD DETAIL FOR
PAVEMENT MARKING DETAILS

FOR ISLAND, MEDIAN, OR CURB MODIFICATIONS FOR CROSSWALKS

CITY OF HOUSTON
DEPARTMENT OF PUBLIC WORKS AND ENGINEERING

CURB MODIFICATIONS FOR WHEEL CHAIR RAMPS & CROSSWALKS

(NOT TO SCALE)

APPROVED BY: CITY ENGINEER	APPROVED BY: DIRECTOR OF PUBLIC WORKS AND ENGINEERING
EFF DATE: APR-18-2011	DWG NO: 02775-04

SWTP
Surface Water Transmission Program

Lockwood, Andrews & Newnam, Inc.
A LEO A DALY COMPANY
2925 Briarpark Drive Houston, TX 77042

SURVEYED BY:
KUO & ASSOCIATES, INC.
C.O.H. Field Book P-5554

STATE OF TEXAS
ALISA GRUBER
95685
LICENSED PROFESSIONAL ENGINEER
Lockwood, Andrews & Newnam, Inc. Firm No. 2614

CITY OF HOUSTON
DEPARTMENT OF PUBLIC WORKS AND ENGINEERING

SWTP CONTRACT 74A-1

SIDEWALK AND WHEELCHAIR RAMP DETAILS 1 OF 2

WBS NO. S-000900-0109-4	ACCEPTED AND FILED 48326
DRAWING SCALE	NOT TO SCALE
CITY OF HOUSTON PM	ARTHUR C. MORRIS, P.E.
SHEET NO. 73 OF 91	

No.	Date	Revisions	Appr.

6/20/2011 9:40:30 AM MMalabanan

L:\130-10537-004\4-0 Product\dgn\4-01-Drawings\Civil\Standard Details\sht73-WC-Ramp Detail 1 of 1.dgn

6/20/2011

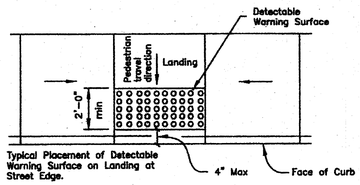

Typical Placement of Detectable Warning Surface on Landing at Street Edge.

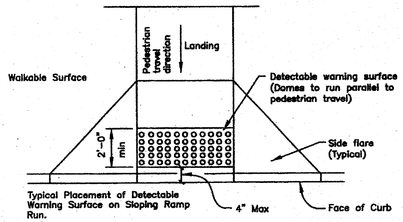

Typical Placement of Detectable Warning Surface on Sloping Ramp Run.

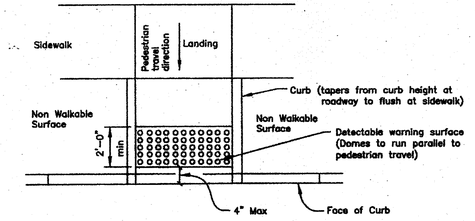

GENERAL NOTES FOR DETECTABLE WARNINGS

1. CURB RAMPS MUST CONTAIN A DETECTABLE WARNING SURFACE THAT CONSISTS OF RAISED TRUNCATED DOMES. THE SURFACE MUST CONTRAST VISUALLY WITH ADJOINING SURFACE, INCLUDING SIDE FLOORS. FURNISH DARK BROWN OR DARK RED DETECTABLE WARNING SURFACE ADJACENT TO UNCOLORED CONCRETE, UNLESS SPECIFIED ELSEWHERE IN THE PLANS.

2. DETECTABLE WARNING SURFACES MUST BE SLIP RESISTANT AND NOT ALLOW WATER TO ACCUMULATE.

3. ALIGN TRUNCATED DOMES IN THE DIRECTION OF PEDESTRIAN TRAVEL WHEN ENTERING THE STREET.

4. OMIT

5. DETECTABLE WARNING SURFACES SHALL BE A MINIMUM OF 24" IN DEPTH IN THE DIRECTION OF PEDESTRIAN TRAVEL, AND EXTEND THE FULL WIDTH OF THE CURB RAMP OR LANDING WHERE THE PEDESTRIAN ACCESS ROUTE ENTERS THE STREET.

6. DETECTABLE WARNING SURFACES SHALL BE LOCATED SO THAT THE EDGE NEAREST THE CURB LINE IS 4" FROM THE EXTENSION OF THE FACE OF CURB. DETECTABLE WARNING SURFACES MAY BE CURVED ALONG THE CORNER RADIUS.

7. REFERENCE CURB RAMP DETAILS FOR RAMP GROOVED SURFACE.

CITY OF HOUSTON DEPARTMENT OF PUBLIC WORKS AND ENGINEERING	
DETECTABLE WARNING CURB RAMP DETAILS (NOT TO SCALE)	
APPROVED BY: CITY ENGINEER	DIRECTOR OF PUBLIC WORKS AND ENGINEERING
EFF DATE: APR-18-2011	DWG NO: 02775-06

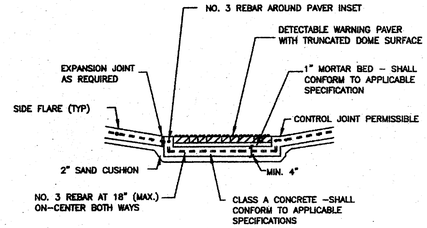

GENERAL NOTES (PAVERS)

1. FURNISH DETECTABLE WARNING PAVER UNITS MEETING ALL REQUIREMENTS OF ASTM C-936, C-33. LAY IN A TWO BY TWO UNIT BASKET WEAVE PATTERN OR AS DIRECTED.

2. LAY FULL-SIZE UNITS FIRST FOLLOWED BY CLOSURE UNITS CONSISTING OF AT LEAST 25 PERCENT OF A FULL UNIT. CUT DETECTABLE WARNING PAVER UNITS USING A POWER SAW.

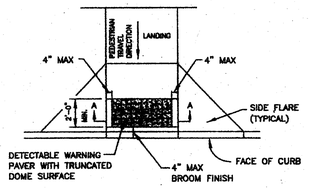

DETECTABLE WARNING PAVER (OPTION)

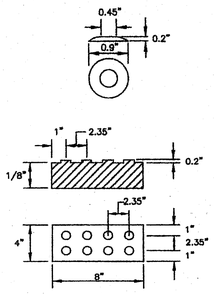

DETECTABLE WARNING PAVER

CITY OF HOUSTON DEPARTMENT OF PUBLIC WORKS AND ENGINEERING	
DETECTABLE WARNING PAVER (OPTION) (NOT TO SCALE)	
APPROVED BY: CITY ENGINEER	DIRECTOR OF PUBLIC WORKS AND ENGINEERING
EFF DATE: APR-18-2011	DWG NO: 02775-07

SWTP
Surface Water Transmission Program

Lockwood, Andrews & Newnam, Inc.
A LEO A DALY COMPANY
2925 Briarpark Drive Houston, TX 77042

STATE OF TEXAS
ALISA GRUBER
95685
LICENSED PROFESSIONAL ENGINEER
Lockwood, Andrews & Newnam, Inc. Firm No. 2614

SURVEYED BY:
KUO & ASSOCIATES, INC.
C.O.H. Field Book P-5554

CITY OF HOUSTON
DEPARTMENT OF PUBLIC WORKS AND ENGINEERING

SWTP CONTRACT 74A-1

SIDEWALK AND WHEELCHAIR RAMP DETAILS 2 OF 2

WBS NO. S-000900-0109-4	PUBLIC WORKS AND ENGINEERING ACCEPTED AND CERTIFIED 48326
DRAWING SCALE NOT TO SCALE	
CITY OF HOUSTON PM ARTHUR C. MORRIS, P.E.	
SHEET NO. 74 OF 91	

No.	Date	Revisions	App.

9:40:58 AM
Mena Isandian
6/20/2011
L:\1130-10331-004\4-0-Production\4-01-Drawings\Civil\Standard Details\074-WC-Ramp Details02.dgn

TABLE 1

REINFORCING STEEL INFORMATION
FOR 4 1/2 " THICK SIDEWALKS
EXPANSION JOINT SPACING = 36 FT
fc' = 3,000 PSI AND fy = 60,000 PSI

SIDEWALK THICKNESS (IN)	SIDEWALK WIDTH (FT)	LONGITUDINAL STEEL #3 BARS			TRANSVERSE STEEL #3 BARS SPACING (IN)
		NUMBER OF BARS	SPACING (IN)	END BAR SPACING (IN)	
4.5	4.0	3	21.0	3.0	48.0
4.5	5.0	3	27.0	3.0	48.0
4.5	6.0	4	22.0	3.0	48.0

NOTES:

1. REINFORCED CONCRETE SIDEWALKS THRU DRIVEWAY OPENINGS SHALL BE EITHER 6" THICK OR 7" THICK AS SPECIFIED, ON 6" STABILIZED SUBGRADE. FOR THE REINFORCING STEEL REQUIREMENTS, SEE TABLE 1 CITY OF HOUSTON DRAWING "RIENFORCED CONCRETE DRIVEWAY DETAILS ON CURB TYPE STREETS".
2. CONTRACTOR SHALL CONSTRUCT SIDEWALK IN A MANNER NOT TO BLOCK THE NATURAL DRAINAGE FROM ADJACENT PROPERTY.

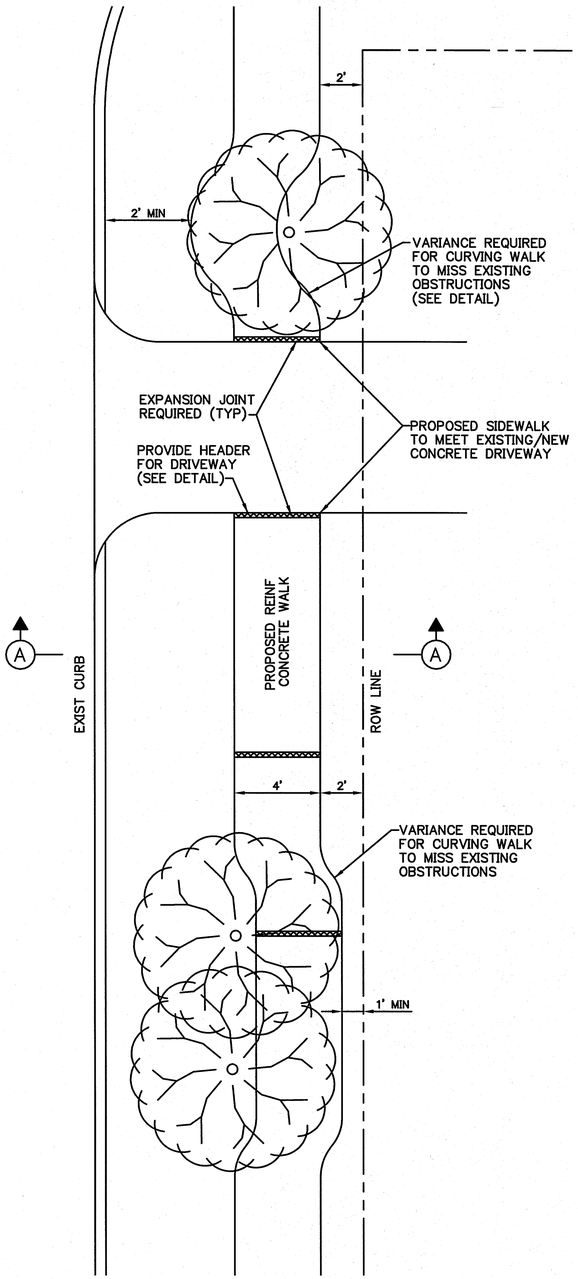

PLAN VIEW

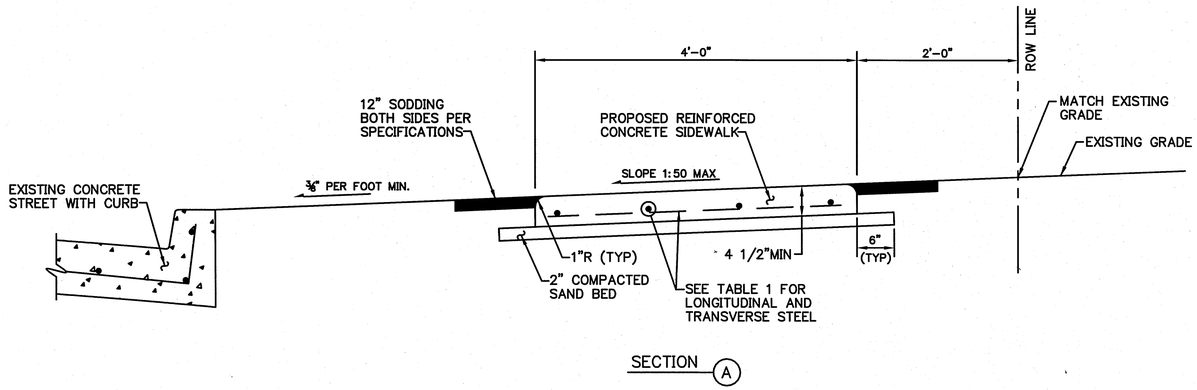

SECTION A

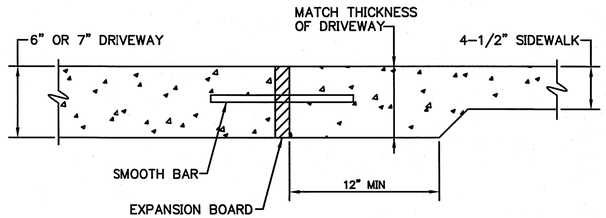

DRIVEWAY/SIDEWALK HEADER DETAIL

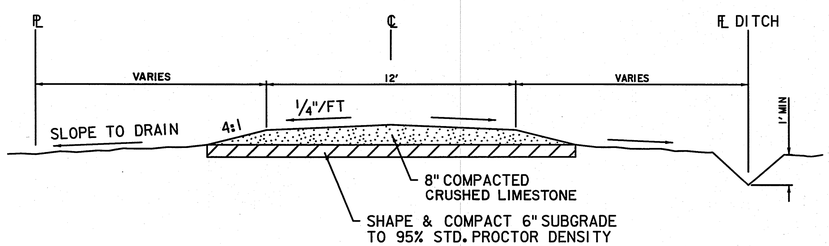

1/75 CONCRETE SIDEWALK DETAILS FOR STREETS WITH CURBS
NOT TO SCALE

2/75 12' CRUSHED LIMESTONE ACCESS ROAD
NOT TO SCALE

SWTP
Surface Water Transmission Program

Lockwood, Andrews & Newnam, Inc.
A LEO A DALY COMPANY
2925 Briarpark Drive Houston, TX 77042

SURVEYED BY:
KUO & ASSOCIATES, INC.
C.O.H. Field Book P-5554

STATE OF TEXAS
ALISA GRUBER
95685
LICENSED PROFESSIONAL ENGINEER
1-5-11
Lockwood, Andrews & Newnam, Inc. Firm No. 2614

CITY OF HOUSTON
DEPARTMENT OF PUBLIC WORKS AND ENGINEERING

SWTP CONTRACT 74A-1

CONCRETE SIDEWALK DETAILS FOR STREETS WITH CURBS AND 12' CRUSHED LIMESTONE ACCESS ROAD DETAIL

WBS NO.	S-000900-0109-4
DRAWING SCALE	NOT TO SCALE
CITY OF HOUSTON PM	ARTHUR C. MORRIS, P.E.
SHEET NO.	75 OF 91

ACCEPTED AND FILED
48326
CITY OF HOUSTON
DEPARTMENT OF PUBLIC WORKS AND ENGINEERING
HOUSTON, TEXAS

Asp. | Revisions | No. | Date
12/29/2010 4:26:07 PM Jmusku
I:\130-10337-004\4-0-production\4-01-drawings\civil\standard details\075-Concrete Sidewalk Details with curbs.dgn

GENERAL NOTES FOR TRAFFIC CONTROL

1. THE CONSTRUCTION TRAFFIC CONTROL SIGNS, DEVICES AND BARRICADES ON THESE DRAWINGS CONSTITUTE MINIMUM REQUIREMENTS AND ARE NOT INTENDED TO COVER SPECIAL CIRCUMSTANCES OR OTHER CONDITIONS THAT MAY ARISE DUE TO UNFORESEEN FIELD CONDITIONS. THE CONTRACTOR SHALL PLACE AND MAINTAIN SUFFICIENT ADDITIONAL SIGNS, BARRICADES, AND WARNING DEVICES TO WARN THE PUBLIC AND PROVIDE FOR THE SAFE MOVEMENT OF TRAFFIC AND THE CONSTRUCTION ZONE SAFETY. WHERE PROJECT REQUIREMENTS ARE NOT FULLY SATISFIED BY THE STANDARDS SHOWN HEREON "THE TEXAS MANUAL ON UNIFORM TRAFFIC CONTROL DEVICES" SHALL GOVERN.

2. CONTRACTOR SHALL PROVIDE AND INSTALL ALL TRAFFIC CONTROL DEVICES IN CONFORMANCE WITH PART VI OF THE TEXAS MANUAL ON UNIFORM TRAFFIC CONTROL DEVICES (T.M.U.T.C.D.), MOST RECENT EDITION WITH REVISIONS, DURING CONSTRUCTION.

3. BARRICADES, SIGNS, CHANNELIZING DEVICES, AND TRAFFIC HANDLING DEVICES AS SHOWN SHALL BE ADJUSTED TO FIT FIELD CONDITIONS OR AS DIRECTED BY THE ENGINEER.

4. CONTRACTOR SHALL PROVIDE ACCESS TO ALL BUSINESSES AND RESIDENCES ALONG THIS PROJECT AT ALL TIMES DURING CONSTRUCTION UNLESS OTHERWISE AUTHORIZED SPECIFICALLY BY THE ENGINEER.

5. ALL EXISTING STOP SIGNS, STREET NAME SIGNS, AND WARNING SIGNS SHALL BE MAINTAINED IN PLACE DURING THE ENTIRE PERIOD OF CONSTRUCTION BY THE CONTRACTOR.

6. NO WORK WILL BE PERFORMED IN THE TRAVELED WAY INCLUDING LOADING AND UNLOADING OF TRUCKS.

7. THE ENGINEER MAY DIRECT THE CONTRACTOR TO FURNISH ADDITIONAL SIGNS, BARRICADES, AND CHANNELIZING DEVICES AS REQUIRED TO MAINTAIN TRAFFIC AND CONSTRUCTION ZONE SAFETY DURING CONSTRUCTION. ANY SUCH ADDITIONAL SIGNS, BARRICADES, ETC. SHALL BE CONSIDERED A PART OF THE LUMP SUM PAY ITEM.

8. WHEN DIRECTED BY THE ENGINEER, THE CONTRACTOR SHALL PROVIDE FLAGGERS TO DIRECT TRAFFIC. FLAGGERS SHALL BE OFF-DUTY UNIFORMED POLICE OFFICERS AND SHALL BE PAID FOR BY THE CONTRACTOR. THIS DOES NOT RELIEVE THE CONTRACTOR OF RESPONSIBILITY OR TAKING OTHER STEPS AND PROVIDING OTHER PERSONNEL WHICH THE CONTRACTOR MAY DEEM NECESSARY FOR PROTECTION OF WORK AND THE PUBLIC.

9. CONTRACTOR SHALL INSURE THAT ALL BARRICADES, SIGNS, CHANNELIZING DEVICES, WARNING LIGHTS, AND TRAFFIC HANDLING DEVICES ARE MAINTAINED IN A CLEAN FUNCTIONAL CONDITION AT ALL TIMES.

10. ALL SIGNS, WARNING DEVICES, AND BARRICADES ARE THE SOLE RESPONSIBILITY OF THE CONTRACTOR, INCLUDING ACTS OF VANDALISM.

11. THE CONTRACTOR SHALL SEQUENCE THE CONSTRUCTION IN SUCH A MANNER THAT NO ADJACENT CROSS STREETS AND MEDIAN OPENINGS ARE CLOSED AT THE SAME TIME.

12. THE CONTRACTOR SHALL MAINTAIN BARRICADES AND SAFETY FENCES AT EACH SITE WHERE PEDESTRIAN TRAFFIC IS EVIDENT.

13. THE CONTRACTOR SHALL CALL THE CITY OF HOUSTON TRAFFIC SIGNAL SHOP WHEN WORK IS SCHEDULED NEAR SIGNAL CONDUIT AT (713) 803-3000. CALL AT LEAST FIVE (5) WORKING DAYS IN ADVANCE.

14. THE TRAFFIC SIGNAL SHALL REMAIN IN OPERATION DURING THE ENTIRE PERIOD OF CONSTRUCTION. IT IS THE CONTRACTOR'S RESPONSIBILITY TO MAINTAIN THE SIGNAL IN PROPER AND SAFE OPERATION. THE CONTRACTOR WILL BE RESPONSIBLE FOR ADJUSTING, RELOCATING, AND/OR PROVIDING TEMPORARY SIGNALS AND POLES, IF REQUIRED, TO FACILITATE THE VARIOUS TRAFFIC HANDLING SEQUENCES. IMMEDIATELY CALL THE CITY OF HOUSTON, SIGNAL SHOP DISPATCHER AT (713) 803-3000.

15. CONTRACTOR SHALL REALIGN AND READJUST SIGNAL HEADS AS REQUIRED AND DIRECTED BY THE CITY OF HOUSTON AND THE FIELD ENGINEER DURING ENTIRE CONSTRUCTION ACTIVITY. IMMEDIATELY CALL THE CITY OF HOUSTON, SIGNAL SHOP DISPATCHER AT (713) 803-3000.

16. ALL TEMPORARY SIGNAL WORK AND REPAIR SHALL BE COMPLETED IN CONFORMANCE WITH TRAFFIC AND TRANSPORTATION BOOKLET 202 SPECIFICATIONS AND C-3900 SERIES STANDARD DRAWINGS AND IMMEDIATELY CALL THE CITY OF HOUSTON'S SIGNAL DISPATCHER AT (713) 803-3000.

17. THE CONSTRUCTION SIGNS, WARNING DEVICES, AND BARRICADES SHALL REMAIN IN PLACE UNTIL THEIR REMOVAL IS DIRECTED BY THESE PLANS OF BY THE ENGINEER.

18. AT THE CONCLUSION OF CONSTRUCTION, THE CONTRACTOR SHALL RESTORE ALL PAVEMENT MARKINGS TO THEIR ORIGINAL CONDITION TRAFFIC PAINT STRIPES, RAISED PAVEMENT MARKER BUTTONS AND RE-INSTALL THE SIGNS AT THEIR EXISTING CONDITION.

19. CONSTRUCTION IN ANY AREA, THAT IS ADVERSELY AFFECTING TRAFFIC FLOW AND SAFETY, MUST BE PURSUED DILIGENTLY BY THE CONTRACTOR. IF, IN THE OPINION OF THE ENGINEER, THE CONTRACTOR IS NOT DIRECTLY PURSUING THE CONSTRUCTION IN THOSE AREAS, THE ENGINEER MAY REQUIRE THE CONTRACTOR TO CHANGE HIS/HER WORK SCHEDULE TO EXPEDITE COMPLETION IN THOSE AREAS OF CONCERN.

20a. NO LANES SHALL BE CLOSED DURING THE HOURS OF 7:00 AM TO 9:00 AM AND 4:00 PM TO 6:00 PM MONDAY THRU FRIDAY.

20b. NO LANES SHALL BE CLOSED IN RESIDENTIAL AREAS FROM 7:00 PM TO 7:00 AM.

21. CONTRACTOR SHALL MAINTAIN AT LEAST ONE LANE OF TRAFFIC IN EACH DIRECTION DURING WORKING HOURS.

22. CONTRACTOR SHALL COVER OPEN EXCAVATIONS WITH STEEL PLATES ANCHORED PROPERLY DURING NON-WORKING HOURS AND OPEN LANES FOR NORMAL TRAFFIC FLOW.

23. OFF DUTY UNIFORMED POLICE OFFICER(S) FLAGGER(S) IS/ARE REQUIRED TO DIRECT TRAFFIC WHEN LANES ARE BLOCKED.

24. IF THE CONTRACTOR CHOOSES TO USE A DIFFERENT METHOD OF "TRAFFIC CONTROL PLANS" DURING THE CONSTRUCTION THAN WHAT IS OUTLINED IN THE CONTRACT DRAWINGS, (S)HE SHALL BE RESPONSIBLE TO PREPARE AND SUBMIT AN ALTERNATIVE SET OF PLANS* TO TRAFFIC MANAGEMENT AND MAINTENANCE DIVISION, PUBLIC WORKS AND ENGINEERING DEPARTMENT, FOR REVIEW AND APPROVAL TEN WORKING DAYS PRIOR TO IMPLEMENTATION. *THESE PLANS SHALL BE DRAWN TO ACCEPTABLE SCALE ON REPRODUCIBLE MYLARS AND SEALED BY A REGISTERED PROFESSIONAL ENGINEER IN THE STATE OF TEXAS. PLANS SHALL BECOME A PART OF THE CONTRACT DRAWINGS.

25. APPROVED COPIES OF "TRAFFIC CONTROL PLANS" AND LANE/SIDEWALK CLOSURE PERMITS SHALL BE AVAILABLE FOR INSPECTION AT JOB SITE AT ALL TIMES. CONTRACTOR MUST SECURE "LANE/SIDEWALK CLOSURE PERMITS" FROM CITY'S TRAFFIC MANAGEMENT AND MAINTENANCE BRANCH BEFORE CLOSING A LANE/SIDEWALK. THE REQUEST MUST BE MADE AT LEAST TEN BUSINESS DAYS PRIOR TO THE DATE FOR WHICH THE CLOSURE IS SOUGHT. NOTE THAT WORKING HOURS MAY BE RESTRICTED OR THE REQUEST MAY BE DENIED. CALL (713) 837-7280 FOR AN APPLICATION.

CITY OF HOUSTON
TRAFFIC ENGINEERING DESIGN REVIEW SECTION
SPACING FOR CHANNELIZING DEVICES

A. PLASTIC DRUMS ON MERGING TAPER AT 35' C-C WITH CHEVRON SIGN AT 70' C-C AND TYPE "C" WARNING LIGHT (FOR OVERNIGHT CLOSURE)

B. PLASTIC DRUMS ON DOWNSTREAM TAPER AT 35' C-C

C. PLASTIC DRUMS ON RADII AT 5' C-C

D. PLASTIC DRUMS ON TANGENT AT 35' C-C WITH VERTICAL PANEL AT 70' C-C AND TYPE "C" WARNING LIGHT AT 70' C-C (FOR OVERNIGHT CLOSURE)

E. PLASTIC DRUMS IN FRONT OF CONSTRUCTION ZONE AT 20' C-C WITH VERTICAL PANEL AT 40' C-C AND TYPE " A " WARNING LIGHT AT 40' C-C (FOR OVERNIGHT CLOSURE)

F. CONCRETE TRAFFIC BARRIER (CTB) OR LOW PROFILE CONCRETE TRAFFIC BARRIER (LPCTB) WITH RELECTORS @ 10' C-C IF PAVEMENT DROP IS MORE THAN TWELVE INCHES (12") OR

G. PLASTIC DRUMS WITH CHEVRON SIGN GUARD RAIL MOUNTED

NOTE:
SPACINGS SHOWN ON TRAFFIC CONTROL PLANS SHALL SUPERCEDE THE ABOVE SPACINGS. SPACINGS MAY BE ADJUSTED TO PROVIDE DRIVEWAYS, INTERSECTIONS AND/OR MEDIAN OPENINGS.

No.	Date	Revisions	App'd

SWTP
Surface Water Transmission Program

Lockwood, Andrews & Newnam, Inc.
A LEO A DALY COMPANY
2925 Briarpark Drive Houston, TX 77042

Nathelyne A. Kennedy & Associates
Civil & Structural Consulting Engineers
6200 SAVOY DR
SUITE 1250
HOUSTON, TEXAS 77036
(713) 988-0145

Nathelyne A. Kennedy & Associates
REGISTRATION # F-357

STATE OF TEXAS
A. SETAREHASEMAN
68184
LICENSED PROFESSIONAL ENGINEER
12/11/2010

SURVEYED BY:
KUO & ASSOCIATES, INC.
C.O.H. Field Book P-

CITY OF HOUSTON
DEPARTMENT OF PUBLIC WORKS AND ENGINEERING

SWTP CONTRACT 74A-1

TRAFFIC CONTROL PLAN
GENERAL NOTES

SHEET 1 OF 1

WBS NO.	S-000900-0109-4
DRAWING SCALE	NONE
CITY OF HOUSTON PM	ARTHUR C. MORRIS, P.E.
SHEET NO.	76 OF 91

PUBLIC WORKS AND ENGINEERING
ACCEPTED AND FILED
48326
J.I.T. DRAWING NUMBER
HOUSTON, TEXAS

12/17/2010
8:50:21 AM
Jopel
I:\Projects\CUN*\085\1366\CADD\1366TCP-NOTES.dgn

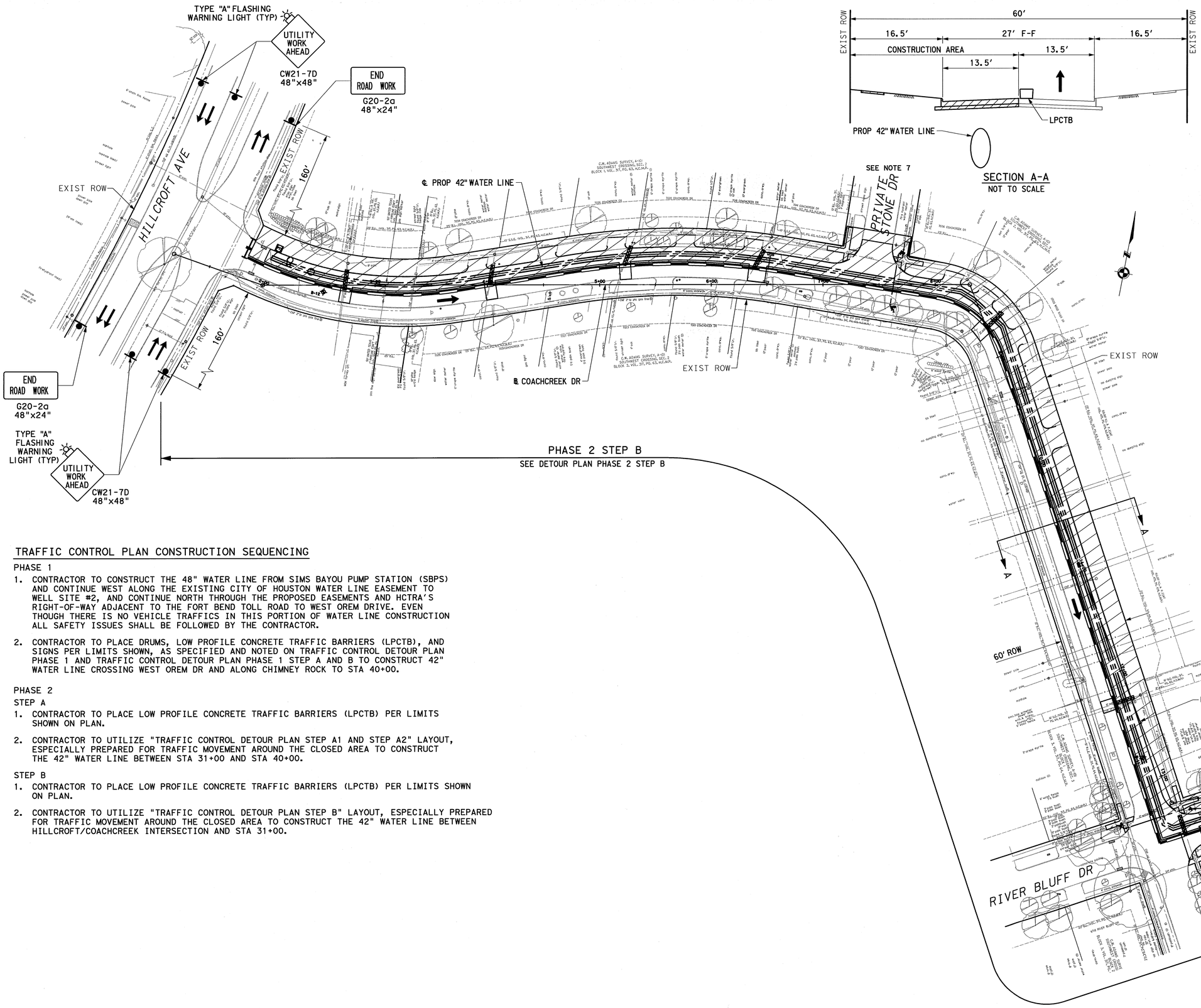

SECTION A-A
NOT TO SCALE

NOTES & LEGEND

1. SEE "TRAFFIC CONTROL GENERAL NOTES" AND "TRAFFIC CONTROL PLAN OVERALL LAYOUT AND CONSTRUCTION SEQUENCING" SHEETS FOR MORE INFORMATION.
2. CONSTRUCTION SHALL BE DURING OFF-PEAK HOURS 9:00 AM TO 4:00 PM WEEKDAYS. IF CONTRACTOR CHOOSES TO ALSO WORK ON WEEKENDS, HE OR SHE SHALL COORDINATE WITH THE CITY ENGINEER TO ENSURE THAT THE CITY ORDINANCES ON NOISE LEVEL AND HOURS OF OPERATION WITHIN RESIDENTIAL AREA ARE FOLLOWED PROPERLY.
3. ROAD MUST BE KEPT OPEN TO TRAFFIC AND CONTRACTOR MUST PROVIDE ADEQUATE OFF-DUTY UNIFORMED OFFICER, SIGN, ETC. TO PROVIDE COMPLETE SAFETY TO THE PUBLIC.
4. CONTRACTOR SHALL PROVIDE ACCESS TO ALL DRIVEWAYS ALONG THIS PROJECT AT ALL TIMES DURING CONSTRUCTION.
5. NO MORE TRENCHES OPENED AT ONE TIME THAN CAN BE BACKFILLED AND COMPACTED IN 8" LIFT, OR COVERED WITH STEEL PLATE ANCHORED PROPERLY AT THE END OF EACH WORKDAY. (NO TRENCH OR AUGER PIT LEFT OPEN OVERNIGHT.)
6. CONTRACTOR SHALL NOTIFY POLICE DEPARTMENT, FIRE DEPARTMENT, THE UNITED STATES POSTAL SERVICE, HOUSTON INDEPENDENT SCHOOL DISTRICT (HISD), AND NEIGHBORHOOD HOME OWNER ASSOCIATIONS PRIOR TO START OF CONSTRUCTION/ROAD CLOSURE.
7. CONTRACTOR SHALL CONSTRUCT WATER LINE IN SEGMENTS, ALLOWING ACCESS TO DRIVEWAYS DURING CONSTRUCTION.

CONSTRUCTION AREA

DIRECTION OF TRAFFIC

LOW PROFILE CONCRETE TRAFFIC BARRIER

TEMPORARY SIGN

TYPE III BARRICADE

ONE WAY
R6-2R 24"x30"

ONE WAY
R6-2L 24"x30"

DURING CONSTRUCTION CONTRACTOR SHALL PLACE SIGNS R6-2R & R6-2L AT DRIVEWAYS ALONG THE LENGTH OF THE PROJECT.

TRAFFIC CONTROL PLAN CONSTRUCTION SEQUENCING

PHASE 1

1. CONTRACTOR TO CONSTRUCT THE 48" WATER LINE FROM SIMS BAYOU PUMP STATION (SBPS) AND CONTINUE WEST ALONG THE EXISTING CITY OF HOUSTON WATER LINE EASEMENT TO WELL SITE #2, AND CONTINUE NORTH THROUGH THE PROPOSED EASEMENTS AND HCTRA'S RIGHT-OF-WAY ADJACENT TO THE FORT BEND TOLL ROAD TO WEST OREM DRIVE. EVEN THOUGH THERE IS NO VEHICLE TRAFFICS IN THIS PORTION OF WATER LINE CONSTRUCTION ALL SAFETY ISSUES SHALL BE FOLLOWED BY THE CONTRACTOR.
2. CONTRACTOR TO PLACE DRUMS, LOW PROFILE CONCRETE TRAFFIC BARRIERS (LPCTB), AND SIGNS PER LIMITS SHOWN, AS SPECIFIED AND NOTED ON TRAFFIC CONTROL DETOUR PLAN PHASE 1 AND TRAFFIC CONTROL DETOUR PLAN PHASE 1 STEP A AND B TO CONSTRUCT 42" WATER LINE CROSSING WEST OREM DR AND ALONG CHIMNEY ROCK TO STA 40+00.

PHASE 2

STEP A

1. CONTRACTOR TO PLACE LOW PROFILE CONCRETE TRAFFIC BARRIERS (LPCTB) PER LIMITS SHOWN ON PLAN.
2. CONTRACTOR TO UTILIZE "TRAFFIC CONTROL DETOUR PLAN STEP A1 AND STEP A2" LAYOUT, ESPECIALLY PREPARED FOR TRAFFIC MOVEMENT AROUND THE CLOSED AREA TO CONSTRUCT THE 42" WATER LINE BETWEEN STA 31+00 AND STA 40+00.

STEP B

1. CONTRACTOR TO PLACE LOW PROFILE CONCRETE TRAFFIC BARRIERS (LPCTB) PER LIMITS SHOWN ON PLAN.
2. CONTRACTOR TO UTILIZE "TRAFFIC CONTROL DETOUR PLAN STEP B" LAYOUT, ESPECIALLY PREPARED FOR TRAFFIC MOVEMENT AROUND THE CLOSED AREA TO CONSTRUCT THE 42" WATER LINE BETWEEN HILLCROFT/COACHCREEK INTERSECTION AND STA 31+00.

SWTP
Surface Water Transmission Program

Lockwood, Andrews & Newnam, Inc.
A LEO A DALY COMPANY
2925 Briarpark Drive Houston, TX 77042

Nathelyne A. Kennedy & Associates
Civil & Structural Consulting Engineers
6200 SAVOY DR
SUITE 1250
HOUSTON, TEXAS 77036
(713) 988-0145

SURVEYED BY:
KUO & ASSOCIATES, INC.
C.O.H. Field Book P-

Nathelyne A. Kennedy & Associates
REGISTRATION # F-357

STATE OF TEXAS
A. SETAREHASEMAN
68184
LICENSED PROFESSIONAL ENGINEER
12/17/2010

CITY OF HOUSTON
DEPARTMENT OF PUBLIC WORKS AND ENGINEERING

SWTP CONTRACT 74A-1

TRAFFIC CONTROL PLAN OVERALL LAYOUT AND CONSTRUCTION SEQUENCING

SHEET 1 OF 3

WBS NO.	S-000900-0109-4
DRAWING SCALE	
V: N/A	H: 1"=40'
CITY OF HOUSTON PM	ARTHUR C. MORRIS, P.E.
SHEET NO.	77 OF 91

ACCEPTED AND FILED
PUBLIC WORKS AND ENGINEERING
48326
CITY DRAWING NUMBER
HOUSTON, TEXAS

No.	Date	Revisions	App.

12/17/2010 8:52:00 AM jose.l

I:\Projects\CAD\J085\1366\CADD\1366*TCP01.dgn

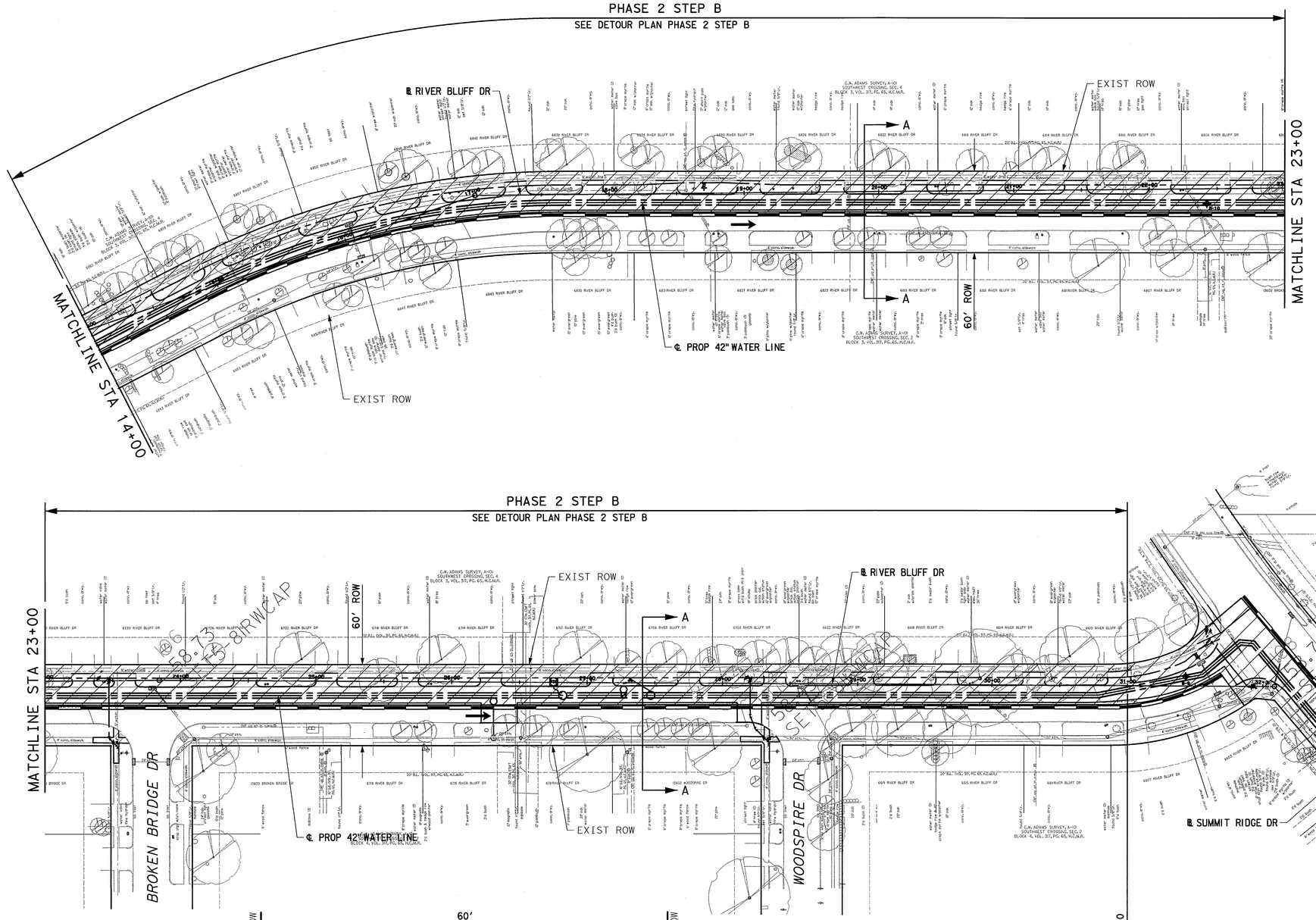

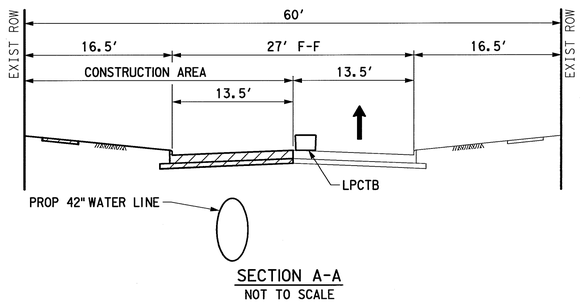

SECTION A-A
NOT TO SCALE

NOTES & LEGEND

1. SEE "TRAFFIC CONTROL GENERAL NOTES" AND "TRAFFIC CONTROL PLAN OVERALL LAYOUT AND CONSTRUCTION SEQUENCING" SHEETS FOR MORE INFORMATION.
2. CONSTRUCTION SHALL BE DURING OFF-PEAK HOURS 9:00 AM TO 4:00 PM WEEKDAYS. IF CONTRACTOR CHOOSES TO ALSO WORK ON WEEKENDS, HE OR SHE SHALL COORDINATE WITH THE CITY ENGINEER TO ENSURE THAT THE CITY ORDINANCES ON NOISE LEVEL AND HOURS OF OPERATION WITHIN RESIDENTIAL AREA ARE FOLLOWED PROPERLY.
3. ROAD MUST BE KEPT OPEN TO TRAFFIC AND CONTRACTOR MUST PROVIDE ADEQUATE OFF-DUTY UNIFORMED OFFICER, SIGN, ETC. TO PROVIDE COMPLETE SAFETY TO THE PUBLIC.
4. CONTRACTOR SHALL PROVIDE ACCESS TO ALL DRIVEWAYS ALONG THIS PROJECT AT ALL TIMES DURING CONSTRUCTION.
5. NO MORE TRENCHES OPENED AT ONE TIME THAN CAN BE BACKFILLED AND COMPACTED IN 8" LIFT, OR COVERED WITH STEEL PLATE ANCHORED PROPERLY AT THE END OF EACH WORKDAY. (NO TRENCH OR AUGER PIT LEFT OPEN OVERNIGHT.)
6. CONTRACTOR SHALL NOTIFY POLICE DEPARTMENT, FIRE DEPARTMENT, THE UNITED STATES POSTAL SERVICE, HOUSTON INDEPENDENT SCHOOL DISTRICT (HISD), AND NEIGHBORHOOD HOME OWNER ASSOCIATIONS PRIOR TO START OF CONSTRUCTION/ROAD CLOSURE.
7. SEE "TRAFFIC CONTROL PLAN OVERALL LAYOUT AND CONSTRUCTION SEQUENCING" SHEET 1 OF 3 FOR CONSTRUCTION SEQUENCING NOTES.

CONSTRUCTION AREA

DIRECTION OF TRAFFIC

LOW PROFILE CONCRETE TRAFFIC BARRIER

TEMPORARY SIGN

TYPE III BARRICADE

ONE WAY
R6-2R
24"x30"

ONE WAY
R6-2L
24"x30"

DURING CONSTRUCTION CONTRACTOR SHALL PLACE SIGNS R6-2R & R6-2L AT DRIVEWAYS ALONG THE LENGTH OF THE PROJECT.

No.	Date	Revisions	App'd

SWTP
Surface Water Transmission Program

LAN
Lockwood, Andrews & Newnam, Inc.
A LEO A DALY COMPANY
2925 Briarpark Drive Houston, TX 77042

Nathelyne A. Kennedy & Associates
Civil & Structural Consulting Engineers
6200 SAVOY DR
SUITE 1250
HOUSTON, TEXAS 77036
(713) 988-0145

SURVEYED BY:
KUO & ASSOCIATES, INC.
C.O.H. Field Book P-

Nathelyne A. Kennedy & Associates
REGISTRATION # F-357

STATE OF TEXAS
A. SETAREHASEMAN
68184
LICENSED PROFESSIONAL ENGINEER
12/17/2010

CITY OF HOUSTON
DEPARTMENT OF PUBLIC WORKS AND ENGINEERING

SWTP CONTRACT 74A-1

TRAFFIC CONTROL PLAN
OVERALL LAYOUT AND
CONSTRUCTION SEQUENCING

SHEET 2 OF 3

WBS NO.	S-000900-0109-4
DRAWING SCALE	
V: N/A H: 1"=40'	
CITY OF HOUSTON PM	
ARTHUR C. MORRIS, P.E.	
SHEET NO. 78 OF 91	

PUBLIC WORKS AND ENGINEERING
ACCEPTED AND FILED
48326
DRAWING NUMBER
HOUSTON, TEXAS

12/17/2010 8:52:21 AM jdeel
I:\Projects\CUR+JOBS\1366\CADD\1366+TCP02.dgn

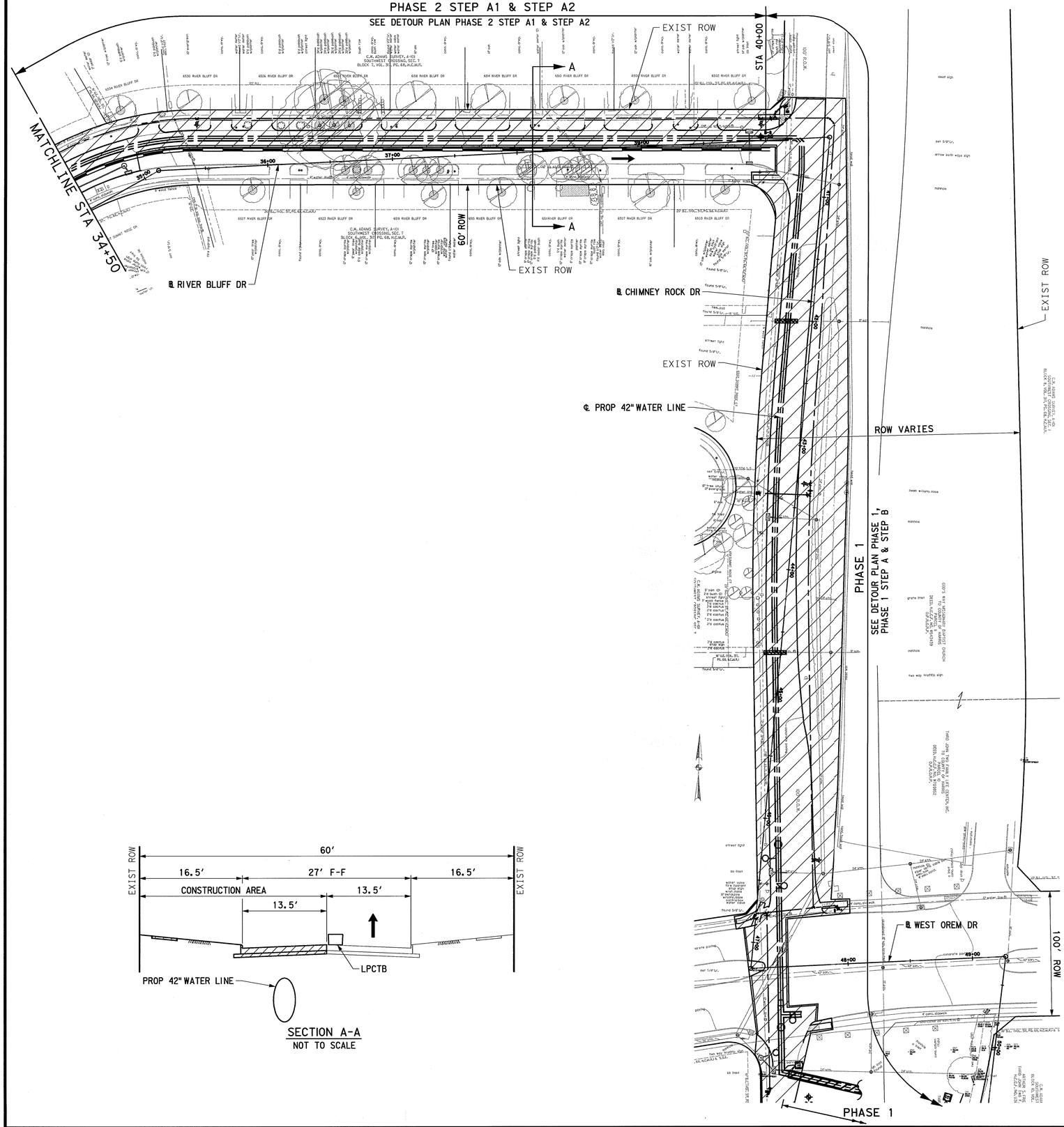

SECTION A-A
NOT TO SCALE

NOTES & LEGEND

1. SEE "TRAFFIC CONTROL GENERAL NOTES" AND "TRAFFIC CONTROL PLAN OVERALL LAYOUT AND CONSTRUCTION SEQUENCING" SHEETS FOR MORE INFORMATION.
2. CONSTRUCTION SHALL BE DURING OFF-PEAK HOURS 9:00 AM TO 4:00 PM WEEKDAYS. IF CONTRACTOR CHOOSES TO ALSO WORK ON WEEKENDS, HE OR SHE SHALL COORDINATE WITH THE CITY ENGINEER TO ENSURE THAT THE CITY ORDINANCES ON NOISE LEVEL AND HOURS OF OPERATION WITHIN RESIDENTIAL AREA ARE FOLLOWED PROPERLY.
3. ROAD MUST BE KEPT OPEN TO TRAFFIC AND CONTRACTOR MUST PROVIDE ADEQUATE OFF-DUTY UNIFORMED OFFICER, SIGN, ETC. TO PROVIDE COMPLETE SAFETY TO THE PUBLIC.
4. CONTRACTOR SHALL PROVIDE ACCESS TO ALL DRIVEWAYS ALONG THIS PROJECT AT ALL TIMES DURING CONSTRUCTION.
5. NO MORE TRENCHES OPENED AT ONE TIME THAN CAN BE BACKFILLED AND COMPACTED IN 8" LIFT, OR COVERED WITH STEEL PLATE ANCHORED PROPERLY AT THE END OF EACH WORKDAY. (NO TRENCH OR AUGER PIT LEFT OPEN OVERNIGHT.)
6. CONTRACTOR SHALL NOTIFY POLICE DEPARTMENT, FIRE DEPARTMENT, THE UNITED STATES POSTAL SERVICE, HOUSTON INDEPENDENT SCHOOL DISTRICT (HISD), AND NEIGHBORHOOD HOME OWNER ASSOCIATIONS PRIOR TO START OF CONSTRUCTION/ROAD CLOSURE.
7. SEE "TRAFFIC CONTROL PLAN OVERALL LAYOUT AND CONSTRUCTION SEQUENCING" SHEET 1 OF 3 FOR CONSTRUCTION SEQUENCING NOTES.

CONSTRUCTION AREA

DIRECTION OF TRAFFIC

LOW PROFILE CONCRETE TRAFFIC BARRIER

TEMPORARY SIGN

TYPE III BARRICADE



R6-2R 24"x30"

R6-2L 24"x30"

DURING CONSTRUCTION CONTRACTOR SHALL PLACE SIGNS R6-2R & R6-2L AT DRIVEWAYS ALONG THE LENGTH OF THE PROJECT.

No.	Date	Revisions	App.

SWTP
Surface Water Transmission Program

LAN
Lockwood, Andrews & Newnam, Inc.
A LEO A DALY COMPANY
2925 Briarpark Drive Houston, TX 77042

Nathelyne A. Kennedy & Associates
Civil & Structural Consulting Engineers
6200 SAVOY DR
SUITE 1250
HOUSTON, TEXAS 77036
(713) 988-0145

SURVEYED BY:
KUO & ASSOCIATES, INC.
C.O.H. Field Book P-

Nathelyne A. Kennedy & Associates
REGISTRATION # F-357

STATE OF TEXAS
A. SETAREHASEMAN
68184
LICENSED PROFESSIONAL ENGINEER
12/17/2010

CITY OF HOUSTON
DEPARTMENT OF PUBLIC WORKS AND ENGINEERING

SWTP CONTRACT 74A-1

TRAFFIC CONTROL PLAN
OVERALL LAYOUT AND
CONSTRUCTION SEQUENCING

SHEET 3 OF 3

WBS NO.
S-000900-0109-4

DRAWING SCALE
V: N/A H: 1"=40'

CITY OF HOUSTON PM
ARTHUR C. MORRIS, P.E.

SHEET NO. 79 OF 91

PUBLIC WORKS AND ENGINEERING
ACCEPTED AND FILED
48326
CITY DRAWING NUMBER
HOUSTON, TEXAS

12/17/2010 8:52:38 AM jcoel
I:\Projects\CUR+JOBS\1366\CADD\1366+TCP03.dgn

NOTES & LEGEND

1. SEE "TRAFFIC CONTROL GENERAL NOTES" AND "TRAFFIC CONTROL PLAN OVERALL LAYOUT AND CONSTRUCTION SEQUENCING" SHEETS FOR MORE INFORMATION.
2. CONSTRUCTION SHALL BE DURING OFF-PEAK HOURS 9:00 AM TO 4:00 PM WEEKDAYS. IF CONTRACTOR CHOOSES TO ALSO WORK ON WEEKENDS, HE OR SHE SHALL COORDINATE WITH THE CITY ENGINEER TO ENSURE THAT THE CITY ORDINANCES ON NOISE LEVEL AND HOURS OF OPERATION WITHIN RESIDENTIAL AREA ARE FOLLOWED PROPERLY.
3. ROAD MUST BE KEPT OPEN TO TRAFFIC AND CONTRACTOR MUST PROVIDE ADEQUATE OFF-DUTY UNIFORMED OFFICER, SIGN, ETC. TO PROVIDE COMPLETE SAFETY TO THE PUBLIC.
4. CONTRACTOR SHALL PROVIDE ACCESS TO ALL DRIVEWAYS ALONG THIS PROJECT AT ALL TIMES DURING CONSTRUCTION.
5. NO MORE TRENCHES OPENED AT ONE TIME THAN CAN BE BACKFILLED AND COMPACTED IN 8" LIFT, OR COVERED WITH STEEL PLATE ANCHORED PROPERLY AT THE END OF EACH WORKDAY. (NO TRENCH OR AUGER PIT LEFT OPEN OVERNIGHT.)
6. CONTRACTOR SHALL NOTIFY POLICE DEPARTMENT, FIRE DEPARTMENT, THE UNITED STATES POSTAL SERVICE, HOUSTON INDEPENDENT SCHOOL DISTRICT (HISD), AND NEIGHBORHOOD HOME OWNER ASSOCIATIONS PRIOR TO START OF CONSTRUCTION/ROAD CLOSURE.

CONSTRUCTION AREA

DIRECTION OF TRAFFIC

TEMPORARY SIGN

TYPE III BARRICADE

DRUMS

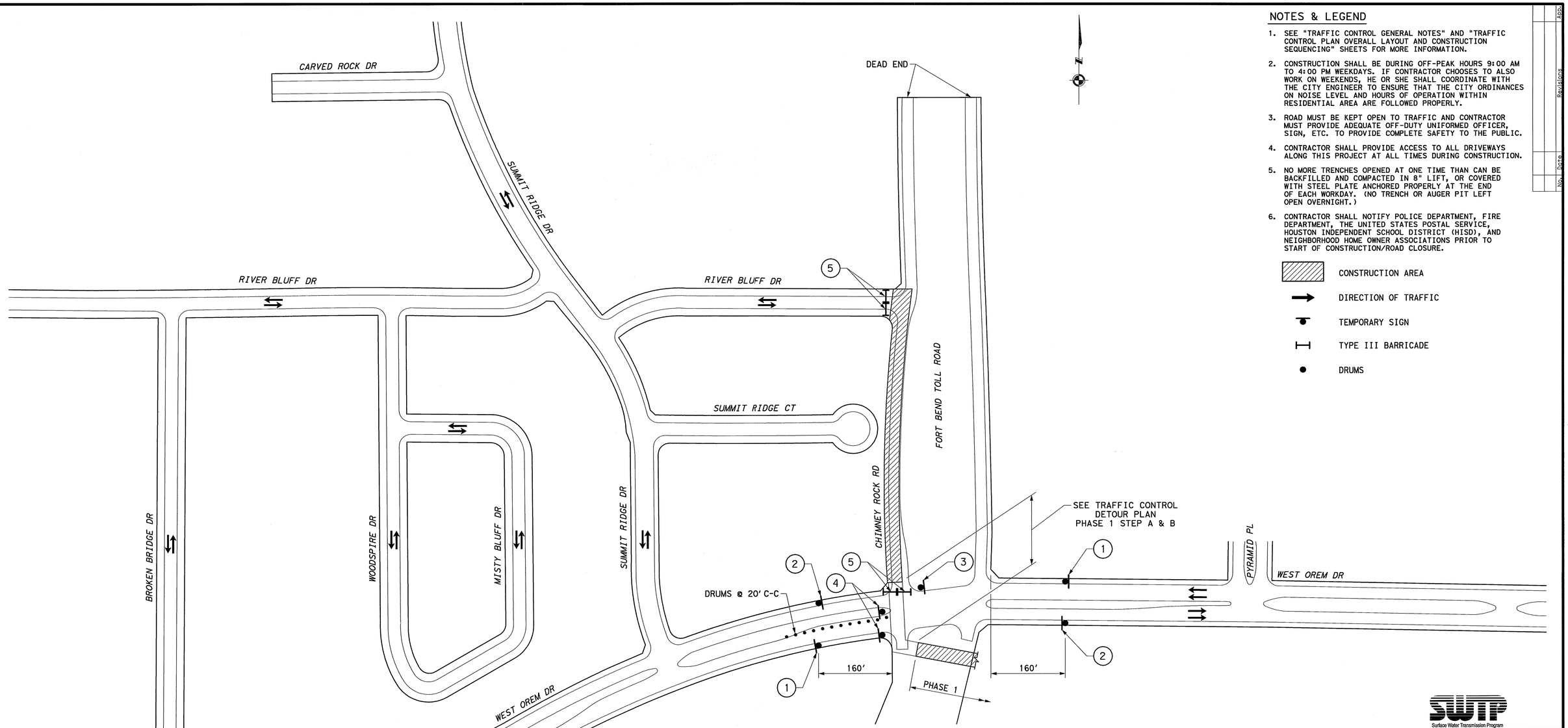

SIGN LEGEND

1. TYPE "A" FLASHING WARNING LIGHT (TYP) — UTILITY WORK AHEAD — CW21-7d 48"x48"
2. END ROAD WORK — G20-2a 48"x24"
3. R3-1 24"x24"
4. R3-2 24"x24"
5. ROAD CLOSED — R11-2 48"x30"; DO NOT ENTER — R5-1 30"x30"; MOUNTED ON TYPE III BARRICADE

SWTP Surface Water Transmission Program

Lockwood, Andrews & Newnam, Inc.
A LEO A DALY COMPANY
2925 Briarpark Drive Houston, TX 77042

Nathelyne A. Kennedy & Associates
Civil & Structural Consulting Engineers
6200 SAVOY DR
SUITE 1250
HOUSTON, TEXAS 77036
(713) 988-0145

Nathelyne A. Kennedy & Associates
REGISTRATION # F-357

STATE OF TEXAS
A. SETAREHASEMAN
68184
LICENSED PROFESSIONAL ENGINEER
12/17/2010

SURVEYED BY:
KUO & ASSOCIATES, INC.
C.O.H. Field Book P-

CITY OF HOUSTON
DEPARTMENT OF PUBLIC WORKS AND ENGINEERING

SWTP CONTRACT 74A-1

TRAFFIC CONTROL DETOUR PLAN PHASE 1

SHEET 1 OF 1

WBS NO.	S-000900-0109-4
DRAWING SCALE	
V: N/A	H: 1"=100'
CITY OF HOUSTON PM	
ARTHUR C. MORRIS, P.E.	
SHEET NO.	80 OF 91

PUBLIC WORKS AND ENGINEERING
ACCEPTED AND FILED
48826
CITY DRAWING NUMBER
HOUSTON, TEXAS

No.	Date	Revisions	Appr.

12/17/2010 8:53:18 AM jopel

I:\Projects\CUR+JOBS\1365\CADD\1365+DETOUR01.dgn

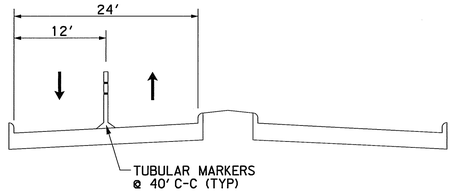

SECTION A-A
NOT TO SCALE

NOTES & LEGEND

1. SEE "TRAFFIC CONTROL GENERAL NOTES" AND "TRAFFIC CONTROL PLAN OVERALL LAYOUT AND CONSTRUCTION SEQUENCING" SHEETS FOR MORE INFORMATION.
2. CONSTRUCTION SHALL BE DURING OFF-PEAK HOURS 9:00 AM TO 4:00 PM WEEKDAYS. IF CONTRACTOR CHOOSES TO ALSO WORK ON WEEKENDS, HE OR SHE SHALL COORDINATE WITH THE CITY ENGINEER TO ENSURE THAT THE CITY ORDINANCES ON NOISE LEVEL AND HOURS OF OPERATION WITHIN RESIDENTIAL AREA ARE FOLLOWED PROPERLY.
3. ROAD MUST BE KEPT OPEN TO TRAFFIC AND CONTRACTOR MUST PROVIDE ADEQUATE OFF-DUTY UNIFORMED OFFICER, SIGN, ETC. TO PROVIDE COMPLETE SAFETY TO THE PUBLIC.
4. CONTRACTOR SHALL PROVIDE ACCESS TO ALL DRIVEWAYS ALONG THIS PROJECT AT ALL TIMES DURING CONSTRUCTION.
5. NO MORE TRENCHES OPENED AT ONE TIME THAN CAN BE BACKFILLED AND COMPACTED IN 8" LIFT, OR COVERED WITH STEEL PLATE ANCHORED PROPERLY AT THE END OF EACH WORKDAY. (NO TRENCH OR AUGER PIT LEFT OPEN OVERNIGHT.)
6. CONTRACTOR SHALL NOTIFY POLICE DEPARTMENT, FIRE DEPARTMENT, THE UNITED STATES POSTAL SERVICE, HOUSTON INDEPENDENT SCHOOL DISTRICT (HISD), AND NEIGHBORHOOD HOME OWNER ASSOCIATIONS PRIOR TO START OF CONSTRUCTION/ROAD CLOSURE.

CONSTRUCTION AREA
DIRECTION OF TRAFFIC
TEMPORARY SIGN
TYPE III BARRICADE
DRUMS
TUBULAR MARKERS

No.	Date	Revisions	App'd

SIGN LEGEND

1. TYPE "A" FLASHING WARNING LIGHT (TYP) — UTILITY WORK AHEAD — CW21-7d 48"x48"
2. LEFT LANE CLOSED — CW20-5L 48"x48" — 30"x12" AHEAD
3. CW4-2L 36"x36"
4. RIGHT LANE CLOSED — CW20-5R 48"x48" — 30"x12" AHEAD
5. DETOUR AHEAD — CW20-2d 48"x48"
6. CW4-2R 36"x36"
7. CW6-3 30"x30"
8. ROAD CLOSED — R11-2 48"x30" MOUNTED ON TYPE III BARR
9. END ROAD WORK — G20-2a 48"x24"
10. CW1-4L 30"x30"
11. CW1-4R 30"x30"

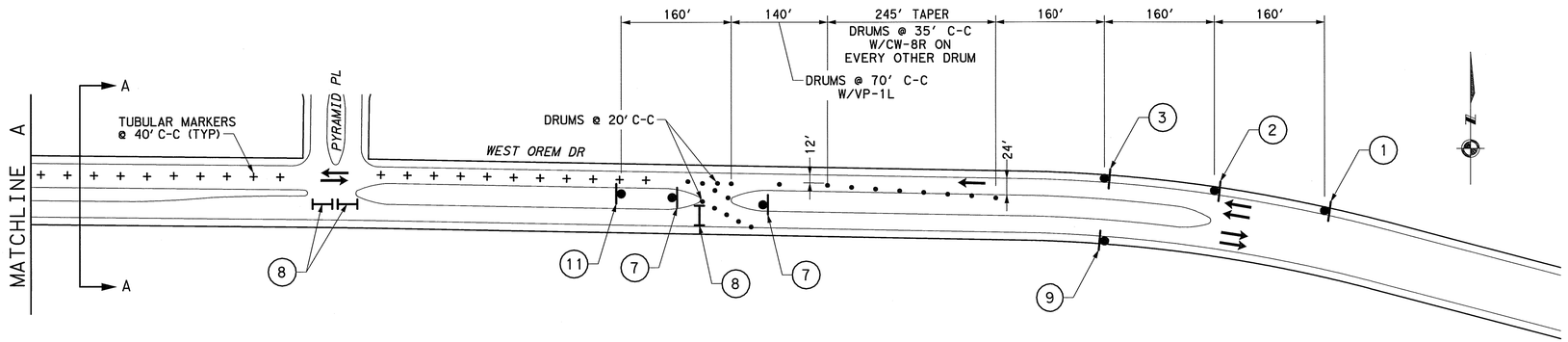

SWTP
Surface Water Transmission Program

LAN
Lockwood, Andrews & Newnam, Inc.
A LEO A DALY COMPANY
2925 Briarpark Drive Houston, TX 77042

Nathelyne A. Kennedy & Associates
Civil & Structural Consulting Engineers
6200 SAVOY DR
SUITE 1250
HOUSTON, TEXAS 77036
(713) 988-0145

Nathelyne A. Kennedy & Associates
REGISTRATION # F-357

STATE OF TEXAS
A. SETAREHASEMAN
68184
LICENSED PROFESSIONAL ENGINEER
12/17/2010

SURVEYED BY:
KUO & ASSOCIATES, INC.
C.O.H. Field Book P-

CITY OF HOUSTON
DEPARTMENT OF PUBLIC WORKS AND ENGINEERING

SWTP CONTRACT 74A-1

TRAFFIC CONTROL
DETOUR PLAN
PHASE 1 STEP A

SHEET 1 OF 1

WBS NO.	S-000900-0109-4
DRAWING SCALE	
V: N/A	H: 1"=100'
CITY OF HOUSTON PM	
ARTHUR C. MORRIS, P.E.	
SHEET NO.	81 OF 91

PUBLIC WORKS AND ENGINEERING
ACCEPTED AND FILED
48326
CITY DRAWING NUMBER
HOUSTON, TEXAS

I:\Projects\CUR+\085\1366\CAD\1366+DETOUR02a.dgn
12/17/2010 9:45:44 AM jspel

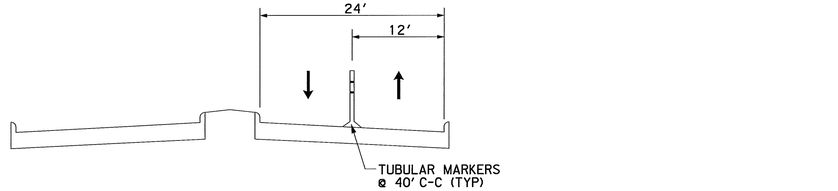

SECTION A-A
NOT TO SCALE

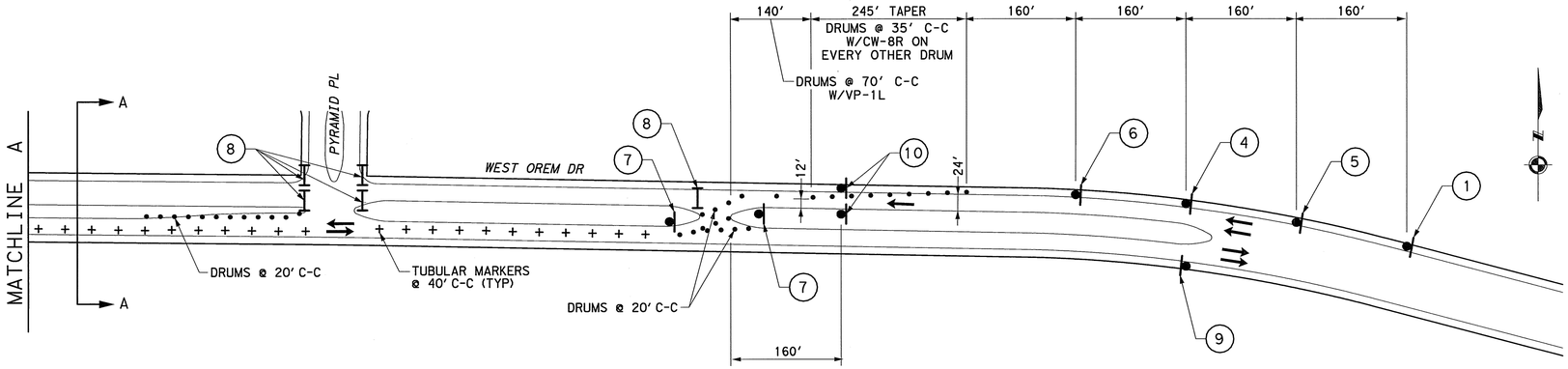

NOTES & LEGEND

1. SEE "TRAFFIC CONTROL GENERAL NOTES" AND "TRAFFIC CONTROL PLAN OVERALL LAYOUT AND CONSTRUCTION SEQUENCING" SHEETS FOR MORE INFORMATION.
2. CONSTRUCTION SHALL BE DURING OFF-PEAK HOURS 9:00 AM TO 4:00 PM WEEKDAYS. IF CONTRACTOR CHOOSES TO ALSO WORK ON WEEKENDS, HE OR SHE SHALL COORDINATE WITH THE CITY ENGINEER TO ENSURE THAT THE CITY ORDINANCES ON NOISE LEVEL AND HOURS OF OPERATION WITHIN RESIDENTIAL AREA ARE FOLLOWED PROPERLY.
3. ROAD MUST BE KEPT OPEN TO TRAFFIC AND CONTRACTOR MUST PROVIDE ADEQUATE OFF-DUTY UNIFORMED OFFICER, SIGN, ETC. TO PROVIDE COMPLETE SAFETY TO THE PUBLIC.
4. CONTRACTOR SHALL PROVIDE ACCESS TO ALL DRIVEWAYS ALONG THIS PROJECT AT ALL TIMES DURING CONSTRUCTION.
5. NO MORE TRENCHES OPENED AT ONE TIME THAN CAN BE BACKFILLED AND COMPACTED IN 8" LIFT, OR COVERED WITH STEEL PLATE ANCHORED PROPERLY AT THE END OF EACH WORKDAY. (NO TRENCH OR AUGER PIT LEFT OPEN OVERNIGHT.)
6. CONTRACTOR SHALL NOTIFY POLICE DEPARTMENT, FIRE DEPARTMENT, THE UNITED STATES POSTAL SERVICE, HOUSTON INDEPENDENT SCHOOL DISTRICT (HISD), AND NEIGHBORHOOD HOME OWNER ASSOCIATIONS PRIOR TO START OF CONSTRUCTION/ROAD CLOSURE.

- CONSTRUCTION AREA
- DIRECTION OF TRAFFIC
- TEMPORARY SIGN
- TYPE III BARRICADE
- DRUMS
- TUBULAR MARKERS

SIGN LEGEND

1. TYPE "A" FLASHING WARNING LIGHT (TYP) — UTILITY WORK AHEAD — CW21-7d 48"x48"
2. LEFT LANE CLOSED — CW20-5L 48"x48" — 30"x12" AHEAD
3. CW4-2L 36"x36"
4. RIGHT LANE CLOSED — CW20-5R 48"x48" — 30"x12" AHEAD
5. DETOUR AHEAD — CW20-2d 48"x48"
6. CW4-2R 36"x36"
7. CW6-3 30"x30"
8. ROAD CLOSED — R11-2 48"x30" MOUNTED ON TYPE III BARR
9. END ROAD WORK — G20-2a 48"x24"
10. CW1-4L 30"x30"
11. CW1-4R 30"x30"

SWTP
Surface Water Transmission Program

Lockwood, Andrews & Newnam, Inc.
A LEO A DALY COMPANY
2925 Briarpark Drive Houston, TX 77042

Nathelyne A. Kennedy & Associates
Civil & Structural Consulting Engineers
6200 SAVOY DR
SUITE 1250
HOUSTON, TEXAS 77036
(713) 988-0145

Nathelyne A. Kennedy & Associates
REGISTRATION # F-357

STATE OF TEXAS
A. SETAREHASEMAN
68184
LICENSED
PROFESSIONAL ENGINEER
12/17/2010

SURVEYED BY:
KUO & ASSOCIATES, INC.
C.O.H. Field Book P-

CITY OF HOUSTON
DEPARTMENT OF PUBLIC WORKS AND ENGINEERING

SWTP CONTRACT 74A-1

TRAFFIC CONTROL
DETOUR PLAN
PHASE 1 STEP B

SHEET 1 OF 1

WBS NO.	S-000900-0109-4
DRAWING SCALE	
V: N/A	H: 1"=100'
CITY OF HOUSTON PM	
ARTHUR C. MORRIS, P.E.	
SHEET NO.	82 OF 91

PUBLIC WORKS AND ENGINEERING
ACCEPTED AND FILED
48326
CITY DRAWING NUMBER
HOUSTON, TEXAS

No.	Date	Revisions	App'd

12/17/2010 09:46:00 AM jopel

I:\Projects\CUR+\085\1366\CADD\1366DETOUR02b.dgn

SIGN LEGEND

(1) TYPE "A" FLASHING WARNING LIGHT (TYP)
UTILITY WORK AHEAD
CW21-7d 48"x48"

(2) DETOUR AHEAD
CW20-2d 48"x48"

(3)
SUMMIT RIDGE DR M4-9N
RIVER BLUFF DR M4-9N
WOODSPIRE DR M4-9N
MISTY BLUFF DR M4-9N
DETOUR M4-9S 30"x30"

(4)
SUMMIT RIDGE DR M4-9N
RIVER BLUFF DR M4-9N
WOODSPIRE DR M4-9N
MISTY BLUFF DR M4-9N
DETOUR M4-9aR 30"x30"

(5)
SUMMIT RIDGE DR M4-9N
RIVER BLUFF DR M4-9N
WOODSPIRE DR M4-9N
MISTY BLUFF DR M4-9N
DETOUR M4-9R 30"x30"

(6)
SUMMIT RIDGE DR M4-9N
WOODSPIRE DR M4-9N
MISTY BLUFF DR M4-9N
DETOUR M4-9aL 30"x30"

(7)
SUMMIT RIDGE DR M4-9N
WOODSPIRE DR M4-9N
MISTY BLUFF DR M4-9N
DETOUR M4-9L 30"x30"

(8) R3-1 24"x24"

(9) R3-2 24"x24"

(10) ROAD CLOSED
DO NOT ENTER
R11-2 48"x30"
R5-1 30"x30"
MOUNTED ON TYPE III BARRICADE

(11) END ROAD WORK
G20-2a 48"x24"

(12) CW20-7a 36"x36"

(13)
SUMMIT RIDGE DR M4-9N
WEST OREM DR M4-9N
RIVER BLUFF DR M4-9N
SUMMIT RIDGE CT M4-9N
DETOUR M4-9S 30"x30"

(14)
SUMMIT RIDGE DR M4-9N
WEST OREM DR M4-9N
RIVER BLUFF DR M4-9N
SUMMIT RIDGE CT M4-9N
DETOUR M4-9aR 30"x30"

(15)
SUMMIT RIDGE DR M4-9N
WEST OREM DR M4-9N
RIVER BLUFF DR M4-9N
SUMMIT RIDGE CT M4-9N
DETOUR M4-9R 30"x30"

(16)
SUMMIT RIDGE DR M4-9N
WEST OREM DR M4-9N
RIVER BLUFF DR M4-9N
SUMMIT RIDGE CT M4-9N
DETOUR M4-9aL 30"x30"

(17)
SUMMIT RIDGE DR M4-9N
WEST OREM DR M4-9N
RIVER BLUFF DR M4-9N
SUMMIT RIDGE CT M4-9N
DETOUR M4-9L 30"x30"

(18)
SUMMIT RIDGE DR M4-9N
WOODSPIRE DR M4-9N
MISTY BLUFF DR M4-9N
DETOUR M4-9R 30"x30"

(19)
SUMMIT RIDGE DR M4-9N
WOODSPIRE DR M4-9N
MISTY BLUFF DR M4-9N
DETOUR M4-9S 30"x30"

(20)
SUMMIT RIDGE DR M4-9N
RIVER BLUFF DR M4-9N
SUMMIT RIDGE CT M4-9N
DETOUR M4-9L 30"x30"

(21)
SUMMIT RIDGE CT M4-9N
DETOUR M4-9S 30"x30"

(22)
SUMMIT RIDGE CT M4-9N
DETOUR M4-9aR 30"x30"

(23)
SUMMIT RIDGE CT M4-9N
DETOUR M4-9R 30"x30"

(24)
SUMMIT RIDGE DR M4-9N
RIVER BLUFF DR M4-9N
SUMMIT RIDGE CT M4-9N
DETOUR M4-9S 30"x30"

(25)
SUMMIT RIDGE DR M4-9N
RIVER BLUFF DR M4-9N
SUMMIT RIDGE CT M4-9N
DETOUR M4-9L 30"x30"

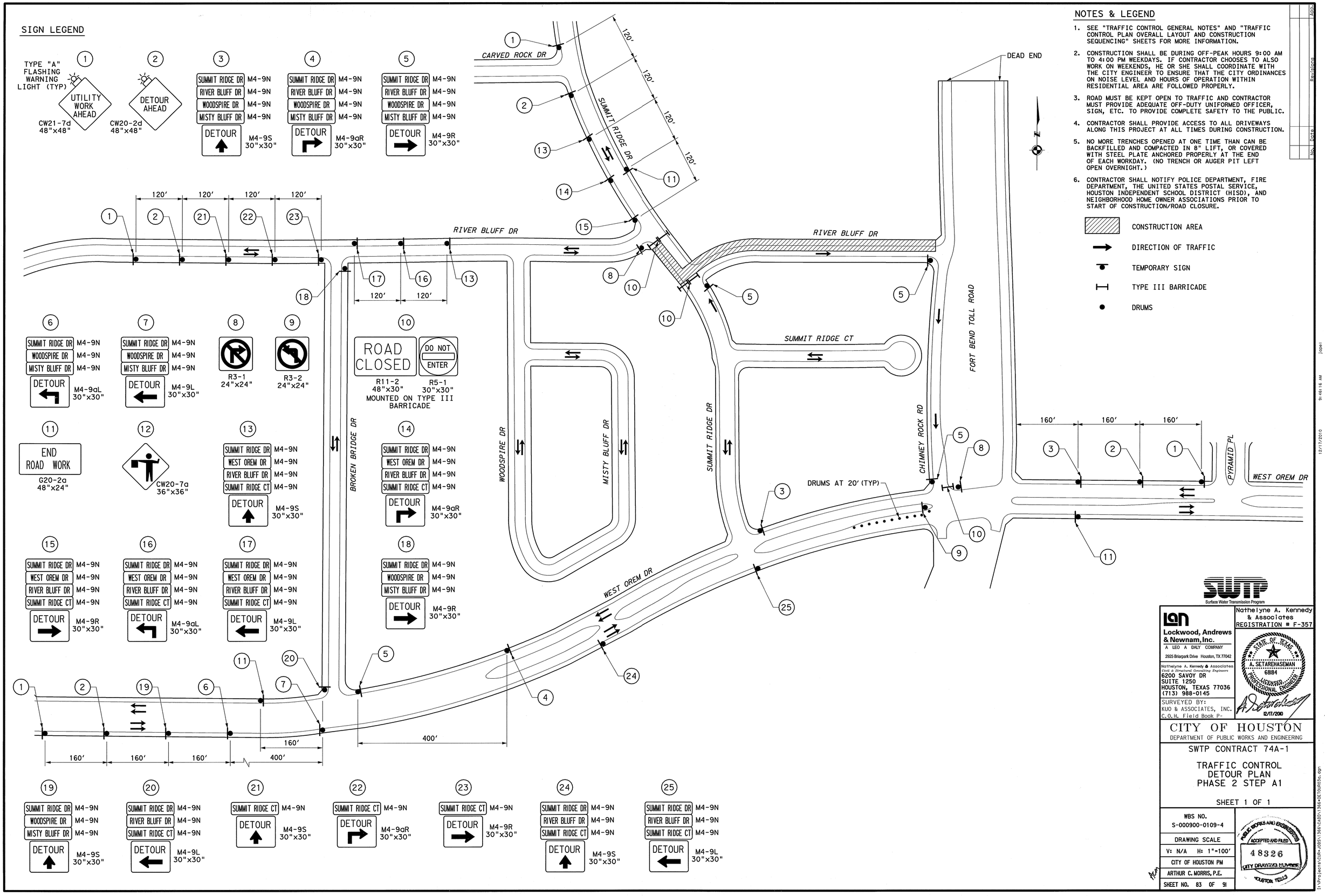

NOTES & LEGEND

1. SEE "TRAFFIC CONTROL GENERAL NOTES" AND "TRAFFIC CONTROL PLAN OVERALL LAYOUT AND CONSTRUCTION SEQUENCING" SHEETS FOR MORE INFORMATION.
2. CONSTRUCTION SHALL BE DURING OFF-PEAK HOURS 9:00 AM TO 4:00 PM WEEKDAYS. IF CONTRACTOR CHOOSES TO ALSO WORK ON WEEKENDS, HE OR SHE SHALL COORDINATE WITH THE CITY ENGINEER TO ENSURE THAT THE CITY ORDINANCES ON NOISE LEVEL AND HOURS OF OPERATION WITHIN RESIDENTIAL AREA ARE FOLLOWED PROPERLY.
3. ROAD MUST BE KEPT OPEN TO TRAFFIC AND CONTRACTOR MUST PROVIDE ADEQUATE OFF-DUTY UNIFORMED OFFICER, SIGN, ETC. TO PROVIDE COMPLETE SAFETY TO THE PUBLIC.
4. CONTRACTOR SHALL PROVIDE ACCESS TO ALL DRIVEWAYS ALONG THIS PROJECT AT ALL TIMES DURING CONSTRUCTION.
5. NO MORE TRENCHES OPENED AT ONE TIME THAN CAN BE BACKFILLED AND COMPACTED IN 8" LIFT, OR COVERED WITH STEEL PLATE ANCHORED PROPERLY AT THE END OF EACH WORKDAY. (NO TRENCH OR AUGER PIT LEFT OPEN OVERNIGHT.)
6. CONTRACTOR SHALL NOTIFY POLICE DEPARTMENT, FIRE DEPARTMENT, THE UNITED STATES POSTAL SERVICE, HOUSTON INDEPENDENT SCHOOL DISTRICT (HISD), AND NEIGHBORHOOD HOME OWNER ASSOCIATIONS PRIOR TO START OF CONSTRUCTION/ROAD CLOSURE.

CONSTRUCTION AREA
DIRECTION OF TRAFFIC
TEMPORARY SIGN
TYPE III BARRICADE
DRUMS

No.	Date	Revisions	Appd

SWTP
Surface Water Transmission Program

LAN
Lockwood, Andrews & Newnam, Inc.
A LEO A DALY COMPANY
2925 Briarpark Drive Houston, TX 77042

Nathelyne A. Kennedy & Associates
Civil & Structural Consulting Engineers
6200 SAVOY DR
SUITE 1250
HOUSTON, TEXAS 77036
(713) 988-0145

Nathelyne A. Kennedy & Associates
REGISTRATION # F-357

STATE OF TEXAS
A. SETAREHASEMAN
68184
LICENSED PROFESSIONAL ENGINEER
12/17/2010

SURVEYED BY:
KUO & ASSOCIATES, INC.
C.O.H. Field Book P-

CITY OF HOUSTON
DEPARTMENT OF PUBLIC WORKS AND ENGINEERING

SWTP CONTRACT 74A-1

TRAFFIC CONTROL
DETOUR PLAN
PHASE 2 STEP A1

SHEET 1 OF 1

WBS NO.	S-000900-0109-4
DRAWING SCALE	
V: N/A	H: 1"=100'
CITY OF HOUSTON PM	
ARTHUR C. MORRIS, P.E.	
SHEET NO.	83 OF 91

PUBLIC WORKS AND ENGINEERING
ACCEPTED AND FILED
48326
CITY DRAWING NUMBER
HOUSTON, TEXAS

12/17/2010 9:46:16 AM jpeel
I:\Projects\COH_DOS\1366\CADD\1366-DETOUR03a.dgn

SIGN LEGEND

1. TYPE "A" FLASHING WARNING LIGHT (TYP)
   UTILITY WORK AHEAD
   CW21-7d 48"x48"
2. DETOUR AHEAD
   CW20-2d 48"x48"
3. RIVER BLUFF DR M4-9N
   WOODSPIRE DR M4-9N
   MISTY BLUFF DR M4-9N
   DETOUR M4-9S 30"x30"
4. RIVER BLUFF DR M4-9N
   WOODSPIRE DR M4-9N
   MISTY BLUFF DR M4-9N
   DETOUR M4-9aR 30"x30"
5. RIVER BLUFF DR M4-9N
   WOODSPIRE DR M4-9N
   MISTY BLUFF DR M4-9N
   DETOUR M4-9R 30"x30"
6. RIVER BLUFF DR M4-9N
   WOODSPIRE DR M4-9N
   MISTY BLUFF DR M4-9N
   DETOUR M4-9aL 30"x30"
7. RIVER BLUFF DR M4-9N
   WOODSPIRE DR M4-9N
   MISTY BLUFF DR M4-9N
   DETOUR M4-9L 30"x30"
8. ROAD CLOSED R11-2 48"x30"
   DO NOT ENTER R5-1 30"x30"
   MOUNTED ON TYPE III BARRICADE
9. END ROAD WORK G20-2a 48"x24"
10. CW20-7a 36"x36"
11. SUMMIT RIDGE DR M4-9N
    DETOUR M4-9S 30"x30"
12. SUMMIT RIDGE DR M4-9N
    DETOUR M4-9aR 30"x30"
13. SUMMIT RIDGE DR M4-9N
    DETOUR M4-9R 30"x30"
14. SUMMIT RIDGE DR M4-9N
    DETOUR M4-9aL 30"x30"
15. SUMMIT RIDGE DR M4-9N
    DETOUR M4-9L 30"x30"
16. WOODSPIRE DR M4-9N
    MISTY BLUFF DR M4-9N
    DETOUR M4-9R 30"x30"

NOTES & LEGEND

1. SEE "TRAFFIC CONTROL GENERAL NOTES" AND "TRAFFIC CONTROL PLAN OVERALL LAYOUT AND CONSTRUCTION SEQUENCING" SHEETS FOR MORE INFORMATION.
2. CONSTRUCTION SHALL BE DURING OFF-PEAK HOURS 9:00 AM TO 4:00 PM WEEKDAYS. IF CONTRACTOR CHOOSES TO ALSO WORK ON WEEKENDS, HE OR SHE SHALL COORDINATE WITH THE CITY ENGINEER TO ENSURE THAT THE CITY ORDINANCES ON NOISE LEVEL AND HOURS OF OPERATION WITHIN RESIDENTIAL AREA ARE FOLLOWED PROPERLY.
3. ROAD MUST BE KEPT OPEN TO TRAFFIC AND CONTRACTOR MUST PROVIDE ADEQUATE OFF-DUTY UNIFORMED OFFICER, SIGN, ETC. TO PROVIDE COMPLETE SAFETY TO THE PUBLIC.
4. CONTRACTOR SHALL PROVIDE ACCESS TO ALL DRIVEWAYS ALONG THIS PROJECT AT ALL TIMES DURING CONSTRUCTION.
5. NO MORE TRENCHES OPENED AT ONE TIME THAN CAN BE BACKFILLED AND COMPACTED IN 8" LIFT, OR COVERED WITH STEEL PLATE ANCHORED PROPERLY AT THE END OF EACH WORKDAY. (NO TRENCH OR AUGER PIT LEFT OPEN OVERNIGHT.)
6. CONTRACTOR SHALL NOTIFY POLICE DEPARTMENT, FIRE DEPARTMENT, THE UNITED STATES POSTAL SERVICE, HOUSTON INDEPENDENT SCHOOL DISTRICT (HISD), AND NEIGHBORHOOD HOME OWNER ASSOCIATIONS PRIOR TO START OF CONSTRUCTION/ROAD CLOSURE.
7. IN PHASE 2 STEP A2, CONTRACTOR SHALL CONSTRUCT THE 42" WATER LINE ALONG SUMMIT RIDGE DR DURING DAY TIME, AND REOPEN ALL TRAFFIC LANES ON SUMMIT RIDGE DR DURING NIGHT TIME. RIVER BLUFF DR CAN REMAIN CLOSED USING TWO (2) BARRICADES WITH "ROAD CLOSED" AND "DO NOT ENTER" SIGNS AT THE TERMINAL OF RIVER BLUFF DR/SUMMIT RIDGE DR INTERSECTION.

CONSTRUCTION AREA
DIRECTION OF TRAFFIC
TEMPORARY SIGN
TYPE III BARRICADE
FLAGMAN
DRUMS

No.	Date	Revisions	Appr.

SWTP Surface Water Transmission Program

Lockwood, Andrews & Newnam, Inc.
A LEO A DALY COMPANY
2925 Briarpark Drive Houston, TX 77042

Nathelyne A. Kennedy & Associates
Civil & Structural Consulting Engineers
6200 SAVOY DR
SUITE 1250
HOUSTON, TEXAS 77036
(713) 988-0145

SURVEYED BY:
KUO & ASSOCIATES, INC.
C.O.H. Field Book P-

Nathelyne A. Kennedy & Associates
REGISTRATION # F-357

STATE OF TEXAS
A. SETARCHASEMAN
68184
LICENSED PROFESSIONAL ENGINEER
12/17/2010

CITY OF HOUSTON
DEPARTMENT OF PUBLIC WORKS AND ENGINEERING

SWTP CONTRACT 74A-1

TRAFFIC CONTROL
DETOUR PLAN
PHASE 2 STEP A2

SHEET 1 OF 1

WBS NO.
S-000900-0109-4

DRAWING SCALE
V: N/A H: 1"=100'

CITY OF HOUSTON PM
ARTHUR C. MORRIS, P.E.

SHEET NO. 84 OF 91

PUBLIC WORKS AND ENGINEERING
ACCEPTED AND FILED
48826
CITY DRAWING NUMBER
HOUSTON, TEXAS

12/17/2010 9:46:34 AM jpel

I:\Projects\CUR-JOBS\1366\CADD\1366-DETOUR03b.dgn

SIGN LEGEND

1. TYPE "A" FLASHING WARNING LIGHT (TYP) — UTILITY WORK AHEAD — CW21-7d 48"x48"
2. END ROAD WORK — G20-2a 48"x24"
3. DO NOT ENTER — R5-1 30"x30"
4. ONE WAY → — R6-2R 24"x30"
5. ONE WAY ← — R6-2L 24"x30"
6. DETOUR AHEAD — CW20-2d 48"x48"
7. HILLCROFT AVE M4-9N; COACHCREEK DR M4-9N; RIVER BLUFF DR M4-9N; DETOUR ↑ — M4-9S 30"x30"
8. HILLCROFT AVE M4-9N; COACHCREEK DR M4-9N; RIVER BLUFF DR M4-9N; DETOUR → — M4-9aR 30"x30"
9. HILLCROFT AVE M4-9N; COACHCREEK DR M4-9N; RIVER BLUFF DR M4-9N; DETOUR → — M4-9R 30"x30"
10. HILLCROFT AVE M4-9N; DETOUR → — M4-9R 30"x30"
11. HILLCROFT AVE M4-9N; DETOUR ← — M4-9L 30"x30"

NOTES & LEGEND

1. SEE "TRAFFIC CONTROL GENERAL NOTES" AND "TRAFFIC CONTROL PLAN OVERALL LAYOUT AND CONSTRUCTION SEQUENCING" SHEETS FOR MORE INFORMATION.
2. CONSTRUCTION SHALL BE DURING OFF-PEAK HOURS 9:00 AM TO 4:00 PM WEEKDAYS. IF CONTRACTOR CHOOSES TO ALSO WORK ON WEEKENDS, HE OR SHE SHALL COORDINATE WITH THE CITY ENGINEER TO ENSURE THAT THE CITY ORDINANCES ON NOISE LEVEL AND HOURS OF OPERATION WITHIN RESIDENTIAL AREA ARE FOLLOWED PROPERLY.
3. ROAD MUST BE KEPT OPEN TO TRAFFIC AND CONTRACTOR MUST PROVIDE ADEQUATE OFF-DUTY UNIFORMED OFFICER, SIGN, ETC. TO PROVIDE COMPLETE SAFETY TO THE PUBLIC.
4. CONTRACTOR SHALL PROVIDE ACCESS TO ALL DRIVEWAYS ALONG THIS PROJECT AT ALL TIMES DURING CONSTRUCTION.
5. NO MORE TRENCHES OPENED AT ONE TIME THAN CAN BE BACKFILLED AND COMPACTED IN 8" LIFT, OR COVERED WITH STEEL PLATE ANCHORED PROPERLY AT THE END OF EACH WORKDAY. (NO TRENCH OR AUGER PIT LEFT OPEN OVERNIGHT.)
6. CONTRACTOR SHALL NOTIFY POLICE DEPARTMENT, FIRE DEPARTMENT, THE UNITED STATES POSTAL SERVICE, HOUSTON INDEPENDENT SCHOOL DISTRICT (HISD), AND NEIGHBORHOOD HOME OWNER ASSOCIATIONS PRIOR TO START OF CONSTRUCTION/ROAD CLOSURE.

CONSTRUCTION AREA
DIRECTION OF TRAFFIC
TEMPORARY SIGN
TYPE III BARRICADE

DUBLIN ST
DUNLAP DR
HILLCROFT AVE
COACHCREEK DR
RIVER STONE DR
RIVER BLUFF DR
RIVER BLUFF DRIVE
LOST THICKET DR
OAKMANTLE DR
FIREROCK DR
ROCKY BLUFF DR
WOOD RIVER DR
MISTY ARBOR DR
WEST OREM DR
160'
120'
400'
MATCHLINE A

Surface Water Transmission Program

Lockwood, Andrews & Newnam, Inc.
A LEO A DALY COMPANY
2925 Briarpark Drive Houston, TX 77042

Nathelyne A. Kennedy & Associates
Civil & Structural Consulting Engineers
6200 SAVOY DR
SUITE 1250
HOUSTON, TEXAS 77036
(713) 988-0145

SURVEYED BY:
KUO & ASSOCIATES, INC.
C.O.H. Field Book P-

Nathelyne A. Kennedy & Associates
REGISTRATION # F-357

STATE OF TEXAS
A. SETAREHASEMAN
68184
LICENSED PROFESSIONAL ENGINEER
12/17/2010

CITY OF HOUSTON
DEPARTMENT OF PUBLIC WORKS AND ENGINEERING

SWTP CONTRACT 74A-1

TRAFFIC CONTROL
DETOUR PLAN
PHASE 2 STEP B

SHEET 1 OF 2

WBS NO.
S-000900-0109-4

DRAWING SCALE
V: N/A H: 1"=100'

CITY OF HOUSTON PM
ARTHUR C. MORRIS, P.E.

SHEET NO. 85 OF 91

PUBLIC WORKS AND ENGINEERING
ACCEPTED AND FILED
48326
CITY DRAWINGS FOR SUBMISSION
HOUSTON, TEXAS

Add'n | Revisions | No. | Date | Init

12/17/2010
9:46:50 AM jpeel
I:\Projects\CUR+JOBS\1366\CAD\1366+DETOUR04s.dgn

SIGN LEGEND

1. TYPE "A" FLASHING WARNING LIGHT (TYP) — UTILITY WORK AHEAD — CW21-7d 48"x48"
2. END ROAD WORK — G20-2a 48"x24"
3. DO NOT ENTER — R5-1 30"x30"
4. ONE WAY → — R6-2R 24"x30"
5. ONE WAY ← — R6-2L 24"x30"
6. DETOUR AHEAD — CW20-2d 48"x48"
7. HILLCROFT AVE M4-9N; COACHCREEK DR M4-9N; RIVER BLUFF DR M4-9N; DETOUR → — M4-9S 30"x30"
8. HILLCROFT AVE M4-9N; COACHCREEK DR M4-9N; RIVER BLUFF DR M4-9N; DETOUR → — M4-9aR 30"x30"
9. HILLCROFT AVE M4-9N; COACHCREEK DR M4-9N; RIVER BLUFF DR M4-9N; DETOUR → — M4-9R 30"x30"
10. HILLCROFT AVE M4-9N; DETOUR → — M4-9R 30"x30"

NOTES & LEGEND

1. SEE "TRAFFIC CONTROL GENERAL NOTES" AND "TRAFFIC CONTROL PLAN OVERALL LAYOUT AND CONSTRUCTION SEQUENCING" SHEETS FOR MORE INFORMATION.
2. CONSTRUCTION SHALL BE DURING OFF-PEAK HOURS 9:00 AM TO 4:00 PM WEEKDAYS. IF CONTRACTOR CHOOSES TO ALSO WORK ON WEEKENDS, HE OR SHE SHALL COORDINATE WITH THE CITY ENGINEER TO ENSURE THAT THE CITY ORDINANCES ON NOISE LEVEL AND HOURS OF OPERATION WITHIN RESIDENTIAL AREA ARE FOLLOWED PROPERLY.
3. ROAD MUST BE KEPT OPEN TO TRAFFIC AND CONTRACTOR MUST PROVIDE ADEQUATE OFF-DUTY UNIFORMED OFFICER, SIGN, ETC. TO PROVIDE COMPLETE SAFETY TO THE PUBLIC.
4. CONTRACTOR SHALL PROVIDE ACCESS TO ALL DRIVEWAYS ALONG THIS PROJECT AT ALL TIMES DURING CONSTRUCTION.
5. NO MORE TRENCHES OPENED AT ONE TIME THAN CAN BE BACKFILLED AND COMPACTED IN 8" LIFT, OR COVERED WITH STEEL PLATE ANCHORED PROPERLY AT THE END OF EACH WORKDAY. (NO TRENCH OR AUGER PIT LEFT OPEN OVERNIGHT.)
6. CONTRACTOR SHALL NOTIFY POLICE DEPARTMENT, FIRE DEPARTMENT, THE UNITED STATES POSTAL SERVICE, HOUSTON INDEPENDENT SCHOOL DISTRICT (HISD), AND NEIGHBORHOOD HOME OWNER ASSOCIATIONS PRIOR TO START OF CONSTRUCTION/ROAD CLOSURE.

CONSTRUCTION AREA

DIRECTION OF TRAFFIC

TEMPORARY SIGN

TYPE III BARRICADE

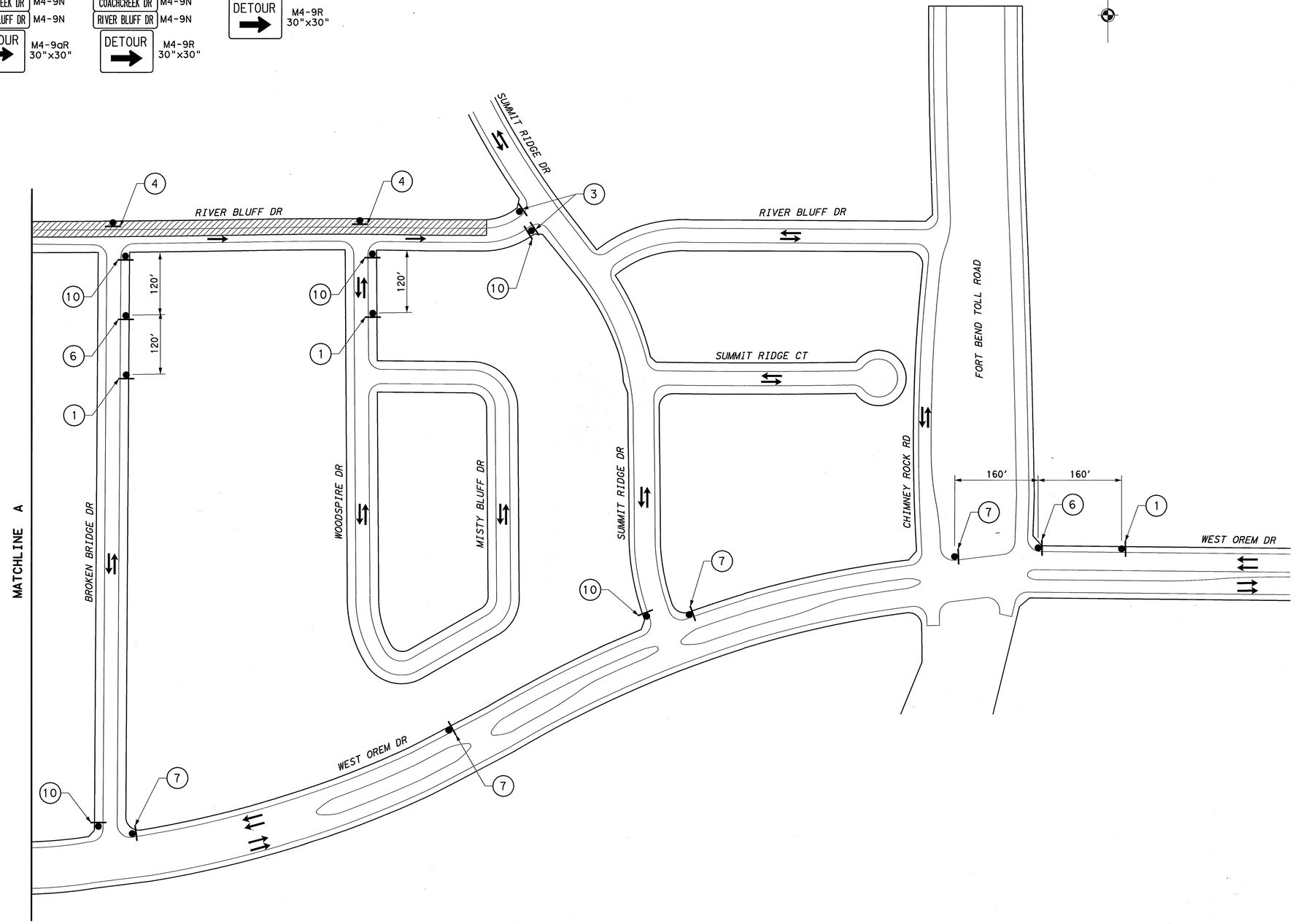

Surface Water Transmission Program

Lockwood, Andrews & Newnam, Inc.
A LEO A DALY COMPANY
2925 Briarpark Drive Houston, TX 77042

Nathelyne A. Kennedy & Associates
Civil & Structural Consulting Engineers
6200 SAVOY DR
SUITE 1250
HOUSTON, TEXAS 77036
(713) 988-0145

Nathelyne A. Kennedy & Associates
REGISTRATION # F-357

STATE OF TEXAS
A. SETAREHASEMAN
68184
LICENSED PROFESSIONAL ENGINEER
12/17/2010

SURVEYED BY:
KUO & ASSOCIATES, INC.
C.O.H. Field Book P-

CITY OF HOUSTON
DEPARTMENT OF PUBLIC WORKS AND ENGINEERING

SWTP CONTRACT 74A-1

TRAFFIC CONTROL
DETOUR PLAN
PHASE 2 STEP B

SHEET 2 OF 2

WBS NO.
S-000900-0109-4

DRAWING SCALE
V: N/A H: 1"=100'

CITY OF HOUSTON PM
ARTHUR C. MORRIS, P.E.

SHEET NO. 86 OF 91

ACCEPTED AND FILED
48326
CITY DRAWING NUMBER

No.	Date	Revisions	ASD

12/17/2010

jopel 9:47:04 AM 12/17/2010

I:\Projects\CDR+JOBS\1366\CADD\1366+DETOURS4b.dgn

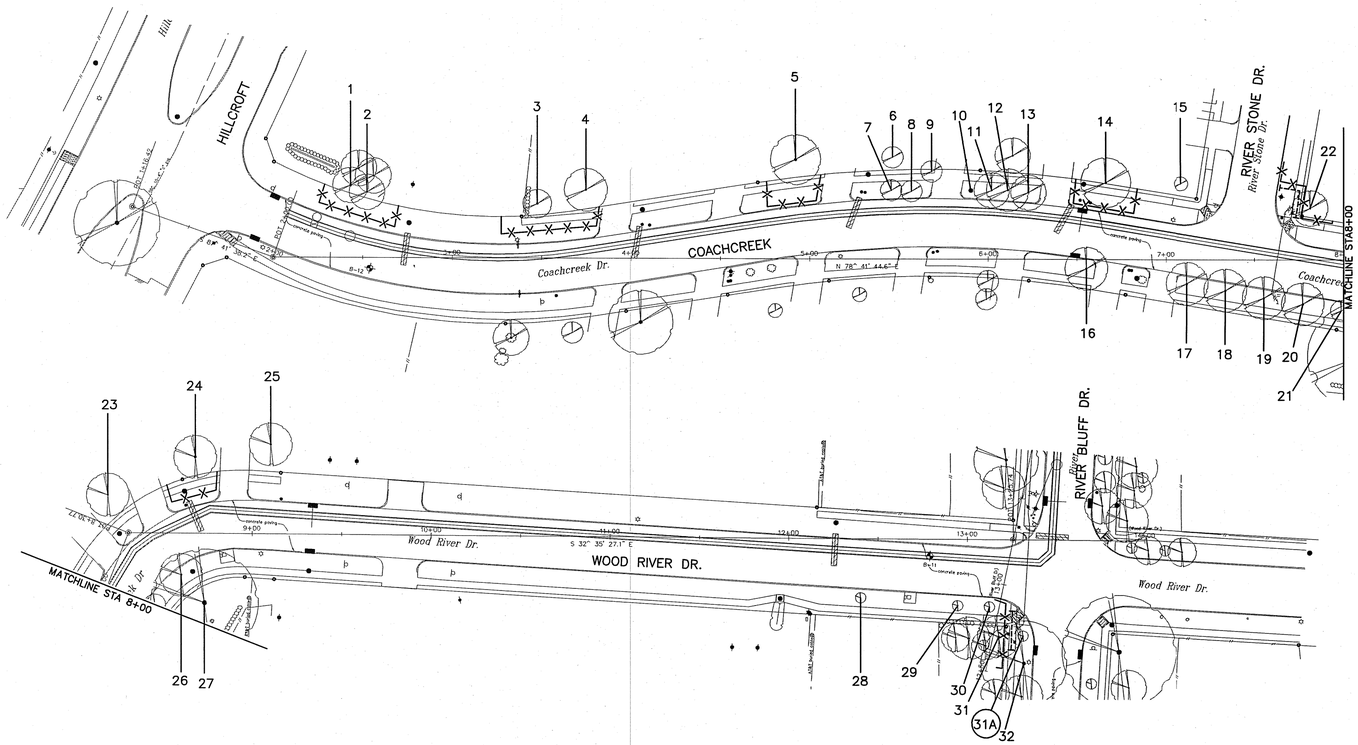

NOTE:
THIS TREE PROTECTION PLAN WAS DEVELOPED WITH INFORMATION PROVIDED BY DESIGN ENGINEER IN DRAWINGS DATED AUGUST 2010. THE PLAN CONSIDERS ALL FITTINGS, VERTICAL OFFSETS AND AREAS OF NECESSARY EXCAVATION. CHANGES MADE TO DESIGN MY COMPROMISE THE TREE PROTECTION PLAN. REFER SPECIFICATIONS 01562 AND 02915. CONDITION OF EACH TREE IS BASED ON VISUAL EVALUATION AT TIME OF DESIGN. CONDITION AND STRUCTURAL INTEGRITY OF EACH TREE IS NOT GUARANTEED BY DESIGNER AT ANY POINT IN THE FUTURE, AS ENVIRONMENTAL AND MAINTENANCE INFLUENCES ON EACH TREE CAN NOT BE DETERMINED BY DESIGNER.

0 20 40 80

TREE PRESERVATION PLAN LEGEND

- 1 — TREE NUMBER/LOCATION
- (1) — TREES TO BE REMOVED
- —X—X— TREE PROTECTION FENCE
- ROOT PRUNING TRENCH

Tree No.	Address	Description	Comments	Treatment	Required Mitigation
Trees on Coachcreek Drive					
1	7034 Coachcreek	10" Sweetgum	Private tree, protect to avoid liability	Fence	
2	7034 Coachcreek	10" Sweetgum	Private tree, protect to avoid liability	Fence	
3	7034 Coachcreek	9" Sweetgum	Private tree, protect to avoid liability	Fence	
4	7034 Coachcreek	12" Pine	Private tree, protect to avoid liability	Fence	
5	7026 Coachcreek	12" Live Oak	Private tree, protect to avoid liability	Fence, Clearance prune	
6	7022 Coachcreek	10" Crepe Myrtle	Private tree, will not be impacted		
7	7022 Coachcreek	5" Crepe Myrtle	Not ordinance tree		
8	7022 Coachcreek	5" Crepe Myrtle	Not ordinance tree		
9	7022 Coachcreek	3" Crepe Myrtle	Private tree, will not be impacted		
10	7018 Coachcreek	4" Crepe Myrtle	Not ordinance tree		
11	7018 Coachcreek	4" Arborvitae	Not ordinance tree		
12	7018 Coachcreek	4" Crepe Myrtle	Not ordinance tree		
13	7018 Coachcreek	4" Arborvitae	Not ordinance tree		
14	7014 Coachcreek	14" Pine	Ordinance tree	Fence, Clearance prune	
15	7014 Coachcreek	3" Magnolia	Private tree, will not be impacted		
16	7015 Coachcreek	10" Crepe Myrtle	Not ordinance tree	Clearance prune	
17	7007 Coachcreek	13" Bradford Pear	Not ordinance tree	Clearance prune	
18	7007 Coachcreek	11" Bradford Pear	Not ordinance tree	Clearance prune	
19	7007 Coachcreek	12" Bradford Pear	Not ordinance tree	Clearance prune	
20	7007 Coachcreek	11" Bradford Pear	Not ordinance tree	Clearance prune	
21	7007 Coachcreek	6" Bradford Pear	Not ordinance tree	Clearance prune	
22	7006 Coachcreek	9" Water Oak	Chlorotic, Private tree, protect to avoid liability	Root prune for wet connection, Fence	
23	7002 Coachcreek	10" Silver Maple	Private tree, will not be impacted		
Trees on Wood River Drive					
24	13503 Wood River	11" Live Oak	Private tree, protect to avoid liability	Fence, Clearance prune	
25	13503 Wood River	7" Crepe Myrtle	Private tree, will not be impacted		
26	7007 Coachcreek	10" Bradford Pear	Not ordinance tree	Clearance prune	
27	13503 Wood River	15" Palm	Private tree, will not be impacted		
28	Not available	3" Crepe Myrtle	Not ordinance tree		
29	Not available	1" Sago Palm	Not ordinance tree		
30	Not available	1" Sago Palm	Not ordinance tree		
31	Not available	10" Live Oak	Private tree, protect to avoid liability	Root prune for wet connection, Fence, Clearance prune	
31A	Not available	2" Crepe Myrtle	Not ordinance tree, remove for wet connection	Remove tree, no replacement required	0
32	Not available	15' Palm	Not ordinance tree		

No.	Date	Revisions	App.

SWTP
Surface Water Transmission Program

Lockwood, Andrews & Newnam, Inc.
A LEO A DALY COMPANY
2925 Briarpark Drive Houston, TX 77042

SURVEYED BY:
KUO & ASSOCIATES, INC.
C.O.H. Field Book P–

C.N. Koehl Urban Forestry, Inc.
3237 Canvasback Street • Katy, Texas 77493
281-391-0022 cknoehl@houstonurbanforestry.com

Approved 12/13/2010

CITY OF HOUSTON
DEPARTMENT OF PUBLIC WORKS AND ENGINEERING

SWTP CONTRACT 74A–1

TREE PROTECTION PLAN
SHEET 1 OF 5

WBS NO.
S–000900–0109–4

DRAWING SCALE
1"=40'

CITY OF HOUSTON PM
ARTHUR C. MORRIS, P.E.

SHEET NO. 87 OF 91

PUBLIC WORKS AND ENGINEERING
ACCEPTED AND FILED
48326
CITY DRAWING NUMBER
HOUSTON, TEXAS

$DATE$ $TIME$ $USERNAME$ $FILE$

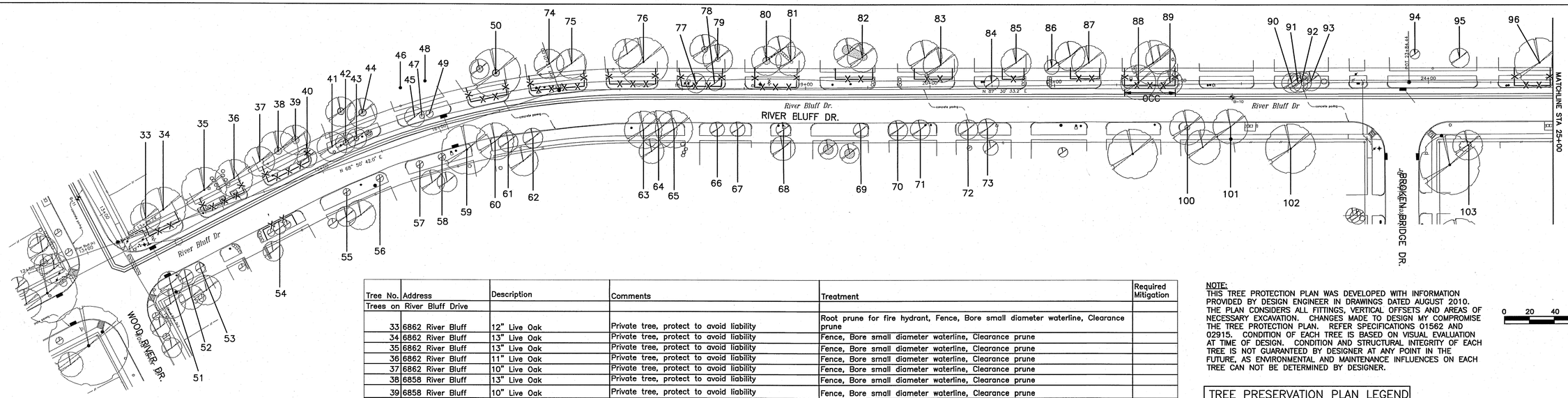

Tree No.	Address	Description	Comments	Treatment	Required Mitigation
Trees on River Bluff Drive					
33	6862 River Bluff	12" Live Oak	Private tree, protect to avoid liability	Root prune for fire hydrant, Fence, Bore small diameter waterline, Clearance prune	
34	6862 River Bluff	13" Live Oak	Private tree, protect to avoid liability	Fence, Bore small diameter waterline, Clearance prune	
35	6862 River Bluff	13" Live Oak	Private tree, protect to avoid liability	Fence, Bore small diameter waterline, Clearance prune	
36	6862 River Bluff	11" Live Oak	Private tree, protect to avoid liability	Fence, Bore small diameter waterline, Clearance prune	
37	6862 River Bluff	10" Live Oak	Private tree, protect to avoid liability	Fence, Bore small diameter waterline, Clearance prune	
38	6858 River Bluff	13" Live Oak	Private tree, protect to avoid liability	Fence, Bore small diameter waterline, Clearance prune	
39	6858 River Bluff	10" Live Oak	Private tree, protect to avoid liability	Fence, Bore small diameter waterline, Clearance prune	
40	6858 River Bluff	4" Sago Palm	Not ordinance tree		
41	6858 River Bluff	4" Sago Palm	Not ordinance tree		
42	6854 River Bluff	6" Crepe Myrtle	Topped to 4', not ordinance tree		
43	6854 River Bluff	6" Crepe Myrtle	Topped to 4', not ordinance tree		
44	6854 River Bluff	10" Live Oak	Private tree, will not be impacted		
45	6850 River Bluff	3" Crepe Myrtle	Topped to 4', not ordinance tree		
46	6850 River Bluff	12" Live Oak	Private tree, will not be impacted		
47	6850 River Bluff	3" Sago Palm	Not ordinance tree		
48	6850 River Bluff	10" Live Oak	Private tree, will not be impacted		
49	6850 River Bluff	3" Crepe Myrtle	Topped to 4', not ordinance tree		
50	6846 River Bluff	12" Live Oak	Private tree, protect to avoid liability	Fence, Bore small diameter waterline, Clearance prune	
51	6867 River Bluff	9" Crepe Myrtle	Not ordinance tree		
52	6867 River Bluff	9" Crepe Myrtle	Not ordinance tree		
53	6867 River Bluff	2" Juniper	Not ordinance tree		
54	6863 River Bluff	5" Magnolia	Ordinance tree	Fence	
55	6859 River Bluff	5" Crepe Myrtle	Not ordinance tree	Clearance prune	
56	6851 River Bluff	4" Crepe Myrtle	Not ordinance tree	Clearance prune	
57	6851 River Bluff	5" Crepe Myrtle	Not ordinance tree		
58	6851 River Bluff	5" Crepe Myrtle	Not ordinance tree		
59	6847 River Bluff	5" Arborvitae	Not ordinance tree		
60	6847 River Bluff	5" Arborvitae	Not ordinance tree		
61	6847 River Bluff	6" Crepe Myrtle	Not ordinance tree		
62	6847 River Bluff	6" Crepe Myrtle	Not ordinance tree		
63	6835 River Bluff	4" Arborvitae	Not ordinance tree		
64	6835 River Bluff	4" Arborvitae	Not ordinance tree		
65	6835 River Bluff	4" Arborvitae	Not ordinance tree		
66	6831 River Bluff	4" Crepe Myrtle	Not ordinance tree		
67	6831 River Bluff	4" Crepe Myrtle	Not ordinance tree		
68	6827 River Bluff	4" Crepe Myrtle	Not ordinance tree		
69	6823 River Bluff	5" Crepe Myrtle	Not ordinance tree		
70	6823 River Bluff	5" Crepe Myrtle	Not ordinance tree		
71	6823 River Bluff	5" Crepe Myrtle	Not ordinance tree		
72	6819 River Bluff	5" Crepe Myrtle	Not ordinance tree		
73	6819 River Bluff	5" Crepe Myrtle	Not ordinance tree		
74	6842 River Bluff	10" Live Oak	Private tree, protect to avoid liability	Fence, Bore small diameter waterline	
75	6842 River Bluff	11" Live Oak	Private tree, protect to avoid liability	Fence, Bore small diameter waterline	
76	6838 River Bluff	14" Live Oak	Private tree, protect to avoid liability	Fence, Bore small diameter waterline, Clearance prune	
77	6834 River Bluff	4" Crepe Myrtle	Not ordinance tree		
78	6834 River Bluff	4" Crepe Myrtle	Not ordinance tree		
79	6834 River Bluff	13" Live Oak	Private tree, protect to avoid liability	Fence, Bore small diameter waterline, Clearance prune	
80	6830 River Bluff	3' Sago Palm	Private tree, will not be impacted		
81	6830 River Bluff	11" Live Oak	Private tree, protect to avoid liability	Fence, Bore small diameter waterline	
82	6826 River Bluff	10" Live Oak	Private tree, protect to avoid liability	Fence, Bore small diameter waterline	
83	6822 River Bluff	11" Live Oak	Private tree, protect to avoid liability	Fence, Bore small diameter waterline, Clearance prune	
84	6818 River Bluff	3" Crepe Myrtle	Not ordinance tree		
85	6818 River Bluff	10" Live Oak	Private tree, protect to avoid liability	Fence, Bore small diameter waterline, Clearance prune	
86	6818 River Bluff	3" Crepe Myrtle	Private tree, will not be impacted		
87	6814 River Bluff	13" Live Oak	Private tree, protect to avoid liability	Fence, Bore small diameter waterline, Clearance prune	
88	6810 River Bluff	12" Silver Maple	Ordinance tree	Zero curb cutback, Fence, Clearance prune, Bore small diameter waterline	
89	6810 River Bluff	10" Silver Maple	Ordinance tree	Zero curb cutback, Fence, Clearance prune, Bore small diameter waterline	
90	6802 River Bluff	5" Crepe Myrtle	Not ordinance tree		
91	6802 River Bluff	4" Texas Mountain Laurel	Not ordinance tree	Clearance prune	
92	6802 River Bluff	5" Crepe Myrtle	Not ordinance tree		
93	6802 River Bluff	5" Crepe Myrtle	Not ordinance tree		
94	6730 River Bluff	6" Bradford Pear	Private tree, will not be impacted		
95	6726 River Bluff	9" Nuttal Oak	70% dieback, Private tree, will not be impacted		
96	6722 River Bluff	16" Pine	Private tree, protect to avoid liability	Fence, Bore small diameter waterline	
97	6718 River Bluff	17" Arizona Ash	Private tree, protect to avoid liability	Clearance prune	
98	6718 River Bluff	12' Palm	Not ordinance tree		
99	6714 River Bluff	13" Pine	Private tree, protect to avoid liability	Fence, Bore small diameter waterline, Clearance prune	
100	6807 River Bluff	13" Bradford Pear	Not ordinance tree	Clearance prune	
101	6807 River Bluff	13" Bradford Pear	Not ordinance tree	Clearance prune	
102	13602 Broken Bridge	15" Crepe Myrtle	Private tree, will not be impacted		
103	13603 Broken Bridge	12" Pine	Chlorotic, Private tree, will not be impacted		

NOTE:
THIS TREE PROTECTION PLAN WAS DEVELOPED WITH INFORMATION PROVIDED BY DESIGN ENGINEER IN DRAWINGS DATED AUGUST 2010. THE PLAN CONSIDERS ALL FITTINGS, VERTICAL OFFSETS AND AREAS OF NECESSARY EXCAVATION. CHANGES MADE TO DESIGN MY COMPROMISE THE TREE PROTECTION PLAN. REFER SPECIFICATIONS 01562 AND 02915. CONDITION OF EACH TREE IS BASED ON VISUAL EVALUATION AT TIME OF DESIGN. CONDITION AND STRUCTURAL INTEGRITY OF EACH TREE IS NOT GUARANTEED BY DESIGNER AT ANY POINT IN THE FUTURE, AS ENVIRONMENTAL AND MAINTENANCE INFLUENCES ON EACH TREE CAN NOT BE DETERMINED BY DESIGNER.

0 20 40 80

TREE PRESERVATION PLAN LEGEND

- 1 — TREE NUMBER/LOCATION
- (1) — TREES TO BE REMOVED
- -X-X- — TREE PROTECTION FENCE
- ROOT PRUNING TRENCH
- OCC — ZERO CURB CUTBACK

No.	Date	Revisions	App.

SWTP
Surface Water Transmission Program

LAN
Lockwood, Andrews & Newnam, Inc.
A LEO A DALY COMPANY
2925 Briarpark Drive Houston, TX 77042

SURVEYED BY:
KUO & ASSOCIATES, INC.
C.O.H. Field Book P-

C.N. Koehl
Urban Forestry, Inc.
3237 Canvasback Street • Katy, Texas 77493
281-391-0022 ckoehl@centurytelforestry.com
Approved Craig N. Koehl 12/13/2010

CITY OF HOUSTON
DEPARTMENT OF PUBLIC WORKS AND ENGINEERING

SWTP CONTRACT 74A-1

TREE PROTECTION PLAN
SHEET 2 OF 5

WBS NO.	S-000900-0109-4
DRAWING SCALE	1"=40'
CITY OF HOUSTON PM	ARTHUR C. MORRIS, P.E.
SHEET NO.	88 OF 91

PUBLIC WORKS AND ENGINEERING
ACCEPTED AND FILED
48326
CITY DRAWING NUMBER
HOUSTON, TEXAS

$USERNAME$
$TIME$
$DATE$
$FILE$

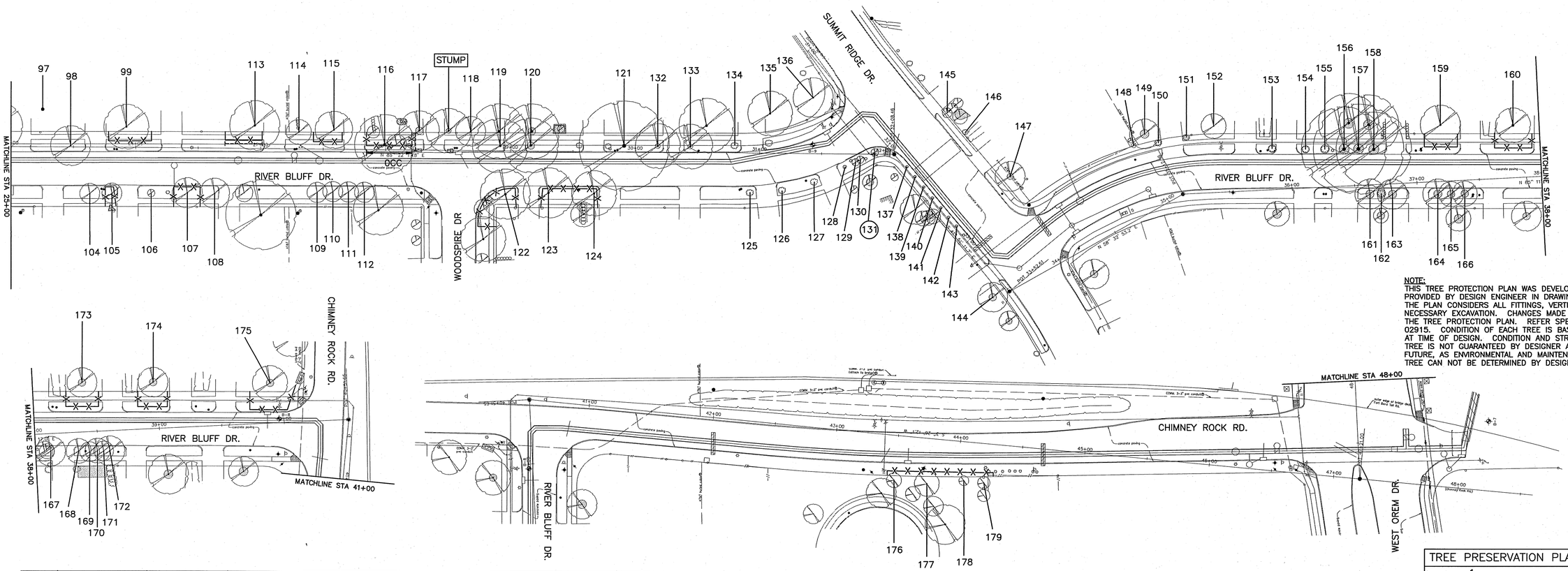

NOTE:
THIS TREE PROTECTION PLAN WAS DEVELOPED WITH INFORMATION PROVIDED BY DESIGN ENGINEER IN DRAWINGS DATED AUGUST 2010. THE PLAN CONSIDERS ALL FITTINGS, VERTICAL OFFSETS AND AREAS OF NECESSARY EXCAVATION. CHANGES MADE TO DESIGN MY COMPROMISE THE TREE PROTECTION PLAN. REFER SPECIFICATIONS 01562 AND 02915. CONDITION OF EACH TREE IS BASED ON VISUAL EVALUATION AT TIME OF DESIGN. CONDITION AND STRUCTURAL INTEGRITY OF EACH TREE IS NOT GUARANTEED BY DESIGNER AT ANY POINT IN THE FUTURE, AS ENVIRONMENTAL AND MAINTENANCE INFLUENCES ON EACH TREE CAN NOT BE DETERMINED BY DESIGNER.

Tree No.	Address	Description	Comments	Treatment	Required Mitigation
Trees on River Bluff Drive					
97	6718 River Bluff	17" Arizona Ash	Private tree, protect to avoid liability	Clearance prune	
98	6718 River Bluff	12' Palm	Not ordinance tree		
99	6714 River Bluff	13" Pine	Private tree, protect to avoid liability	Fence, Clearance prune	
100	6807 River Bluff	13" Bradford Pear	Not ordinance tree	Clearance prune	
101	6807 River Bluff	13" Bradford Pear	Not ordinance tree	Clearance prune	
102	13602 Broken Bridge	15" Crepe Myrtle	Private tree, will not be impacted		
103	13603 Broken Bridge	12" Pine	Chlorotic, Private tree, will not be impacted		
104	6719 River Bluff	6" Crepe Myrtle	Not ordinance tree		
105	6715 River Bluff	8" Magnolia	Ordinance tree	Fence, Clearance prune	
106	6715 River Bluff	3" Juniper	Not ordinance tree		
107	6715 River Bluff	11" Magnolia	Ordinance tree	Fence, Clearance prune	
108	6711 River Bluff	3" Sago Palm	Not ordinance tree		
109	13602 Woodspire	4" Crepe Myrtle	Not ordinance tree		
110	13602 Woodspire	4" Crepe Myrtle	Not ordinance tree		
111	13602 Woodspire	4" Crepe Myrtle	Not ordinance tree		
112	13602 Woodspire	4" Crepe Myrtle	Not ordinance tree		
113	6710 River Bluff	23" Arizona Ash	Private tree, protect to avoid liability	Root prune for street replacement, Fence, Bore small diameter waterline, Clearance prune	
114	6706 River Bluff	5" Arborvitae	Private tree, will not be impacted		
115	6706 River Bluff	11" Pine	Chlorotic, Private tree, protect to avoid liability	Fence, Bore small diameter waterline	
116	6702 River Bluff	20" Arizona Ash	Ordinance tree	20% dieback, Zero curb cutback, Fence, Bore small diameter waterline, Clearance prune	
117	6702 River Bluff	2" Arborvitae	Private tree, will not be impacted		
118	6622 River Bluff	4" Crepe Myrtle	Not ordinance tree		
119	6622 River Bluff	30' Palm	Not ordinance tree		
120	6622 River Bluff	30' Palm	Not ordinance tree		
121	6614 River Bluff	19" Arizona Ash	3' tall stump with sprouts, Not ordinance tree	Clearance prune	
122	6619 River Bluff	16" Live Oak	Ordinance tree	Fence, Clearance prune	
123	6619 River Bluff	16" Live Oak	Ordinance tree	Fence, Clearance prune	
124	6615 River Bluff	13" Shumard Oak	Ordinance tree	Fence, Clearance prune	
125	6607 River Bluff	2" Boxwood	Not ordinance tree		
126	6607 River Bluff	2" Boxwood	Not ordinance tree		
127	6607 River Bluff	2' Sago Palm	Not ordinance tree		
128	6603 River Bluff	1' Sago Palm	Not ordinance tree		
129	6603 River Bluff	1" Rose of Sharon	Not ordinance tree		
130	6603 River Bluff	1" Rose of Sharon	Not ordinance tree		
131	6603 River Bluff	1' tall Water Oak	Not ordinance tree, remove for wet connection	Remove tree, no replacement required	0
132	6614 River Bluff	10" Arborvitae	Not ordinance tree	Clearance prune	
133	6614 River Bluff	10" Arborvitae	Not ordinance tree	Clearance prune	
134	6610 River Bluff	2' Sago Palm	Not ordinance tree		
135	6610 River Bluff	12" Live Oak	Private tree, will not be impacted		
136	6610 River Bluff	10" Arizona Ash	Multi trunk stump sprouts, Private, will not be impacted		

Tree No.	Address	Description	Comments	Treatment	Required Mitigation
Trees on Summit Ridge Drive					
137	6613 River Bluff	1" Crepe Myrtle	Not ordinance tree		
138	6613 River Bluff	1" Crepe Myrtle	Not ordinance tree		
139	6613 River Bluff	1" Crepe Myrtle	Not ordinance tree		
140	6613 River Bluff	1" Crepe Myrtle	Not ordinance tree		
141	6613 River Bluff	1" Crepe Myrtle	Not ordinance tree		
142	6613 River Bluff	1" Crepe Myrtle	Not ordinance tree		
143	6613 River Bluff	1" Crepe Myrtle	Not ordinance tree		
144	Not available	12" Live Oak	Private tree, will not be impacted		
145	13535 Summit Ridge	3" Italian Cypress	Not ordinance tree		
146	13535 Summit Ridge	2' Sago Palm	Not ordinance tree		
147	13535 Summit Ridge	9" Sweetgum	Private tree, will not be impacted		
Trees on River Bluff Drive					
148	6534 River Bluff	2" Italian Cypress	Private tree, will not be impacted		
149	6534 River Bluff	9" Bradford Pear	Private tree, will not be impacted		
150	6534 River Bluff	3' Sago Palm	Not ordinance tree		
151	6534 River Bluff	3' Sago Palm	Not ordinance tree		
152	6530 River Bluff	4" Juniper	Private tree, will not be impacted		
153	6526 River Bluff	3' Sago Palm	Not ordinance tree		
154	6526 River Bluff	3' Sago Palm	Not ordinance tree		
155	6526 River Bluff	3' Sago Palm	Not ordinance tree		
156	6522 River Bluff	10' Palm	Not ordinance tree	Clearance prune	
157	6522 River Bluff	10' Palm	Not ordinance tree	Clearance prune	
158	6522 River Bluff	10' Palm	Not ordinance tree	Clearance prune	
159	6518 River Bluff	12" Lacebark Elm	Private tree, protect to avoid liability	Fence, Bore small diameter waterline, Clearance prune	
160	6514 River Bluff	10" Live Oak	Private tree, protect to avoid liability	Fence, Bore small diameter waterline, Clearance prune	
161	6523 River Bluff	5" Crepe Myrtle	Not ordinance tree		
162	6523 River Bluff	3" Juniper	Not ordinance tree		
163	6523 River Bluff	5" Crepe Myrtle	Not ordinance tree		
164	6519 River Bluff	5" Crepe Myrtle	Not ordinance tree		
165	6519 River Bluff	5" Crepe Myrtle	Not ordinance tree		
166	6519 River Bluff	5" Crepe Myrtle	Not ordinance tree		
167	6511 River Bluff	7" Crepe Myrtle	Not ordinance tree		
168	6511 River Bluff	6" Crepe Myrtle	Not ordinance tree		
169	6511 River Bluff	6" Crepe Myrtle	Not ordinance tree		
170	6511 River Bluff	6" Crepe Myrtle	Not ordinance tree		
171	6511 River Bluff	6" Crepe Myrtle	Not ordinance tree		
172	6511 River Bluff	6" Crepe Myrtle	Not ordinance tree		
173	6510 River Bluff	11" Bur Oak	Private tree, protect to avoid liability	Fence, Bore small diameter waterline, Clearance prune	
174	6506 River Bluff	10" Live Oak	Private tree, protect to avoid liability	Fence, Bore small diameter waterline	
175	6502 River Bluff	11" Live Oak	Private tree, protect to avoid liability	Fence, Bore small diameter waterline	
Trees on Chimney Rock Road					
176	6503 Summit Ridge Ct	5" Live Oak	Private tree, protect to avoid liability	Fence	
177	6503 Summit Ridge Ct	6" Live Oak	Private tree, protect to avoid liability	Fence	
178	6503 Summit Ridge Ct	4" Pine	Chlorotic, Private tree, protect to avoid liability	Fence	
179	6503 Summit Ridge Ct	1" Orchid Tree	Private tree, protect to avoid liability	Fence	

TREE PRESERVATION PLAN LEGEND

- 1 — TREE NUMBER/LOCATION
- (1) — TREES TO BE REMOVED
- -X-X- — TREE PROTECTION FENCE
- ------ — ROOT PRUNING TRENCH
- OCC — ZERO CURB CUTBACK

0 20 40 80

SWTP
Surface Water Transmission Program

No.	Date	Revisions	App.

Lockwood, Andrews & Newnam, Inc.
A LEO A DALY COMPANY
2925 Briarpark Drive Houston, TX 77042

SURVEYED BY:
KUO & ASSOCIATES, INC.
C.O.H. Field Book P–

C.N. Koehl Urban Forestry, Inc.
3237 Canvasback Street • Katy, Texas 77493
281-391-0022 ckoehl@koehlurbanforestry.com
Approved Craig N. Koehl 12/13/2010

CITY OF HOUSTON
DEPARTMENT OF PUBLIC WORKS AND ENGINEERING

SWTP CONTRACT 74A–1

TREE PROTECTION PLAN
SHEET 3 OF 5

WBS NO.
S–000900–0109–4

DRAWING SCALE
1"=40'

CITY OF HOUSTON PM
ARTHUR C. MORRIS, P.E.

SHEET NO. 89 OF 91

PUBLIC WORKS AND ENGINEERING
ACCEPTED AND FILED
48326
CITY DRAWING NUMBER
CITY SECRETARY, HOUSTON, TEXAS

$FILE$ $USERNAME$ $TIME$ $DATE$

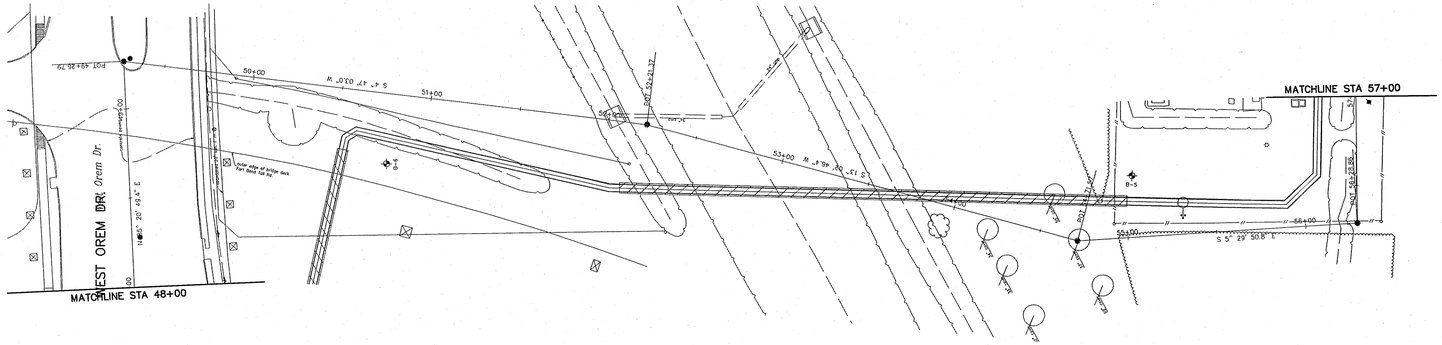

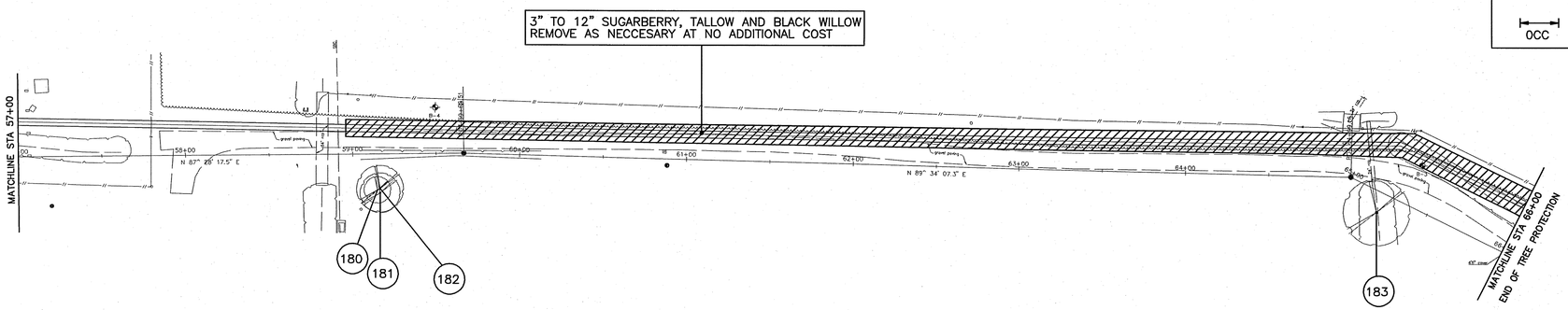

Tree No.	Address	Description	Comments	Treatment	Required Mitigation
Trees in Undeveloped Right of Way					
180	Not available	9" Tallow	Not ordinance tree	Remove in clearing and grubbing	
181	Not available	12" Tallow	Not ordinance tree	Remove in clearing and grubbing	
182	Not available	13" Sugarberry	Not ordinance tree	Remove in clearing and grubbing	
183	Not available	17" Tallow	Not ordinance tree	Remove in clearing and grubbing	

NOTE:
THIS TREE PROTECTION PLAN WAS DEVELOPED WITH INFORMATION PROVIDED BY DESIGN ENGINEER IN DRAWINGS DATED AUGUST 2010. THE PLAN CONSIDERS ALL FITTINGS, VERTICAL OFFSETS AND AREAS OF NECESSARY EXCAVATION. CHANGES MADE TO DESIGN MY COMPROMISE THE TREE PROTECTION PLAN. REFER SPECIFICATIONS 01562 AND 02915. CONDITION OF EACH TREE IS BASED ON VISUAL EVALUATION AT TIME OF DESIGN. CONDITION AND STRUCTURAL INTEGRITY OF EACH TREE IS NOT GUARANTEED BY DESIGNER AT ANY POINT IN THE FUTURE, AS ENVIRONMENTAL AND MAINTENANCE INFLUENCES ON EACH TREE CAN NOT BE DETERMINED BY DESIGNER.

0 20 40 80

TREE PRESERVATION PLAN LEGEND

- 1 — TREE NUMBER/LOCATION
- (1) — TREES TO BE REMOVED
- —X—X— TREE PROTECTION FENCE
- ----- ROOT PRUNING TRENCH
- OCC — ZERO CURB CUTBACK

No.	Date	Revisions	Appr.

SWTP
Surface Water Transmission Program

Lockwood, Andrews & Newnam, Inc.
A LEO A DALY COMPANY
2925 Briarpark Drive Houston, TX 77042

SURVEYED BY:
KUO & ASSOCIATES, INC.
C.O.H. Field Book P-

C.N. Koehl
Urban Forestry, Inc.
3237 Canvasback Street • Katy, Texas 77493
281-391-0022 ckoehl@koehlurbanforestry.com
Approved Craig N. Koehl 12/13/2010

CITY OF HOUSTON
DEPARTMENT OF PUBLIC WORKS AND ENGINEERING

SWTP CONTRACT 74A-1

TREE PROTECTION PLAN
SHEET 4 OF 5

WBS NO.
S-000900-0109-4

DRAWING SCALE
1"=40'

CITY OF HOUSTON PM
ARTHUR C. MORRIS, P.E.

SHEET NO. 90 OF 91

ACCEPTED AND FILED
48326
CITY DRAWING NO.
HOUSTON, TEXAS

$USERNAME$
$TIME$
$DATE$
$FILE$

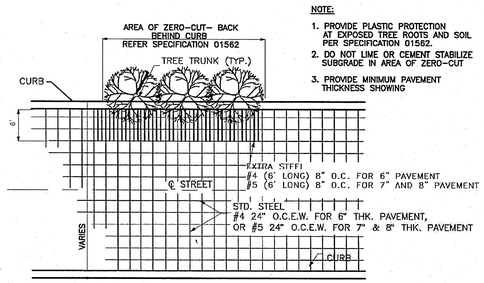

NOTE:

1. PROVIDE PLASTIC PROTECTION AT EXPOSED TREE ROOTS AND SOIL PER SPECIFICATION 01562.
2. DO NOT LIME OR CEMENT STABILIZE SUBGRADE IN AREA OF ZERO-CUT
3. PROVIDE MINIMUM PAVEMENT THICKNESS SHOWING

STABILIZED ROAD BASE

ZERO CURB CUTBACK DETAIL
EXTRA STEEL BEHIND CURB
NOT TO SCALE

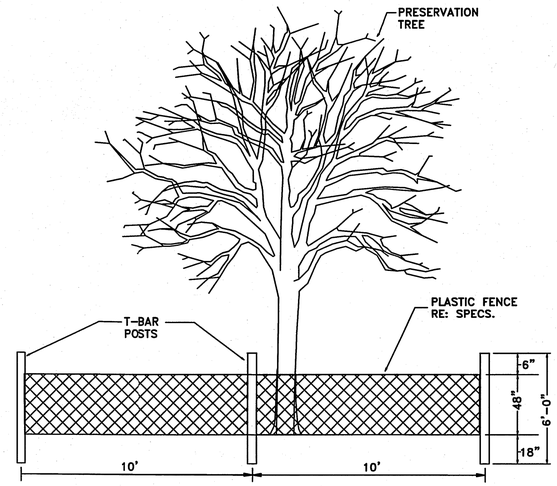

TREE PROTECTION FENCING DETAIL A
NOT TO SCALE

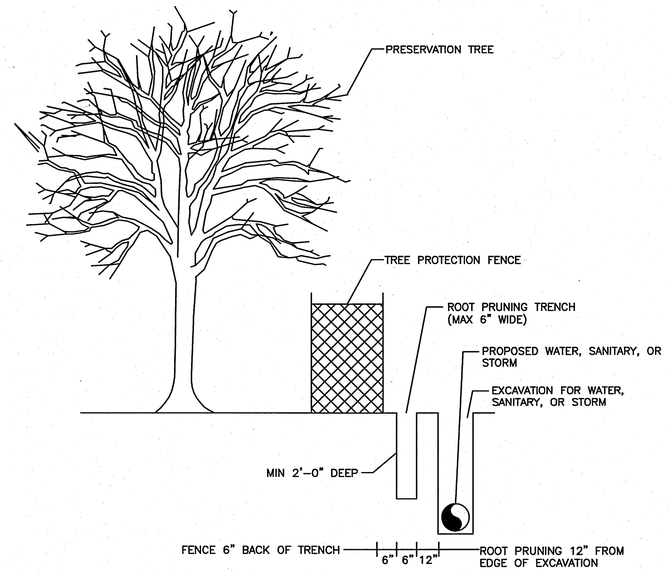

ROOT PRUNE FOR WATER, SANITARY, OR STORM LINE
NOT TO SCALE

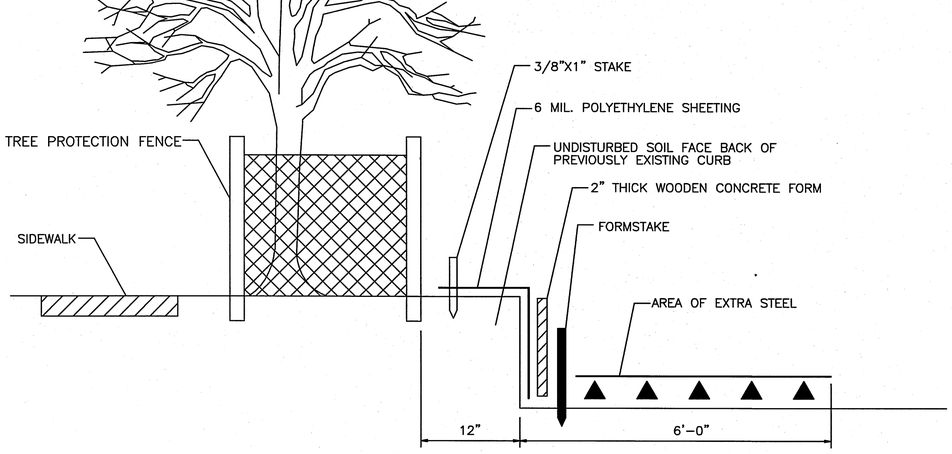

NOTES:

1. ROOTS AND SOIL BACK OF CURB SHALL NOT BE DISTURBED IN DEMOLITION, ROAD BASE PREPARATION, FORMING, OR FINISHING.
2. CURB TO BE HAND FINISHED, ACCESS FOR SLIP CURB MACHINE WILL NOT BE PERMITTED.
3. NO STABLIZIATION BACK OF CURB IN AREA OF ZERO CURB CUTBACK.

ZERO CURB CUTBACK DETAIL-PROFILE VIEW
NOT TO SCALE

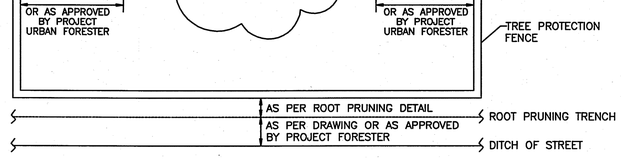

TREE PROTECTION FENCING DETAIL B
NOT TO SCALE

No.	Date	Revisions	App.

SWTP
Surface Water Transmission Program

Lockwood, Andrews & Newnam, Inc.
A LEO A DALY COMPANY
2925 Briarpark Drive Houston, TX 77042

SURVEYED BY:
KUO & ASSOCIATES, INC.
C.O.H. Field Book P-

C.N. Koehl
Urban Forestry, Inc.
3237 Canvasback Street • Katy, Texas 77493
281-391-0022 ckoehl@koehlurbanforestry.com
Approved 12/13/2010

CITY OF HOUSTON
DEPARTMENT OF PUBLIC WORKS AND ENGINEERING

SWTP CONTRACT 74A-1

TREE PROTECTION PLAN
SHEET 5 OF 5

WBS NO.
S-000900-0109-4

DRAWING SCALE
1"=40'

CITY OF HOUSTON PM
ARTHUR C. MORRIS, P.E.

SHEET NO. 91 OF 91

PUBLIC WORKS AND ENGINEERING
ACCEPTED AND FILED
48326
CITY OF HOUSTON, TEXAS
HOUSTON, TEXAS

ENGINEERS
SEAL
SURVEYORS

1. PAVING

I. DESIGN THICKNESS OF PAVING _____
II. STABILIZED SUBGRADE TO A DEPTH OF _____
III. DESIGN STRENGTH OF CONCRETE _____ psi
IV. TYPE AND PLACEMENT OF STEEL: _____

DRIVEWAYS

I. NUMBER OF DRIVEWAY APPROACHES PROPOSED: _____
II. HARRIS COUNTY STANDARD DRIVEWAY DETAIL APPEARS ON SHEET _____

FIRE APPARATUS ACCESS ROAD

☐ REQUIRED AND SHOWN ON SHEET(S) _____
☐ NOT REQUIRED DUE TO _____

CURBING

I. ISLANDS AND MEDIANS REQUIRE STANDARD 6" CURBING
II. ☐ STANDARD 6" CURBING PROPOSED
☐ 4" x 12" CURBING PROPOSED EXCEPT AT MEDIANS AND ISLANDS

TRAFFIC CONSIDERATIONS

I. MEDIAN CUTS
☐ NO MEDIAN CUT OR RELOCATION IS PROPOSED
☐ MEDIAN MODIFICATIONS ARE SHOWN ON SHEET _____

II. LEFT / RIGHT TURN LANE
☐ NO LEFT / RIGHT TURN LANE IS PROPOSED
☐ LEFT / RIGHT TURN LANE IS SHOWN ON SHEET _____

III. TRAFFIC CONTROL PLAN
☐ NO WORK IN THE RIGHT OF WAY IS PROPOSED THAT WOULD INTERFERE WITH TRAFFIC FLOW
☐ TRAFFIC CONTROL SHOWN ON SHEET _____

IV. TRAFFIC SIGNAL
☐ NO TRAFFIC SIGNAL IS EXISTING / PROPOSED
☐ EXISTING TRAFFIC SIGNAL DEVICES (T.C. BOXES AND LOOPS) SHOWN ON SHEET _____
☐ PROPOSED TRAFFIC SIGNAL (BY OTHERS)

V. TRAFFIC IMPACT ANALYSIS
☐ NO TRAFFIC IMPACT ANALYSIS IS REQUIRED
☐ TRAFFIC IMPACT ANALYSIS HAS BEEN APPROVED ON DATE: _____

2. RESIDENTIAL / SUBDIVISION DRAINAGE

I. DRAINAGE SYSTEM TYPE
☐ STORM SEWER
☐ ROADSIDE DITCH

II. DESIGN METHOD USED
☐ CITY OF HOUSTON _____ FREQUENCY
☐ OTHER _____

III. DRAINAGE SYSTEM OUTFALL
☐ TO DETENTION POND
☐ DETENTION POND MAINTAINED BY _____
☐ TO HCFCD DRAINAGE DITCH UNIT NO. _____
☐ TO HARRIS COUNTY ROADSIDE DITCH
ROAD NAME: _____
☐ STATIC W.S.E. @ OUTFALL IS _____.
☐ PROPOSED STORM SEWER IS SUBMERGED.

IV STORM SEWER OUTFALL
CAPACITY ALLOCATED TO TRACT FROM D. A. MAP: _____ (CFS)
FROM DRAINAGE AREA MAP DATED: _____
PREPARED BY: _____
ACTUAL OUTFALL RATE: _____ (CFS)

V. DRAINAGE SYSTEM FLOW RATE
FLOW PRIOR TO DETENTION: _____ CFS
FLOW AFTER DETENTION (IF REQUIRED): _____ CFS

3. COMMERCIAL / OTHER SITE DRAINAGE

I. PROPOSED DRAINAGE AREA
☐ NEW DEVELOPMENT AREA: _____
☒ RE-DEVELOPMENT AREA (AMOUNT INCREASED IMPERVIOUS AREA): _____

II. DETENTION VOLUME
NEW AREA _____ X * = _____ ACRE FEET DETENTION REQUIRED
* ☐ .55
* ☐ .65
* ☐ .75
* ☐ OTHER: _____
PROPOSED VOLUME = _____ ACRE FEET

III. OUTFALL
OUTFALL TO ☐ H.C. ROADSIDE DITCH
☐ EXISTING H.C. STORM SEWER
☐ OTHER _____
ROADSIDE DITCH OUTFALL:
ALLOWABLE OUTFALL RATE = _____ (CFS)
PROPOSED OUTFALL RATE: _____
☐ STORM SEWER OUTFALL
CAPACITY ALLOCATED TO TRACT FROM D. A. MAP: _____ (CFS)
FROM DRAINAGE AREA MAP DATED: _____
PREPARED BY: _____
ACTUAL OUTFALL RATE: _____ (CFS)

IV. PUMPED DETENTION FACILITIES
VOLUME THAT GRAVITY FLOWS: _____ ACRE FEET
VOLUME THAT IS PUMPED: _____ ACRE FEET
ENTRANCE VELOCITY INTO ROADSIDE DITCH OR STORM SEWER: _____
PUMP SPECIFICATIONS AND OPERATING PLAN APPEAR ON SHEET _____

V. FLOW RESTRICTOR SIZE
OUTFALL PIPE SIZE: _____
RESTRICTOR PIPE SIZE: _____

4. WATER AND WASTEWATER

I. TYPE OF SERVICE PROPOSED
☐ MUNICIPALITY: _____
☐ MUNICIPAL UTILITY DISTRICT: _____
☐ OTHER DISTRICT: _____
☐ PRIVATE WATER AND WASTEWATER SYSTEMS
☐ PRIVATE WATER SYSTEM AND INDIVIDUAL OSSF
☐ INDIVIDUAL WATER WELL AND OSSF
☐ OTHER: _____

II. PROOF OF CAPACITY
☐ LETTER FROM DISTRICT AUTHORIZING SERVICE AND CONNECTION
☐ TCEQ APPROVAL FOR WATER SYSTEM AND PERMIT FOR WASTEWATER SYSTEM.
☐ OSSF SUBDIVISION PLANNING REPORT

III. AMOUNT OF FLOW
☐ RESIDENTIAL: _____ LOTS OR UNITS
☐ COMMERCIAL: _____ AVERAGE DAILY FLOW
☐ OTHER: _____

NOTES:
I. COMPLETE FOR ALL PROJECTS
II. COMPLETE FOR ALL PROJECTS.
III. COMPLETE ONLY IF TCEQ DISCHARGE PERMIT IS PROPOSED

5. DESCRIPTION OF PROPERTY

I. LEGAL DESCRIPTION
A. ACREAGE: HARRIS COUNTY FLOOD CONTROL FEE STRIP C156-00-00 AND COUNTY OF HARRIS PARCEL 9 H.C.C.F. NO.W709853 O.P.R.O.R.P
B. ☐ SUBDIVISION: _____
☐ SURVEY & ABSTRACT: HCCF NO. G130472 AND H.C.C.F. NO.W709853 O.P.R.O.R.P
C. ADJACENT ROADS: N/A

II. PLATTING
A. SUBDIVISION PLAT
☐ PROPOSED PLAT / REPLAT
☐ RECORDED PLAT / REPLAT
PLAT NAME: _____
PLAT NUMBER _____
☒ NO PLAT REQUIRED
B. STREETS PROPOSED
☐ PUBLIC
☐ PRIVATE
☐ PUBLIC & PRIVATE
☒ NONE

III. JURISDICTIONS
* ☒ CITY OF HOUSTON
☐ CITY OF _____
* ☐ ETJ, CITY OF HOUSTON
☐ ETJ, CITY OF _____
☐ NO ETJ

IV. HCAD ACCOUNT NOS. (ALL)
N/A

V. UNOBSTRUCTED VISIBILITY EASEMENT (U.V.E.)
☐ REQUIRED AND SHOWN ON SHEET(S) _____
☒ NOT REQUIRED

KEY MAP® page(s) 571 J, K & P

*CPC 101 FORM MAY BE REQUIRED

6. STORM WATER QUALITY

I. CONSTRUCTION PROTECTIVE MEASURES.
☐ SWPPP SITE PLAN AND DETAILS ON SHEET(S) N/A

II. APPLICABILITY FOR PERMANENT FEATURES.
☐ EXEMPT NEW DEVELOPMENT OF LESS THAN 5 ACRE PARCEL.
☐ EXEMPT REDEVELOPMENT OF A 5 ACRE OR LARGER PARCEL WHERE TOTAL IMPERVIOUS SURFACE (EXISTING PLUS PROPOSED) IS LESS THAN 1 ACRE.
☒ EXEMPT "GRAND FATHERED" BY AN EXISTING STORM SEWER LINE.
☐ STORM WATER QUALITY PERMIT REQUIREMENT FOR THIS PROJECT IS COVERED BY _____**.
☐ "STORM WATER QUALITY MANAGEMENT PLAN" INCLUDED. SWQMP SITE PLAN ON SHEET(S) _____

III. PERMANENT STORM WATER QUALITY FEATURES.
☐ VEGETATIVE CONTROLS USED: (FILTER STRIP, GRASSY SWALE, URBAN FORESTRY) DETAILS AND CALCULATIONS APPEAR ON SHEET(S) _____
☐ POND STRUCTURE USED (WET, DRY, WETLANDS) DETAILS AND CALCULATIONS APPEAR ON SHEET(S) _____
☐ HYDRODYNAMIC TYPE SEPERATOR MODEL: _____
☐ OTHER(S): N/A

NOTES:
I – II REQUIRED ON ALL PROJECTS, III IF NOT EXEMPT OR "GRANDFATHERED"
** INCLUDE: PROJECT TITLE, HARRIS COUNTY PROJECT NUMBER, AND SWQ PERMIT NUMBER, OR THE NAME OF THE PERMITTING AUTHORITY IF OTHER THAN HARRIS COUNTY.

7. FLOOD CONTROL DISTRICT CRITERIA

I. DETENTION SUMMARY

STORMWATER DETENTION BASIN ROUTING TABLE
DETENTION BASIN DRAINAGE AREA = _____ ACRES

RAINFALL EVENT PROBABILITY	PRE-DEVELOPED PEAK RUNOFF (CFS)	POST-DEVELOPED PEAK RUNOFF (CFS)	DETENTION BASIN PEAK OUTFLOW (CFS)	MAXIMUM WATER SURFACE ELEVATION	PEAK STORAGE VOLUME (AC-FT)	STORAGE RATE (AC-FT PER AC)
10% EXCEEDANCE (10-YEAR)						
1% EXCEEDANCE (100-YEAR)						

ADDITIONAL CRITERIA FOR PUMPED DETENTION BASINS:
VOLUME OF PUMPED 1% EXCEEDANCE STORAGE VOLUME = _____ AC-FT _____ % OF TOTAL VOLUME
MAXIMUM DESIGN OUTFLOW VELOCITY INTO HCFCD CHANNEL = _____ FT./SEC.
DRAIN TIME FOR BASIN = _____ HOURS BASED ON _____ HEAD CONDITIONS.

STORMWATER DRAINAGE DESIGN REPORT

REPORT TITLE _____
REPORT DATE _____ ENGINEERING FIRM _____
DATE OF ACKNOWLEDGEMENT BY HCFCD OR FLOODPLAIN ADMINISTRATOR _____ HCFCD PROJECT # _____

STORMWATER DETENTION FOR THE PROPOSED WORK CONTAINED IN THESE PLANS IS PROVIDED BY OTHER PLANS:
PLAN TITLE _____
ENGINEERING FIRM _____ DATE SIGNED BY HCFCD _____ HCFCD PROJECT # _____

II. HCFCD STANDARD NOTES: SEE SHEET 4 OF THESE PLANS.

III. HCFCD STANDARD DETAILS: SEE SHEET N/A OF THESE PLANS.

IV. REFER TO PLAN SHEETS 26, 28 and 30-33 FOR EXISTING AND PROPOSED RIGHT OF WAY DELINEATION AND COMPLETE RECORDING INFORMATION TO INCLUDE CLERK'S FILE NUMBERS, TYPE OF ESTATE (e.g., DRAINAGE EASEMENT, FEE STRIP, ETC.) AND GRANTEE (e.g. COH, HCFCD, PUBLIC, TXDOT, ETC.)

NOTES:
I. COMPLETE ONLY IF HCFCD OR HARRIS COUNTY IS REQUIRING DETENTION.
II. COMPLETE ONLY IF PROJECT HAS WITHIN IT OR IS IMMEDIATELY ADJACENT TO AN EXISTING OR PROPOSED HCFCD MAINTAINED CHANNEL OR DETENTION BASIN.
III. COMPLETE ONLY IF PROJECT INCLUDES NEW OUTFALL, BACKSLOPE INTERCEPTOR OR OTHER RELATED WORK WITHIN AN EXISTING OR PROPOSED HCFCD MAINTAINED CHANNEL OR DETENTION BASIN.
IV. COMPLETE ONLY OF PROJECT HAS WITHIN OR IMMEDIATELY ADJACENT TO IT AN EXISTING OR PROPOSED PUBLIC DRAINAGE CHANNEL OR DETENTION BASIN.

8. FLOOD PLAIN STATUS

I. GENERAL INFORMATION
FIRM PANEL(S) FOR PROPERTY: 48201C0865L
FIRM PANEL(S) DATE: JUNE 18, 2007
STATUS OF PROPERTY ON MAP
☐ ENTIRELY LOCATED IN UNSHADED ZONE "X"
☒ LOCATED PARTIALLY IN ~~ANY "A" ZONE OR~~ SHADED ZONE "X", DELINATE FLOODPLAIN BOUNDARY ON CONSTRUCTION DRAWINGS (DRAINAGE LAYOUT PG. NO. N/A) (BASE FLOOD LEVEL N/A)
☐ LOCATED ENTIRELY IN ANY "A" ZONE OR SHADED ZONE "X", (INDICATE BASE FLOOD LEVEL _____)
☐ LOCATED IN THE 10-YEAR FLOODPLAIN
☐ LOCATED IN CYPRESS CREEK LOMR 08-06-2369P (INDICATE BASE FLOOD LEVEL _____)
☐ SITE REMOVED FROM FLOODPLAIN BY LOMA OR LOMR-F CASE NO. _____
☐ OTHER

ELEVATION INFORMATION
BENCHMARK USED
☒ HARRIS COUNTY FLOODPLAIN REFERENCE MARK
☐ HARRIS-GALVESTON COASTAL SUBSIDENCE DISTRICT BENCHMARK (FOR COASTAL AREAS)
DESCRIPTION OF BENCHMARK INCLUDING ELEVATION, DATUM AND YEAR OF ADJUSTMENT (2001 ADJ.) C.O.H. SURVEY MARKER 5151/7715 AND FLOODPLAIN REFERENCE MARK NUMBER 030130, STANDARD BRASS DISK STAMPED 030130 ON BRIDGE AT WEST OREM DRIVE (E-BOUND) AND AT SE CORNER OF BRIDGE IN KEYMAP 571K IN THE SIMS WATERSHED NEAR STREAM C156-00-00: ELEV = 60.47 FT. NAVD88\GEOID 03

II. FLOOD PLAIN DETERMINATION BASED ON GROUND ELEVATION
☒ PROPERTY LIES ENTIRELY ABOVE THE BASE FLOOD LEVEL AND IN SHADED ZONE "X"
☐ PROPERTY LIES PARTIALLY OR ENTIRELY BELOW THE BASE FLOOD LEVEL

III. FLOODPLAIN STORAGE SUMMARY (APPLIES ONLY TO PORTION OF LAND LOCATED WITHIN FLOODPLAIN AS DELINEATED BY FIRM PANEL).
A. TOTAL VOLUME OF MATERIAL PROPOSED TO BE PLACED WITHIN THE FIRM DELINEATED FLOODPLAIN (FILL, BASE, CONCRETE, ASPHALT, ETC.):
i.e., BELOW ELEVATION _____ (2001 ADJ.) _____ CUBIC YARDS
B. TOTAL VOLUME OF MATERIAL PROPOSED TO BE REMOVED FROM THE FIRM DELINEATED FLOODPLAIN:
i.e., BELOW ELEVATION _____ (2001 ADJ.) _____ CUBIC YARDS

NOTES:
I. COMPLETE FOR ALL PROJECTS
II. COMPLETE ONLY IF PROJECT IS ADJACENT TO 100-YEAR FLOOD PLAIN

IV. ☐ LOMR REQUIRED

VERIFIED BY: Brett Gilcrease 1/25/2011

9. WORK IN HCFCD RIGHT-OF-WAY

I. TYPE OF WORK TO BE PERFORMED IN CHANNEL
☐ OUTFALL
☒ UTILITY CROSSING
☐ ROADWAY BRIDGE / CULVERT CROSSING
☐ FILL ACTIVITY
☐ REHABILITATION OF CHANNEL
☐ MAINTENANCE
☐ TEMPORARY CROSSING
☐ OTHER

II. PERMIT
☐ US ARMY CORPS ENGINEERS NATIONWIDE PERMIT NUMBER(S) _____
☐ US ARMY CORPS OF ENGINEERS INDIVIDUAL PERMITS
☒ OTHER
☐ NO PERMITS REQUIRED
EXPLAIN: Harris County Notification

III. REFERENCE / BASIS OF DETERMINATION
☐ ENVIRONMENTAL CONSULTANT REPORT
BY _____
REPORT TITLE _____
REPORT DATE _____
☐ OTHER N/A

NOTES:
I. – III. REQUIRED ON PROJECTS WITH WORK IN A HCFCD CHANNEL. PLEASE REFERENCE SECTION 17 OF THE FLOOD CONTROL DISTRICT POLICY, CRITERIA, AND PROCEDURE MANUAL FOR MORE INFORMATION.

10 SITEWORK SUMMARY

HARRIS COUNTY ADMINISTRATIVE DATA
(THIS SECTION TO BE FILLED OUT BY HARRIS COUNTY REVIEWER)
CRITICAL FACILITY ☐ YES ☐ NO
STORM WATER QUALITY
☐ DETENTION
☐ DRAINAGE SWALE
☐ CUT_____CU.YDS. / FILL_____CU.YDS.
☐ FILL PLACEMENT _____#/ACRES
☐ ORGANIZED SEWER ☐ PUBLIC ☐ PRIVATE
☐ ORGANIZED WATER ☐ PUBLIC ☐ PRIVATE
☐ UNDERGROUND UTILITIES (COMBINATION WATER/SEWER)
☐ PAVING ☐ PUBLIC ☐ PRIVATE
☐ DRIVEWAY WITH CULVERT____ CURB AND GUTTER____ TXDOT____
☐ CULVERT____
SEPTIC ☐ NO ☐ EXISTING ☐ PROPOSED
☒ OTHER Notification

SIGN CLASSIFICATION
LOCATED IN:
☐ ETJ
☐ SCENIC DISTRICT
☐ TOLL ROAD

EASEMENT AUTHORIZATION
☐ LETTERS _____

11 CURB RAMPS / SIDEWALK

CURB RAMPS PROPOSED ☐ YES ☒ NO
SIDEWALKS PROPOSED ☒ NO
A. HOME BUILDER ☐ YES
B. DEVELOPER ☐ YES
C. H.O.A. ☐ YES
D. OTHERS _____

12 LANDSCAPING

☐ REQUIRED AND SHOWN ON SHEET(S) _____
☒ NOT REQUIRED

NOTES:
A PERMIT IS REQUIRED FOR EACH SCOPE OF WORK ON SITE.
A NOTIFICATION IS REQUIRED FOR EACH SCOPE OF WORK IN HC OR HCFCD ROW. REFER TO www.eng.hctx.net/permits FOR EACH SCOPE OF WORK IN HC OR IN HCFCD ROW.

HCPID SIGNATURE BLOCK

PROJECT NAME:
PROPOSED 48-INCH/42-INCH WATER LINE ALONG EXISTING EASEMENTS, WEST OREM, CHIMNEY ROCK, RIVER BLUFF, SUMMIT RIDGE, WOOD RIVER, AND COACHCREEK FROM SIMS BAYOU PUMP STATION (SBPS) TO HILLCROFT
WBS NO. S-000900-0109-4

WAS ACCEPTED BY THE FOLLOWING GROUPS FOR THE PURPOSES LISTED BELOW:

ENGINEERING DIVISION

BY _____ INTERPOSE NO OBJECTION _____ DATE
BY _____ AS TO PAVING AND/OR DRAINAGE ONLY _____ DATE
BY _____ AS TO LOCATION OF ITEMS IN COUNTY RIGHT OF WAY 1-26-11 DATE
BY No PSWQF Required AS TO STORM WATER QUALITY JL 1/21/11 DATE

ADDITIONAL COMMENTS:

HARRIS COUNTY FLOOD CONTROL DISTRICT

INTERPOSE NO OBJECTION
BY _____ FOR ITEMS LOCATED OUTSIDE OF HCFCD RIGHT-OF-WAY DATE _____
APPROVED:
BY _____ FOR ITEMS LOCATED WITHIN EXISTING HCFCD RIGHT-OF-WAY DATE 1/26/11
APPROVED:
BY _____ FOR ITEMS LOCATED WITHIN PROPOSED HCFCD RIGHT-OF-WAY DATE _____

ADDITIONAL COMMENTS:

1-14-11
THE STATE OF TEXAS
ALISA GRUBER
95685
LICENSED PROFESSIONAL ENGINEER
Lockwood, Andrews & Newnam, Inc.
Firm No. 2614

THE PROJECT WAS REVIEWED, HOWEVER, THIS DOES NOT MEAN THE ENTIRE PROJECT, INCLUDING ALL SUPPORTING DATA AND CALCULATIONS HAVE BEEN COMPLETELY CHECKED AND VERIFIED. THESE DRAWINGS ARE SIGNED, DATED AND SEALED BY A PROFESSIONAL ENGINEER LICENSED TO PRACTICE IN THE STATE OF TEXAS, WHICH THEREFORE CONVEYS THE ENGINEER'S RESPONSIBILITY AND ACCOUNTABILITY. THIS DOES NOT RELIEVE ANY PARTY FROM COMPLYING WITH APPROPRIATE FEDERAL, STATE AND LOCAL ENVIRONMENTAL RULES, LAWS, AND REGULATIONS AND ANY OTHER LEGALLY ADOPTED REGULATION OR ORDINANCE RELATED TO LAND DEVELOPMENT. IF THE CITY SIGNATURES ARE REQUIRED BY ORDINANCE, COUNTY PERMITS WILL NOT BE ISSUED UNTIL SUCH SIGNATURES ARE OBTAINED. THESE SIGNATURES ARE VALID FOR A MAXIMUM OF TWO YEARS.

ENGINEER'S CERTIFICATION

I, ALISA GRUBER, A LICENSED PROFESSIONAL ENGINEER IN THE STATE OF TEXAS, DO HEREBY CERTIFY THAT THE INFORMATION PRESENTED ON THIS SHEET IS TRUE AND CORRECT TO THE BEST OF MY KNOWLEDGE AND THAT I AM NOT VIOLATING ANY PROVISION OF THE CURRENT TEXAS ENGINEERING PRACTICE ACT AND RULES CONCERNING THE PRACTICE OF ENGINEERING AND PROFESSIONAL ENGINEERING LICENSURE.

ANY VIOLATIONS WILL BE FORWARDED TO THE HARRIS COUNTY DISTRICT ATTORNEY'S OFFICE FOR PROSECUTION.

THE COMPLETED PROJECT CONSISTS OF DRAWING SHEETS 1 THRU 91 .

SEAL _____ SIGNATURE _____ DATE _____

REVISIONS

DATE	SHEET NO.	DESCRIPTION	H.C. APPROVED DATE

PROJECT NO. 2008432

SHEET NUMBER _____ OF _____

HARRIS COUNTY
PUBLIC INFRASTRUCTURE DEPARTMENT
EXPRESS REVIEW SHEET

PUBLIC WORKS AND ENGINEERING ACCEPTED AND FILED 48326 CITY DRAWING NUMBER HOUSTON TEXAS

VERSION 11.0 AUGUST 4, 2009