FED RD DIV NO	FEDERAL AID PROJECT NO	SHEET NO
6	STP 2013 (882) HES	1

STATE	STATE DIST NO	COUNTY
TEXAS	HOUSTON	HARRIS

CONT	SECT	JOB	HIGHWAY NO
0027	09	099	US 90 A

STATE OF TEXAS
DEPARTMENT OF TRANSPORTATION

PLANS OF PROPOSED
STATE HIGHWAY IMPROVEMENT

PROJECT NO.
STP 2013(882)HES

STATE CONTROL
CSJ 0027-09-099

NET LENGTH OF PROJECT = 24,578.00 FT = 4.654 MI.

ROADWAY	BRIDGES	TOTAL
24,578.00 FT = 4.654 MI.	0 FT = 0 MI.	24,578.00 FT = 4.654 MI.

HARRIS COUNTY
US 90 A

LIMITS: FORT BEND COUNTY LINE TO 0.33 MILES WEST OF HIRAM CLARKE RD

FOR THE INSTALLATION OF: MEDIAN BARRIERS

CONSISTING OF: INSTALLING MEDIAN BARRIERS, RIPRAP AND CRASH CUSHION ATTENUATORS
PROJECT CLASSIFICATION: SFT 3

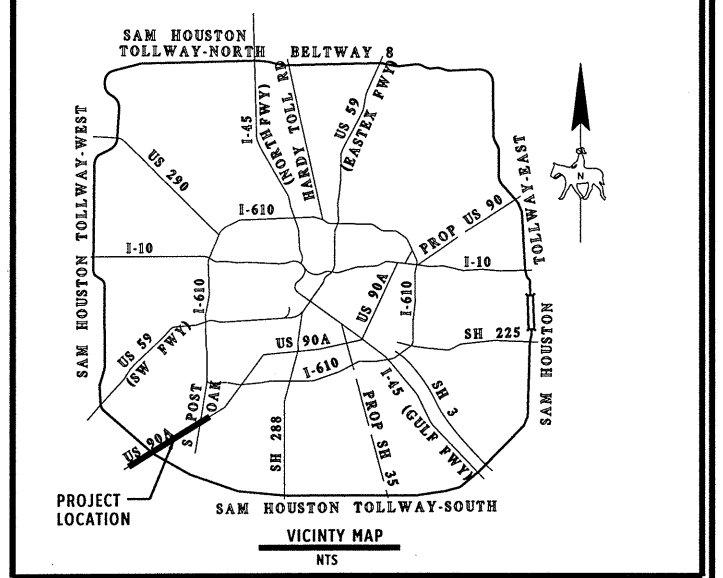

VICINITY MAP
NTS

DESIGN SPEED	
MAIN LANES	55 MPH
RAMPS	55 MPH
FRONTAGE ROADS	N/A
DESIGN ADT	
Mainlanes	
2013	61,600
2033	117,500
HWY-FUNCTIONAL CLASSIFICATION	
Principal Arterial (Other)	

BEGIN PROJECT
CSJ 0027-09-099
STA 8+00.00
REF MARKER 0690+00.642
DFO 162.770
LONG = -95.450284
LAT = 29.652565

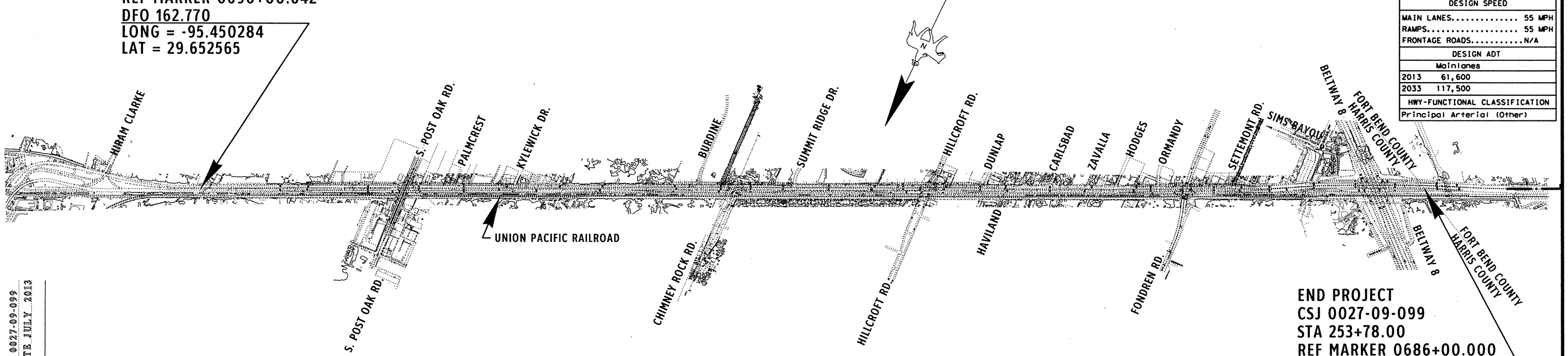

END PROJECT
CSJ 0027-09-099
STA 253+78.00
REF MARKER 0686+00.000
DFO 158.116
LONG = -95.520794
LAT = 29.625317

LAYOUT MAP
NTS

SUBMITTED FOR LETTING

MAYOR, THE CITY OF STAFFORD

TEXAS DEPARTMENT OF TRANSPORTATION

SUBMITTED FOR LETTING 4-15-13

SUPERVISING DESIGN ENGINEER

APPROVED FOR LETTING

DIRECTOR, TRAFFIC OPERATIONS DIVISION

RECOMMENDED FOR LETTING 4/15/13

DISTRICT ENGINEER

APPROVED FOR LETTING 6/7/13

DIRECTOR, DESIGN DIVISION

NOTES:

HORIZONTAL CONTROL
ALL BEARINGS AND COORDINATES SHOWN ARE BASED ON THE TEXAS STATE PLANE COORDINATE SYSTEM, CENTRAL ZONE, NORTH AMERICAN DATUM OF 1983 (NAD83), 1993 ADJUSTMENT.

ALL DISTANCES AND COORDINATES ARE SURFACE DATUM AND MAY BE CONVERTED TO GRID BY MULTIPLYING BY A COMBINES ADJUSTMENT FACTOR OF 0.999970.

VERTICAL CONTROL
VERTICAL CONTROL IS REFERENCED TO NORTH AMERICAN VERTICAL DATUM OF 1988 (NAVD88), 1991 ADJUSTMENT.

SPECIFICATIONS ADOPTED BY THE TEXAS DEPARTMENT OF TRANSPORTATION, JUNE 1, 2004, AND THE SPECIFICATION ITEMS LISTED AND DATED AS FOLLOWS SHALL GOVERN ON THIS PROJECT: REQUIRED CONTRACT PROVISIONS FOR ALL FEDERAL-AID CONSTRUCTION CONTRACTS (FORM FHWA 1273, MAY, 2012).

ATTACHMENT NO. 75 TO SPECIAL AGREEMENT FOR CONSTRUCTION MAINTENANCE AND OPERATION OF STREET ILLUMINATION SYSTEM WITHIN MUNICIPALITY, DATED JUNE 5, 1963. THE CITY-STATE MAINTENANCE AND OPERATION RESPONSIBILITIES SHALL BE AS HERETOFORE AGREED TO, ACCEPTED AND SPECIFIED IN THE AGREEMENT TO WHICH THESE PLANS ARE MADE A PART.

EQUATIONS	:	NONE
EXCEPTIONS	:	NONE
RR CROSSINGS	:	NONE

COUNTY Harris PROJ NO 0027-09-099
HWY NO. US 90A LETTING DATE JULY 2013
DATE ACCEPTED

FILE: US90A\US90A@HIRAMCLARKE...JAY WASHINGTON

© 2013 by Texas Department of Transportation
all rights reserved

SHEET	DESCRIPTION
	I. GENERAL
1	TITLE SHEET
2	INDEX SHEET
3-7	GENERAL NOTES
8	SUMMARY OF QUANTITIES
9	E & C SHEET
	II. TRAFFIC CONTROL PLAN
10	# TRAFFIC CONTROL PLAN TCP(2-6)-12
11	# TRAFFIC CONTROL PLAN TYPICAL DETAILS WZ(TD)-03
12-23	# BARRICADE AND CONSTRUCTION - STANDARDS BC(1)-07 TO BC(12)-07
	III. ROADWAY DETAILS
24-41	US 90 A ROADWAY PLAN
42-44	US 90 A TYPICAL SECTIONS
	IV. ROADWAY STANDARDS
*45-46	# PRECAST CONCRETE TRAFFIC BARRIER PCTB *(HDS)*
47	# CONCRETE TRAFFIC BARRIER SIGN MOUNT SMD(CTB)-04 *(HDS)*
47A	# SIGN MOUNTING DETAILS SMALL ROADSIDE SIGNS GENERAL NOTES AND DETAILS SMD(GEN)-08
**48-49	# REUSABLE ENERGY ABSORBING CRASH TERMINAL (NARROW REACT 350)REACT (N)-05
**49A	# REUSABLE ENERGY ABSORBING CRASH TERMINAL (REACT 350 NARROW)(REACT 350 II NARROW) REACT (N)-12
50	# CONCRETE RIPRAP AND SHOULDER DRAINS EMBANKMENTS AT BRIDGE ENDS TYPES RR8 & RR9 CRR
51-52	# CONTINUOUSLY REINFORCED CONCRETE PAVEMENT HOUSTON SUPPLEMENT(CRCP-HS) *(HDS)*
	V. MISCELLANEOUS ITEMS STANDARDS
53	# FERTILIZER, SEED, SOD, STRAW, COMPOST, AND WATER *(HDS)*
54	# TEMPORARY EROSION, SEDIMENT, AND WATER POLLUTION CONTROL MEASURES FENCE AND BALED HAY EC(1)-09
55	# TEMPORARY EROSION, SEDIMENT, AND WATER POLLUTION CONTROL MEASURES ROCK FILTER DAMS EC(2)-93
56	# TEMPORARY EROSION, SEDIMENT, AND WATER POLLUTION CONTROL MEASURES CONSTRUCTION EXITS EC(3)-93
	VI. ENVIRONMENTAL
57	TXDOT STORM WATER POLLUTION PREVENTION PLAN SW3P
58-75	STORM WATER PREVENTION PLAN LAYOUT
76-77	ENVIRONMENTAL PERMITS ISSUES AND COMMITMENTS (EPIC)

NOTES:

* USE EXISTING PCTB FROM STOCKPILE. NO NEW PCTB WILL BE CAST.

** USE EXISTING CRASH ATTENUATORS FROM BEGINNING PROJECT LOCATION. NO NEW CRASH ATTENUATORS WILL BE PURCHASED.

(HDS) HOUSTON DISTRICT STANDARDS

THE STANDARD SHEETS SPECIFICALLY IDENTIFIED ABOVE WITH A POUND SIGN(#) HAVE BEEN SELECTED BY ME, OR UNDER MY RESPONSIBLE SUPERVISION AS BEING APPLICABLE TO THIS PROJECT.

STATE OF TEXAS
BARBARA D. RUSSELL
100097
LICENSED PROFESSIONAL ENGINEER

Barbara Russell, P.E.
4·15·13

© 2013 TxDOT

TEXAS DEPARTMENT OF TRANSPORTATION
HOUSTON DISTRICT

US 90 A
INDEX SHEET

SCALE	FED. RD. DIV. NO.	STATE	PROJECT NO.			HIGHWAY
N. T. S.	6	TEXAS				US 90 A
REVISIONS	STATE DISTRICT	COUNTY	CONTROL	SECTION	JOB	SHEET NO.
	12	HARRIS	0027	09	099	2

FILE: US90A@HIRAMCLARK*INDEX.DGN ... JAY WASHINGTON

General Notes:
General:

If fixed features require, the governing slopes shown may vary between the limits shown and to the extent determined by the Engineer.

Superelevate the curves to match the existing surface.

Unless otherwise shown on the plans or otherwise directed, commence work after sunrise and ensure construction equipment is off the road by sunset.

Procure permits and licenses, which are to be issued by the City, County, or Municipal Utility District.

References to manufacturer's trade name or catalog numbers are for the purpose of identification only. Similar materials from other manufacturers are permitted if they are of equal quality, comply with the specifications for this project, and are approved, except for roadway illumination, electrical, and traffic signal items.

The React(N)-05 Standards are included in the plan set as the crash cushions are existing and they will be moved and reset.

If a foundation is to be placed where a riprap surface or an asphalt concrete surface presently exists, use caution in breaking out the existing surface for placement. Break out no greater area than is required to place the foundation. After placing the foundation, wrap the periphery with 0.5 in. pre-molded mastic expansion joint. Then replace the remaining portion of the broken out surface with Class A or Class C concrete or cold mix asphalt concrete to the exact slope, pattern, and thickness off the existing riprap or asphalt. Payment for breaking out the existing surface, wrapping the foundation, and replacing the surface is subsidiary to the various bid items.

General: Site Management

Mark stations every 100ft. and maintain the markings for the project duration. Remove the station markings at the completion of the project. This work is subsidiary to the various bid items.

Do not mix or store materials, or store or repair equipment, on top of concrete pavement or bridge decks unless authorized by the Engineer. Permission will be granted to store materials on surfaces if no damage or discoloration will result.

Personal vehicles of employees are not permitted to park within the right of way, including sections closed to public traffic. Employees may park on the right of way at the Contractor's office, equipment, and materials storage yard sites.

Assume ownership of debris and dispose of at an approved location. Do not dispose of debris on private property unless approved in writing by the District Engineer.

Control the dust caused by construction operations. For sweeping the base material in preparation for laying asphalt and for sweeping the finished concrete pavement, use one of the following types of sweepers or equal:

Tricycle Type	**Truck Type - 4 Wheel**
Wayne Series 900	M-B Cruiser II
Elgin White Wing	Wayne Model 945
Elgin Pelican	Mobile TE-3
	Mobile TE-4
	Murphy 4042

General: Traffic Control and Construction

When design details are not shown on the plans, provide signs and arrows conforming to the latest "Standard Highway Sign Designs for Texas" manual.

General: Utilities

Consider the locations of underground utilities depicted in the plans as approximate and employ responsible care to avoid damaging utility facilities. Depending upon scope and magnitude of planned construction activities, advanced field confirmation by the utility owner or operator may be prudent. Where possible, protect and preserve permanent signs, markers, and designations of underground facilities.

If the Contractor damages or cause damage (breaks, leaks, nicks, dents, gouges, etc.) to the utility, contact the utility facility owner or operator immediately.

Be aware that an operational Computerized Transportation Management System (CTMS) exists within the limits of this project and that the system must remain operational throughout construction. If the Contractor damages or cause damage to this system, repair such damage within 8 hours of occurrence at no cost to the Department. In the event of system damage, notify the TxDOT Houston District Maintenance Office (Mr. David Fink at 713-881-3063) within one hour of occurrence. Failure of the Contractor to repair damage to the main fiber optic cable and CCTV cable trunk lines, which convey all corridor information to TranStar, will result in the Contractor being billed for the full cost of emergency repairs.

At least 48 hours before starting work, make arrangements for locating existing Department-owned above ground and underground fiber optic, communications, power, illumination, and traffic signal cabling and conduit. Do this by calling the Department's Houston District Traffic Signal Operations Office 713-802-5662 to schedule marking of underground lines on the ground. Use caution if working in these areas to avoid damaging or interfering with existing facilities.

Notify the Engineer at least 48 hours before constructing junction boxes at storm drain and utility intersections.

Install or remove poles and luminaires located near overhead or underground electrical lines using established industry and utility safety practices. Consult the appropriate utility company before beginning such work.

If overhead or underground power lines need to be de-energized, contact the electrical service provider to perform this work. Costs associated with de- energizing the power lines or other protective measures required are at no expense to the Department.

If working near power lines, comply with the appropriate sections of Texas State Law and Federal Regulations relating to the type of work involved.

Before beginning any underground work, notify the City of Houston's Chef Inspector, Public Works and Engineering, at (713) 859-3371 to establish the locations of any existing electrical systems for lighting facilities within the limits of this project.

Item 7: Legal Relations and Responsibilities

Do not initiate activities in a Project Specific Location (PSL), associated with a U.S. Army Corps of Engineers (USACE) permit area, that have not been previously evaluated by the USACE as part of the permit review of this project. Such activities include those pertaining to, but are not limited to, haul roads, equipment staging areas, borrow and disposal sites. Associated defined here means materials are delivered to or from the PSL. The permit area includes the waters of the U.S. or associated wetlands affected by activities associated with this project. Special restrictions may be required for such work. Assume responsibility for consultations with the USACE regarding activities, including PSLs that have not been previously evaluated by the USACE. Provide the Department with a copy of consultations or approvals from the USACE before initiating activities.

The Contractor may proceed with activities in PSLs that do not affect a USACE permit area if a self-determination has been made that the PSL is non-jurisdictional or if proper USACE clearances have been obtained in jurisdictional areas or have been previously evaluated by the USACE as part of the permit review of this project. The Contractor is solely responsible for documenting any determinations that their activities do not affect a USACE permit area. Maintain copies of their determinations for review by the Department or any regulatory agency.

Document and coordinate with the USACE, if required, before hauling any excavation from or hauling any embankment to a USACE permit area by either 1 or 2 below:

1. **Restricted Use of Materials for the Previously Evaluated Permit Areas.**
   Document both the Project Specific Locations (PSL) and their authorization.

Maintain copies for review by the Department or any regulatory agency. When an area within the project limits has been evaluated by the USACE as part of the permit process for this project:

a. Suitable excavation of required material in the areas shown on the plans and cross sections as specified in the Item, "Excavation" is used for permanent or temporary fill (under the Item, "Embankment") within a USACE permit area.
b. Suitable embankment (under the Item, "Embankment") from within the USACE permit area is used as fill within a USACE evaluated area.
c. Unsuitable excavation or excess excavation, "Waste" (under the Item, "Excavation"), that is disposed of at a location approved within a USACE evaluated area.

2. **Contractor Materials from Areas Other than Previously Evaluated Areas.**
   Provide the Department with a copy of USACE coordination or approvals before initiating any activities for an area within the project limits that has not been evaluated by the USACE or for any off right of way locations used for the following, but not limited to, haul roads, equipment staging areas, borrow and disposal sites:
   a. The Item, "Embankment" used for temporary or permanent fill within a USACE permit area.
   b. Unsuitable excavation or excess excavation, "Waste" (under the Item, "Excavation"), that is disposed of outside a USACE evaluated area.

This project does not require a U.S. Army Corps of Engineers (USACE) Section 404 Permit before letting, but if a permit is needed during construction, assume responsibility for preparing the permit application. Submit the permit application to the Department's District Environmental Section for approval. Once the permit application is approved, the Department will submit it to the USACE. Assume responsibility for the requested revisions, in coordination with the Department's District Environmental Section.

Maintain the roadway slope stability. Maintaining slope stability is subsidiary to the various bid items.

Item 8: Prosecution and Progress

Working days will be computed and charged based on a Standard Workweek in accordance with Section 8.3.A.4

The Lane Closure Assessment Fee is $ *1,500.00*. This fee applies to the Contractor for closures or obstructions that overlap into restricted hour traffic for each hour or portion thereof, per lane, regardless of the length of lane closure or obstruction. For Restricted Hours subject to Lane Assessment Fee, refer to the Item, "Barricades, Signs, and Traffic Handling."

Item 104: Removing Concrete

Removing concrete curb is paid as a separate bid item if the existing pavement on which it rests is not removed at the same time.

Item 110: Excavation

If manipulating the excavated material requires moving the same material more than once to accomplish the desired results, the excavation is measured and paid for only once under Item 432.

Item 360: Concrete Pavement

This is not a pay item; it is a reference item paid under Item 432.

Where the pavement curb is left off for a later tie, provide the dowels or the tie bars as indicated on the paving detail sheets. The dowel bars and tie bars are subsidiary to the various bid items.

Repair portions of the concrete pavement surfaces that are damaged while in a plastic state before that area receives permanent pavement markings and opens to traffic. Perform repairs that are structurally equivalent to and cosmetically uniform with the adjacent undamaged areas. Do not repair by grouting onto the surface.

On pavement widening, hand finishing in place of the longitudinal float will be permitted.

Where existing pavement is widened with new pavement, place the new pavement a minimum of 2 ft. wide.

Equip the batching plants to proportion by weight, aggregates and bulk cement, using approved proportioning devices and approved automatic scales.

Do not use limestone dust of fracture as fine aggregate.

If the concrete design requires greater than 5.5 sacks of cementitious material per cubic yard, obtain written approval. If placing concrete pavement mixes from April 1 to October 31, inclusive, us a minimum of 25 percent by weigh of Class F Fly Ash.

Perform saw cutting as shown on the plans in accordance with Section 360.4.J, "Sawing Joints." This saw cutting is subsidiary to this bid item.

Use coarse aggregate to produce concrete with a Coefficient of Thermal Expansion (CTE) of less than $5.0x10^{-6}$ in/in/°F. Before construction, submit test specimens to the TxDOT Construction Division for aggregate acceptance. Provide samples or test specimens as directed. The TxDOT Construction Division will perform testing. Test results are final. Testing is required for naturally occurring aggregates.

Item 360, 420, 421: All Concrete Items

For the Department's concrete cylinder split samples, transport the test cylinders to the Houston District Laboratory located at 7600 Washington Avenue in Houston, or to the appropriate Area Laboratory, when applicable. These are not pay items; they are reference items paid under Item 432.

Item 432: Riprap

If stone riprap is shown on the plans, use common stone riprap in accordance with Section 432.2.C.3, placed dry in accordance with Section 432.3.B.3. Do not grout. Crushed concrete may also be used.

Item 502: Barricades, Signs, and Traffic Handling

Use a traffic control plan for handling traffic through the various phases of construction. Follow the phasing sequence unless otherwise agreed upon by the Area Engineer and the Project Manager. Ensure this plan conforms to the latest "Texas Manual on Uniform Traffic Control Devices" and the latest Barricade and Construction (BC) Standard Sheets.

Submit changes to the traffic control plan to the Area Engineer. Provide a layout showing the construction phasing, signs, striping, and signalizations for changes to the original traffic control plan.

Furnish and maintain the barricades and warning signs, including the necessary temporary and portable traffic control devices, during the various phases of construction. Place and construct these barricades and warning signs in accordance with the latest "Texas Manual on Uniform Traffic Control Devices" for typical construction layouts.

Cover work zone signs when work related to the signs is not in progress, or when any hazard related to the signs no longer exists.

Keep the delineation devices, signs, and pavement markings clean. This work is subsidiary to the Item, "Barricades, Signs, and Traffic Handling."

Cover or remove the permanent signs and construction signs that are incorrect or that do not apply to the current situation for a particular phase.

Do not mount signs on drums or barricades, except those listed in the latest Barricades and Construction standard sheets.

Use traffic cones for daytime work only. Replace the cones with plastic drums during nighttime hours.

Place positive barriers to protect drop-off conditions greater than 2 ft. within the clear zone that remain overnight.

Use shadow vehicles with Truck Mounted Attenuators (TMA) for lane closures during construction. Do not reduce the existing number of lanes open to traffic except as shown on the following time schedule:

One Lane Closure

Day	Daytime Closure Hours	Nighttime Closure Hours	Restricted Hours Subject to Lane Assessment Fee
Monday	8:30 AM – 3:30 PM	N/A	5:00 AM – 8:30 AM 3:30 PM – 7:00 PM
Tuesday	8:30 AM – 3:30 PM	N/A	5:00 AM – 8:30 AM 3:30 PM – 7:00 PM
Wednesday	8:30 AM – 3:30 PM	N/A	5:00 AM – 8:30 AM 3:30 PM – 7:00 PM
Thursday	8:30 AM – 3:30 PM	N/A	5:00 AM – 8:30 AM 3:30 PM – 7:00 PM
Friday	8:30 AM – 3:30 PM	N/A	5:00 AM – 8:30 AM 3:30 PM – 7:00 PM
Saturday	N/A	N/A	N/A
Sunday	N/A	N/A	N/A

The above times are approved for the traffic control conditions listed. The Area Engineer may approve other closure times if traffic counts warrant. The Area Engineer may reduce the above times for special events.

The Contractor Force Account "Safety Contingency" that has been established for this project is intended to be utilized for work zone enhancements, to improve the effectiveness of the Traffic Control Plan, that could not be foreseen in the project planning and design stage. These enhancements will be mutually agreed upon by the Engineer and the Contractor's Responsible Person based on weekly or more frequent traffic management reviews on the project. The "Safety Contingency" is not intended to be used in lieu of bid items established by the contract.

Item 512: Portable Concrete Traffic Barrier

Transport Standard Height Concrete Traffic Barriers (including JJ Hook and Safety Shape) used for traffic handling from the Department stockpile located on the south side of IH 610 at Cedar Crest Blvd. (located across IH 610 from Long Drive).

⚠ Anchor all barrier throughout the job as shown on the appropriate standard. All cost for drilling concrete riprap / bridge deck / concrete barrier / concrete pavement, dowels, and associated work required will be subsidiary to Item 512 "Portable Concrete Traffic Barrier."

Item 545: Crash Cushion Attenuators

After completing the project, return remaining unused crash cushion attenuators units to the Area Office Maintenance yard or as directed, at no cost to the Department.

Item 644: Small Roadside Sign Supports and Assemblies

See notes for relocated signs.

When design details are not shown on the plans, provide signs and arrows conforming to the latest "Standard Highway Sign Designs for Texas" manual.

Assume ownership of the removed existing signs.

Locations of the relocated signs are approximate. Before placing them, obtain approval of and then stake the exact locations for these signs.

Replace existing signs that become damaged during relocation at no expense to the Department.

Use the existing panel supports if removing existing guide signs and if placing new panels of different sizes at the same location. Extend the supports, if needed. If the supports extend over the top of the panel, cut off the supports at the top of the panel or the top of the truss, whichever is higher.

If sign lighting and walkways are not used, trim the sign support brackets flush with the bottoms of the signs.

Assume ownership of removed existing overhead sign supports and other removed materials.

Item 1122: Temporary Erosion, Sedimentation and Environmental Controls

The use of hay bales is not permitted as Storm Water Pollution Prevention Plan (SW3P) measures.

The Storm Water Pollution Prevention Plan (SW3P) consists of temporary erosion control measures needed and provided for under this item. The disturbed area is less than one acre and use of erosion control measures is not anticipated. If physical conditions encountered at the job site require necessary controls, BMP installation, maintenance, and removal will be paid as extra work on a force account basis per Articles 4.2 and 9.5. Since the disturbed area is less than 5 acres, a "Notice of Intent" (NOI) is not required.

⚠1 REVISED 7-9-13

Project Number:

Sheet 7

County: Harris

Control: 0027-09-099

Highway: US 90 A

Use appropriate measures to prevent, minimize, and control the spill of hazardous materials in the construction staging area. Remove and dispose of materials in compliance with State and Federal laws.

Before starting construction, review with the Engineer the SW3P used for temporary erosion control as outlined on the plans. Before construction, place the temporary erosion and sedimentation control features as shown on the SW3P.

Implement temporary and permanent erosion control measures to comply with the National Pollution Discharge Elimination System (NPDES) general permit under the Clean Water Act.

Before starting grading operations and during the project duration, place the temporary or permanent erosion control measures to prevent sediment from leaving the right of way.

REVISED
7/9/13

QUANTITIES

PLAN SHEET NO.	104-2028 REMOVING CONC (MISC) SY	***110-2001 EXCAVATION (ROADWAY) CY	432-2001 RIPRAP (CONC) (4 IN) CY	500-2001 MOBILIZATION LS	502-2001 BARRICADES, SIGNS AND TRAFFIC HANDLING MO	**512-2010 PORT CTB (DES SOURCE) (SAFETY SH) (TY 1) LF	***545-2023 CRASH CUSH ATTEN (MOVE & RESET) (REACT) (N) EA	644-2058 RELOCATE SM RD SN SUP & AM TY S80 EA	1122-2048 BIOGRD EROSN CONT LOGS LF	1122-2056 BIODEGRADBLE EROSION CONTROL LOGS REMOV LF	5050-2001 CONC TRAF BAR CONNECT HDWDR (PORT) EA	6834-2002 PORTABLE CHANGEABLE MESSAGE SIGN EA
SHEET 1 OF 18	88	15.00	15.00			268.00	0	0	12	12	8	1
SHEET 2 OF 18	0	0	0			1506.00	0	1	48	48	50	0
SHEET 3 OF 18	0	0	0			1473.00	0	0	42	42	49	0
SHEET 4 OF 18	0	0	0			1333.00	0	1	72	72	44	0
SHEET 5 OF 18	0	8.00	8.00			1415.00	0	0	30	30	47	0
SHEET 6 OF 18	0	48.00	48.00			1453.00	0	0	72	72	48	0
SHEET 7 OF 18	0	0	0			1466.00	0	1	54	54	48	0
SHEET 8 OF 18	0	0	0			1486.00	0	0	48	48	49	0
SHEET 9 OF 18	0	141.00	141.00			1482.00	0	0	36	36	49	0
SHEET 10 OF 18	0	236.00	236.00			1470.00	0	0	78	78	49	0
SHEET 11 OF 18	0	125.00	125.00			1358.00	0	1	42	42	45	0
SHEET 12 OF 18	0	162.00	162.00			1460.00	0	0	108	108	48	0
SHEET 13 OF 18	0	234.00	234.00			1460.00	0	0	78	78	48	0
SHEET 14 OF 18	0	237.00	237.00			1478.00	0	0	72	72	49	0
SHEET 15 OF 18	0	182.00	182.00			1476.00	0	1	126	126	49	0
SHEET 16 OF 18	0	172.00	172.00			1443.00	0	0	66	66	48	0
SHEET 17 OF 18	0	152.00	152.00			1482.00	0	0	60	60	49	0
SHEET 18 OF 18	0	54.00	54.00			1069.00	1	1	60	60	35	1
TOTALS	88.00	1766.00	1766.00	1	4	24578.00	1	6	1104	1104	812	2

FOR CONTRACTOR'S INFORMATION ONLY

**INCLUDES 24,578.00 LF OF PORT CTB FROM THE STOCKPILE ON IH 610 CEDAR CREST BLVD. (LOCATED ACROSS IH 610 FROM LONG DRIVE)

***INCLUDES MOVING THE EXISTING CRASH CUSHION ATTENUATORS FROM THE BEGINNING OF THE PROJECT AND RESETTING AT THE END OF THE PROJECT

***BID ITEM IS SUBSIDIARY TO PAY ITEM 432-2001

©2013 TxDOT

TEXAS DEPARTMENT OF TRANSPORTATION
HOUSTON DISTRICT

SUMMARY OF QUANTITIES

SCALE	FED. RD. DIV. NO.	STATE	PROJECT NO.			HIGHWAY
N. T. S.	6	TEXAS				US 90A
REVISIONS	STATE DISTRICT	COUNTY	CONTROL	SECTION	JOB	SHEET NO.
	HOU	HARRIS	0027	09	099	8

FILE: US90A@HIRAMCLARKE*QUANTITIES.DGN JAY WASHINGTON

ESTIMATE SUMMARY

PROJECT
CONTROL 0027-09-099

| ROADWAY EST. | ROADWAY FINAL | | |

DISCLAIMER:
The use of this standard is governed by the "Texas Engineering Practice Act". No warranty of any kind is made by TxDOT for any purpose whatsoever. TxDOT assumes no responsibility for the conversion of this standard to other formats or for incorrect results or damages resulting from its use.

DATE:
FILE:

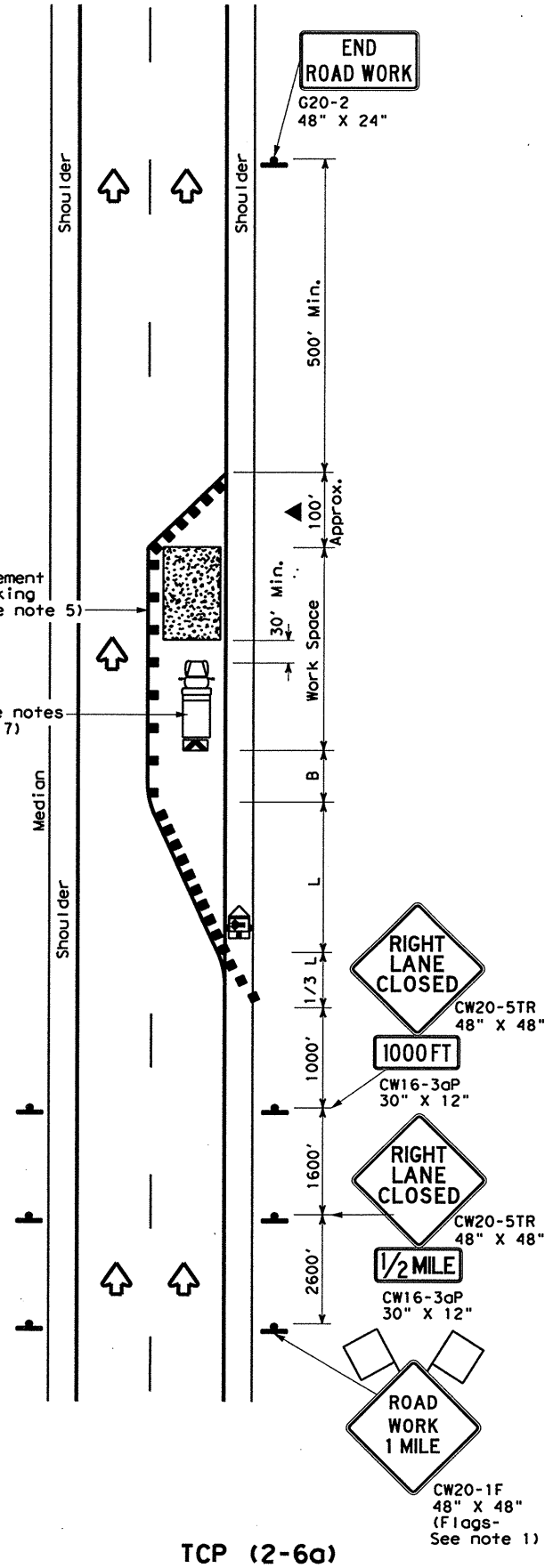

TCP (2-6a)

ONE LANE CLOSURE

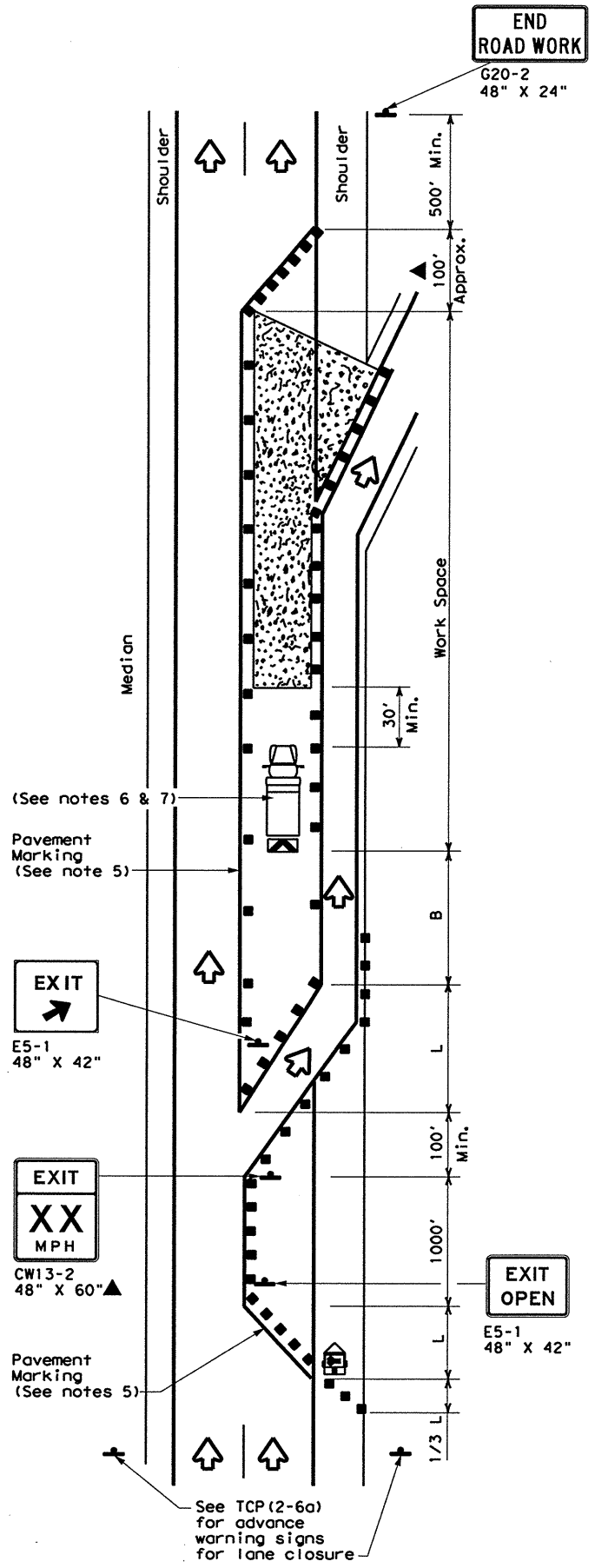

TCP (2-6b)

LANE CLOSURE NEAR EXIT RAMPS

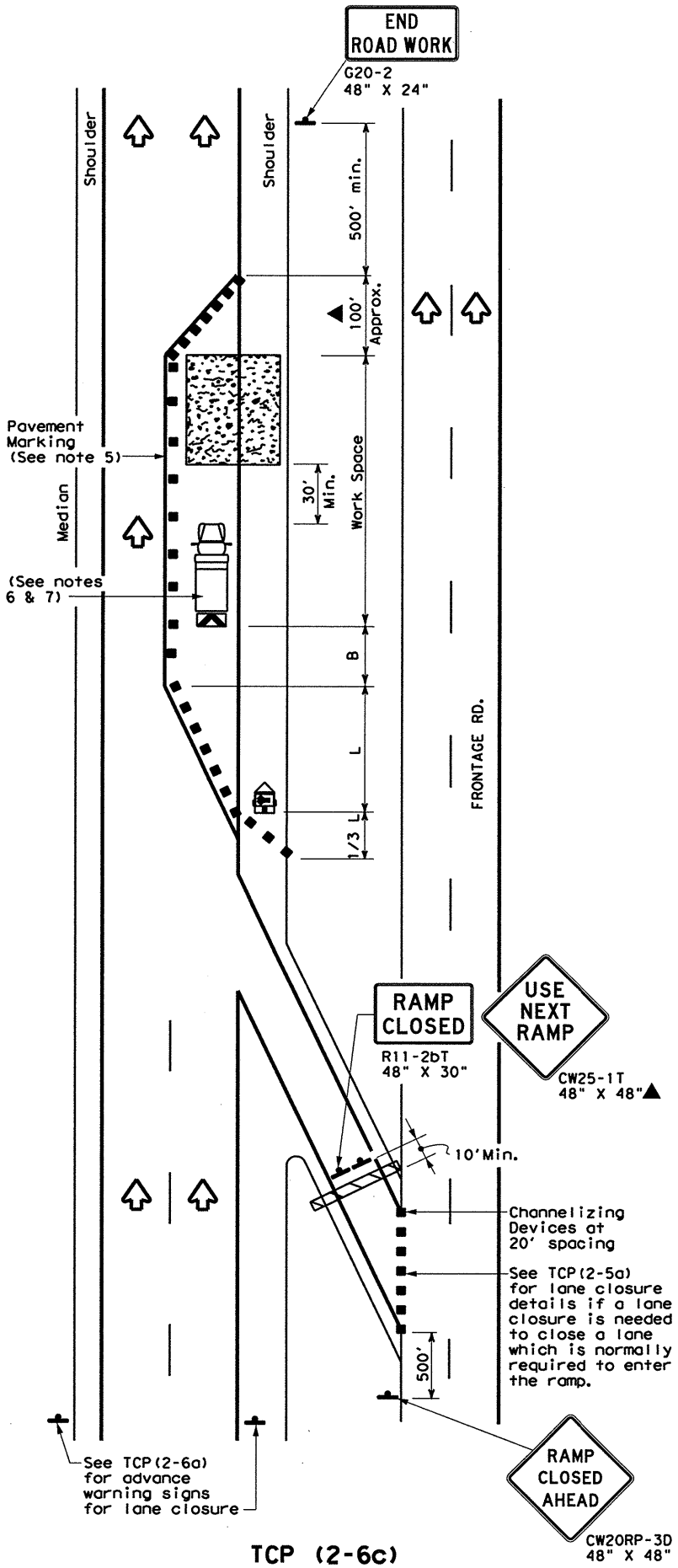

TCP (2-6c)

LANE CLOSURE NEAR ENTRANCE RAMPS

LEGEND			
	Type 3 Barricade		Channelizing Devices
	Heavy Work Vehicle		Truck Mounted Attenuator (TMA)
	Trailer Mounted Flashing Arrow Board	M	Portable Changeable Message Sign (PCMS)
	Sign		Traffic Flow
	Flag		Flagger

Posted Speed *	Formula	Minimum Desirable Taper Lengths ** 10' Offset	11' Offset	12' Offset	Suggested Maximum Spacing of Channelizing Devices On a Taper	On a Tangent	Minimum Sign Spacing "X" Distance	Suggested Longitudinal Buffer Space "B"
30	$L=\frac{WS^2}{60}$	150'	165'	180'	30'	60'	120'	90'
35		205'	225'	245'	35'	70'	160'	120'
40		265'	295'	320'	40'	80'	240'	155'
45	L=WS	450'	495'	540'	45'	90'	320'	195'
50		500'	550'	600'	50'	100'	400'	240'
55		550'	605'	660'	55'	110'	500'	295'
60		600'	660'	720'	60'	120'	600'	350'
65		650'	715'	780'	65'	130'	700'	410'
70		700'	770'	840'	70'	140'	800'	475'
75		750'	825'	900'	75'	150'	900'	540'

* Conventional Roads Only

** Taper lengths have been rounded off.
L=Length of Taper(FT) W=Width of Offset(FT) S=Posted Speed(MPH)

TYPICAL USAGE				
MOBILE	SHORT DURATION	SHORT TERM STATIONARY	INTERMEDIATE TERM STATIONARY	LONG TERM STATIONARY
			✓	✓

GENERAL NOTES

1. Flags attached to signs where shown, are REQUIRED.
2. All traffic control devices illustrated are REQUIRED, except those denoted with the triangle symbol may be omitted when stated elsewhere in the plans, or for routine maintenance work, when approved by the Engineer.
3. Channelizing devices used to close lanes may be supplemented with the Chevron Alignment Sign placed on every other channelizing device. Chevrons may be attached to plastic drums as per BC Standards.
4. Channelizing devices used along the work space or along tangent sections may be supplemented with vertical panels (VP) placed on everyother channelizing device. If night time conditions make it difficult to see at least two VPs, the VPs may be placed on each channelizing device.
5. The placement of pavement markings may be omitted on Intermediate-term stationary work zones with the approval of the Engineer.
6. Shadow Vehicle with TMA and high intensity rotating, flashing, oscillating or strobe lights. Shadow Vehicle with TMA and high intensity rotating, flashing, oscillating or strobe lights. A Shadow Vehicle with a TMA should be used anytime it can be positioned 30 to 100 feet in advance of the area of crew exposure without adversely affecting the performance or quality of the work. If workers are no longer present but road or work conditions require the traffic control to remain in place, Type 3 Barricades or other channelizing devices may be substituted for the Shadow Vehicle and TMA.
7. Additional Shadow Vehicles with TMAs may be positioned in each closed lane, on the shoulder or off the paved surface, next to those shown in order to protect a wider work space.

For construction or maintenance contract work, specific project requirements for shadow vehicles can be found in the project GENERAL NOTES for Item 502, Barricades, Signs and Traffic Handling.

Texas Department of Transportation
Traffic Operations Division

TRAFFIC CONTROL PLAN LANE CLOSURES ON DIVIDED HIGHWAYS

TCP(2-6)-12

© TxDOT December 1985

DN: TXDOT	CK: TXDOT	DW: TXDOT	CK: TXDOT

REVISIONS	CONT	SECT	JOB	HIGHWAY
2-94 2-12	1685	09	099	US 90A
8-95	DIST	COUNTY		SHEET NO.
1-97	12	HARRIS		10
4-98				

DISCLAIMER: The use of this standard is governed by the "Texas Engineering Practice Act". No warranty of any kind is made by TxDOT for any purpose whatsoever. TxDOT assumes no responsibility for the conversion of this standard to other formats or for incorrect results or damages resulting from its use.

CHANNELIZING DEVICES FOR URBAN ROADWAY TYPE PROJECT

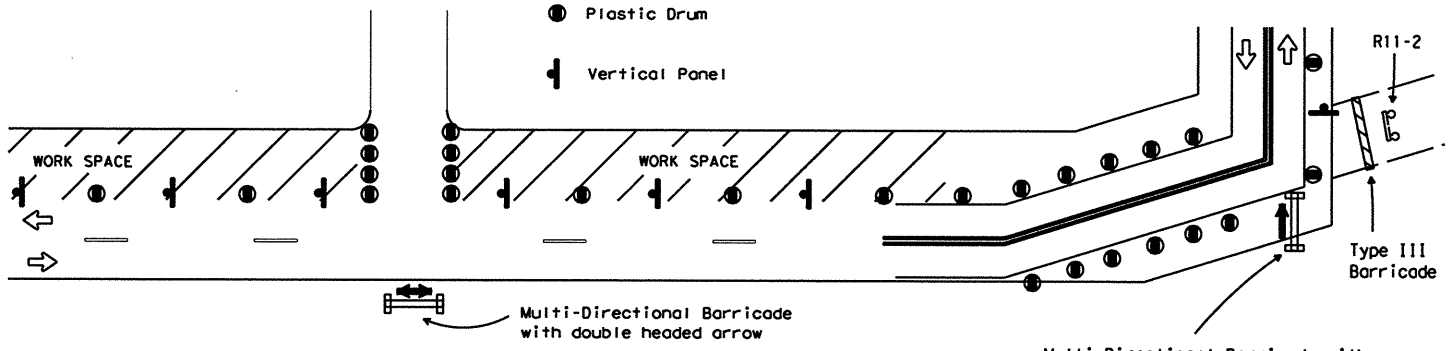

For spacing between devices, see BC(8). Use self-righting supports in areas where there is a high potential for channelizing devices to be struck.

MULTI-DIRECTIONAL BARRICADE

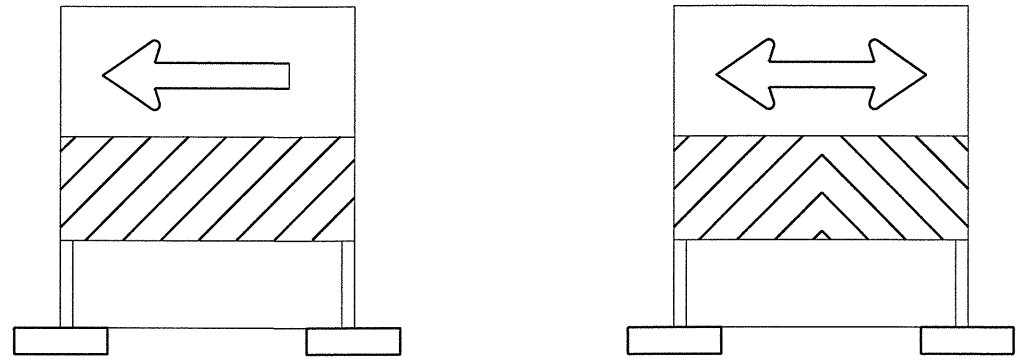

Single Headed Arrow

Double Headed Arrow

1. Multi-directional barricade shall not be used for lane closures.
2. May be used for sharp changes in alignment, or across roadway from stem of "T" intersection.
3. Typically used for Intermediate Term Stationary, Short Term Stationary or Short Duration work zone operations.
4. See the CWZTCD List for approved designs.

BARRIER DELINEATION WITH SAFETY GLARE FENCE

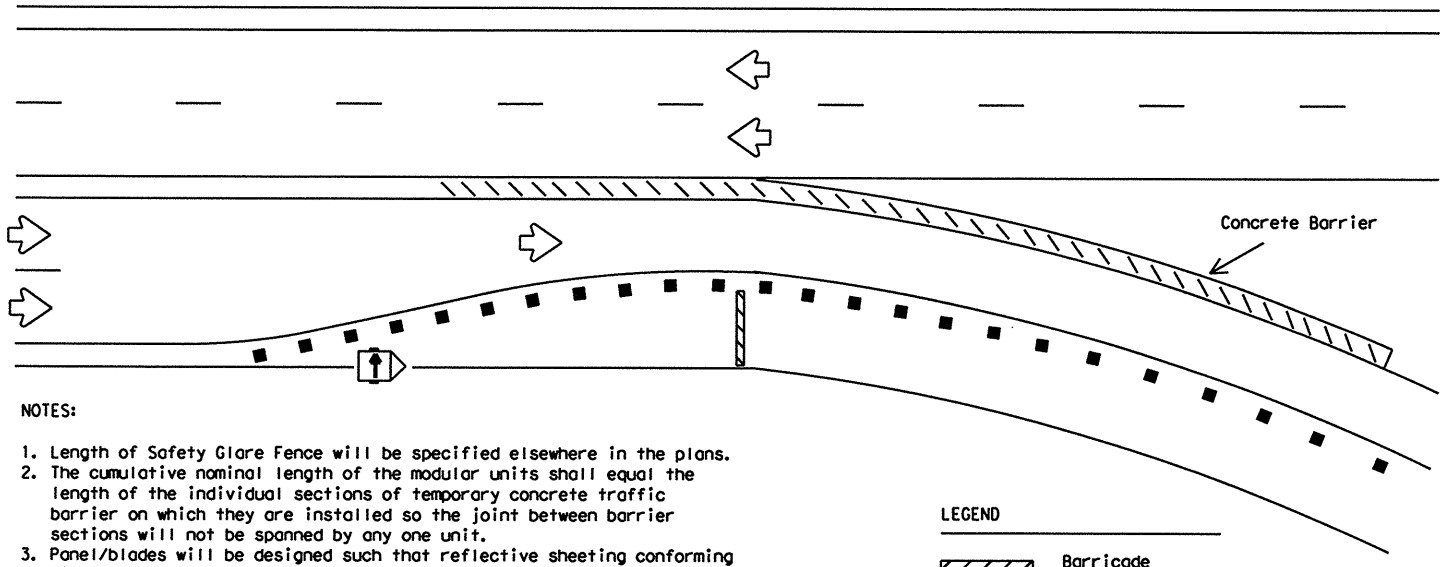

NOTES:

1. Length of Safety Glare Fence will be specified elsewhere in the plans.
2. The cumulative nominal length of the modular units shall equal the length of the individual sections of temporary concrete traffic barrier on which they are installed so the joint between barrier sections will not be spanned by any one unit.
3. Panel/blades will be designed such that reflective sheeting conforming with Departmental Material Specification DMS-8300, Flat Surface Reflective Sheeting, Type C (High Specific Intensity), minimum size of 2 inches by 12 inches can be attached to the edge of the panel/blade. The sheeting shall be attached to one panel/blade per section of concrete barrier not to exceed a spacing of 30 feet. Barrier reflectors are not necessary when panel/blades are installed.
4. Moduler Glare Screens for head light barrier shall meet the requirements of DMS-8610.

LEGEND

- Barricade
- Channelizing devices
- Trailer mounted flashing arrow panel
- Safety glare fence

USAGE OF CW1-6, ECW1-6a AND CW1-8 SIGNS

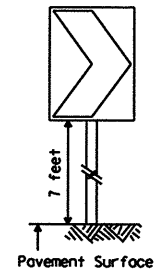

CW1-8

The CHEVRON sign (CW1-8) may be used to replace roadside delineation on curves or used in transitions or tapers.

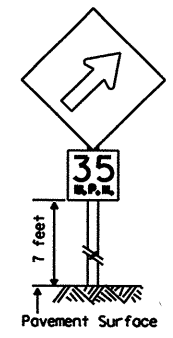

ECW1-6a

An UPWARD SLOPING ARROW sign (ECW1-6a) is intended to be used to indicate the beginning of a curve or transition. It should be preceded with an appropriate curve sign when needed, and should not be used throughout the curve or transition. Advisory speed plaque is optional.

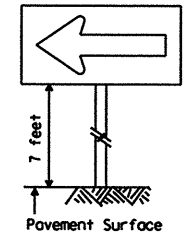

CW1-6

A LARGE ARROW sign (CW1-6) is intended to be used to give notice of a sharp change in alignment (turn) in the direction of travel. It should be preceded with an appropriate advance construction warning turn sign.

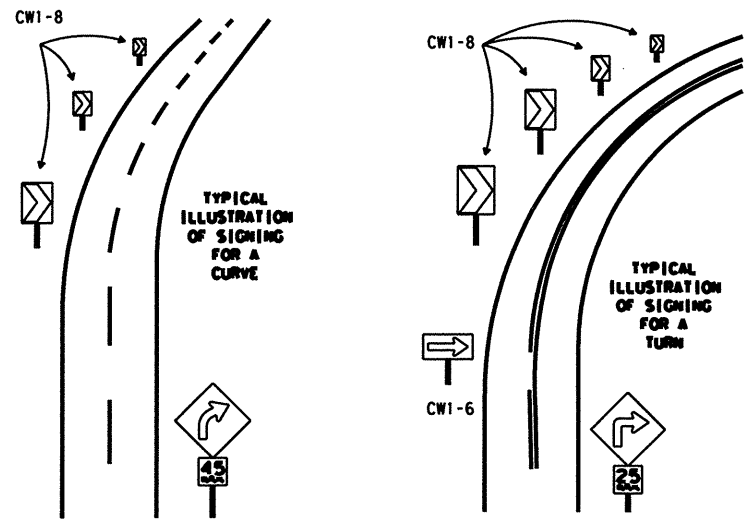

NOTES:

1. CW1-6, ECW1-6a & CW1-8 signs shall be mounted on fixed supports.
2. Chevrons, when used, shall be erected on the outside of a sharp curve or turn, or on the far side of an intersection. They shall be in line with and at right angles to approaching traffic. Spacing should be such that the motorist always has three in view, until the change in alignment eliminates its need.
3. For two-way traffic, use same arrangement of signs on outside of curve for each direction of travel.
4. Appropriate advance warning CURVE or TURN sign with Advisory Speed plaque should be used when needed.

Only pre-qualified products shall be used. A copy of the "Compliant Work Zone Traffic Control Devices List" (CWZTCD) describes pre-qualified products and their sources and may be obtained by contacting:

Standards Engineer
Traffic Operations Division - TE
Texas Department of Transportation
125 East 11th Street
Austin, Texas 78701-2483
Phone (512) 416-3120
Fax (512) 416-3299

Instructions to locate the "CWZTCD" on TxDOT website are:

Start at website - www.dot.state.tx.us
Click on "About TxDOT",
Click on "Organizational Chart",
Click on Traffic Operations Box,
Click on "Compliant Work Zone Traffic Control Devices",
Click on "View PDF".
This site is printable.

PREQUALIFICATION PROCEDURES ARE OBTAINED FROM:

CONSTRUCTION DIVISION-MATERIALS AND TESTS SECTION
TEXAS DEPARTMENT OF TRANSPORTATION (TxDOT)
125 EAST 11th STREET
AUSTIN, TX 78701-2483

DEPARTMENTAL MATERIAL SPECIFICATIONS

FLAT SURFACE REFLECTIVE SHEETING	DMS-8300
DELINEATORS AND OBJECT MARKERS	DMS-8600
MODULER GLARE SCREENS	DMS-8610

COLOR	USAGE	SIGN SHEETING
ORANGE	BACKGROUND	TYPE E (FLUORESCENT PRISMATIC)
WHITE	BACKGROUND	TYPE C (HIGH SPECIFIC INTENSITY)
BLACK	LEGEND & BORDERS	VINYL NON-REFLECTIVE SHEETING

REFER TO THE BC SHEETS FOR SHEETING REQUIREMENT ON CHANNELIZING DEVICES.

The five categories of work duration and their time at a location shall be:

A. Long-term stationary is work that occupies a location more than 3 days.

B. Intermediate-term stationary is work that occupies a location more than one daylight period up to 3 days, or nighttime work lasting more than 1 hour.

C. Short-term stationary is daytime work that occupies a location for more than 1 hour, but less than 12 hours.

D. Short duration is work that occupies a location up to 1 hour.

E. Mobile is work that moves intermittently or continuously.

Texas Department of Transportation
Traffic Operations Division

TRAFFIC CONTROL PLAN TYPICAL DETAILS

WZ(TD)-03

© TxDOT February 1998

REVISIONS
4-98
3-03

DN: TXDOT	CK: TXDOT	DW: TXDOT	CK: TXDOT

CONT	SECT	JOB	HIGHWAY
0027	09	099	US 90A

DIST	COUNTY	SHEET NO.
12	HARRIS	11

DATE:
FILE:

DISCLAIMER: The use of this standard is governed by the "Texas Engineering Practice Act". No warranty of any kind is made by TxDOT for any purpose whatsoever. TxDOT assumes no responsibility for the conversion of this standard to other formats or for incorrect results or damages resulting from its use.

Barricade and Construction (BC) Standard Sheets General Notes:

1. The Barricade and Construction Standard Sheets (BC sheets) are intended to show typical examples for placement of temporary traffic control devices, construction pavement markings, and typical work zone signs. The information contained in these sheets meet or exceed the requirements shown in the "Texas Manual on Uniform Traffic Control Devices" (TMUTCD).
2. The development and design of the Traffic Control Plan (TCP) is the responsibility of the Engineer.
3. The Contractor may propose changes to the TCP that are signed and sealed by a licensed professional engineer for approval. The Engineer may develop, sign and seal Contractor proposed changes.
4. The Contractor is responsible for installing and maintaining the traffic control devices as shown in the plans. The Contractor may not move or change the approximate location of any device without the approval of the Engineer.
5. Geometric design of lane shifts and detours should, when possible, meet the applicable design criteria contained in manuals such as the American Association of State Highway and Transportation Officials (AASHTO), "A Policy on Geometric Design of Highways and Streets", the TxDOT "Roadway Design Manual" or engineering judgment.
6. When projects abut, the Engineer(s) may omit the END ROAD WORK, TRAFFIC FINES DOUBLE, and other advance warning signs if the signing would be redundant and the work areas appear continuous to the motorists. If the adjacent project is completed first, the Contractor shall erect the necessary warning signs as shown on these sheets, the TCP sheets or as directed by the Engineer. The BEGIN ROAD WORK NEXT X MILES sign shall be revised to show appropriate work zone distance.
7. The Engineer may require duplicate warning signs on the median side of divided highways where median width will permit and traffic volumes justify the signing.
8. All signs shall be constructed in accordance with the details found in the "Standard Highway Sign Designs for Texas," latest edition. Sign details not shown in this manual shall be shown in the plans or the Engineer shall provide a detail to the Contractor before the sign is manufactured.
9. The temporary traffic control devices shown in the illustrations of the BC sheets are examples. As necessary, the Engineer will determine the most appropriate traffic control devices to be used.
10. As shown on BC(2), the OBEY WARNING SIGNS STATE LAW sign and the WORK ZONE TRAFFIC FINES DOUBLE sign with plaque shall be erected in advance of the CSJ limits. The BEGIN ROAD WORK NEXT X MILES, CONTRACTOR and END ROAD WORK signs shall be erected at or near the CSJ limits.
11. Except for devices required by Note 10, traffic control devices should be in place only while work is actually in progress or a definite need exists.
12. The Engineer has the final decision on the location of all traffic control devices.
13. Inactive equipment and work vehicles, including workers' private vehicles must be parked away from travel lanes. They should be as close to the right-of-way line as possible, or located behind a barrier or guardrail, or as approved by the Engineer.

Worker Safety Apparel Notes:

1. Workers on foot who are exposed to traffic or to construction equipment within the right-of-way shall wear high-visibility safety apparel meeting the requirements of ISEA "American National Standard for High-Visibility Apparel" labeled as ANSI 107-2004 standard performance for Class 2 or 3 risk exposure. Class 3 garments should be considered for high traffic volume work areas or night time work.

Only pre-qualified products shall be used. The "Compliant Work Zone Traffic Control Devices List" (CWZTCD) describes prequalified products and their sources and may be found on-line at the web address given below or by contacting:

Texas Department of Transportation
Traffic Operations Division - TE
Phone (512) 416-3134

WEB ADDRESSES FOR REFERENCED DOCUMENTS

Compliant Work Zone Traffic Control Devices List (CWZTCD)
http://www.txdot.gov/publications/traffic.htm

Texas Manual on Uniform Traffic Control Devices (TMUTCD)
http://www.txdot.gov/publications/traffic.htm

Standard Highway Sign Designs for Texas (SHSD)
http://www.txdot.gov/publications/traffic.htm

Traffic Engineering Standard Sheets
http://www.txdot.gov/business/disclaim.htm

Material Producer List
http://www.txdot.gov/business/producer-list.htm

Departmental Material Specifications (DMS)
http://www.txdot.gov/services/construction/material-specifications/

Roadway Design Manual
http://www.txdot.gov/services/general-services/manuals.htm

Texas Department of Transportation
Traffic Operations Division

BARRICADE AND CONSTRUCTION GENERAL NOTES AND REQUIREMENTS

1 of 12 BC(1)-07

© TxDOT 11-4-02	DN: TXDOT	CK: TXDOT	DW: TXDOT	CK: TXDOT
REVISIONS	CONT	SECT	JOB	HIGHWAY
4-03	0027	09	099	US 90A
9-07	DIST	COUNTY		SHEET NO.
	12	HARRIS		12

DATE:
FILE:

DISCLAIMER: The use of this standard is governed by the "Texas Engineering Practice Act". No warranty of any kind is made by TxDOT for any purpose whatsoever. TxDOT assumes no responsibility for the conversion of this standard to other formats or for incorrect results or damages resulting from its use.

DATE:
FILE:

TYPICAL LOCATION OF CROSSROAD SIGNS

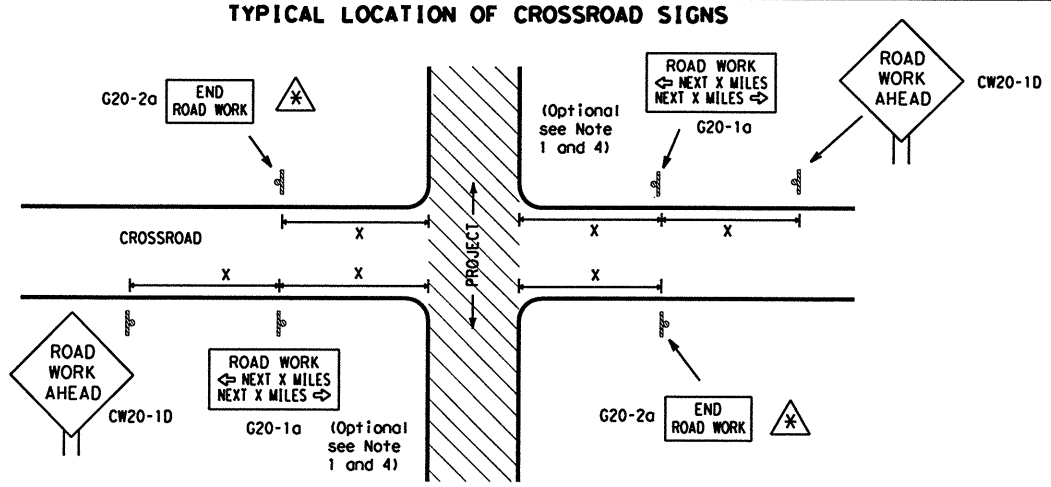

⚠ May be mounted on back of CW20-1D sign with approval of engineer. (See note 2 below)

1. The typical minimum signing on a crossroad approach should be a CW20-1D ROAD WORK AHEAD sign and a G20-2a END ROAD WORK sign, unless noted otherwise in plans.
2. The Engineer may use the reduced size 36" x 36" ROAD WORK AHEAD (CW20-1D) sign mounted back to back with the reduced size 36" x 18" END ROAD WORK (G20-2a) sign on low volume crossroads (see Note 4 under "Typical Construction Warning Sign Size and Spacing"). See the "Standard Highway Sign Designs for Texas" manual for sign details. The Engineer may omit the advance warning signs on low volume crossroads. The Engineer will determine whether a road is low volume. This information shall be shown in the plans.
3. Based on existing field conditions, the Engineer/Inspector may require additional signs such as FLAGGER AHEAD, LOOSE GRAVEL, or other appropriate signs. When additional signs are required, these signs will be considered part of the minimum requirements. The Engineer/Inspector will determine the proper location and spacing of any sign not shown on the BC sheets, Traffic Control Plan sheets or the Work Zone Standard Sheets.
4. The G20-1a sign shall be required at high volume crossroads to advise motorists of the length of construction in either direction from the intersection. The Engineer will determine whether a roadway is considered high volume.
5. Additional traffic control devices may be shown elsewhere in the plans for higher volume crossroads.
6. When work occurs in the intersection area, appropriate traffic control devices, as shown elsewhere in the plans or as determined by the Engineer/Inspector, shall be in place.

T-INTERSECTION

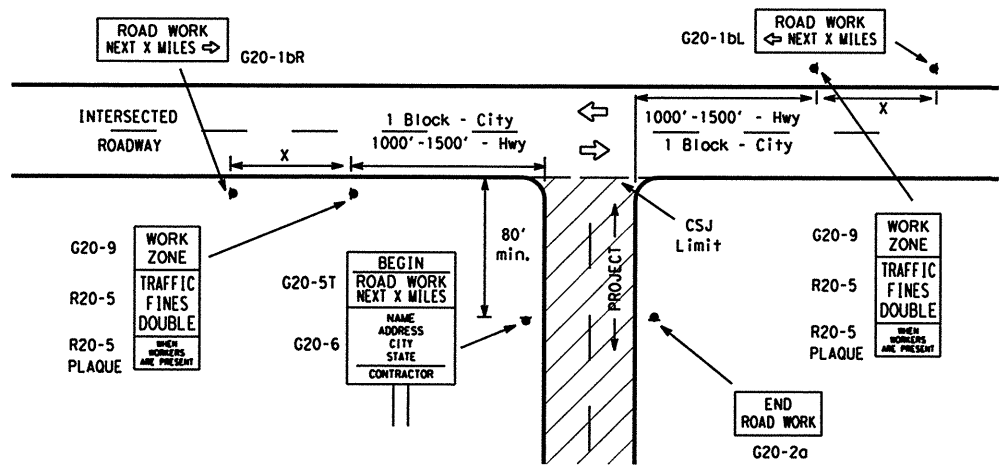

CSJ LIMITS AT T-INTERSECTION

1. The Engineer will determine the types and location of any additional traffic control devices, such as a flagger and accompanying signs, or other signs, that should be used when work is being performed at or near an intersection.
2. If construction closes the road at a T-intersection the Contractor shall place the G20-6 "Contractor Name" sign behind the Type III Barricades for the road closure (see BC(10) also). The G20-1bL and G20-1bR signs shall be replaced by the detour signing called for in the plans.

TYPICAL CONSTRUCTION WARNING SIGN SIZE AND SPACING [1,5,6]

SIZE

Sign Number or Series	Conventional Road	Expressway/ Freeway
CW20 [4], CW21, CW22, CW23, CW25	48" x 48"	48" x 48"
CW1, CW2, CW7, CW8, CW9, CW11, CW14	36" x 36"	48" x 48"
CW3, CW4, CW5, CW6, CW8-3, CW10, CW12	48" x 48"	48" x 48"

SPACING

Posted Speed	Sign Spacing "X" △
MPH	Feet (Apprx.)
30	120
35	160
40	240
45	320
50	400
55	500 [2]
60	600 [2]
65	700 [2]
70	800 [2]
75	900 [2]
80	1000 [2]
*	* [3]

* For typical sign spacings on divided highways, expressways and freeways, see Part 6 of the "Texas Manual on Uniform Traffic Control Devices" (TMUTCD) typical application diagrams or TCP Standard Sheets.

△ Minimum distance from work area to first Advance Warning sign nearest the work area and/or distance between each additional sign.

General Notes:

1. Special or larger size signs may be used as necessary.
2. Distance between signs should be increased as required to have 1500 feet advance warning.
3. Distance between signs should be increased as required to have ½ mile or more advance warning.
4. 36" x 36" ROAD WORK AHEAD (CW20-1D) signs may be used on low volume crossroads at the discretion of the Engineer. See Note 2 under "Typical Location of Crossroad Signs".
5. Only diamond shaped warning sign sizes are indicated.
6. See sign size listing in "TMUTCD", Sign Appendix or the "Standard Highway Sign Designs for Texas" manual for complete list of available sign design sizes.

WORK AREAS IN MULTIPLE LOCATIONS WITHIN CSJ LIMITS

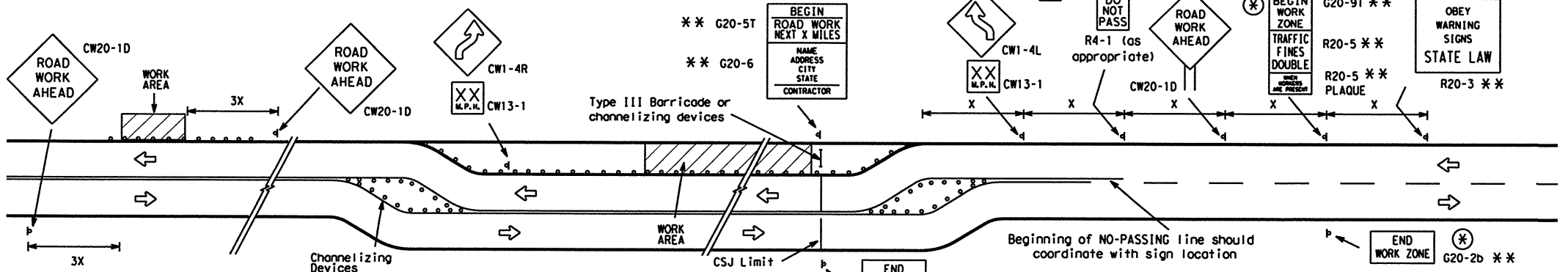

When extended distances occur between minimal work areas, the Engineer/Inspector should ensure additional Road Work Ahead (CW20-1D) signs are placed in advance of these work areas to remind drivers they are still within the project limits. See the applicable TCP sheets for exact location and spacing of signs and channelizing devices.

SAMPLE LAYOUT OF SIGNING FOR WORK BEGINNING AT THE CSJ LIMITS

SAMPLE LAYOUT OF SIGNING FOR WORK BEGINNING DOWNSTREAM OF THE CSJ LIMITS

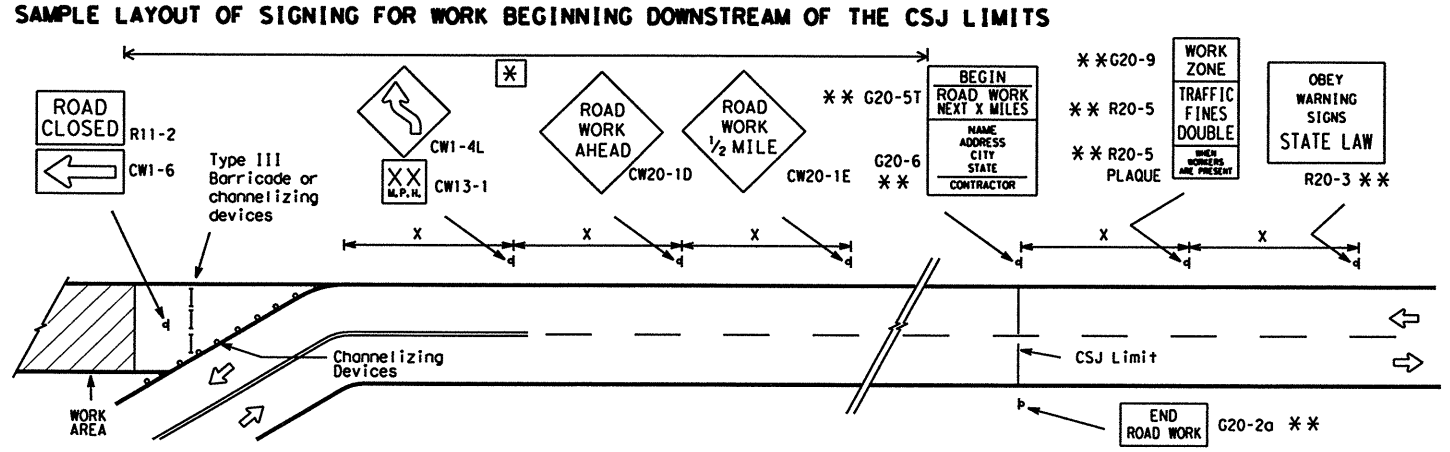

NOTES

The Contractor shall determine the appropriate distance to be placed on the G20-1 series signs and G20-5T sign for each specific project. This distance shall replace the "X" and shall be rounded to the nearest whole mile with the approval of the Engineer. No decimals shall be used.

⊛ The G20-9T and G20-2b shall be used when advance signs are required outside the CSJ Limits. They inform the motorist of entering or leaving a work zone where traffic fines may double if workers are present.

** Required CSJ Limit signing. See Note 10 on BC(1).

[*] Area for placement of "ROAD WORK AHEAD" sign and other signs or devices as called for on the Traffic Control Plan.

LEGEND

- ⌀ Sign
- O O Channelizing Devices
- I Type III Barricade
- X See Typical Construction Warning Sign Size and Spacing chart or the TMUTCD for sign spacing requirements.



R20-3
Legend/Border - Black
Background - White

Texas Department of Transportation
Traffic Operations Division

BARRICADE AND CONSTRUCTION PROJECT LIMIT STANDARD

2 of 12 BC(2)-07

©TxDOT 11-4-02	DN: TXDOT	CK: TXDOT	DW: TXDOT	CK: TXDOT
9-07 REVISIONS	CONT	SECT	JOB	HIGHWAY
	0027	09	099	US 90A
	DIST	COUNTY		SHEET NO.
	12	HARRIS		13

TYPICAL APPLICATION OF WORK ZONE SPEED LIMIT SIGNS

Work zone speed limits shall be regulatory, established in accordance with the "Procedures for Establishing Speed Zones," and approved by the Texas Transportation Commission, or by City Ordinance when within Incorporated City Limits.

Reduced speeds should only be posted in the vicinity of work activity and not throughout the entire project.

Regulatory work zone speed signs (R2-1) shall be removed or covered during periods when they are not needed.

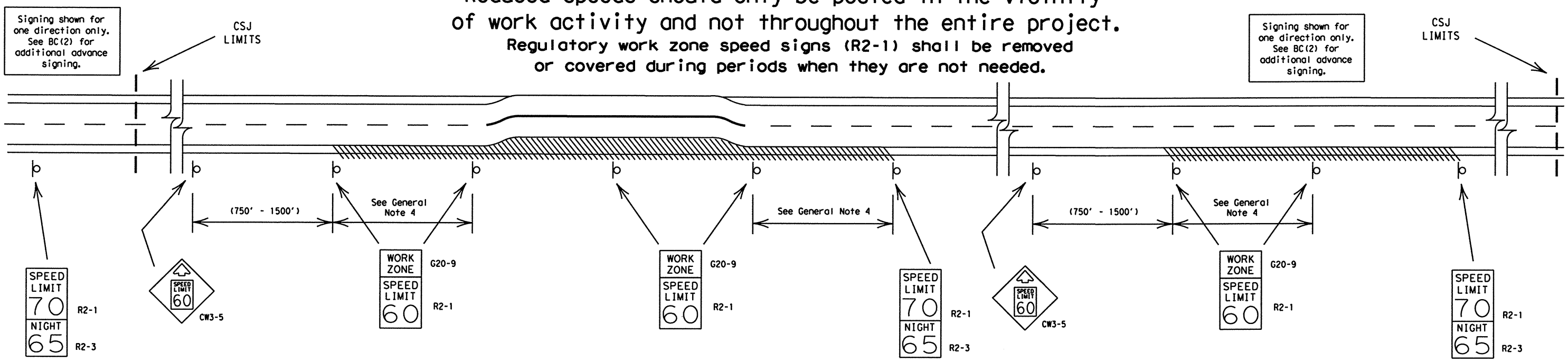

GUIDANCE FOR USE:

LONG/INTERMEDIATE TERM WORK ZONE SPEED LIMITS

This type of work zone speed limit should be included on the design of the traffic control plans when restricted geometrics with a lower design speed are present in the work zone and modification of the geometrics to a higher design speed is not feasible.

Long/Intermediate Term Work Zone Speed Limit signs, when approved as described above, should be posted and visible to the motorist when work activity is present. Work activity may also be defined as a change in the roadway that requires a reduced speed for motorists to safely negotiate the work area, including:

a) rough road or damaged pavement surface
b) substantial alteration of roadway geometrics (diversions)
c) construction detours
d) grade
e) width
f) other conditions readily apparent to the driver

As long as any of these conditions exist, the work zone speed limit signs should remain in place.

SHORT TERM WORK ZONE SPEED LIMITS

This type of work zone speed limit should be included on the design of the traffic control plans when workers or equipment are not behind concrete barrier, when work activity is within 15 feet of pavement edge or actually on the pavement.

Short Term Work Zone Speed Limit signs should be posted and visible to the motorists only when work activity is present. When work activity is not present, signs shall be removed or covered.
(See Removing or Covering on BC(4)).

GENERAL NOTES:

1. Regulatory work zone speed limits should be used only for sections of construction projects where speed control is of major importance.
2. Regulatory work zone speed limit signs shall be placed on supports at a 7 foot minimum mounting height.
3. Speed zone signs are illustrated for one direction of travel and are normally posted for each direction of travel.
4. Frequency of work zone speed limit signs should be:
   40 mph and greater 0.2 to 2 miles
   35 mph and less 0.2 to 1 mile
5. Regulatory speed limit signs shall have black legend and border on a white reflective background (See "Reflective Sheeting" on BC(4)).
6. Fabrication, errection and maintenance of the CW3-5 sign, G20-9 plaque and the R2-1 and R2-3 signs shall not be paid for directly, but shall be considered subsidiary to Item 502.
7. Turning signs from view, laying signs over or down will not be allowed, unless otherwise noted.
8. Techniques that may help reduce traffic speeds include but are not limited to:
   A. Law enforcement.
   B. Flagger stationed next to sign.
   C. Portable changeable message sign (PCMS).
   D. Low-power (drone) radar transmitter.
   E. Speed monitor trailers or signs.
9. Speeds shown on details above are for illustration only.
   Work Zone Speed Limits should only be posted as approved for each project.

Texas Department of Transportation
Traffic Operations Division

BARRICADE AND CONSTRUCTION WORK ZONE SPEED LIMIT STANDARD

3 of 12 **BC(3)-07**

©TxDOT 11-4-02

DN: TXDOT	CK: TXDOT	DW: TXDOT	CK: TXDOT
9-07 REVISIONS			

CONT	SECT	JOB	HIGHWAY
0027	09	099	US 90A

DIST	COUNTY	SHEET NO.
12	HARRIS	14

DISCLAIMER: The use of this standard is governed by the "Texas Engineering Practice Act". No warranty of any kind is made by TxDOT for any purpose whatsoever. TxDOT assumes no responsibility for the conversion of this standard to other formats or for incorrect results or damages resulting from its use.

DATE:
FILE:

DISCLAIMER: The use of this standard is governed by the "Texas Engineering Practice Act". No warranty of any kind is made by TxDOT for any purpose whatsoever. TxDOT assumes no responsibility for the conversion of this standard to other formats or for incorrect results or damages resulting from its use.

DATE:
FILE:

TYPICAL MINIMUM CLEARANCES FOR LONG TERM AND INTERMEDIATE TERM SIGNS

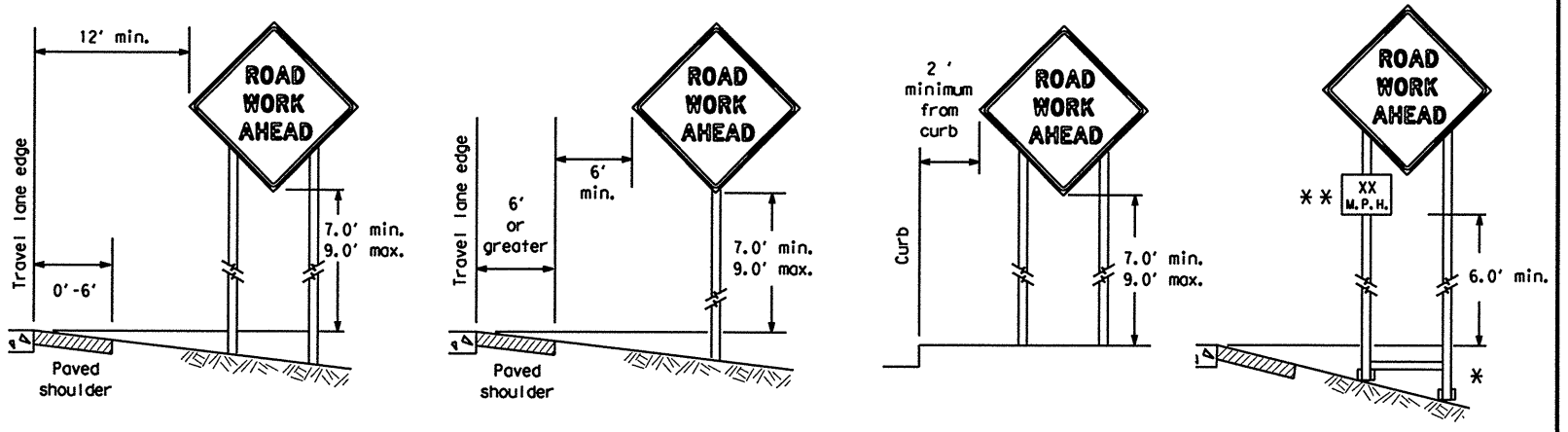

* When placing skid supports on unlevel ground, the leg post lengths must be adjusted so the sign appears straight and plumb. Objects shall NOT be placed under skids as a means of leveling.

** When plaques are placed on dual-leg supports, they should be attached to the upright nearest the travel lane. Supplemental plaques (advisory or distance) should not cover the surface of the parent sign.

ATTACHMENT FOR SIGN SUPPORTS

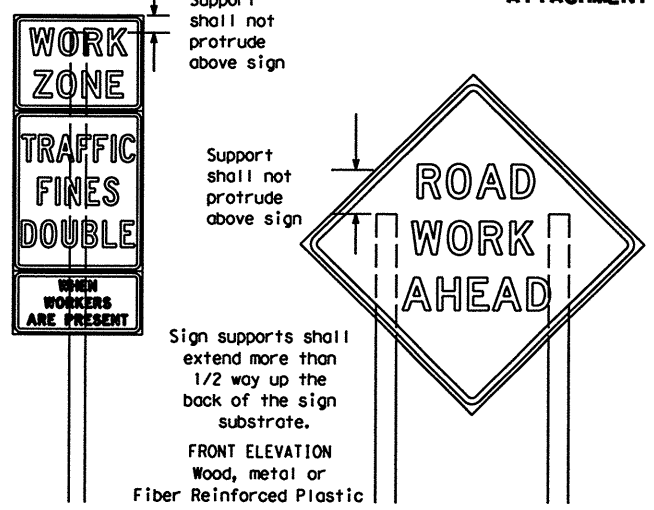

Splicing embedded perforated square metal tubing in order to extend post height will only be allowed when the splice is made using four bolts, two above and two below the spice point. Splice must be located entirely behind the sign substrate, not near the base of the support. Splice insert lengths should be at least 5 times nominal post size, centered on the splice and of at least the same guage material.

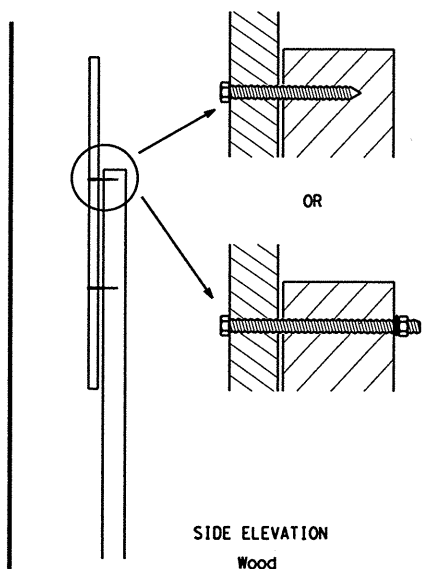

Attachment to wooden supports will be by bolts and nuts or screws. Use TxDOT's or manufacturer's recommended procedures for attaching sign substrates to other types of sign supports

Nails will NOT be allowed.

Each sign shall be attached directly to the sign support. Multiple signs shall not be joined or spliced by any means. Wood supports shall not be extended or repaired by splicing or other means.

STOP/SLOW PADDLES

1. STOP/SLOW paddles are the primary method to control traffic by flaggers. The STOP/SLOW paddle size should be 24" x 24" as detailed below.
2. When used at night, the STOP/SLOW paddle shall be retroreflectorized.
3. STOP/SLOW paddles may be attached to a staff with a minimum length of 6' to the bottom of the sign.
4. Any lights incorporated into the STOP or SLOW paddle faces shall only be as specifically described in Section 6E.03 Hand Signaling Devices in the TMUTCD.

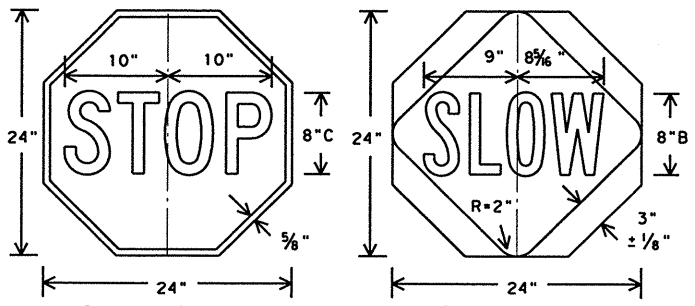

CONTRACTOR REQUIREMENTS FOR MAINTAINING PERMANENT SIGNS WITHIN THE PROJECT LIMITS

1. Permanent signs are used to give notice of traffic laws or regulations, call attention to conditions that are potentially hazardous to traffic operations, show route designations, destinations, directions, distances, services, points of interest, and other geographical, recreational, or cultural information. Drivers proceeding through a work zone need the same, if not better route guidance as normally installed on a roadway without construction.
2. When permanent regulatory or warning signs conflict with work zone conditions, remove or cover the permanent signs until the permanent sign message matches the roadway condition.
3. When existing permanent signs are moved and relocated due to construction purposes, they shall be visible to motorists at all times.
4. If existing signs are to be relocated on their original supports, they shall be installed on crashworthy bases as shown on the SMD Standard sheets. The signs shall meet the required mounting heights shown on the BC Sheets or the SMD Standards. This work should be paid for under the appropriate pay item for relocating existing signs.
5. If permanent signs are to be removed and relocated using temporary supports, the Contractor shall use crashworthy supports as shown on the BC sheets or the CWZTCD. The signs shall meet the required mounting heights shown on the BC Sheets or the SMD Standards during construction. This work should be paid for under the appropriate pay item for relocating existing signs.
6. Any sign or traffic control device that is struck or damaged by the Contractor or his/her construction equipment shall be replaced as soon as possible by the Contractor to ensure proper guidance for the motorists. This will be subsidiary to Item 502.

GENERAL NOTES FOR WORK ZONE SIGNS

1. Contractor shall install and maintain signs in a straight and plumb condition and/or as directed by the Engineer.
2. Wooden sign posts shall be painted white.
3. Barricades shall NOT be used as sign supports.
4. Nails shall NOT be used to attach signs to any support.
5. All signs shall be installed in accordance with the plans or as directed by the Engineer. Signs shall be used to regulate, warn, and guide the traveling public safely through the work zone.
6. The Contractor may furnish either the sign design shown in the plans or in the "Standard Highway Sign Designs for Texas" (SHSD). The Engineer/Inspector may require the Contractor to furnish other work zone signs that are shown in the TMUTCD but may have been omitted from the plans. Any variation in the plans shall be documented by written agreement between the Engineer and the Contractor's Responsible Person. All changes must be documented in writing before being implemented. This can include documenting the changes in the Inspector's TxDOT diary and having both the Inspector and Contractor initial and date the agreed upon changes.
7. The Contractor shall furnish sign supports listed in the "Compliant Work Zone Traffic Control Device List" (CWZTCD). The Contractor shall install the sign support in accordance with the manufacturer's recommendations. If there is a question regarding installation procedures, the Contractor shall furnish the Engineer a copy of the manufacturer's installation recommendations so the Engineer can verify the correct procedures are being followed.
8. The Contractor is responsible for installing signs on approved supports and replacing signs with damaged or cracked substrates and/or damaged or marred reflective sheeting as directed by the Engineer/Inspector.
9. Identification markings may be shown only on the back of the sign substrate. The maximum height of letters and/or company logos used for identification shall be 1 inch.
10. The Contractor shall replace damaged wood posts. New or damaged wood sign posts shall not be spliced.

DURATION OF WORK (as defined by the "Texas Manual on Uniform Traffic Control Devices" Part 6)

1. The types of sign supports, sign mounting height, the size of signs, and the type of sign substrates can vary based on the type of work being performed. The Engineer is responsible for selecting the appropriate size sign for the type of work being performed. The Contractor is responsible for ensuring the sign support, sign mounting height and substrate meets manufacturer's recommendations in regard to crashworthiness and duration of work requirements.
   a. Long-term stationary - work that occupies a location more than 3 days.
   b. Intermediate-term stationary - work that occupies a location more than one daylight period up to 3 days, or nighttime work lasting more than one hour.
   c. Short-term stationary - daytime work that occupies a location for more than 1 hour in a single daylight period.
   d. Short, duration - work that occupies a location up to 1 hour.
   e. Mobile - work that moves continuously or intermittently (stopping for up to approximately 15 minutes.)

SIGN MOUNTING HEIGHT

1. The bottom of Long-term/Intermediate-term signs shall be at least 7 feet, but not more than 9 feet, above the paved surface, except as shown for supplemental plaques mounted below other signs.
2. The bottom of Short-term/Short Duration signs shall be a minimum of 1 foot above the pavement surface but no more than 2 feet above the ground.
3. Long-term/Intermediate-term Signs may be used in lieu of Short-term/Short Duration signing.
4. Short-term/Short Duration signs shall be used only during daylight and shall be removed at the end of the workday. or raised to appropriate Long-term/Intermediate sign height.
5. Regulatory signs shall be mounted at least 7 feet, but not more than 9 feet, above the paved surface regardless of work duration.

SIZE OF SIGNS

1. The Engineer may allow the use of smaller size construction warning signs on secondary roads or city streets where speeds are low if the sign size is listed as an option on the "Typical Construction Warning Sign Size and Spacing" chart shown on BC(2).
2. The Contractor shall furnish the sign sizes shown in plans, the BC Sheets, the TCP sheets or as directed by the Engineer.

SIGN SUBSTRATES

1. The Contractor shall ensure the sign substrate is installed in accordance with the manufacturer's recommendations for the type of sign support that is being used. The CWZTCD lists each substrate that can be used on the different types and models of sign supports.
2. "Mesh" type materials are NOT an approved sign substrate, regardless of the tightness of the weave.
3. All wooden individual sign panels fabricated from 2 or more pieces shall have one or more plywood cleat, 1/2" thick by 6" wide, fastened to the back of the sign and extending fully across the sign. The cleat shall be attached to the back of the sign using wood screws that do not penetrate the face of the sign panel. The screws shall be placed on both sides of the splice and spaced at 6" centers. The Engineer may approve other methods of splicing the sign face.

REFLECTIVE SHEETING

1. All signs shall be retroreflective and constructed of sheeting meeting the color and retro-reflectivity requirements of DMS-8300 for rigid signs or DMS-8310 for roll-up signs. The web address for DMS specifications is shown on BC(1).
2. White sheeting, meeting the requirements of DMS-8300 Type C (High Specific Intensity), shall be used for signs with a white background.
3. Orange sheeting, meeting the requirements of DMS-8300 Type E (Fluorescent Prismatic), shall be used for rigid signs with orange backgrounds.

SIGN LETTERS

1. All sign letters and numbers shall be clear, and open rounded type uppercase alphabet letters as approved by the Federal Highway Administration (FHWA) and as published in the "Standard Highway Sign Design for Texas" manual. Signs, letters and numbers shall be of first class workmanship in accordance with Department Standards and Specifications.

REMOVING OR COVERING

1. When sign messages may be confusing or do not apply, the signs shall be removed or completely covered.
2. Long-term stationary or intermediate stationary signs installed on square metal tubing may be turned away from traffic 90 degrees when the sign message is not applicable. This type of sign support meets the crashworthiness standards regardless of the direction of impact. This technique may not be used for signs installed in the median of divided highways or near any intersections where the sign may be seen from approaching traffic.
3. Signs installed on wooden skids shall not be turned at 90 degree angles to the roadway. These signs should be removed or completely covered when not required.
4. When signs are covered, the material used shall be opaque, such as heavy mil black plastic, or other materials which will cover the entire sign face and maintain their opaque properties under automobile headlights at night, without damaging the sign sheeting.
5. Burlap shall NOT be used to cover signs.
6. Duct tape or other adhesive material shall NOT be affixed to a sign face. These materials can damage the retroreflectivity of sheeting.
7. Signs and anchor stubs shall be removed and holes backfilled upon completion of work.

SIGN SUPPORT WEIGHTS

1. Where sign supports require the use of weights to keep from turning over, the use of sandbags with dry, cohesionless sand is recommended.
2. The sandbags will be tied shut to keep the sand from spilling and to maintain a constant weight.
3. Rock, concrete, iron, steel or other solid objects shall not be permitted for use as sign support weights.
4. Sandbags should weigh a minimum of 35 lbs and a maximum of 50 lbs.
5. Sandbags shall be made of a durable material that tears upon vehicular impact.
6. Rubber (such as tire inner tubes) shall NOT be used for sandbags.
7. Rubber ballasts designed for channelizing devices should not be used for ballast on portable sign supports. Sign supports designed and manufactured with rubber bases may be used when shown on the CWZTCD list.
8. Sandbags shall only be placed along or laid over the base supports of the traffic control device and shall not be suspended above ground level or hung with rope, wire, chains or other fasteners. Sandbags shall be placed along the length of the skids to weigh down the sign support.
9. Sandbags shall NOT be placed under the skid and shall not be used to level sign supports placed on slopes.

Texas Department of Transportation
Traffic Operations Division

BARRICADE AND CONSTRUCTION TEMPORARY SIGN NOTES STANDARD

4 of 12 BC(4)-07

© TxDOT 11-4-02

DN: TXDOT	CK: TXDOT	DW: TXDOT	CK: TXDOT
CONT	SECT	JOB	HIGHWAY
0027	09	099	US 90A
DIST	COUNTY		SHEET NO.
12	HARRIS		15

9-07 REVISIONS

DISCLAIMER: The use of this standard is governed by the "Texas Engineering Practice Act". No warranty of any kind is made for any purpose whatsoever. TxDOT assumes no responsibility for the conversion of this standard to other formats or for incorrect results or damages resulting from its use.

SKID MOUNTED WOOD SIGN SUPPORTS

LONG/INTERMEDIATE TERM STATIONARY - PORTABLE SKID MOUNTED SIGN SUPPORTS □

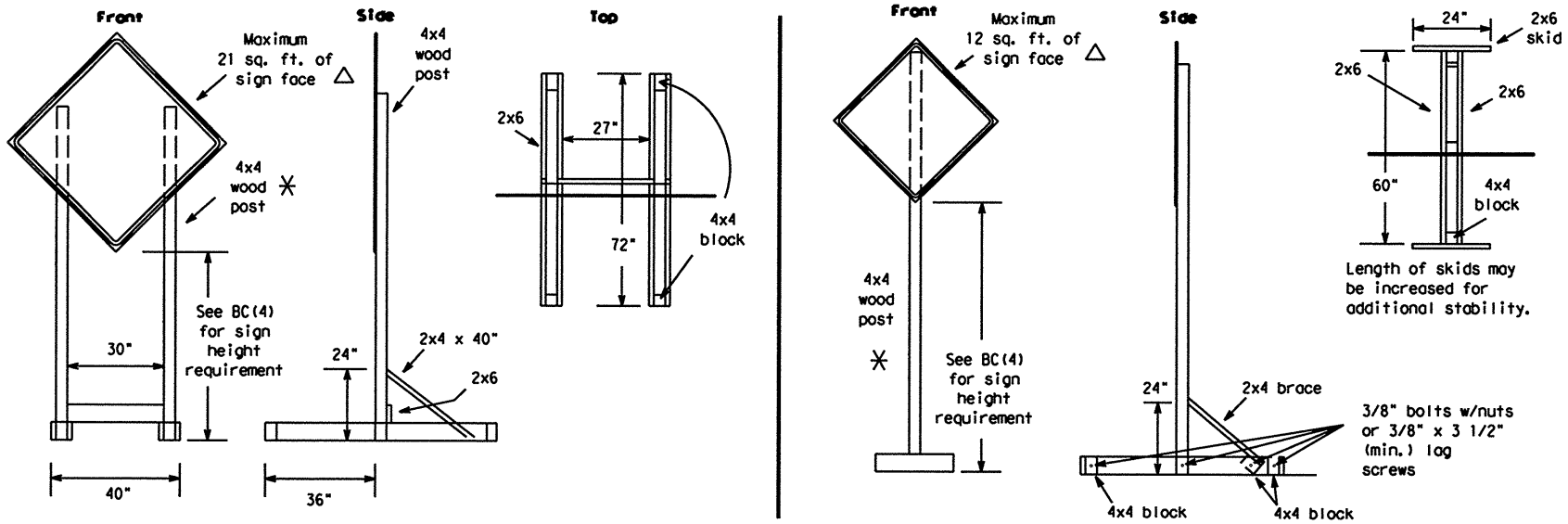

SKID MOUNTED PERFORATED SQUARE STEEL TUBING SIGN SUPPORTS

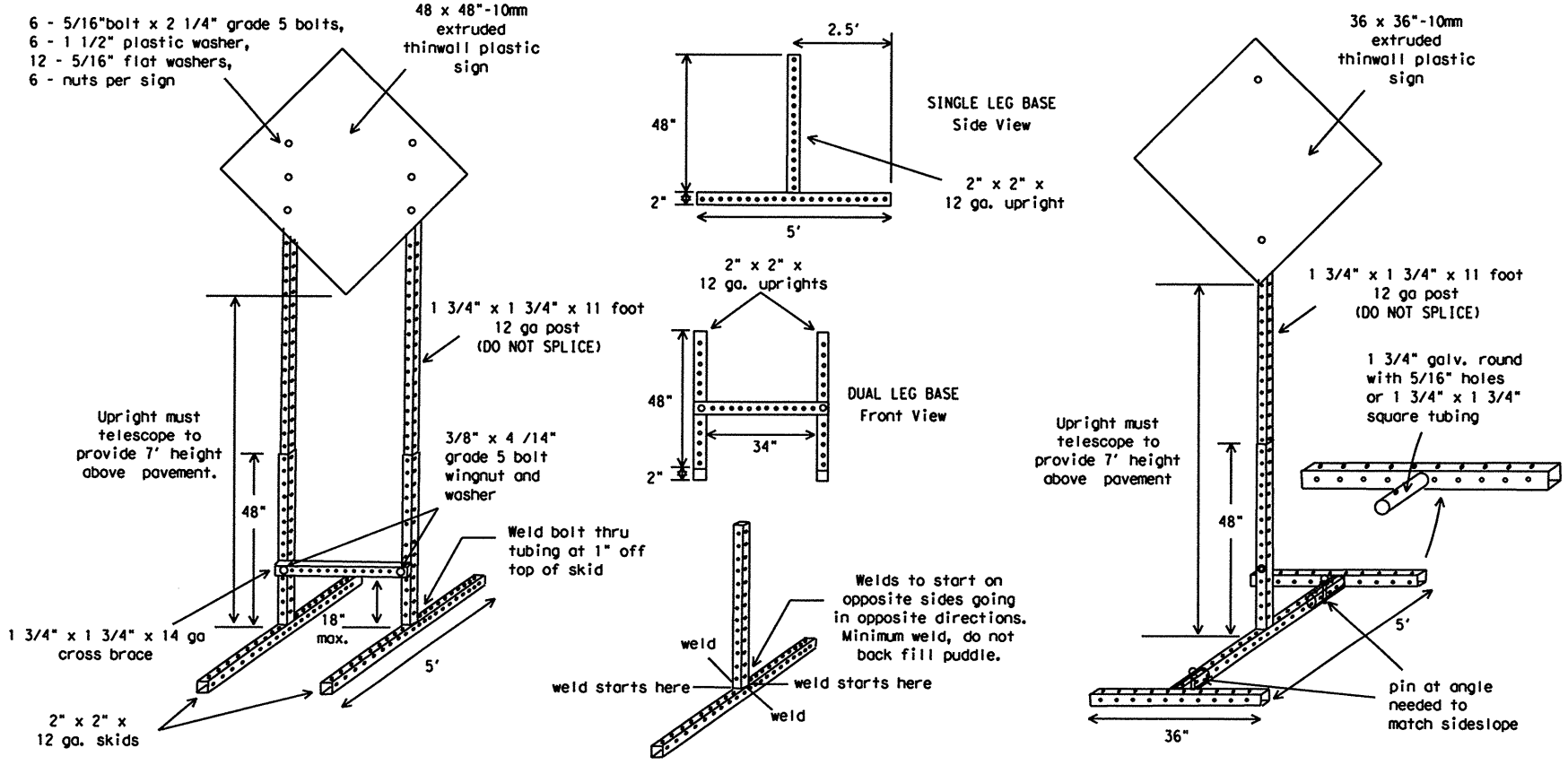

GROUND MOUNTED SIGN SUPPORTS

Refer to the CWZTCD and the manufacturer's installation procedure for each type sign support.
The maximum sign square footage shall adhere to the manufacturer's recommendation.
Two post installations can be used for larger signs.

PERFORATED SQUARE METAL TUBING

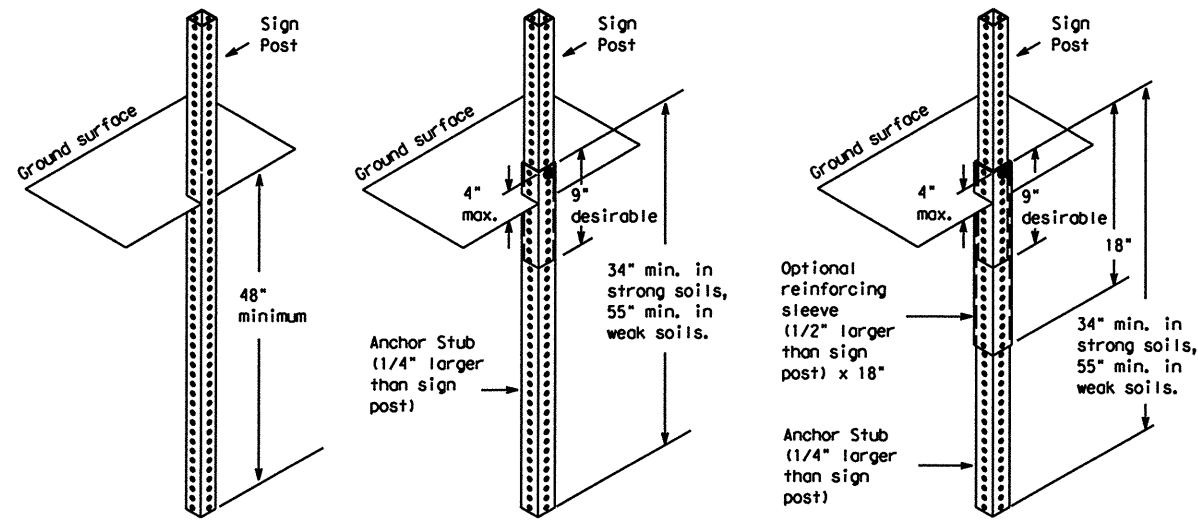

WING CHANNEL

Lap-splice/base bolted anchor

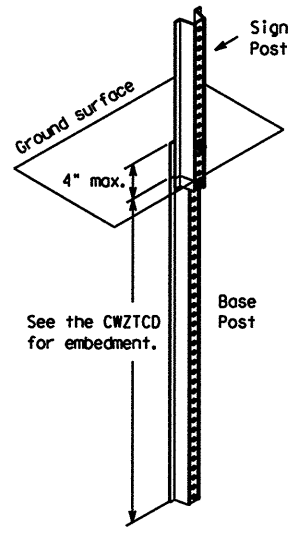

GENERAL NOTES

1. Nails may be used in the assembly of wooden sign supports, but 3/8" bolts with nuts or 3/8" x 3 1/2" lag screws must be used on every joint for final connection.
2. More details of approved Long/Intermediate and Short Term supports can be found on the CWZTCD list. See BC(1) for website location.
3. No more than 2 sign posts shall be placed within a 7 ft. circle, except for specific materials noted on the CWZTCD List.
4. When project is completed, all sign supports and foundations shall be removed from the project site. This will be considered subsidiary to Item 502.

□ See BC(4) for definition of "Work Duration."

✳ Wood sign posts MUST be one piece. Splicing will NOT be allowed. Posts shall be painted white.

△ See the CWZTCD for the type of sign substrate that can be used for each approved sign support.

WEDGE ANCHORS

Both steel and plastic Wedge Anchor Systems as shown on the SMD Standard Sheets may be used as temporary sign supports for signs up to 10 square feet of sign face. They may be set in concrete or in sturdy soils if approved by the Engineer. (See web address for "Traffic Engineering Standard Sheets" on BC(1)).

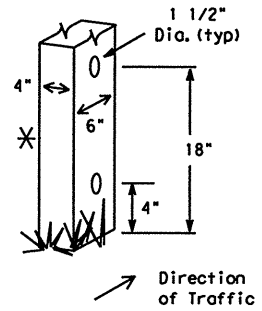

WOOD POST SYSTEM FOR GROUND MOUNTED SIGN SUPPORTS

Nominal Post Size	No. of Posts	Maximum Sq. feet of Sign Face	Minimum Soil Embedment	Drilled Hole(s) Required
4 x 4	1	12	36"	NO
4 x 4	2	21	36"	NO
4 x 6	1	21	36"	YES
4 x 6	2	36	36"	YES

Texas Department of Transportation
Traffic Operations Division

BARRICADE AND CONSTRUCTION TYPICAL SIGN SUPPORT STANDARD

5 of 12 BC(5)-07

©TxDOT 11-4-02	DN: TXDOT	CK: TXDOT	DW: TXDOT	CK: TXDOT
9-07 REVISIONS	CONT	SECT	JOB	HIGHWAY
	0027	09	099	US 90A
	DIST	COUNTY		SHEET NO.
	12	HARRIS		16

DATE:
FILE:

DISCLAIMER: The use of this standard is governed by the "Texas Engineering Practice Act". No warranty of any kind is made by TxDOT for any purpose whatsoever. TxDOT assumes no responsibility for the conversion of this standard to other formats or for incorrect results or damages resulting from its use.

DATE:
FILE:

PORTABLE CHANGEABLE MESSAGE SIGNS

1. The Engineer/Inspector shall approve all messages used on portable changeable message signs (PCMS).
2. Messages on PCMS should contain no more than 8 words (about four to eight characters per word), not including simple words such as "TO," "FOR," "AT," etc.
3. Messages should consist of a single phase, or two phases that alternate. Three-phase messages are not allowed. Each phase of the message should convey a single thought, and must be understood by itself.
4. Use the word "EXIT" to refer to an exit ramp on a freeway; i.e., "EXIT CLOSED." Do not use the term "RAMP."
5. Always use the route or interstate designation (IH, US, SH, FM) along with the number when referring to a roadway.
6. When in use the bottom of a stationary PCMS message panel should be a minimum 7 feet above the roadway, where possible.
7. The message term "WEEKEND" should be used only if the work is to start on Saturday morning and end by Sunday evening at midnight. Actual days and hours of work should be displayed on the PCMS if work is to begin on Friday evening and/or continue into Monday morning.
8. The Engineer/Inspector may select one of two options which are available for displaying a two-phase message on a PCMS. Each phase may be displayed for either four seconds each or for three seconds each.
9. Do not "flash" messages or words included in a message. The message should be steady burn or continuous while displayed.
10. Do not present redundant information on a two-phase message; i.e., keeping two lines of the message the same and changing the third line.
11. Do not use the word "Danger" in message.
12. Do not display the message "LANES SHIFT LEFT" or "LANES SHIFT RIGHT" on a PCMS. Drivers do not understand the message.
13. Do not display messages that scroll horizontally or vertically across the face of the sign.
14. The following table lists abbreviated words and two-word phrases that are acceptable for use on a PCMS. Both words in a phrase must be displayed together. Words or phrases not on this list should not be abbreviated.
15. PCMS character height should be at least 18 inches for trailer mounted units. They should be visible from at least 1/2 (.5) mile and the text should be legible from at least 720 feet. Truck mounted units must have a character height of 10 inches and must be legible from at least 400 feet.
16. Each line of text should be centered on the message board rather than left or right justified.
17. If disabled, the PCMS should default to an illegible display that will not alarm motorists and will only be used to alert workers that the PCMS has malfunctioned. A pattern such as a series of horizontal solid bars is appropriate.

Word or Phrase	Abb.	Word or Phrase	Abb.
Access Road	ACCS RD	Major	MAJ
Air Quality	AIR QLTY	Miles	MI
Alternate	ALT	Miles Per Hour	MPH
Avenue	AVE	Minor	MNR
Best Route	BEST RTE	Monday	MON
Boulevard	BLVD	Normal	NORM
Bridge	BRDG	North	N
Cannot	CANT	Northbound	(route) N
Center	CNTR	Parking	PKING
Construction Ahead	CONST AHEAD	Parking Lot	PRK LOT
Detour Route	DETOUR RTE	Road	RD
Do Not	DONT	Right Lane	RGT LN
East	E	Saturday	SAT
Eastbound	(route) E	Service Road	SERV RD
Emergency	EMER	Shoulder	SHLDR
Emergency Vehicle	EMER VEH	Slippery	SLIP
Entrance, Enter	ENT	South	S
Express Lanes	EXP LANE	Southbound	(route) S
Expressway	EXPWY	Speed	SPD
XXXX Feet	XXXX FT	Street	ST
Fog Ahead	FOG AHD	Sunday	SUN
Freeway	FRWY, FWY	Telephone	PHONE
Freeway Blocked	FWY BLKD	Temporary	TEMP
Friday	FRI	Thursday	THURS
Hazardous Driving	HAZ DRIVING	To Downtown	TO DWNTN
Hazardous Material	HAZMAT	Traffic	TRAF
High-Occupancy Vehicle	HOV	Travelers	TRVLRS
Highway	HWY	Tuesday	TUES
Hours	HR	Time Minutes	TIME MIN
Information	INFO	Upper Level	UPPR LVL
It Is	ITS	Vehicle	VEH
Junction	JCT	Warning	WARN
Left	LFT	Wednesday	WED
Left Lane	LFT LN	Weight Limit	WT LIMIT
Lane Closed	LN CLSD	West	W
Lower Level	LOWR LVL	Westbound	(route) W
Maintenance	MAINT	Wet Pavement	WET PVMT
		Will Not	WONT

Roadway designation # IH-number, US-number, SH-number, FM-number

WHEN NOT IN USE, REMOVE THE PCMS FROM THE RIGHT-OF-WAY OR PLACE THE PCMS BEHIND BARRIER OR GUARDRAIL WITH SIGN PANEL TURNED PARALLEL TO TRAFFIC

RECOMMENDED PHASES AND FORMATS FOR PCMS MESSAGES DURING ROADWORK ACTIVITIES

(The Engineer may approve other messages not specifically covered here.)

Phase 1: Condition Lists

Road/Lane/Ramp Closure List

- FREEWAY CLOSED X MILE
- FRONTAGE ROAD CLOSED
- ROAD CLOSED AT SH XXX
- SHOULDER CLOSED XXX FT
- ROAD CLSD AT FM XXXX
- RIGHT LN CLOSED XXX FT
- RIGHT X LANES CLOSED
- RIGHT X LANES OPEN
- CENTER LANE CLOSED
- DAYTIME LANE CLOSURES
- NIGHT LANE CLOSURES
- I-XX SOUTH EXIT CLOSED
- VARIOUS LANES CLOSED
- EXIT XXX CLOSED X MILE
- EXIT CLOSED
- RIGHT LN TO BE CLOSED
- MALL DRIVEWAY CLOSED
- X LANES CLOSED TUE - FRI
- XXXXXXXX BLVD CLOSED

Other Condition List

- ROADWORK XXX FT
- ROAD REPAIRS XXXX FT
- FLAGGER XXXX FT
- LANE NARROWS XXXX FT
- RIGHT LN NARROWS XXXX FT
- TWO-WAY TRAFFIC XX MILE
- MERGING TRAFFIC XXXX FT
- CONST TRAFFIC XXX FT
- LOOSE GRAVEL XXXX FT
- UNEVEN LANES XXXX FT
- DETOUR X MILE
- ROUGH ROAD XXXX FT
- ROADWORK PAST SH XXXX
- ROADWORK NEXT FRI-SUN
- BUMP XXXX FT
- US XXX EXIT X MILES
- TRAFFIC SIGNAL XXXX FT
- LANES SHIFT *

* LANES SHIFT in Phase 1 must be used with STAY IN LANE in Phase 2.

Application Guidelines

1. Only 1 or 2 phases are to be used on a PCMS.
2. The 1st phase (or both) should be selected from the "Road/Lane/Ramp Closure List" and the "Other Condition List".
3. A 2nd phase can be selected from the "Action to Take/Effect on Travel, Location, General Warning, or Advance Notice Phase Lists".
4. A Location Phase is necessary only if a distance or location is not included in the first phase selected.
5. If two PCMS are used in sequence, they must be separated by a minimum of 1000 ft. Each PCMS shall be limted to two phases, and should be understandable by themselves.
6. For advance notice, when the current date is within seven days of the actual work date, calendar days should be replaced with days of the week. Advance notification should typically be for no more than one week prior to the work

Phase 2: Possible Component Lists

Action to Take/Effect on Travel List

- MERGE RIGHT
- FORM X LINES RIGHT
- DETOUR NEXT X EXITS
- USE XXXXX RD EXIT
- USE EXIT XXX
- USE EXIT I-XX NORTH
- STAY ON US XXX SOUTH
- USE I-XX E TO I-XX N
- TRUCKS USE US XXX N
- WATCH FOR TRUCKS
- WATCH FOR TRUCKS
- EXPECT DELAYS
- EXPECT DELAYS
- PREPARE TO STOP
- REDUCE SPEED XXX FT
- END SHOULDER USE
- USE OTHER ROUTES
- WATCH FOR WORKERS
- STAY IN LANE *

Location List

- AT FM XXXX
- BEFORE RAILROAD CROSSING
- NEXT X MILES
- PAST US XXX EXIT
- XXXXXXX TO XXXXXXX
- US XXX TO FM XXXX

Warning List

- SPEED LIMIT XX MPH
- MAXIMUM SPEED XX MPH
- MINIMUM SPEED XX MPH
- ADVISORY SPEED XX MPH
- RIGHT LANE EXIT
- USE CAUTION
- DRIVE SAFELY
- DRIVE WITH CARE

** Advance Notice List

- TUE-FRI XX AM- X PM
- APR XX-XX X PM-X AM
- BEGINS MONDAY
- BEGINS MAY XX
- MAY X-X XX PM - XX AM
- NEXT FRI-SUN
- XX AM TO XX PM
- NEXT TUE AUG XX
- TONIGHT XX PM- XX AM

* LANES SHIFT in Phase 1 must be used with STAY IN LANE in Phase 2.

** See Application Guidelines Note 6.

Wording Alternatives

1. The words RIGHT, LEFT and ALL can be interchanged as appropriate.
2. Roadway designations IH, US, SH, FM and LP can be interchanged as appropriate.
3. EAST, WEST, NORTH and SOUTH (or abbreviations E, W, N and S) can be interchanged as appropriate.
4. Highway names and numbers replaced as appropriate.
5. ROAD, HIGHWAY and FREEWAY can be interchanged as needed.
6. AHEAD may be used instead of distances if necessary.
7. FT and MI, MILE and MILES interchanged as appropriate.
8. AT, BEFORE and PAST interchanged as needed.
9. Distances or AHEAD can be eliminated from the message if a location phase is used.

PCMS SIGNS WITHIN THE R.O.W. SHALL BE BEHIND GUARDRAIL OR CONCRETE BARRIER OR SHALL HAVE A MINIMUM OF FOUR (4) PLASTIC DRUMS PLACED PERPENDICULAR TO TRAFFIC ON THE UPSTREAM SIDE OF THE PCMS.

FULL MATRIX PCMS SIGNS

1. When Full Matrix PCMS signs are used, the character height and legibility/visibility requirements shall be maintained as listed in Note 15 under "PORTABLE CHANGEABLE MESSAGE SIGNS" above.
2. When symbol signs, such as the CW20-7a Flagger Symbol, are represented graphically on the Full Matrix PCMS sign and, with the approval of the Engineer, it shall maintain the legibility/visibility requirement listed above.
3. When symbol signs are represented graphically on the Full Matrix PCMS, they shall only supplement the use of the static sign represented, and shall not substitute for, or replace that sign.
4. A full matrix PCMS may be used to simulate a flashing arrow panel provided it meets the visibility, flash rate and dimming requirements on BC(7), for the same size arrow.

Texas Department of Transportation
Traffic Operations Division

BARRICADE AND CONSTRUCTION PORTABLE CHANGEABLE MESSAGE SIGN (PCMS) STANDARD

6 of 12 BC(6)-07

© TxDOT 11-4-02

9-07 REVISIONS

DN: TXDOT	CK: TXDOT	DW: TXDOT	CK: TXDOT
CONT	SECT	JOB	HIGHWAY
0027	09	099	US 90A
DIST	COUNTY		SHEET NO.
12	HARRIS		17

DISCLAIMER:
The use of this standard is governed by the "Texas Engineering Practice Act". No warranty of any kind is made by TxDOT for any purpose whatsoever. TxDOT assumes no responsibility for the conversion of this standard to other formats or for incorrect results or damages resulting from its use.

BARRIER REFLECTORS FOR CONCRETE TRAFFIC BARRIER AND ATTENUATORS

1. Barrier Reflectors shall be prequalified, and conform to the color and reflectivity requirements of DMS-8600. A list of prequalified Barrier Reflectors (Type C Delineators) can be found at the Material Producer List web address shown on BC(1).
2. Color of Barrier Reflectors shall be as specified in the TMUTCD. The cost of the reflectors shall be considered subsidiary to Item 502.

CONCRETE TRAFFIC BARRIER (CTB)

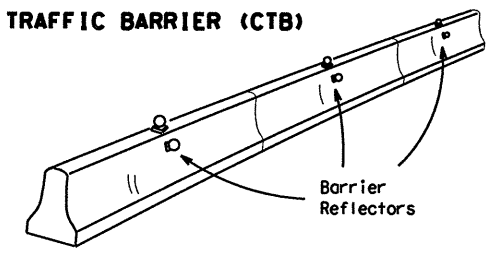

3. Where traffic is on one side of the CTB, two (2) Barrier Reflectors shall be mounted in approximately the midsection of each section of CTB. An alternate mounting location is uniformly spaced at one end of each CTB. This will allow for attachment of a barrier grapple without damaging the reflector. The Barrier Reflector mounted on the side of the CTB shall be located directly below the reflector mounted on top of the barrier, as shown in the detail above.
4. Where CTB separates two-way traffic, three barrier reflectors shall be mounted on each section of CTB. The reflector unit on top shall have two yellow reflective faces (Bi-Directional)while the reflectors on each side of the barrier shall have one yellow reflective face, as shown in the detail above.
5. When CTB separates traffic traveling in the same direction, no barrier reflectors will be required on top of the CTB.
6. Barrier Reflector units shall be yellow or white in color to match the edgeline being supplemented. Yellow Barrier Reflectors shall be made with Type E Fluorescent Prismatic Yellow Retroreflective Sheeting. White reflectors shall be made with Type D White Prismatic sheeting.
7. Maximum spacing of Barrier Reflectors is forty (40) feet.
8. Pavement markers or temporary flexible-reflective roadway marker tabs shall NOT be used as CTB delineation.
9. Attachment of Barrier Reflectors to CTB shall be per manufacturer's recommendations.
10. Missing or damaged Barrier Reflectors shall be replaced as directed by the Engineer.
11. Single slope barriers shall be delineated as shown on the above detail.

LOW PROFILE CONCRETE BARRIER (LPCB)

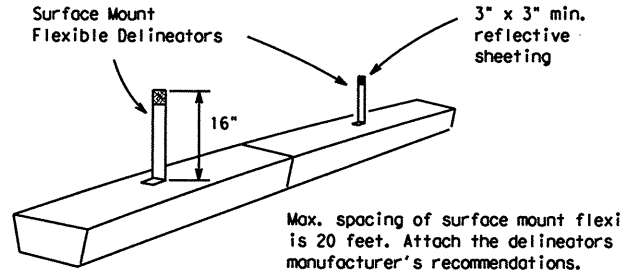

Max. spacing of surface mount flexible delineators is 20 feet. Attach the delineators as per manufacturer's recommendations.

DELINEATION OF END TREATMENTS

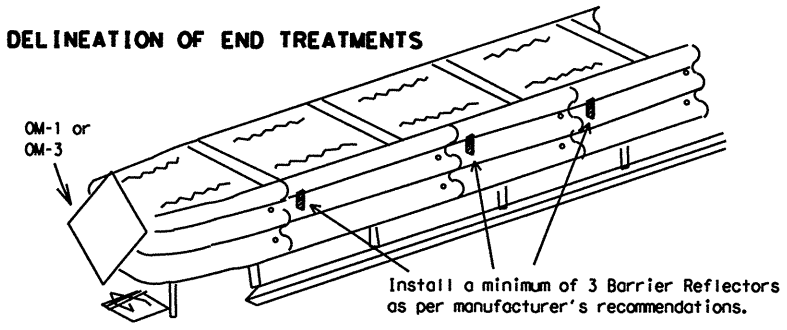

	APPROACHING TRAFFIC	
	BOTH SIDES	ONE SIDE
DELINEATION	OM-1	OM-3 or Vertical Panel

END TREATMENTS FOR CTB'S USED IN WORK ZONES

End treatments used on CTB's in work zones shall meet crashworthy standards as defined in the National Cooperative Highway Research Report 350. Refer to the CWZTCD List for approved end treatments and manufacturers.

TYPICAL FLASHING ARROW PANEL

Arrow Panels may be located behind channelizing devices in place for a shoulder taper or merging taper, otherwise they shall be delineated with four (4) channelizing devices placed perpendicular to traffic on the upstream side of traffic.

1. The Flashing Arrow Panel should be used for all lane closures on multi-lane roadways, or slow moving maintenance or construction activities on the travel lanes.
2. Flashing Arrow Panels should not be used on two-lane, two-way roadways, detours, diversions or work on shoulders unless the "CAUTION" display (see detail below) is used.
3. The Engineer/Inspector shall choose all appropriate signs, barricades and/or other traffic control devices that should be used in conjunction with the Flashing Arrow Panel.
4. The Flashing Arrow Panel should be able to display the following symbols:

Flashing RIGHT (LEFT) ARROW

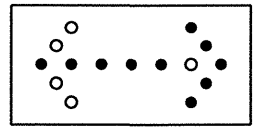

Flashing DOUBLE ARROW

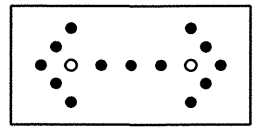

Flashing CAUTION

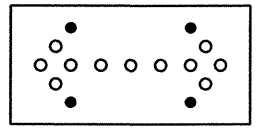

5. The "CAUTION" display consists of four corner lamps flashing simultaneously.
6. The straight line caution display is NOT ALLOWED.
7. The Flashing Arrow Panel shall be capable of minimum 50 percent dimming from rated lamp voltage. The flashing rate of the lamps shall not be less than 25 nor more than 40 flashes per minute.
8. Minimum lamp "on time" shall be approximately 50 percent for the flashing arrow and equal intervals of 25 percent for each sequential phase of the flashing chevron.
9. The sequential arrow display is NOT ALLOWED.
10. The flashing arrow display is the TxDOT standard; however, the sequential Chevron display may be used during daylight operations.

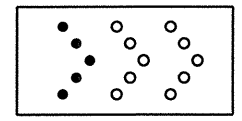

Sequential Chevron

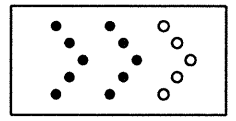

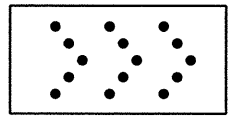

REQUIREMENTS

TYPE	MINIMUM SIZE	MINIMUM NUMBER OF PANEL LAMPS	MINIMUM VISIBILITY DISTANCE
B	30 x 60	13	3/4 mile
C	48 x 96	15	1 mile

ATTENTION: Flashing Arrow Panels shall be equipped with automatic dimming devices.

WHEN NOT IN USE, REMOVE THE ARROW PANEL FROM THE RIGHT-OF-WAY OR PLACE THE ARROW PANEL BEHIND CONCRETE TRAFFIC BARRIER OR GUARDRAIL.

11. The Flashing Arrow Panel shall be mounted on a vehicle, trailer or other suitable support.
12. A Flashing Arrow Panel SHALL NOT BE USED to laterally shift traffic.
13. A full matrix PCMS may be used to simulate a Flashing Arrow Panel provided it meets visibility, flash rate and dimming requirements on this sheet for the same size arrow.
14. Minimum mounting height of trailer mounted arrow panels should be 7 feet from roadway to bottom of panel.

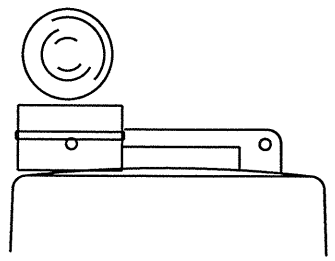

Type C Warning Light or approved substitute mounted adjacent to the travel way.

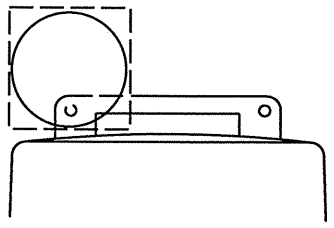

Warning reflector may be round or square. Must have a reflective surface area of at least 30 square inches

WARNING LIGHTS

1. Warning lights shall meet the requirements of the TMUTCD.
2. Warning lights shall NOT be installed on barricades.
3. Type A-Low Intensity Flashing Warning Lights are commonly used with drums. They are intended to warn of or mark a potentially hazardous area. Their use shall be as indicated on this sheet and/or other sheets of the plans by the designation "FL". The Type A Warning Lights shall not be used with signs manufactured with Type E Sheeting (Fluorescent Prismatic) meeting the requirements of Departmental Material Specification DMS-8300.
4. Type-C and Type D 360 degree Steady Burn Lights are intended to be used in a series for delineation to supplement other traffic control devices. Their use shall be as indicated on this sheet and/or other sheets of the plans by the designation "SB".
5. The Engineer/Inspector or the plans shall specify the location and type of warning lights to be installed on the traffic control devices.
6. When required by the Engineer, the Contractor shall furnish a copy of the warning lights certification. The warning light manufacturer will certify the warning lights meet the requirements of the latest ITE Purchase Specifications for Flashing and Steady-Burn Warning Lights.
7. When used to delineate curves, Type-C and Type D Steady Burn Lights should only be placed on the outside of the curve, not the inside.

WARNING LIGHTS MOUNTED ON PLASTIC DRUMS

1. Type A flashing warning lights are intended to warn drivers that they are approaching or are in a potentially hazardous area.
2. Type A random flashing warning lights are not intended for delineation and shall not be used in a series.
3. A series of sequential flashing warning lights placed on channelizing devices to form a merging taper may be used for delineation. If used, the successive flashing of the sequential warning lights should occur from the beginning of the taper to the end of the merging taper in order to identify the desired vehicle path. The rate of flashing for each light shall be 65 flashes per minute, plus or minus 10 flashes.
4. Type C and D steady-burn warning lights are intended to be used in a series to delineate the edge of the travel lane on detours, on lane changes, on lane closures, and on other similar conditions.
5. Type A, Type C and Type D warning lights shall be installed at locations as detailed on other sheets in the plans.
6. Warning lights shall not be installed on a drum that has a sign, chevron or vertical panel.
7. The maximum spacing for warning lights on drums should be identical to the channelizing device spacing.

WARNING REFLECTORS MOUNTED ON PLASTIC DRUMS AS A SUBSTITUTE FOR TYPE C (STEADY BURN) WARNING LIGHTS

1. A warning reflector or approved substitute may be mounted on a plastic drum as a substitute for a Type C, steady burn warning light at the discretion of the Contractor unless otherwise noted in the plans.
2. The warning reflector shall be yellow in color and shall be manufactured using a sign substrate approved for use with plastic drums listed on the CWZTCD.
3. The warning reflector shall have a minimum retroreflective surface area (one-side) of 30 square inches.
4. Round reflectors shall be fully reflectorized, including the area where attached to the drum.
5. Square substrates must have a minimum of 30 square inches of reflectorized sheeting. They do not have to be reflectorized where it attaches to the drum.
6. The side of the warning reflector facing approaching traffic shall have sheeting meeting the color and retroreflectivity requirements for DMS 8300-Type D (Non-fluorescent Prismatic).
7. When used near two-way traffic, both sides of the warning reflector shall be reflectorized.
8. The warning reflector should be mounted on the side of the handle nearest approaching traffic.
9. The maximum spacing for warning reflectors should be identical to the channelizing device spacing requirements.

TRUCK-MOUNTED ATTENUATORS

1. Truck-mounted attenuators (TMA) used on TxDOT facilities must meet the requirements outlined in the National Cooperative Highway Research Report No. 350 (NCHRP 350).
2. Refer to the CWZTCD for the requirements of Level 2 or Level 3 TMAs.
3. Refer to the dates shown in the CWZTCD to ensure that the TMA meets the age requirements and the crashworthiness criteria established by the Federal Highway Administration (FHWA) for TMAs.
4. Refer to the CWZTCD for a list of approved TMAs.
5. TMAs are required on freeways unless otherwise noted in the plans.
6. A TMA should be used anytime that it can be positioned approximately 30 to 100 feet in advance of the area of crew exposure without adversely affecting the work performance.
7. The only reason a TMA should not be required is when a work area is spread down the roadway and the work crew is on extended distance from the TMA.

Texas Department of Transportation
Traffic Operations Division

BARRICADE AND CONSTRUCTION ARROW PANEL, REFLECTORS, WARNING LIGHTS & ATTENUATOR STANDARD

7 of 12 BC(7)-07

© TxDOT 11-4-02	DN: TXDOT	CK: TXDOT	DW: TXDOT	CK: TXDOT
9-07 REVISIONS	CONT	SECT	JOB	HIGHWAY
	0027	09	099	US 90A
	DIST	COUNTY		SHEET NO.
	12	HARRIS		18

DATE:
FILE:

DISCLAIMER:
The use of this standard is governed by the "Texas Engineering Practice Act". No warranty of any kind is made by TxDOT for any purpose whatsoever. TxDOT assumes no responsibility for the conversion of this standard to other formats or for incorrect results or damages resulting from its use.

DATE:
FILE:

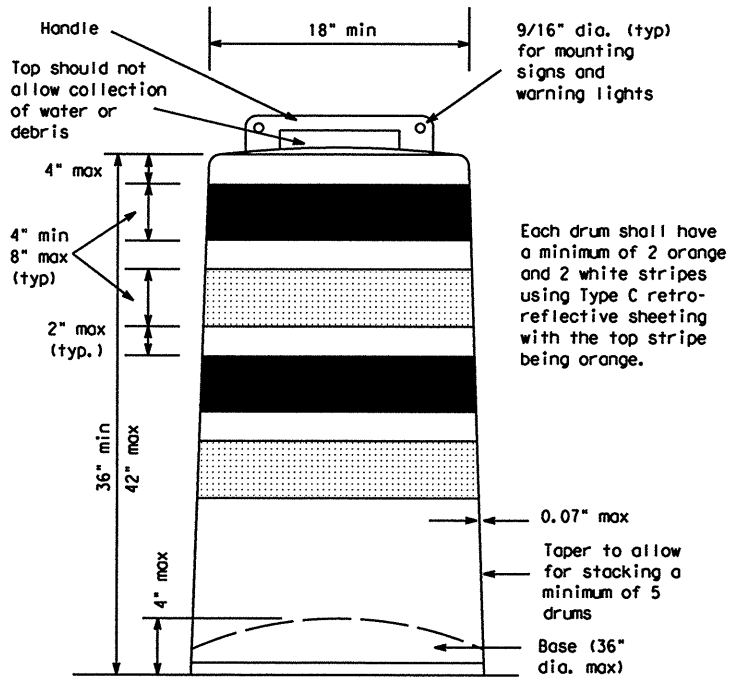

GENERAL NOTES

1. For long term stationary work zones on freeways, drums shall be used as the primary channelizing device.
2. For intermediate term stationary work zones on freeways, drums should be used as the primary channelizing device but may be replaced in tangent sections by vertical panels, or 42" two-piece cones. In tangent sections one-piece cones may be used with the approval of the Engineer but only if personnel are present on the project at all times to maintain the cones in proper position and location.
3. For short term stationary work zones on freeways, drums are the preferred channelizing device but may be replaced in tapers, transitions and tangent sections by vertical panels, two-piece cones or one-piece cones as approved by the Engineer.
4. Drums and all related items shall comply with the requirements of the current version of the "Texas Manual on Uniform Traffic Control Devices" (TMUTCD) and the "Compliant Work Zone Traffic Control Devices List" (CWZTCD).
5. Drums, bases, and related materials shall exhibit good workmanship and shall be free from objectionable marks or defects that would adversely affect their appearance or serviceability.
6. The Contractor shall have a maximum of 24 hours to replace any plastic drums identified for replacement by the Engineer/Inspector. The replacement device must be an approved device.

GENERAL DESIGN REQUIREMENTS

Prequalified plastic drums shall meet the following requirements:

1. Plastic drums shall be a two-piece design; the "body" of the drum shall be the top portion and the "base" shall be the bottom.
2. The body and base shall lock together in such a manner that the body separates from the base when impacted by a vehicle traveling at a speed of 20 MPH or greater but prevents accidental separation due to normal handling and/or air turbulence created by passing vehicles.
3. Plastic drums shall be constructed of lightweight flexible, and deformable materials. The Contractor shall NOT use metal drums or single piece plastic drums as channelization devices or sign supports.
4. Drums shall present a profile that is a minimum of 18 inches in width at the 36 inch height when viewed from any direction. The height of drum unit (body installed on base) shall be a minimum of 36 inches and a maximum of 42 inches.
5. The top of the drum shall have a built-in handle for easy pickup and shall be designed to drain water and not collect debris. The handle shall have a minimum of two widely spaced 9/16 inch diameter holes to allow attachment of a warning light, warning reflector unit or approved compliant sign.
6. The exterior of the drum body shall have a minimum of four alternating orange and white retroreflective circumferential stripes not less than 4 inches nor greater than 8 inches in width. Any non-reflectorized space between any two adjacent stripes shall not exceed 2 inches in width.
7. Bases shall have a maximum width of 36 inches, a maximum height of 4 inches, and a minimum of two footholds of sufficient size to allow base to be held down while separating the drum body from the base.
8. Plastic drums shall be constructed of ultra-violet stabilized, orange, high-density polyethylene (HDPE) or other approved material.
9. Drum body shall have a minimum unballasted weight of 7.7 lbs. and maximum unballasted weight of 11 lbs. The wall of the drum body shall be a minimum of 0.07 inch in thickness. Weight of any drum supplied shall not vary more than 0.5 lb. from that of the prequalified sample.
10. Drum and base shall be marked with manufacturer's name and model number.

RETROREFLECTIVE SHEETING

1. The stripes used on drums shall be constructed of sheeting meeting the color and retroreflectivity requirements of Departmental Materials Specification DMS-8300, "Flat Surface Reflective Sheeting." High Specific Intensity (Type C) retroreflective sheeting shall be supplied unless otherwise specified in the plans.
2. The sheeting shall be suitable for use on and shall adhere to the drum surface such that, upon vehicular impact, the sheeting shall remain adhered in-place and exhibit no delaminating, cracking, or loss of retroreflectivity other than that loss due to abrasion of the sheeting surface.

BALLAST

1. Unballasted bases shall be large enough to hold up to 50 lbs. of sand. This base, when filled with the ballast material, should weigh between 35 lbs (minimum) and 50 lbs (maximum). The ballast may be sand in one to three sandbags separate from the base, sand in a sand-filled plastic base, or other ballasting devices as approved by the Engineer. Stacking of sandbags will be allowed, however height of sandbags above pavement surface may not exceed 12 inches.
2. Bases with built-in ballast shall weigh between 40 lbs. and 50 lbs. Built-in ballast can be constructed of an integral crumb rubber base or a solid rubber base.
3. The ballast shall not be heavy objects, water, or any material that would become hazardous to motorists, pedestrians, or workers when the drum is struck by a vehicle.
4. When used in regions susceptible to freezing, drums shall have drainage holes in the bottoms so that water will not collect and freeze becoming a hazard when struck by a vehicle.
5. Ballast shall not be placed on top of drums.
6. Adhesives may be used to secure base of drums to pavement.

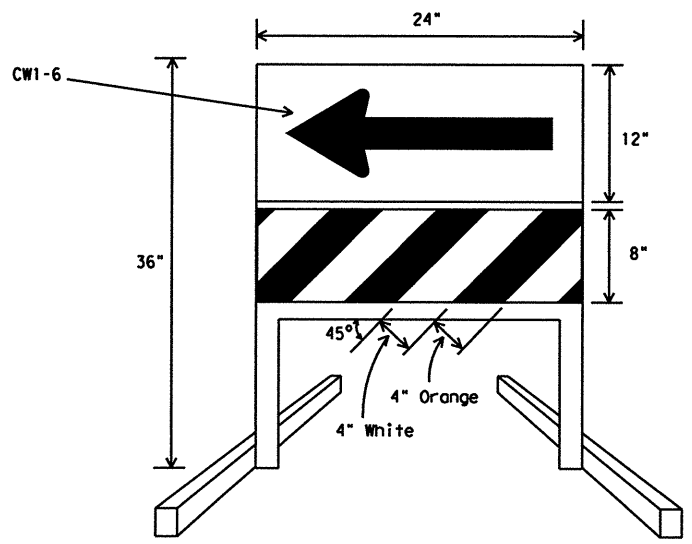

DIRECTION INDICATOR BARRICADE

1. The Direction Indicator Barricade may be used in tapers, transitions, and other areas where specific directional guidance to drivers is necessary.
2. If used, the Direction Indicator Barricade should be used in series to direct the driver through the transition and into the intended travel lane.
3. The Direction Indicator Barricade shall consist of One-Direction Large Arrow (CW1-6) sign in the size shown with a black arrow on a background of Type E Fluoprescent Prismatic Orange above a rail with Type C High Specific Intensity retroreflective sheeting in alternation 4" white and orange stripes sloping downward at an angle of 45 degrees in the direction road users are to pass.
4. Double arrows on the Direction Indicator Barricade will not be allowed.
5. Approved manufacturers are shown on the CWZTCD List. Ballast shall be as approved by the manufacturers instructions.

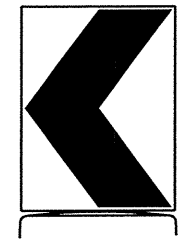

18" x 24" Sign
(Maximum Sign Dimension)
Chevron CW1-8, Opposing Traffic Lane Divider, Driveway sign D70a, Keep Right R4 series or other signs as approved by Engineer

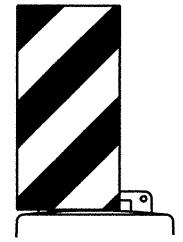

12" x 24"
Vertical Panel
mount with diagonals sloping down towards travel way

Plywood, Aluminum or Metal sign substrates shall NOT be used on plastic drums

SIGNS, CHEVRONS, AND VERTICAL PANELS MOUNTED ON PLASTIC DRUMS

1. Signs used on plastic drums shall be manufactured using substrates listed on the CWZTCD.
2. Chevrons and other work zone signs with an orange background shall be manufactured with Type E (Fluorescent Prismatic) sheeting meeting the color and retroreflectivity requirements of DMS-8300, "Sign Face Material," unless otherwise specified in the plans.
3. Vertical Panels shall be manufactured with orange and white sheeting meeting the requirements of DMS-8300 Type C (High Specific Intensity). Diagonal stripes on Vertical Panels shall slope down toward the intended traveled lane.
4. Other sign messages (text or symbolic) may be used as approved by the Engineer. Sign dimensions shall not exceed 18 inches in width or 24 inches in height.
5. Signs shall be installed using a 1/2 inch bolt (nominal) and nut, two washers, and one locking washer for each connection.
6. Mounting bolts and nuts shall be fully engaged and adequately torqued. Bolts should not extend more than 1/2 inch beyond nuts.
7. Chevrons may be placed on drums on the outside of curves, on merging tapers or on shifting tapers. When used in these locations they may be placed on every drum or spaced not more than on every third drum. A minimum of three (3) should be used at each location called for in the plans.
8. R9-9, R9-10, R9-11 and R9-11a Sidewalk Closed signs which are 24 inches wide may be mounted on plastic drums, with approval of the Engineer.

Texas Department of Transportation
Traffic Operations Division

BARRICADE AND CONSTRUCTION CHANNELIZING DEVICES STANDARD

8 of 12 BC(8)-07

©TxDOT 11-4-02

DN: TXDOT	CK: TXDOT	DW: TXDOT	CK: TXDOT

REVISIONS
4-03
9-07

CONT	SECT	JOB	HIGHWAY
0027	09	099	US 90A

DIST	COUNTY	SHEET NO.
12	HARRIS	19

DISCLAIMER: The use of this standard is governed by the "Texas Engineering Practice Act". No warranty of any kind is made by TxDOT for any purpose whatsoever. TxDOT assumes no responsibility for the conversion of this standard to other formats or for incorrect results or damages resulting from its use.

CHANNELIZING DEVICES

VERTICAL PANELS (VPs)

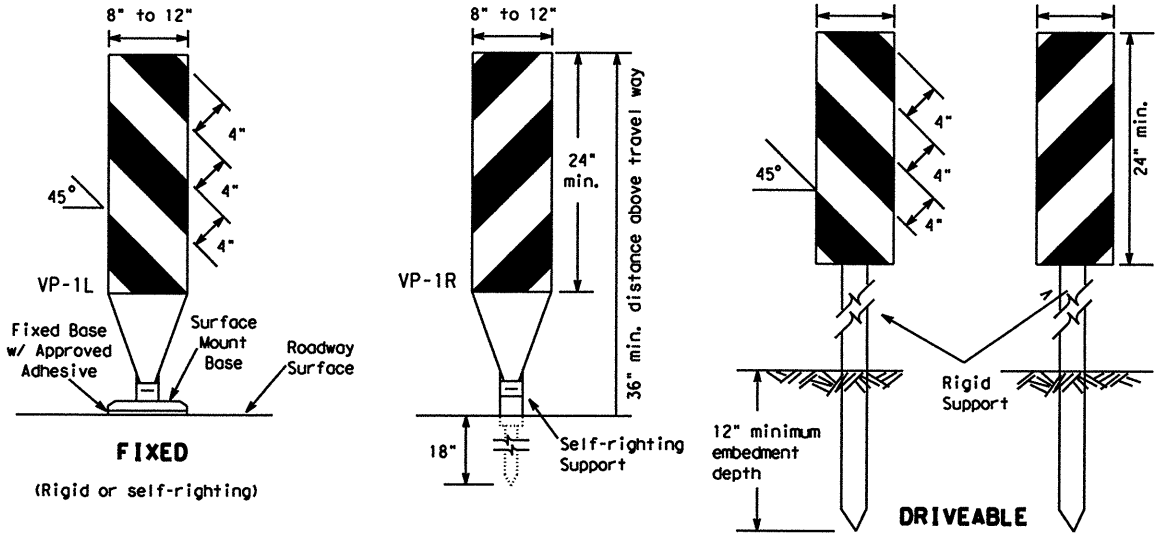

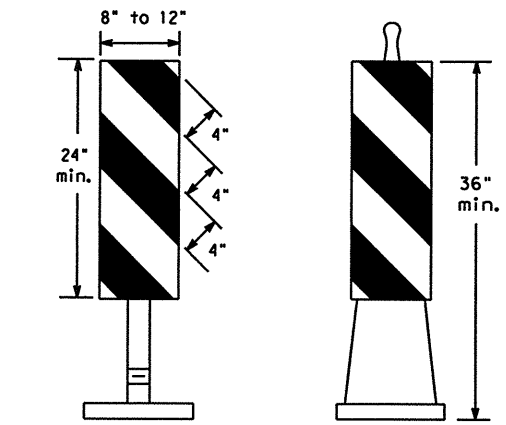

1. Vertical Panels (VP's) are normally used to channelize traffic or divide opposing lanes of traffic.
2. VP's may be used in daytime or nighttime situations. They may be used at the edge of shoulder drop-offs and other areas such as lane transitions where positive daytime and nighttime delineation is required. The Engineer/Inspector shall refer to the Roadway Design Manual Appendix B "Treatment of Pavement Drop-offs in Work Zones" for additional guidelines on the use of VP's for drop-offs.
3. VP's should be mounted back to back if used at the edge of cuts adjacent to two-way two lane roadways. Stripes are to be reflective orange and reflective white and should always slope downward toward the travel lane.
4. VP's used on expressways and freeways or other high speed roadways, shall have a minimum of 270 square inches of retroreflective area facing traffic.
5. Self-righting supports are available with portable base. See "Compliant Work Zone Traffic Control Devices List" (CWZTCD).
6. Sheeting for the VP's shall be retroreflective Type C (High Specific Intensity) conforming to Departmental Material Specification DMS-8300, unless noted otherwise.
7. Where the height of reflective material on the vertical panel is greater than 36 inches, a panel stripe of 6 inches shall be used.

CHEVRONS

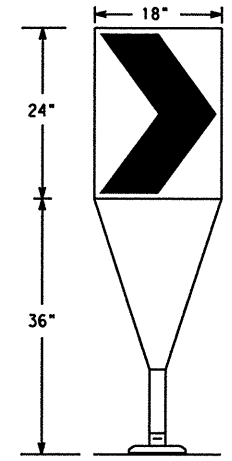

Fixed Base w/ Approved Adhesive (Driveable Base, or Flexible Support can be used)

1. The chevron shall be a vertical rectangle with a minimum size of 12 by 18 inches.
2. Chevrons are intended to give notice of a sharp change of alignment with the direction of travel and provide additional emphasis and guidance for vehicle operators with regard to changes in horizontal alignment of the roadway.
3. Chevrons, when used, shall be erected on the outside of a sharp curve or turn, or on the far side of an intersection. They shall be in line with and at right angles to approaching traffic. Spacing should be such that the motorist always has three in view, until the change in alignment eliminates its need.
4. To be effective, the chevron should be visible for at least 500 feet.
5. Chevrons shall be orange with a black nonreflective legend. Sheeting for the chevron shall be retroreflective Type E (Fluorescent Prismatic) conforming to Departmental Material Specification DMS-8300, unless noted otherwise. The legend shall be black vinyl non-reflective decal sheeting meeting the requirements of DMS-8300.
6. For Long Term Stationary use on tapers or transitions on freeways and divided highways self-righting chevrons may be used to supplement plastic drums but not to replace plastic drums.

GENERAL NOTES:

1. Work Zone channelizing devices illustrated on this sheet may be installed in close proximity to traffic and are suitable for use on high or low speed roadways. The Engineer/Inspector shall ensure that spacing and placement is uniform and in accordance with the "Texas Manual on Uniform Traffic Control Devices" (TMUTCD).
2. Channelizing devices shown on this sheet may have a driveable, fixed or portable base. The requirement for self-righting channelizing devices must be specified in the General Notes or other plan sheets.
3. Channelizing devices on self-righting supports should be used in work zone areas where channelizing devices are frequently impacted by errant vehicles or vehicle related wind gusts making alignment of the channelizing devices difficult to maintain. Locations of these devices shall be detailed elsewhere in the plans. These devices shall conform to the TMUTCD and the "Compliant Work Zone Traffic Control Devices List" (CWZTCD).
4. The Contractor shall maintain devices in a clean condition and replace damaged, nonreflective, faded, or broken devices and bases as required by the Engineer/Inspector. The Contractor shall be required to maintain proper device spacing and alignment.
5. Portable bases shall be fabricated from virgin and/or recycled rubber. The portable bases shall weigh approximately 35 lbs.
6. Pavement surfaces shall be prepared in a manner that ensures proper bonding between the adhesives, the fixed mount bases and the pavement surface. Adhesives shall be prepared and applied according to the manufacturer's recommendations.
7. The installation and removal of channelizing devices shall not cause detrimental effects to the final pavement surfaces, including pavement surface discoloration or surface integrity. Driveable bases shall not be permitted on final pavement surfaces. The Engineer/Inspector shall approve all application and removal procedures of fixed bases.
8. Examples on this sheet are commonly used channelizing devices in work zones. For other devices, refer to the CWZTCD.

OPPOSING TRAFFIC LANE DIVIDERS (OTLD)

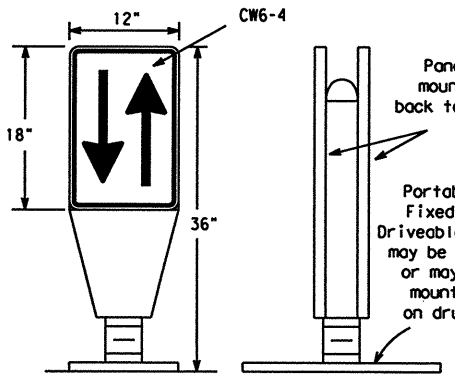

1. Opposing Traffic Lane Dividers (OTLD) are delineation devices designed to convert a normal one-way roadway section to two-way operation. OTLD's are used on temporary centerlines. The upward and downward arrows on the sign's face indicate the direction of traffic on either side of the divider. The base is secured to the pavement with an adhesive or rubber weight to minimize movement caused by a vehicle impact or wind gust.
2. The OTLD may be used in combination with simple tubular markers or VPs.
3. Spacing between the OTLD shall not exceed 500 feet. Tubular markers or VPs placed between the OTLD's should not exceed 100 foot spacing.
4. The OTLD shall be orange with a black non-reflective legend. Sheeting for the OTLD shall be retroreflective Type E (Fluorescent Prismatic) conforming to Departmental Material Specification DMS-8300, unless noted otherwise. The legend shall be black vinyl non-reflective decal sheeting meeting the requirements of DMS-8300.

Posted Speed	Formula	Minimum Desirable Taper Lengths ✳✳ 10' Offset	11' Offset	12' Offset	Suggested Maximum Spacing of Channelizing Devices On a Taper	On a Tangent
30	$L=\frac{WS^2}{60}$	150'	165'	180'	30'	60'-75'
35		205'	225'	245'	35'	70'-90'
40		265'	295'	320'	40'	80'-100'
45	L=WS	450'	495'	540'	45'	90'-110'
50		500'	550'	600'	50'	100'-125'
55		550'	605'	660'	55'	110'-140'
60		600'	660'	720'	60'	120'-150'
65		650'	715'	780'	65'	130'-165'
70		700'	770'	840'	70'	140'-175'
75		750'	825'	900'	75'	150'-185'
80		800'	880'	960'	80'	160'-195'

✳✳Taper lengths have been rounded off.
L=Length of Taper (FT.) W=Width of Offset (FT.)
S=Posted Speed (MPH)

VERTICAL PANELS & OPPOSING TRAFFIC LANE DIVIDERS SEPARATING TWO-WAY TRAFFIC (Typical application)

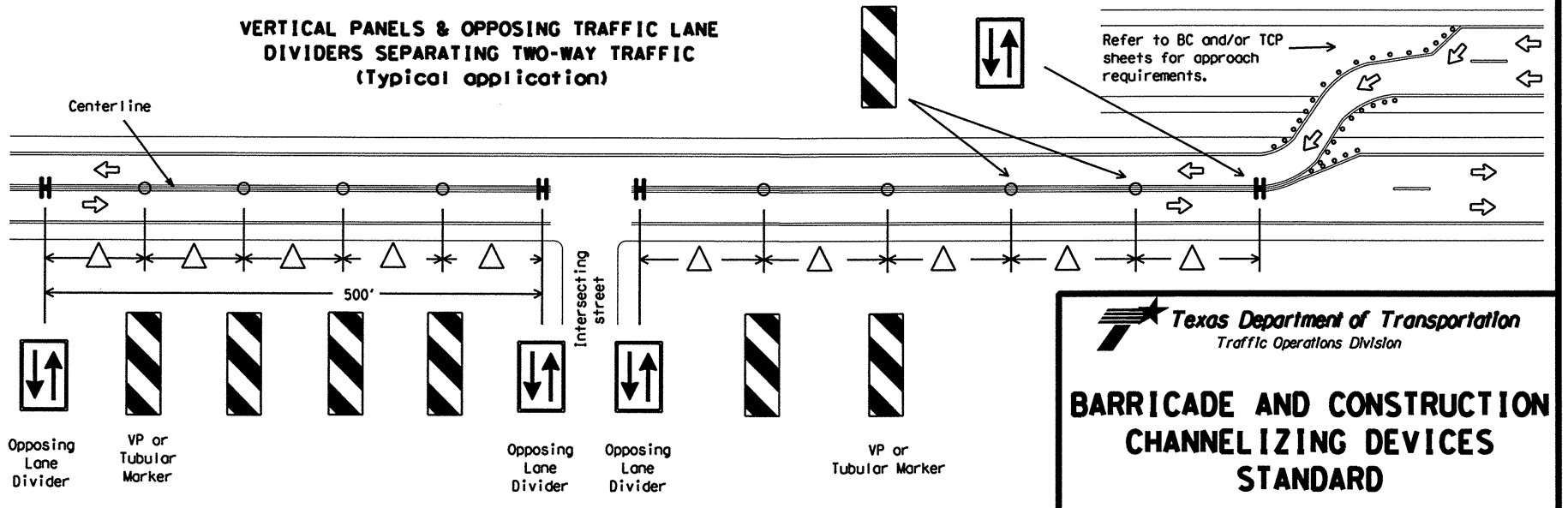

△ Spacing between the VP's or tubular markers shall not exceed 100 feet. On roadways with speeds less than 45 MPH, spacing between the tubular markers or VP's shall be as shown on the channelizing spacing table shown on this page. If the table shows spacing greater than 100 feet based on the roadway speed, then use a maximum of 100 feet spacing between the tubular markers or VP's. Every fifth channelizing device shall be an OTLD, except when the OLTD must be spaced closer to accomodate an intersection. Spacing between the OTLD shall not exceed 500 feet.

HOLLOW OR WATER BALLASTED SYSTEMS USED AS LONGITUDINAL CHANNELIZING DEVICES OR BARRIERS

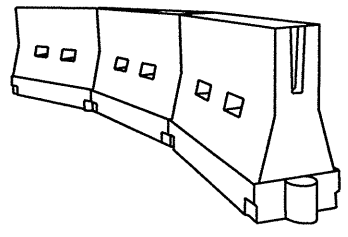

LONGITUDINAL CHANNELIZING DEVICES

1. Longitudinal channelizing devices are crashworthy, lightweight, deformable devices that are highly visible, have good target value and can be connected together. **They are not designed to contain or redirect a vehicle on impact.**
2. Longitudinal channelizing devices may be used instead of a line of cones or drums.
3. Longitudinal channelizing devices shall be placed in accordance to application and installation requirements specific to the device, and used only when shown on the CWZTCD list.
4. Longitudinal channelizing devices should not be used to provide positive protection for obstacles, pedestrians or workers.
5. Longitudinal channelizing devices shall be retroreflective, or supplemented with retroreflective delineation as required for temporary barriers on BC(7)-07.

WATER BALLASTED SYSTEMS USED AS BARRIERS

1. Water ballasted systems used as barriers shall not be used solely to channelize road users, but also to protect the work space per the appropriate NCHRP 350 crashworthiness requirements based on roadway speed and barrier application.
2. Water ballasted systems used to channelize vehicular traffic shall be supplemented with retroreflective delineation or channelizing devices to improve daytime/nighttime visibility. They may also be supplemented with pavement markings.
3. Water ballasted systems used as barriers shall be placed in accordance to application and installation requirements specific to the device, and used only when shown on the CWZTCD list.
4. Water ballasted systems used as barriers should not be used for a merging taper except in low speed (less than 45 MPH) urban areas. When used on a taper in a low speed urban area, the taper shall be delineated and the taper length should be designed to optimize road user operations considering the available geometric conditions.
5. When water ballasted systems used as barriers have blunt ends exposed to traffic, they should be attenuated as per manufacturer recommendations or flared to point outside the clear zone.

If used to channelize pedestrians, longitudinal channelizing devices or water ballasted systems must have a continuous detectable bottom for users of long canes and the top of the unit shall be not less than 32 inches in height.

DATE:
FILE:

Texas Department of Transportation
Traffic Operations Division

BARRICADE AND CONSTRUCTION CHANNELIZING DEVICES STANDARD

9 of 12 BC(9)-07

© TxDOT 11-4-02	DN: TXDOT	CK: TXDOT	DW: TXDOT	CK: TXDOT
9-07 REVISIONS	CONT	SECT	JOB	HIGHWAY
	0027	09	099	US 90A
	DIST	COUNTY		SHEET NO.
	12	HARRIS		20

DISCLAIMER: The use of this standard is governed by the "Texas Engineering Practice Act". No warranty of any kind is made by TxDOT for any purpose whatsoever. TxDOT assumes no responsibility for the conversion of this standard to other formats or for incorrect results or damages resulting from its use.

TYPE III BARRICADES

1. Refer to the Compliant Work Zone Traffic Control Devices List (CWZTCD) for details of the Type III Barricades and a list of all materials used in the construction of Type III Baricades.
2. Type III Barricades shall be used at each end of construction projects closed to all traffic.
3. Barricades extending across a roadway should have stripes that slope downward in the direction toward which traffic must turn in detouring. When both right and left turns are provided, the chevron striping may slope downward in both directions from the center of the barricade. Where no turns are provided at a closed road striping should slope downward in both directions toward the center of roadway.
4. Striping of rails, for the right side of the roadway, should slope downward to the left. For the left side of the roadway, striping should slope downward to the right.
5. Identification markings may be shown only on the back of the barricade rails. The maximum height of letters and/or company logos used for identification shall be 1".
6. Barricades shall not be placed parallel to traffic unless an adequate clear zone is provided.
7. Warning lights shall NOT be installed on barricades.
8. Where barricades require the use of weights to keep from turning over, the use of sandbags with dry, cohesionless sand is recommended. The sandbags will be tied shut to keep the sand from spilling and to maintain a constant weight. Sand bags shall not be stacked in a manner that covers any portion of a barricade rails reflective sheeting. Rock, concrete, iron, steel or other solid objects will NOT be permitted. Sandbags should weigh a minimum of 35 lbs and a maximum of 50 lbs. Sandbags shall be made of a durable material that tears upon vehicular impact. Rubber (such as tire inner tubes) shall not be used for sandbags. Sandbags shall only be placed along or upon the base supports of the device and shall not be suspended above ground level or hung with rope, wire, chains or other fasteners.
9. Sheeting for barricades shall be retroreflective Type C (High Specific Intensity) conforming to Departmental Material Specfication DMS-8300 unless otherwise noted.

Barricades shall NOT be used as a sign support.

TYPICAL STRIPING DETAIL FOR BARRICADE RAIL

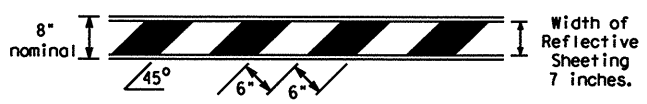

TYPICAL PANEL DETAIL FOR SKID OR POST TYPE BARRICADES

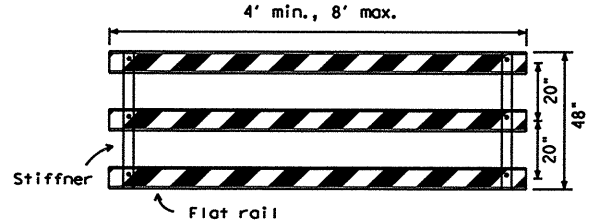

Stiffner may be inside or outside of support, but no more than 2 stiffeners shall be allowed on one barricade.

TYPE III BARRICADE (POST AND SKID) TYPICAL APPLICATION

Each roadway of a divided highway shall be barricaded in the same manner.

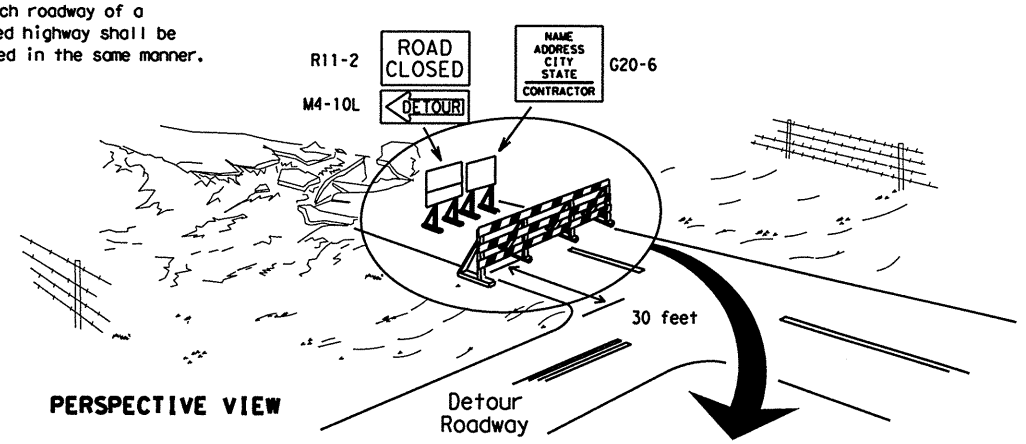

PERSPECTIVE VIEW

The three rails on Type III barricades shall be reflectorized orange and reflective white stripes on one side facing one-way traffic and both sides for two-way traffic.

Barricade striping should slant downward in the direction of detour.

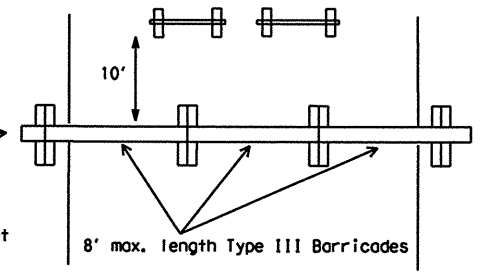

PLAN VIEW

1. Signs should be mounted on independent supports at a 7 foot mounting height in center of roadway. The signs should be a minimum of 10 feet behind Type III Barricades.
2. Advance signing shall be as specified elsewhere in the plans.

CULVERT WIDENING OR OTHER ISOLATED WORK WITHIN THE PROJECT LIMITS

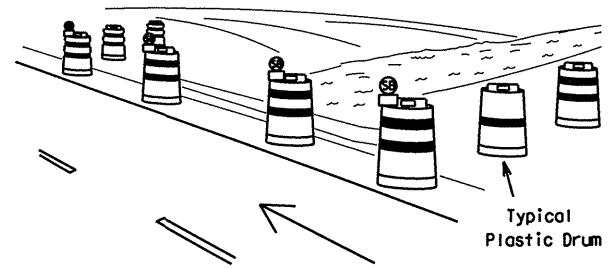

PERSPECTIVE VIEW

1. Where positive redirectional capability is provided, drums may be omitted.
2. Plastic construction fencing may be used with drums for safety as required in the plans.
3. Vertical Panels on flexible support may be substituted for drums when the shoulder width is less than 4 feet.
4. When the shoulder width is greater than 12 feet, steady-burn lights may be omitted if drums are used.
5. Drums must extend the length of the culvert widening.

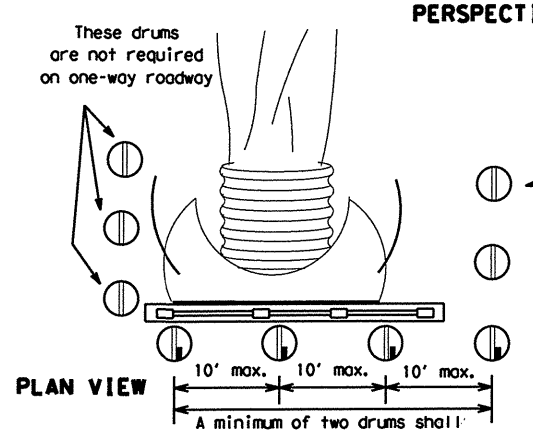

PLAN VIEW

Increase number of plastic drums on the side of approaching traffic if the crown width makes it necessary. (minimum of 2 and maximum of 4 drums)

Legend

- Plastic drum
- Plastic drum with steady burn light or yellow warning reflector
- (SB) Steady burn warning light or yellow warning reflector

CONES

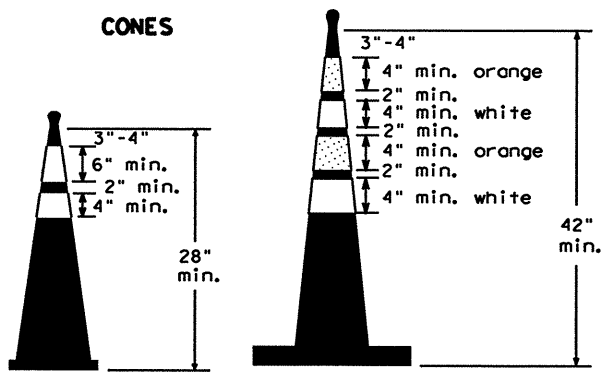

Two-Piece cones

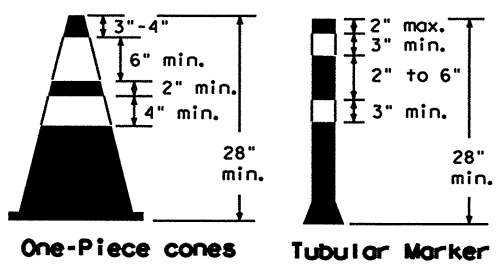

One-Piece cones Tubular Marker

28" Cones shall have a minimum weight of 9 1/2 lbs.

42" 2-piece cones shall have a minimum weight of 30 lbs. including base.

1. Traffic cones and tubular markers shall be a minimum of 28 inches in height when used either on freeways or at nighttime.
2. Cones or tubular markers shall be predominantly orange, fluorescent red-orange, or fluorescent yellow-orange. They should be kept clean and bright for maximum visibility.
3. Cones used only for daytime operations do not require the reflectorized bands.
4. Cones and tubular markers used for nighttime operations shall be reflectorized. Reflectorized material shall have a smooth, sealed outer surface that displays the same approximate color during the day and night. The reflectorized bands shall be retroreflective Type C (High Specific Intensity) conforming to Departmental Material Specification DMS-8300, unless otherwise noted.
5. When used at night, appropriate personnel shall ensure that cones and tubular markers remain in their proper location and in an upright position.
6. Reflectorization of 28"cones shall consist of a minimum 6 inch band placed at least 3 inches but not more than 4 inches from the top, supplemented by a minimum 4 inch band spaced a minimum of 2 inches below the 6 inch band.
7. Reflectorization of 42" cones shall be provided by alternating 4 to 6" orange and white stripes with orange on top.
8. Reflectorization of tubular markers shall be a minimum of two 3 inch bands placed a maximum of 2 inches from the top with a maximum of 6 inches between bands.
9. One-piece cones or tubular markers are generally suitable for temporary usage (up to 8 hours) with other channelization devices such as vertical panels, drums or two-piece cones for long term usage. Care should be taken to ensure they remain in their proper location and in an upright position.
10. Cones or tubular markers used on each project shall be of the same size and shape.
11. The handle may be designed as a hook or other shape, fabricated from non-rigid materials similar to the cone material, and may extend up to a maximum of 8 inches above the top of cone. Length of the handle shall not be considered with regard to the overall height of the cone.

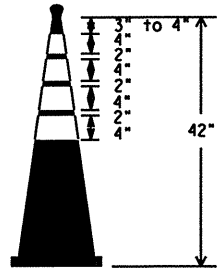

EDGELINE CHANNELIZER

1. This device is intended only for use in place of a vertical panel to channelize traffic by indicating the edge of the travel lane. It is not intended to be used in transitions or tapers.
2. This device shall not be used to separate lanes of traffic (opposing or otherwise) or warn of objects.
3. This device is based on a 42 inch, two-piece cone with an alternate striping pattern: four 4 inch retroreflective bands, with an approximate 2 inch gap between bands. The color of the band should correspond to the color of the edgeline (yellow for left edgeline, white for right edgeline) for which the device is substituted or for which it supplements. The reflectorized bands shall be retroreflective Type C encapsulated bead (High Specific Intensity) conforming to Departmental Material Specification DMS-8300, unless otherwise noted.
4. The base must weigh a minimum of 30 lbs.

TRAFFIC CONTROL FOR MATERIAL STOCKPILES

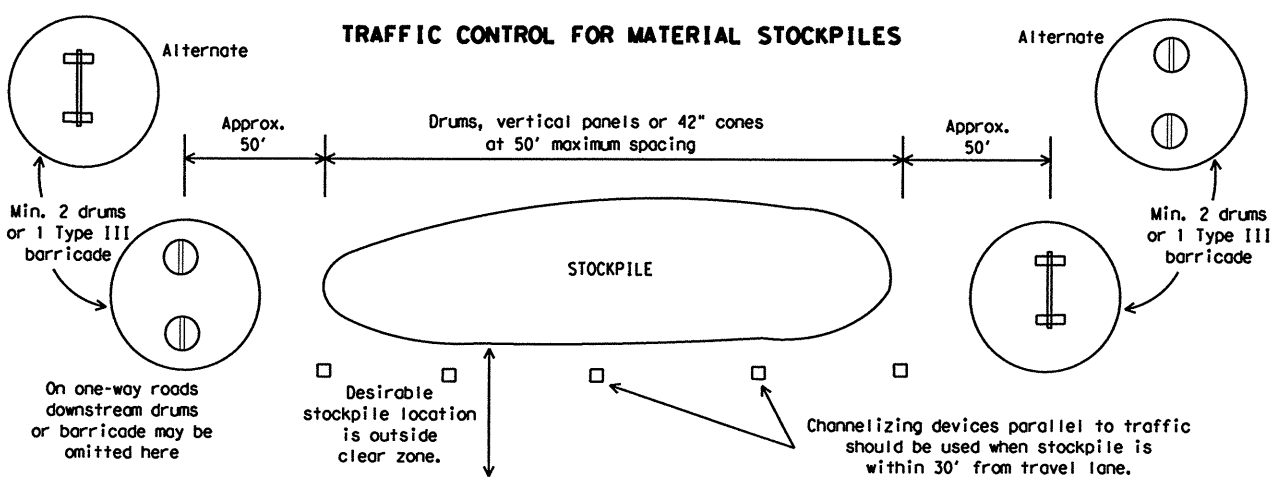

Texas Department of Transportation
Traffic Operations Division

BARRICADE AND CONSTRUCTION CHANNELIZING DEVICES STANDARD

10 of 12 BC(10)-07

©TxDOT 11-4-02

DN: TXDOT	CK: TXDOT	DW: TXDOT	CK: TXDOT

9-07 REVISIONS

CONT	SECT	JOB	HIGHWAY
0027	09	099	US 90A
DIST	COUNTY		SHEET NO.
12	HARRIS		21

DATE:
FILE:

DISCLAIMER: The use of this standard is governed by the "Texas Engineering Practice Act". No warranty of any kind is made by TxDOT for any purpose whatsoever. TxDOT assumes no responsibility for the conversion of this standard to other formats or for incorrect results or damages resulting from its use.

WORK ZONE PAVEMENT MARKINGS

GENERAL

1. The Contractor shall be responsible for maintaining work zone and existing pavement markings, in accordance with the standard specifications and special provisions, on all roadways open to traffic within the CSJ limits unless otherwise stated in the plans.
2. Color, patterns and dimensions shall be in conformance with the "Texas Manual on Uniform Traffic Control Devices" (TMUTCD).
3. Additional supplemental pavement marking details may be found in the plans or specifications.
4. Pavement markings shall be installed in accordance with the TMUTCD and as shown on the plans.
5. When short term markings are required on the plans, short term markings shall conform with the TMUTCD, the plans and details as shown on the Standard Plan Sheet WZ(STPM).
6. When standard pavement markings are not in place and the roadway is opened to traffic, DO NOT PASS signs shall be erected to mark the beginning of the sections where passing is prohibited and PASS WITH CARE signs at the beginning of sections where passing is permitted.
7. All work zone pavement markings shall be installed in accordance with Item 662, "Work Zone Pavement Markings."

RAISED PAVEMENT MARKERS

1. Raised pavement markers are to be placed according to the patterns on BC(12).
2. All raised pavement markers used for work zone markings shall meet the requirements of Item 672, "RAISED PAVEMENT MARKERS" and Departmental Material Specification DMS-4200 or DMS-4300.

PREFABRICATED PAVEMENT MARKINGS

1. Removable prefabricated pavement markings shall meet the requirements of DMS-8241.
2. Non-removable prefabricated pavement markings (foil back) shall meet the requirements of DMS-8240.

MAINTAINING WORK ZONE PAVEMENT MARKINGS

1. The Contractor will be responsible for maintaining work zone pavement markings within the work limits.
2. Work zone pavement markings shall be inspected in accordance with the frequency and reporting requirements of work zone traffic control device inspections as required by Form 599.
3. The markings should provide a visible reference for a minimum distance of 300 feet during normal daylight hours and 160 feet when illuminated by automobile low-beam headlights at night, unless sight distance is restricted by roadway geometrics.
4. Markings failing to meet this criteria within the first 30 days after placement shall be replaced at the expense of the Contractor as per Specification Item 662.

REMOVAL OF PAVEMENT MARKINGS

1. Pavement markings that are no longer applicable, could create confusion or direct a motorist toward or into the closed portion of the roadway, shall be removed or obliterated before the roadway is opened to traffic.
2. The above shall not apply to detours in place for less than two weeks, where flaggers and/or sufficient channelizing devices are used in lieu of markings to outline the detour route.
3. Pavement markings shall be removed to the fullest extent possible, so as not to leave a discernable marking. This shall be by any method approved by TxDOT Specification Item 677 for "Eliminating Existing Pavement Markings and Markers".
4. The removal of pavement markings may require resurfacing or seal coating portions of the roadway.
5. Subject to the approval of the Engineer, any method that proves to be successful on a particular type pavement may be used.
6. Blast cleaning may be used but will not be required unless specifically shown in the plans.
7. Over-painting of the markings SHALL NOT BE permitted.
8. Removal of raised pavement markers shall be as directed by the Engineer.
9. Removal of existing pavement markings and markers will be paid for directly in accordance with Item 677, "ELIMINATING EXISTING PAVEMENT MARKINGS AND MARKERS," unless otherwise stated in the plans.
10. Black-out marking tape may be used to cover conflicting existing markings for periods less than two weeks when approved by the Engineer.

Temporary Flexible-Reflective Roadway Marker Tabs

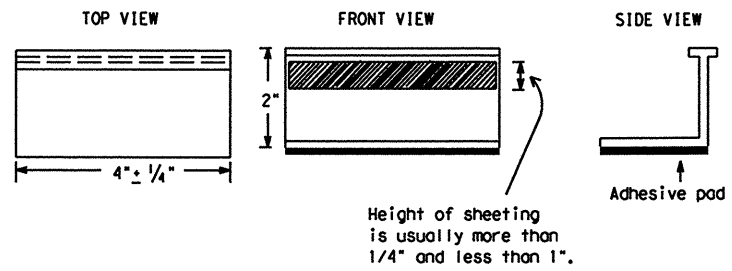

STAPLES OR NAILS SHALL NOT BE USED TO SECURE TEMPORARY FLEXIBLE-REFLECTIVE ROADWAY MARKER TABS TO THE PAVEMENT SURFACE

1. Temporary flexible-reflective roadway marker tabs used as guidemarks shall meet the requirements of DMS-8242.
2. Tabs detailed on this sheet are to be inspected and accepted by the Engineer or designated representative. Sampling and testing is not normally required, however at the option of the Engineer, either "A" or "B" below may be imposed to assure quality before placement on the roadway.
   A. Select five (5) or more tabs at random from each lot or shipment and submit to the Construction Division, Materials and Pavement Section to determine specification compliance.
   B. Select five (5) tabs and perform the following test. Affix five (5) tabs at 24 inch intervals on an asphaltic pavement in a straight line. Using a medium size passenger vehicle or pickup, run over the markers with the front and rear tires at a speed of 35 to 40 miles per hour, four (4) times in each direction. No more than one (1) out of the five (5) reflective surfaces shall be lost or displaced as a result of this test.
3. Small design variances may be noted between tab manufacturers.
4. See Standard Sheet WZ(STPM) for tab placement on new pavements. See Standard Sheet TCP(7-1) for tab placement on seal coat work.

Raised Pavement Markers used as Guidemarks

1. Raised pavement markers used as guidemarks shall be from the approved product list, and meet the requirements of DMS-4200.
2. All temporary construction raised pavement markers provided on a project shall be of the same manufacturer.
3. Adhesive for guidemarks shall be bituminous material hot applied or butyl rubber pad for all surfaces, or thermoplastic for concrete surfaces.

Guidemarks shall be designated as:
YELLOW - (two amber reflective surfaces with yellow body).
WHITE - (one silver reflective surface with white body).

DEPARTMENTAL MATERIAL SPECIFICATIONS

PAVEMENT MARKERS (REFLECTORIZED)	DMS-4200
TRAFFIC BUTTONS	DMS-4300
EPOXY AND ADHESIVES	DMS-6100
BITUMINOUS ADHESIVE FOR PAVEMENT MARKERS	DMS-6130
PREFABRICATED PAVEMENT MARKINGS-PERMANENT	DMS-8240
PREFABRICATED PAVEMENT MARKINGS-REMOVABLE	DMS-8241
TEMPORARY FLEXIBLE-REFLECTIVE ROADWAY MARKER TABS	DMS-8242

A list of prequalified reflective raised pavement markers, non-reflective traffic buttons, roadway marker tabs and other pavement markings can be found at the Material Producer List web address shown on BC(1).

DATE:
FILE:

Texas Department of Transportation
Traffic Operations Division

BARRICADE AND CONSTRUCTION PAVEMENT MARKINGS STANDARD

11 of 12 BC(11)-07

©TxDOT February 1998

REVISIONS	DN: TXDOT	CK: TXDOT	DW: TXDOT	CK: TXDOT
2-98	CONT	SECT	JOB	HIGHWAY
1-02	0027	09	099	US 90A
11-02	DIST	COUNTY		SHEET NO.
9-07	12	HARRIS		22

1098

DISCLAIMER: The use of this standard is governed by the "Texas Engineering Practice Act". No warranty of any kind is made by TxDOT for any purpose whatsoever. TxDOT assumes no responsibility for the conversion of this standard to other formats or for incorrect results or damages resulting from its use.

PAVEMENT MARKING PATTERNS

CENTER LINE & NO-PASSING ZONE BARRIER LINES FOR TWO-LANE, TWO-WAY HIGHWAYS

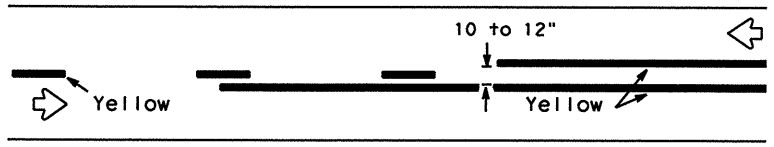

REFLECTORIZED PAVEMENT MARKINGS - PATTERN A

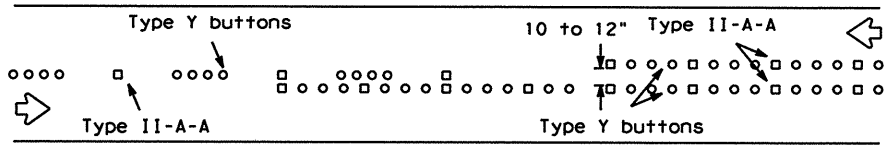

RAISED PAVEMENT MARKERS - PATTERN A

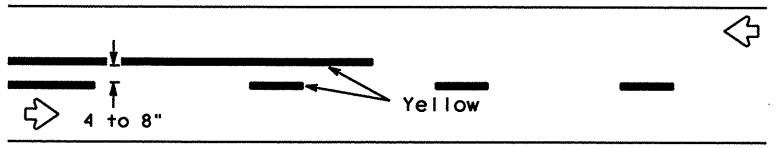

REFLECTORIZED PAVEMENT MARKINGS - PATTERN B

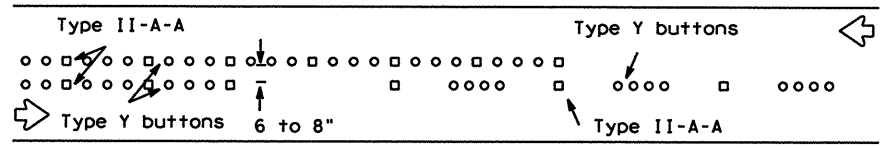

RAISED PAVEMENT MARKERS - PATTERN B

Pattern A is the TXDOT Standard, however Pattern B may be used if approved by the Engineer.
Prefabricated markings may be substituted for reflectorized pavement markings.

EDGE & LANE LINES FOR DIVIDED HIGHWAY

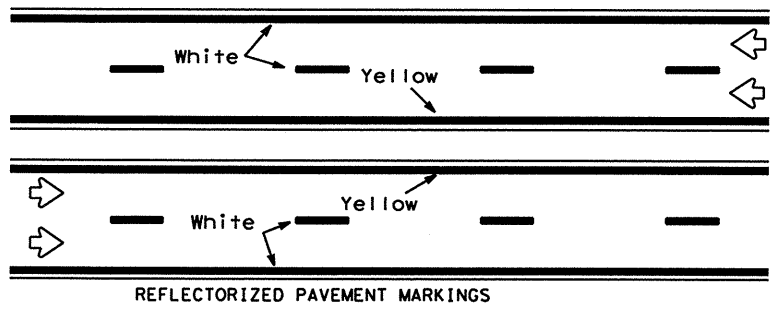

REFLECTORIZED PAVEMENT MARKINGS

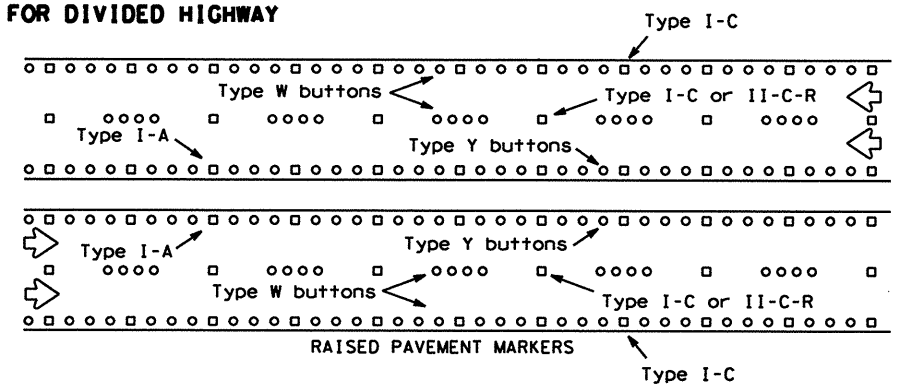

RAISED PAVEMENT MARKERS

Prefabricated markings may be substituted for reflectorized pavement markings.

LANE & CENTER LINES FOR MULTILANE UNDIVIDED HIGHWAYS

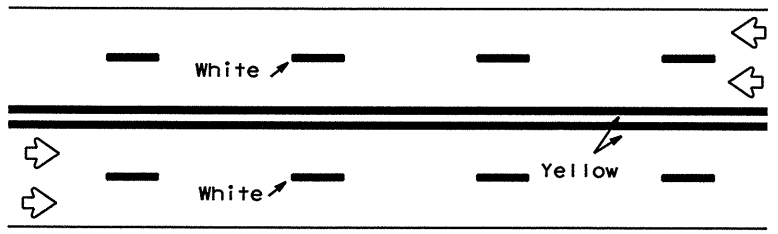

REFLECTORIZED PAVEMENT MARKINGS

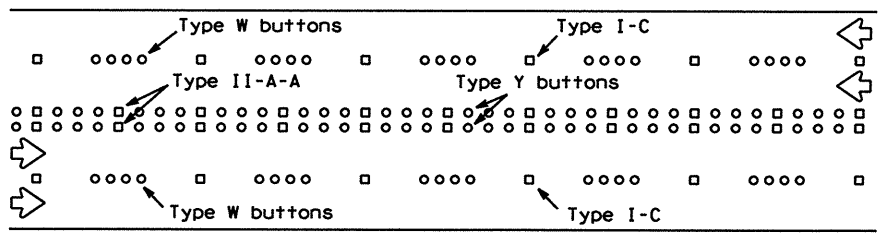

RAISED PAVEMENT MARKERS

Prefabricated markings may be substituted for reflectorized pavement markings.

TWO-WAY LEFT TURN LANE

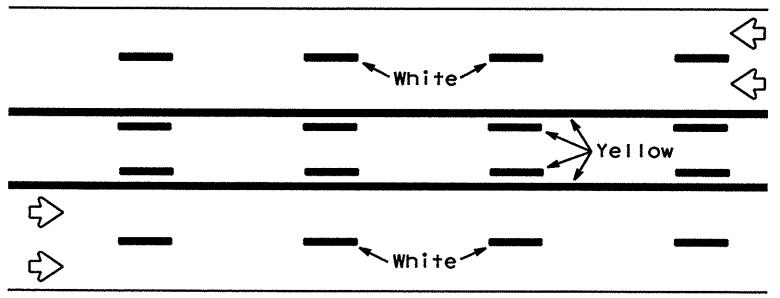

REFLECTORIZED PAVEMENT MARKINGS

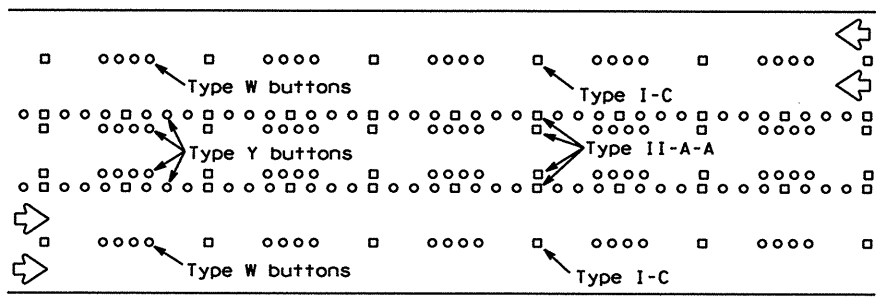

RAISED PAVEMENT MARKERS

Prefabricated markings may be substituted for reflectorized pavement markings.

DATE:
FILE:

STANDARD WORK ZONE PAVEMENT MARKINGS DETAILS

SOLID LINES

DOUBLE NO-PASSING LINE

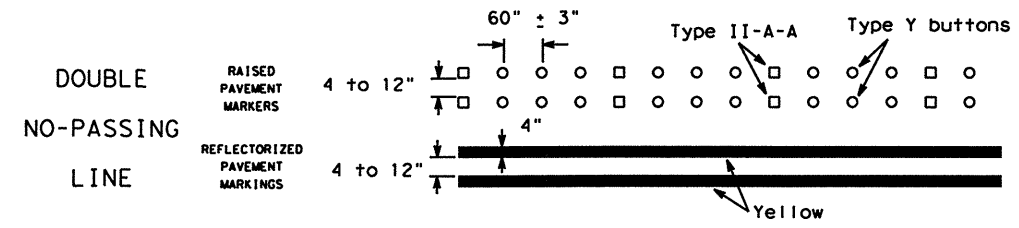

EDGE LINE OR SINGLE NO-PASSING LINE

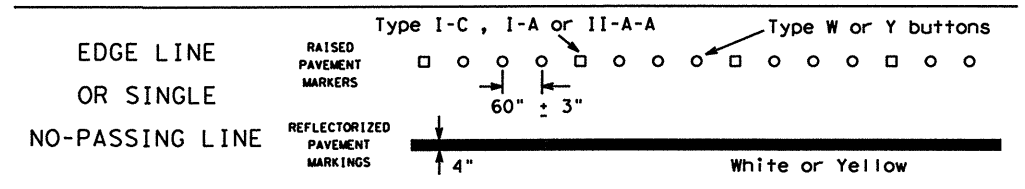

WIDE LINE

(FOR LEFT TURN CHANNELIZING LINE OR CHANNELIZING LINE USED TO DISCOURAGE LANE CHANGING.)

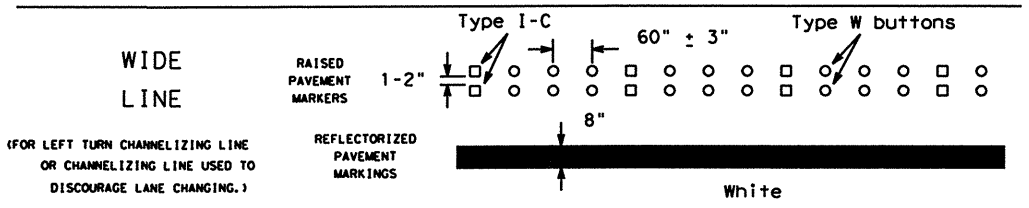

BROKEN LINE

(FOR CENTER LINE OR LANE LINE.)

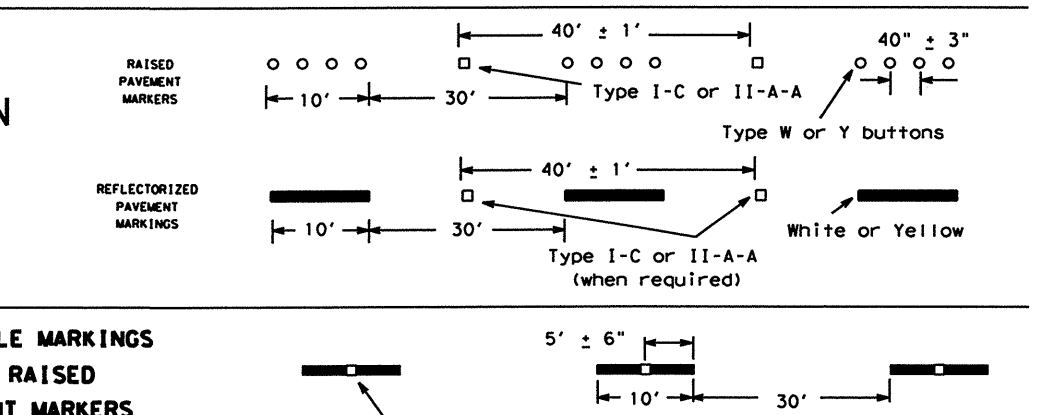

REMOVABLE MARKINGS WITH RAISED PAVEMENT MARKERS

If raised pavement markers are used to supplement REMOVABLE markings, the markers shall be applied to the top of the tape at the approximate mid length of tape used for broken lines or at 20 foot spacing for solid lines. This allows an easier removal of raised pavement markers and tape.

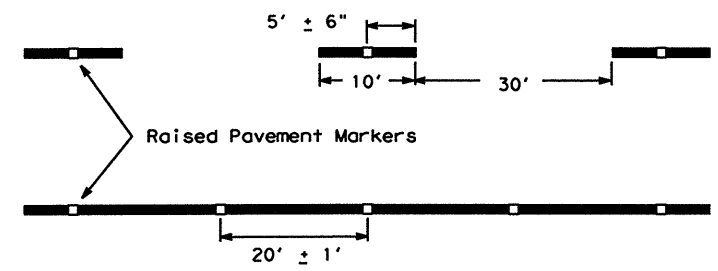

Centerline only - not to be used on edge lines

Raised pavement markers used as standard pavement markings shall be from the approved products list and meet the requirements of Item 672 "RAISED PAVEMENT MARKERS."

Texas Department of Transportation
Traffic Operations Division

BARRICADE AND CONSTRUCTION PAVEMENT MARKING PATTERNS STANDARD

12 of 12 BC(12)-07

©TxDOT February 1998

DN: TXDOT	CK: TXDOT	DW: TXDOT	CK: TXDOT

REVISIONS	CONT	SECT	JOB	HIGHWAY
1-97	0027	09	099	US 90A
2-98	DIST	COUNTY		SHEET NO.
11-02	12	HARRIS		23
9-07				

109CT

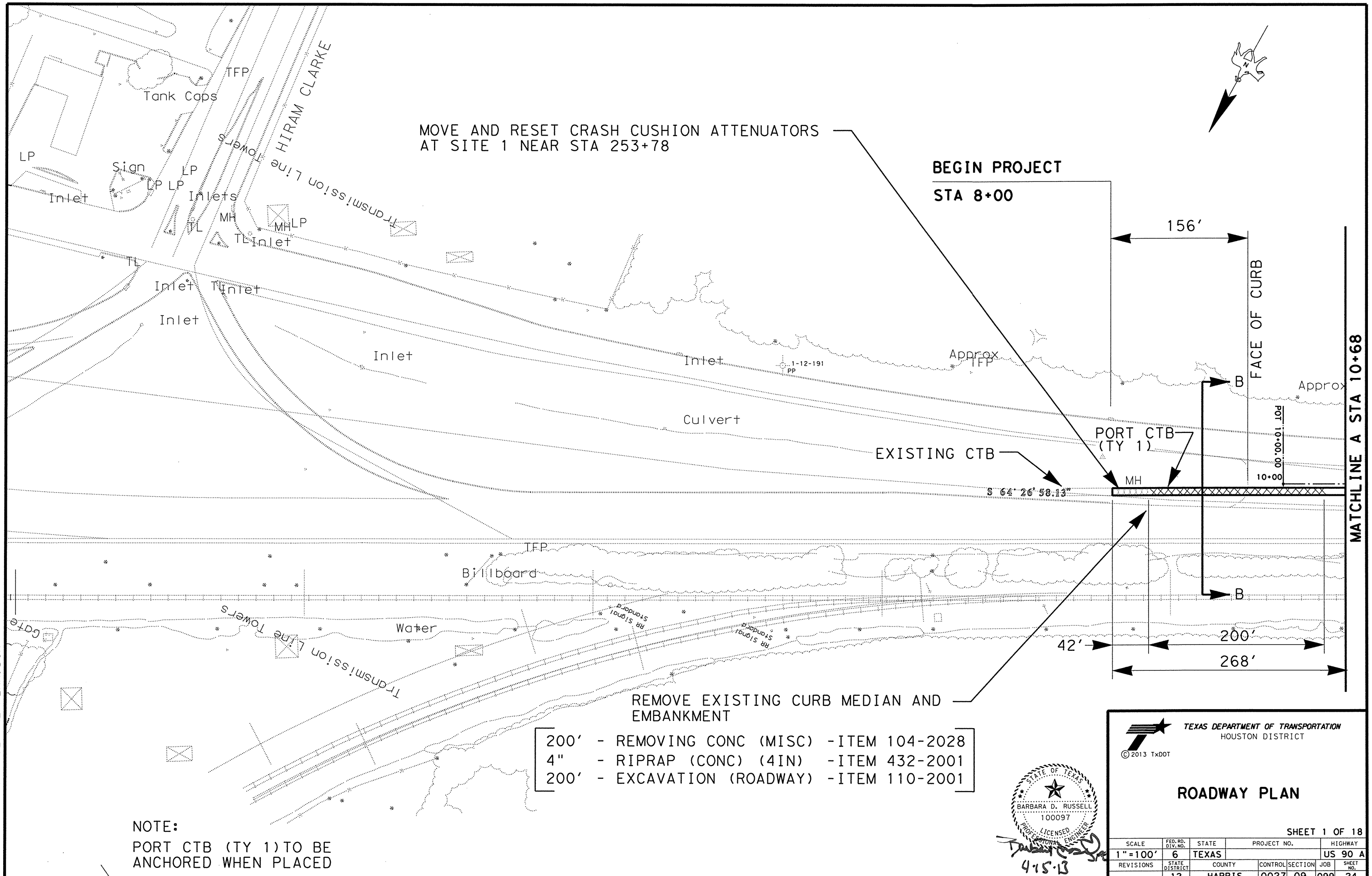

TEXAS DEPARTMENT OF TRANSPORTATION
HOUSTON DISTRICT

© 2013 TxDOT

STATE OF TEXAS
BARBARA D. RUSSELL
100097
LICENSED
PROFESSIONAL ENGINEER
4-15-13

ROADWAY PLAN

SHEET 1 OF 18

SCALE	FED. RD. DIV. NO.	STATE	PROJECT NO.			HIGHWAY
1"=100'	6	TEXAS				US 90 A
REVISIONS	STATE DISTRICT	COUNTY	CONTROL	SECTION	JOB	SHEET NO.
	12	HARRIS	0027	09	099	24

FILE: US90A@HIRAMCLARKE*PLAN.DGN

MATCHLINE A STA 10+68

MATCHLINE B STA 25+74

Dense Woods

1-12-190 PP

1-12-189 PP

LP

Paved Parking

TFP

Inlet

Gate

Sign

Culvert

MH

A

RR Crossing Sign

15+00

S 64° 26' 58.13" W

20+00

PI 22+94.42

PC 25+69.25

S 64° 27' 07.88" W

25+00

PORT CTB (TY 1)

RELOCATED SPEED LIMIT SIGN TO SITE 2 ITEM 644-2058

Billboard

SITE 2 (MOUNT EXIST. SPEED LIMIT SIGN TO CTB)

1506'

Marsh

FILE: US90A@HIRAMCLARKE*PLAN.DGN

© 2013 TxDOT

TEXAS DEPARTMENT OF TRANSPORTATION
HOUSTON DISTRICT

ROADWAY PLAN

STATE OF TEXAS
BARBARA D. RUSSELL
100097
LICENSED PROFESSIONAL ENGINEER

4.15.13

SHEET 2 OF 18

SCALE	FED.RD. DIV.NO.	STATE	PROJECT NO.			HIGHWAY
1"=100'	6	TEXAS				US 90 A
REVISIONS	STATE DISTRICT	COUNTY	CONTROL	SECTION	JOB	SHEET NO.
	12	HARRIS	0027	09	099	25

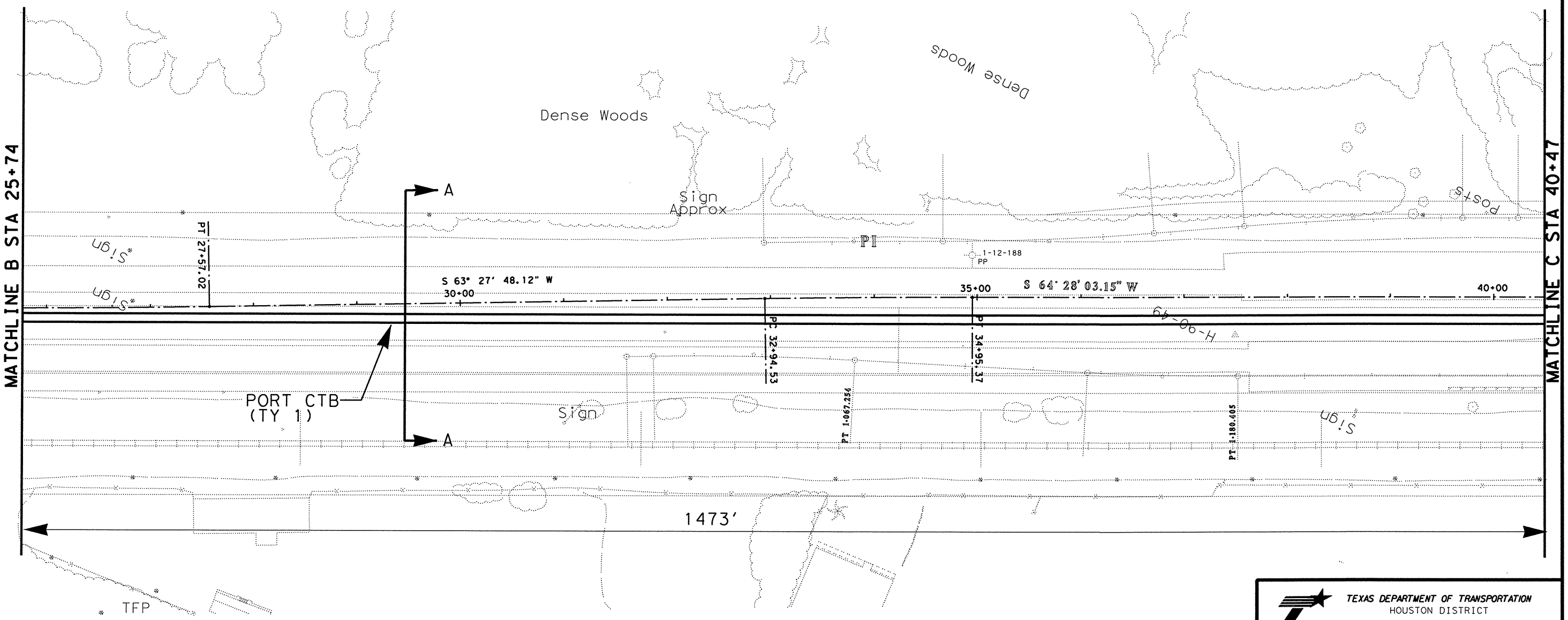
MATCHLINE B STA 25+74
MATCHLINE C STA 40+47
Dense Woods
Dense Woods
Sign Approx
PI
1-12-188
PP
PT 27+57.02
S 63° 27' 48.12" W
30+00
35+00
S 64° 28' 03.15" W
40+00
64-06-H
PC 32+94.53
PT 34+95.37
PT 1+067.256
PT 3+180.405
PORT CTB
(TY 1)
A
A
1473'
TFP
Sign
Sign
Sign

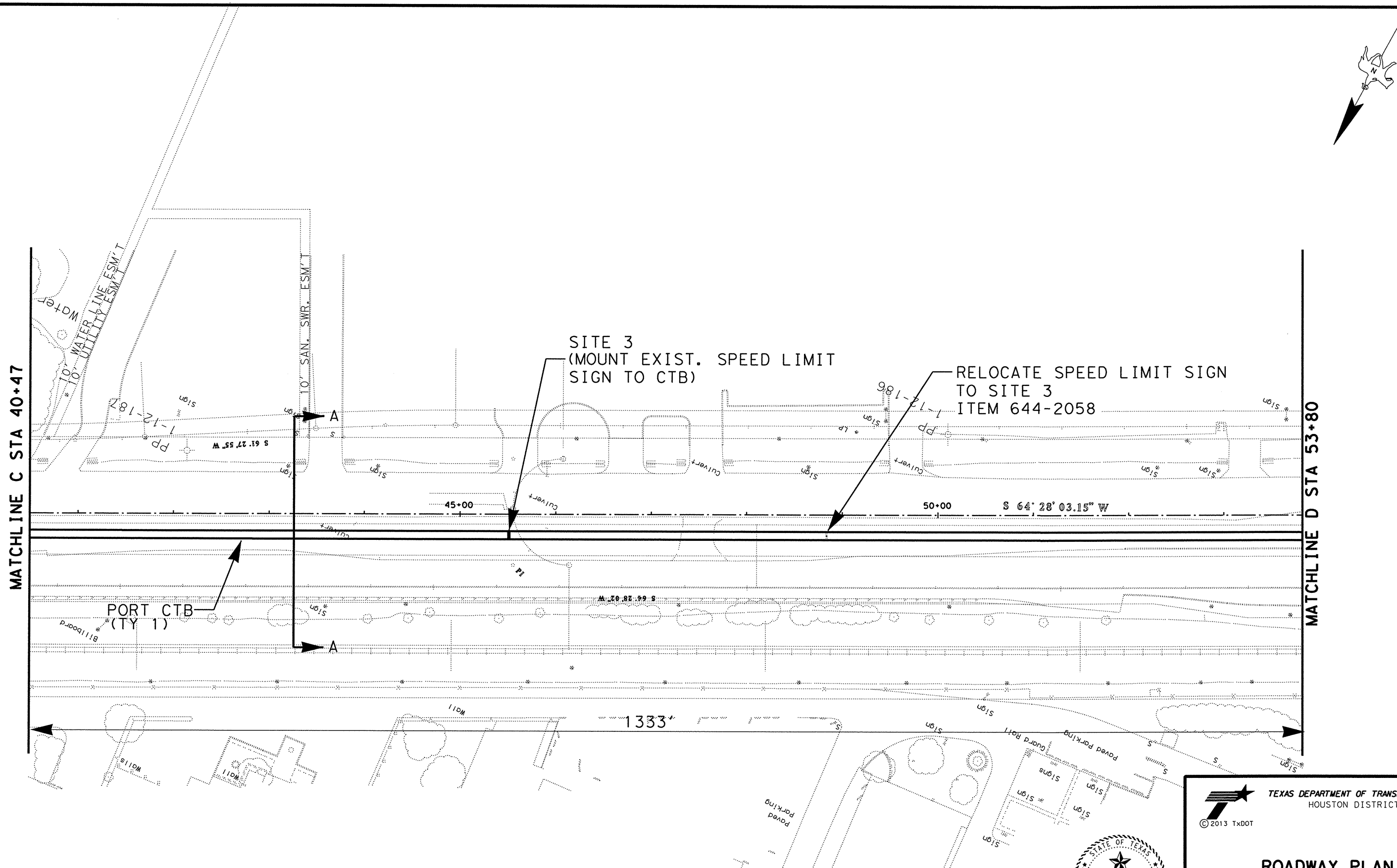

FILE: US90A@HIRAMCLARKE*PLAN.DGN

TEXAS DEPARTMENT OF TRANSPORTATION
HOUSTON DISTRICT

© 2013 TxDOT

ROADWAY PLAN

SHEET 4 OF 18

SCALE	FED. RD. DIV. NO.	STATE	PROJECT NO.			HIGHWAY
1"=100'	6	TEXAS				US 90 A
REVISIONS	STATE DISTRICT	COUNTY	CONTROL	SECTION	JOB	SHEET NO.
	12	HARRIS	0027	09	099	27

STATE OF TEXAS
BARBARA D. RUSSELL
100097
LICENSED
PROFESSIONAL ENGINEER

4·15·13

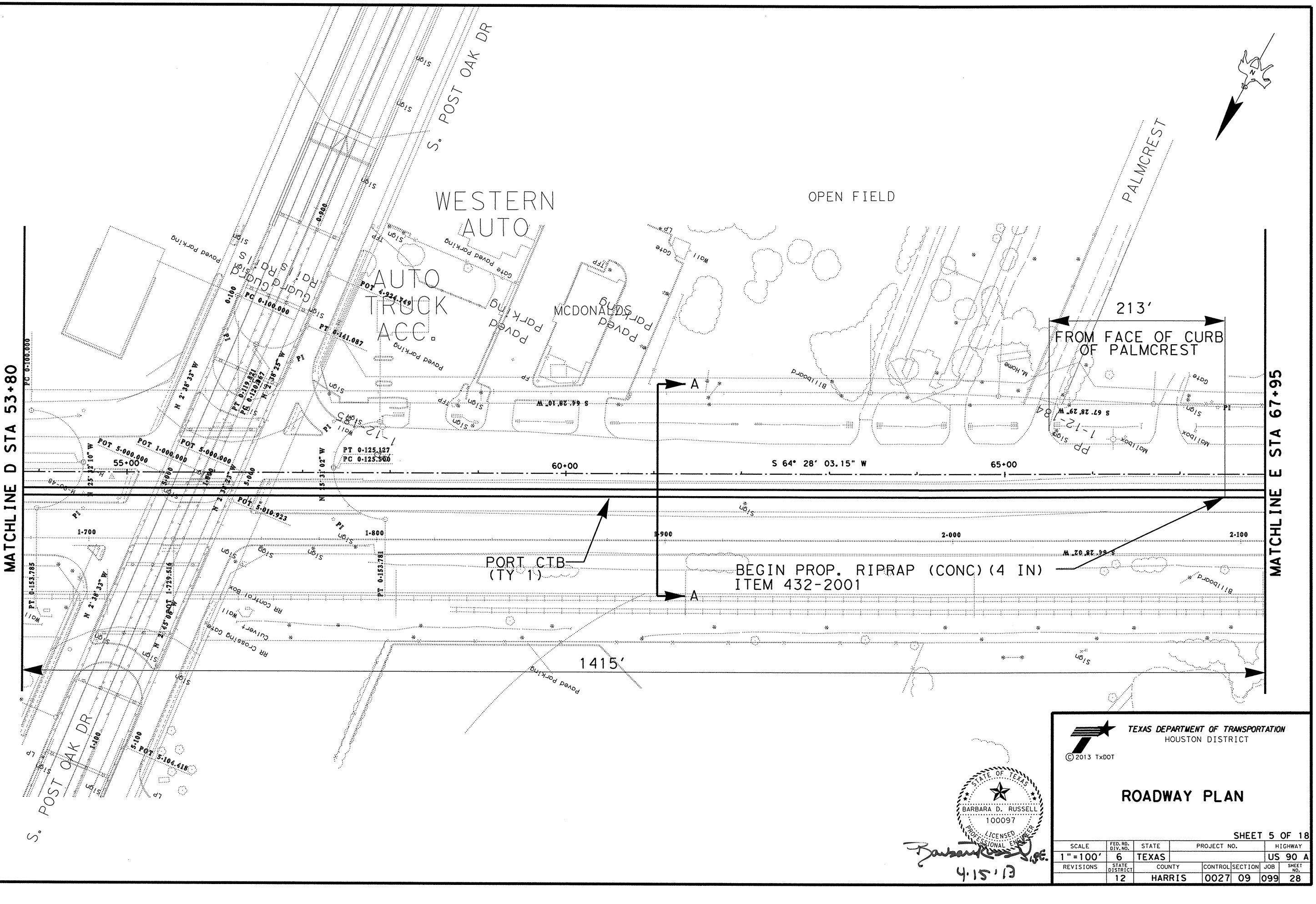

FILE: US90A@HIRAMCLARKE*PLAN.DGN

©2013 TxDOT

TEXAS DEPARTMENT OF TRANSPORTATION
HOUSTON DISTRICT

STATE OF TEXAS
BARBARA D. RUSSELL
100097
LICENSED PROFESSIONAL ENGINEER
4.15.13

ROADWAY PLAN

SHEET 5 OF 18

SCALE	FED. RD. DIV. NO.	STATE	PROJECT NO.			HIGHWAY
1"=100'	6	TEXAS				US 90 A
REVISIONS	STATE DISTRICT	COUNTY	CONTROL	SECTION	JOB	SHEET NO.
	12	HARRIS	0027	09	099	28

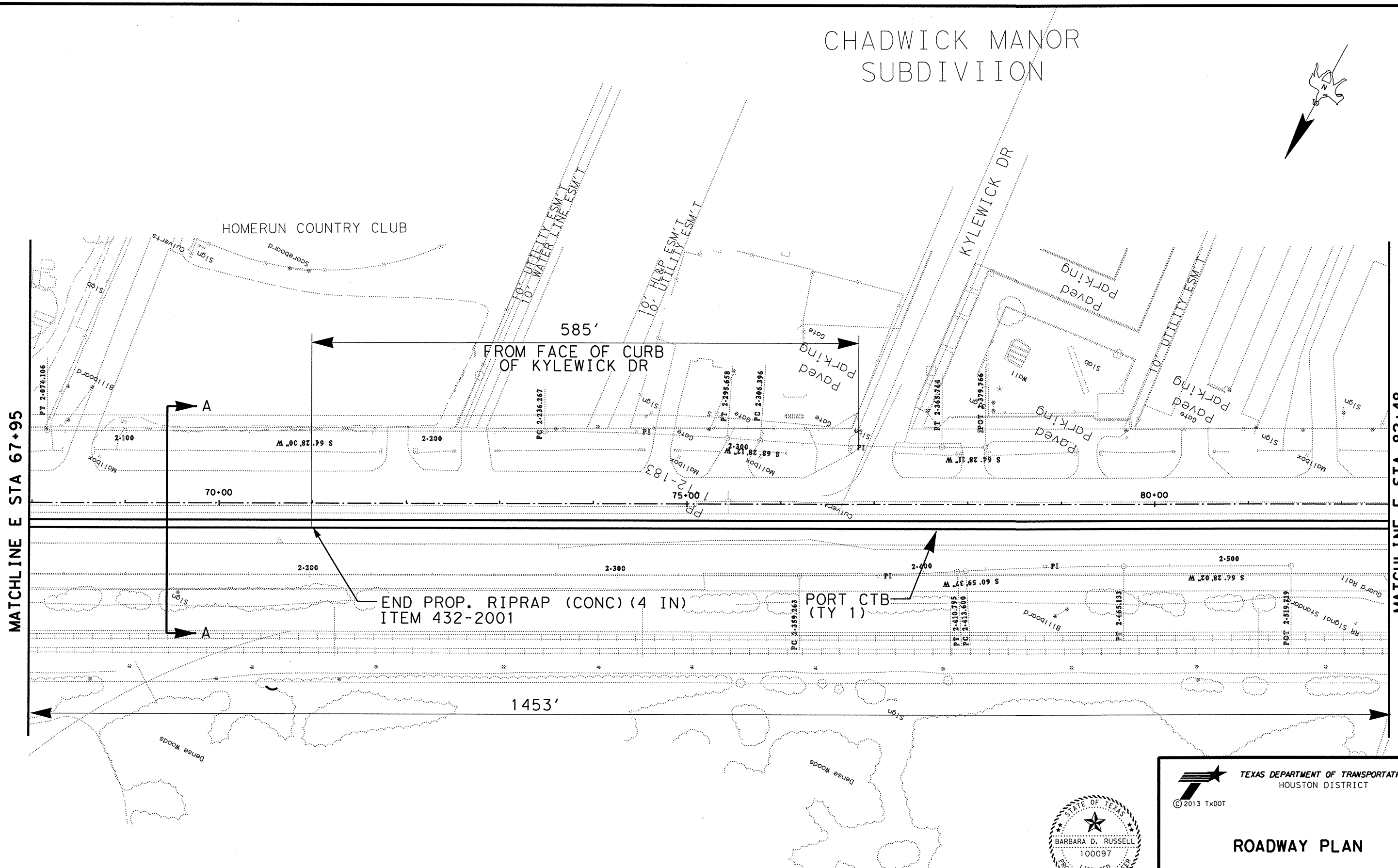

FILE: US90A@HIRAMCLARKE*PLAN.DGN

TEXAS DEPARTMENT OF TRANSPORTATION
HOUSTON DISTRICT

© 2013 TxDOT

STATE OF TEXAS
BARBARA D. RUSSELL
100097
LICENSED
PROFESSIONAL ENGINEER

4.15.13

ROADWAY PLAN

SHEET 6 OF 18

SCALE	FED. RD. DIV. NO.	STATE	PROJECT NO.			HIGHWAY
1"=100'	6	TEXAS				US 90 A
REVISIONS	STATE DISTRICT	COUNTY	CONTROL	SECTION	JOB	SHEET NO.
	12	HARRIS	0027	09	099	29

MATCHLINE F STA 82+48

MATCHLINE G STA 97+14

SITE 4
(MOUNT EXIST. SPEED LIMIT
SIGN TO CTB)

RELOCATE SPEED LIMIT SIGN
TO SITE 4
ITEM 644-2058

PORT CTB
(TY 1)

A

A

S 64° 28' 03.15" W

S 62° 07' 24.61" W

S 57° 44' 34" W

PC 0+761.919

PC 0+791.21

PT 0+841.743
PCC 0+843.861

PI
0+800

PI
0+900

PCC 0+902.584

PC 95+48.05

PC 96+65.97

85+00

90+00

95+00

1466'

US BOLT

Paved Parking

A/C Paved Parking

Gate

Gate

Gate

FILE: US90A@HIRAMCLARKE*PLAN.DGN

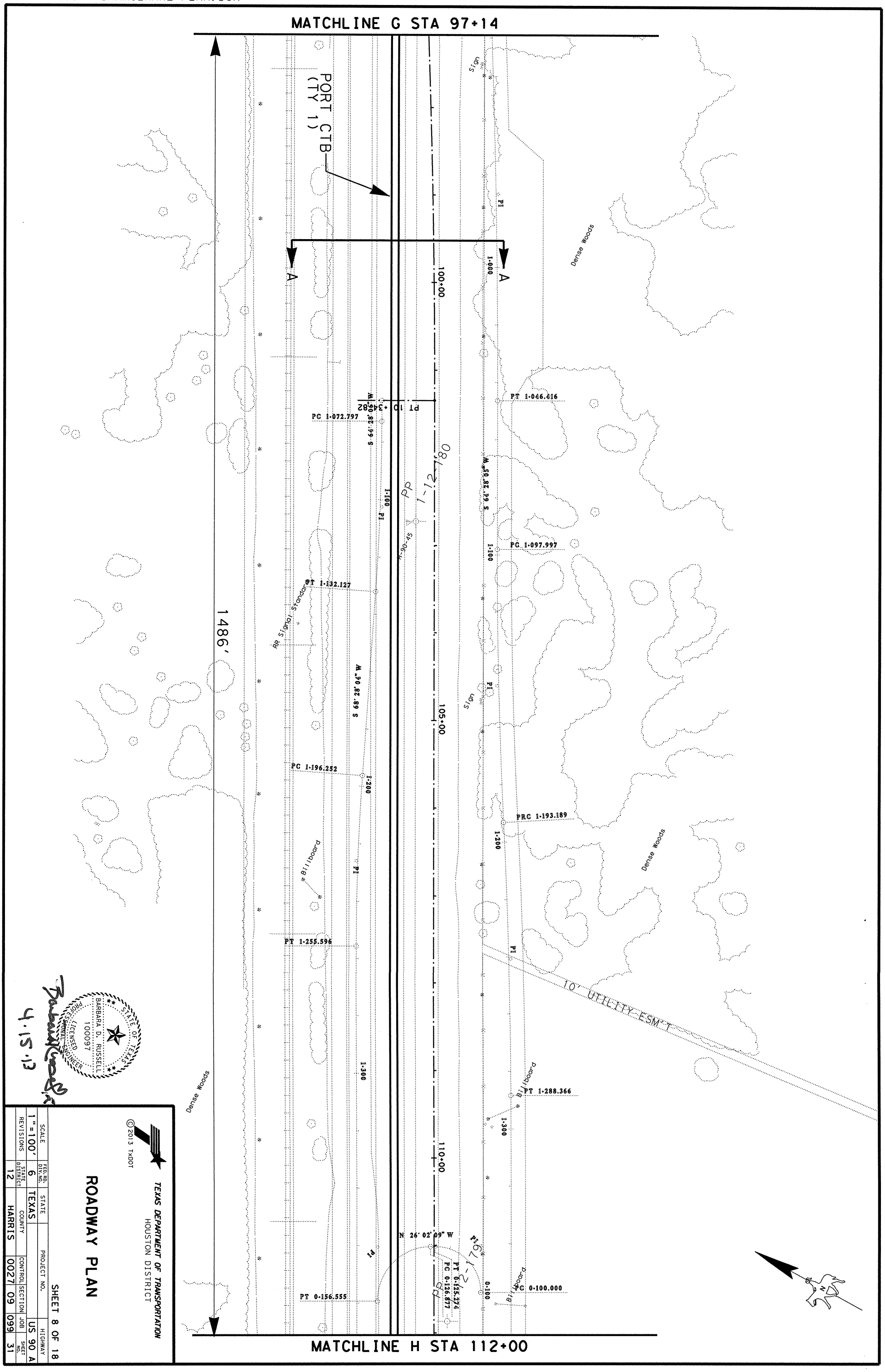

STATE OF TEXAS
BARBARA D. RUSSELL
100097
LICENSED
PROFESSIONAL ENGINEER

4.15.13

TEXAS DEPARTMENT OF TRANSPORTATION
HOUSTON DISTRICT

© 2013 TxDOT

ROADWAY PLAN

SHEET 8 OF 18

SCALE	FED. RD. DIV. NO.	STATE	PROJECT NO.	HIGHWAY
1"=100'	6	TEXAS		US 90 A

REVISIONS	STATE DISTRICT	COUNTY	CONTROL	SECTION	JOB	SHEET NO.
	12	HARRIS	0027	09	099	31

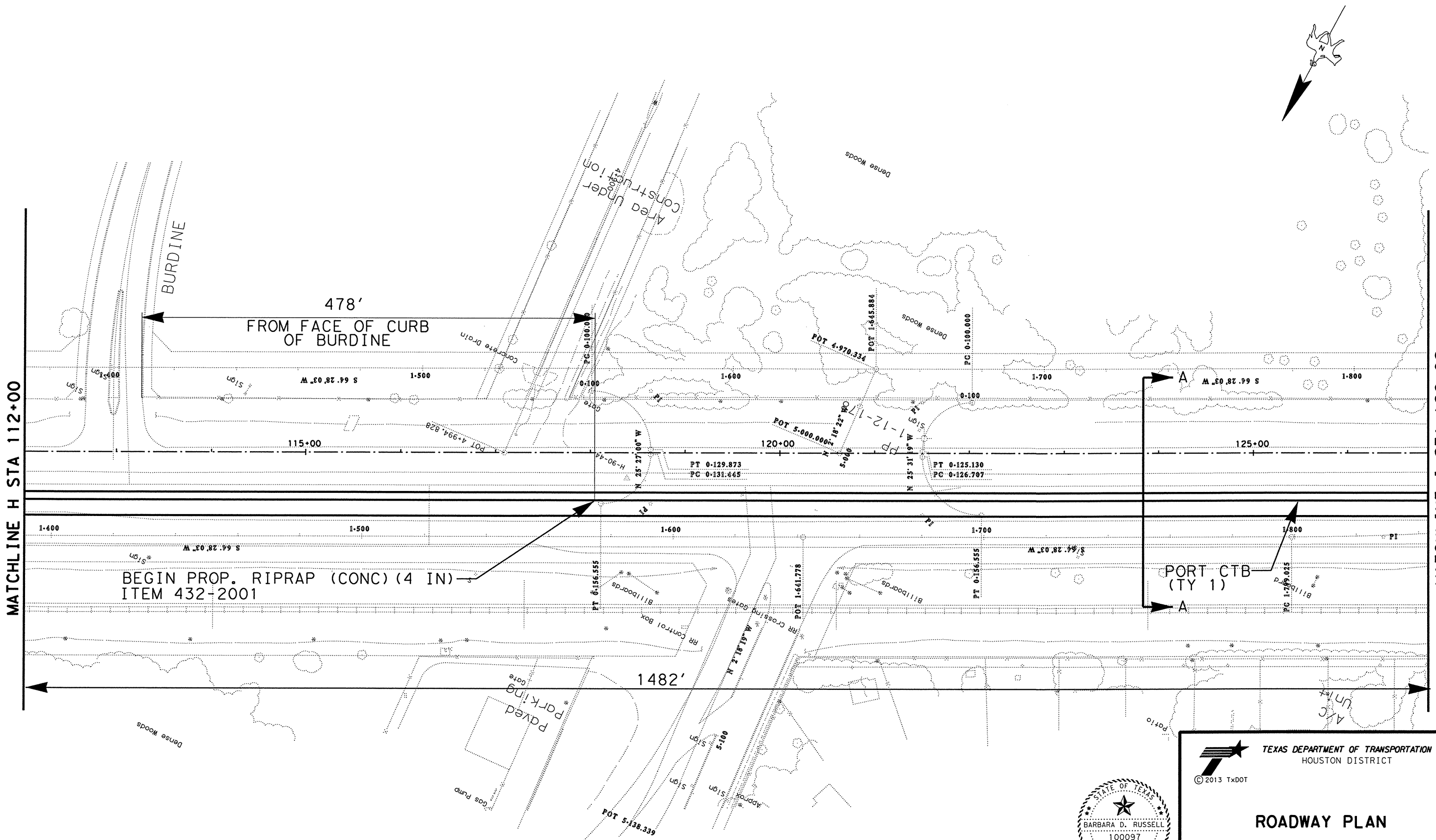

TEXAS DEPARTMENT OF TRANSPORTATION
HOUSTON DISTRICT

© 2013 TxDOT

STATE OF TEXAS
BARBARA D. RUSSELL
100097
LICENSED
PROFESSIONAL ENGINEER

Barbara D. Russell, P.E.
4-15-13

ROADWAY PLAN

SHEET 9 OF 18

SCALE	FED. RD. DIV. NO.	STATE	PROJECT NO.			HIGHWAY
1"=100'	6	TEXAS				US 90 A
REVISIONS	STATE DISTRICT	COUNTY	CONTROL	SECTION	JOB	SHEET NO.
	12	HARRIS	0027	09	099	32

FILE: US90A@HIRAMCLARKE*PLAN.DGN

FILE: US90A@HIRAMCLARKE*PLAN.DGN

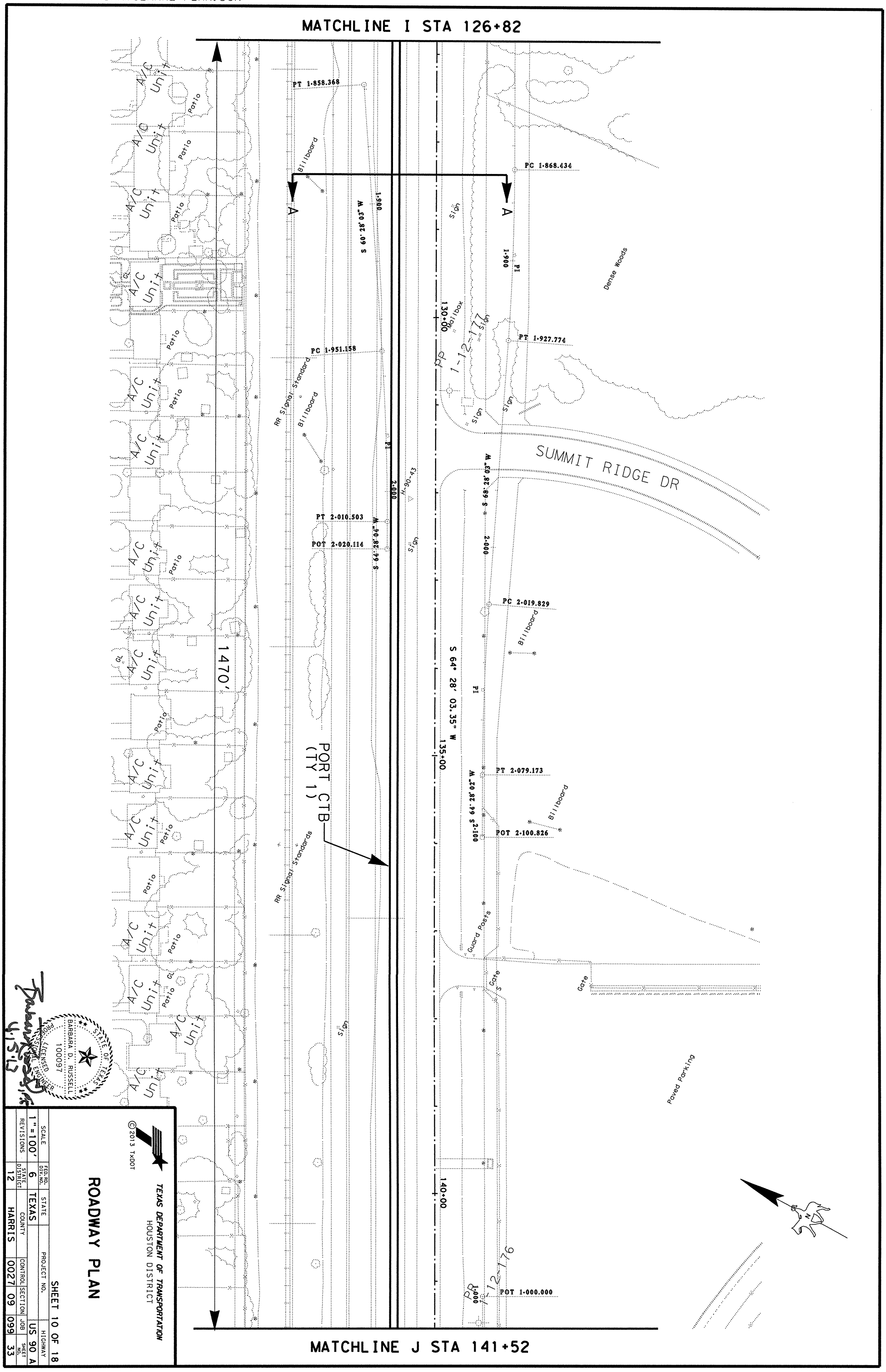

TEXAS DEPARTMENT OF TRANSPORTATION
HOUSTON DISTRICT

© 2013 TxDOT

ROADWAY PLAN

SHEET 10 OF 18

SCALE	FED. RD. DIV. NO.	STATE	PROJECT NO.	HIGHWAY
1"=100'	6	TEXAS		US 90 A

REVISIONS	STATE DISTRICT	COUNTY	CONTROL	SECTION	JOB	SHEET NO.
	12	HARRIS	0027	09	099	33

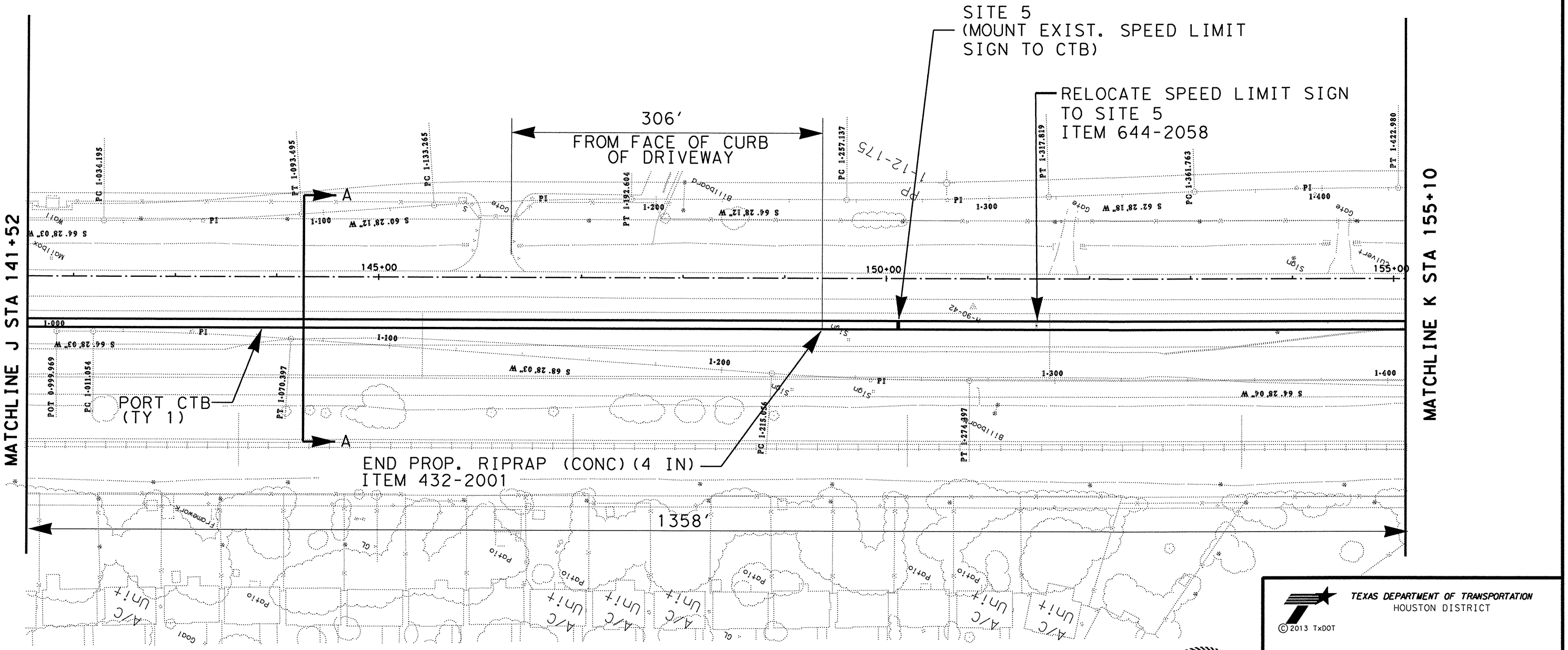

FILE: US90A@HIRAMCLARKE*PLAN.DGN

© 2013 TxDOT

TEXAS DEPARTMENT OF TRANSPORTATION
HOUSTON DISTRICT

ROADWAY PLAN

SHEET 11 OF 18

SCALE	FED. RD. DIV. NO.	STATE	PROJECT NO.			HIGHWAY
1"=100'	6	TEXAS				US 90 A
REVISIONS	STATE DISTRICT	COUNTY	CONTROL	SECTION	JOB	SHEET NO.
	12	HARRIS	0027	09	099	34

STATE OF TEXAS
BARBARA D. RUSSELL
100097
LICENSED
PROFESSIONAL ENGINEER
4·15·13

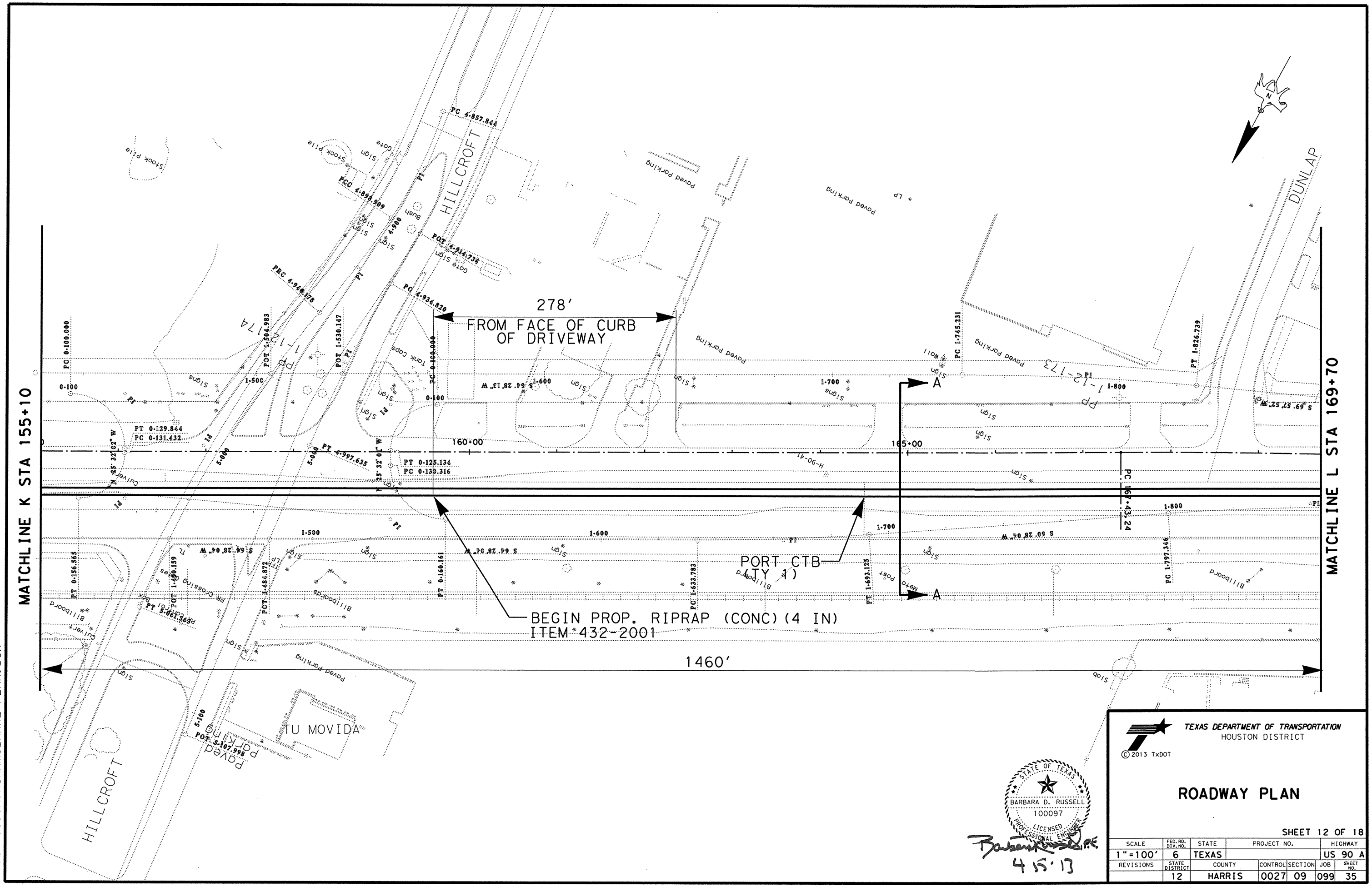

FILE: US90A@HIRAMCLARKE*PLAN.DGN

TEXAS DEPARTMENT OF TRANSPORTATION
HOUSTON DISTRICT

© 2013 TxDOT

ROADWAY PLAN

SHEET 12 OF 18

SCALE	FED. RD. DIV. NO.	STATE	PROJECT NO.			HIGHWAY
1"=100'	6	TEXAS				US 90 A
REVISIONS	STATE DISTRICT	COUNTY	CONTROL	SECTION	JOB	SHEET NO.
	12	HARRIS	0027	09	099	35

STATE OF TEXAS
BARBARA D. RUSSELL
100097
LICENSED
PROFESSIONAL ENGINEER

Barbara Russell P.E.
4 15 13

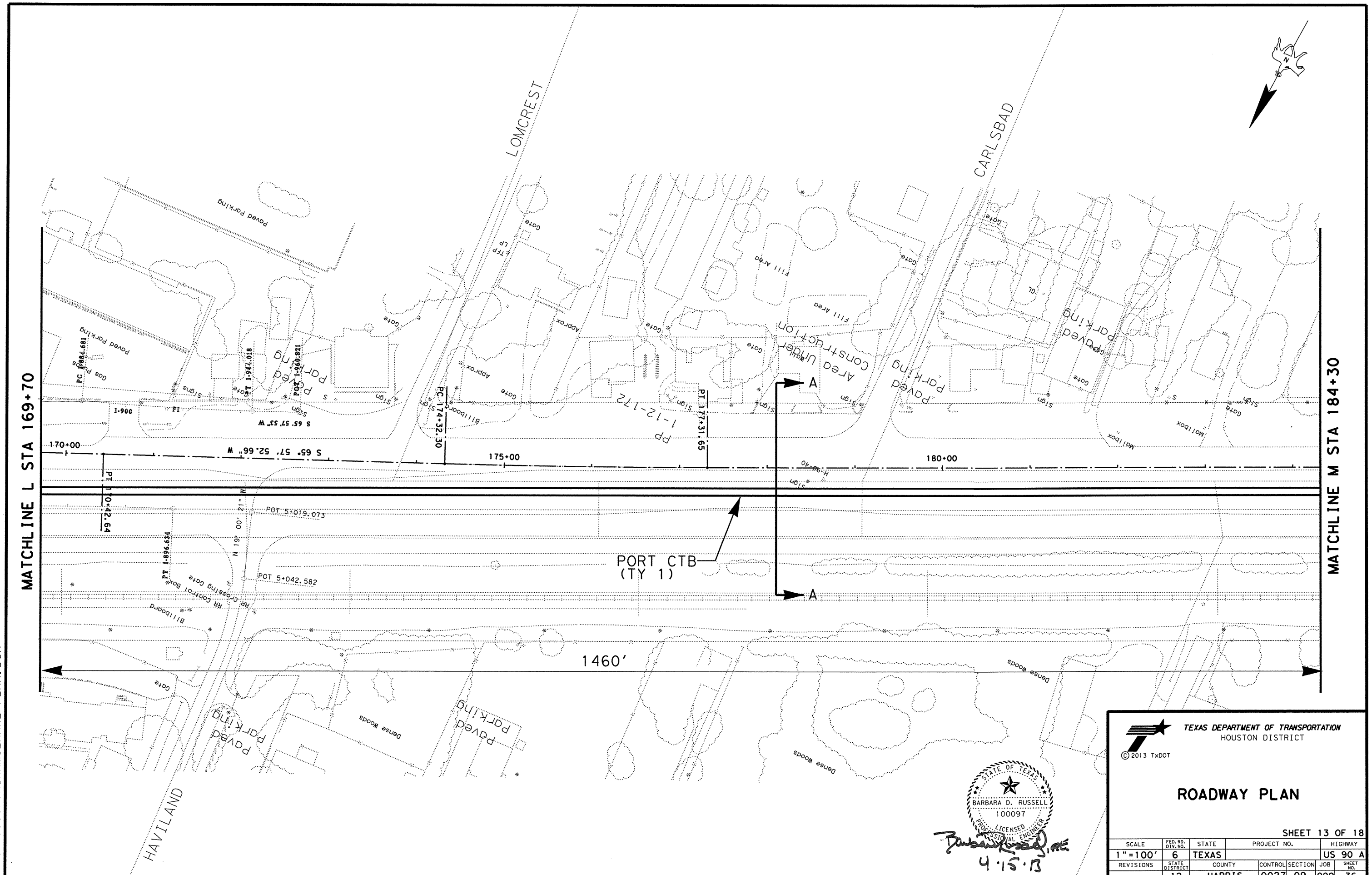

FILE: US90A@HIRAMCLARKE*PLAN.DGN

STATE OF TEXAS
BARBARA D. RUSSELL
100097
LICENSED
PROFESSIONAL ENGINEER

4·15·13

TEXAS DEPARTMENT OF TRANSPORTATION
HOUSTON DISTRICT

© 2013 TxDOT

ROADWAY PLAN

SHEET 13 OF 18

SCALE	FED. RD. DIV. NO.	STATE	PROJECT NO.			HIGHWAY
1"=100'	6	TEXAS				US 90 A
REVISIONS	STATE DISTRICT	COUNTY	CONTROL	SECTION	JOB	SHEET NO.
	12	HARRIS	0027	09	099	36

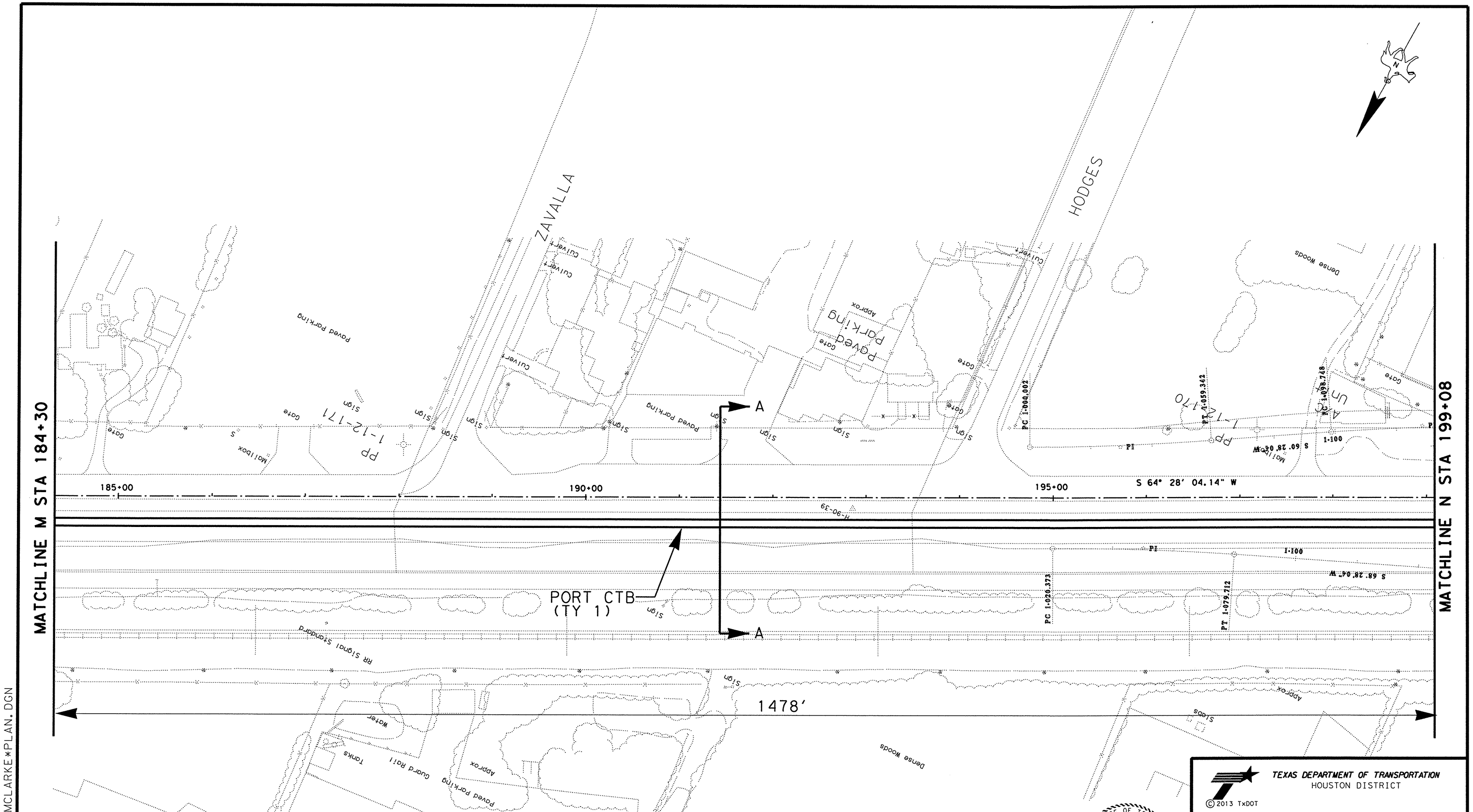

FILE: US90A@HIRAMCLARKE*PLAN.DGN

TEXAS DEPARTMENT OF TRANSPORTATION
HOUSTON DISTRICT

© 2013 TxDOT

STATE OF TEXAS
BARBARA D. RUSSELL
100097
LICENSED
PROFESSIONAL ENGINEER

Barbara Russell, P.E.
4·15·13

ROADWAY PLAN

SHEET 14 OF 18

SCALE	FED. RD. DIV. NO.	STATE	PROJECT NO.			HIGHWAY
1"=100'	6	TEXAS				US 90 A
REVISIONS	STATE DISTRICT	COUNTY	CONTROL	SECTION	JOB	SHEET NO.
	12	HARRIS	0027	09	099	37

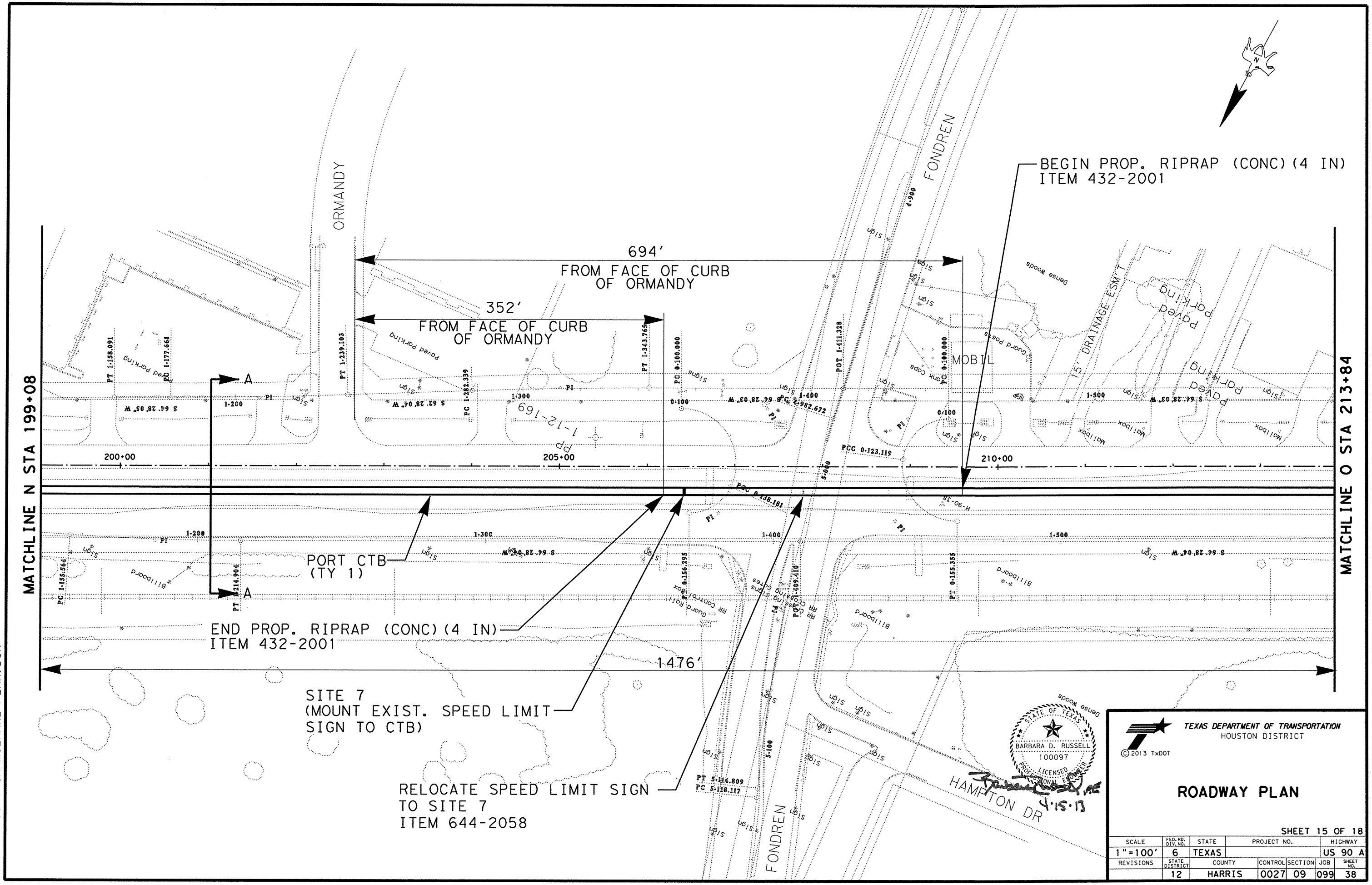

TEXAS DEPARTMENT OF TRANSPORTATION
HOUSTON DISTRICT

© 2013 TxDOT

ROADWAY PLAN

SHEET 15 OF 18

SCALE	FED. RD. DIV. NO.	STATE	PROJECT NO.			HIGHWAY
1"=100'	6	TEXAS				US 90 A
REVISIONS	STATE DISTRICT	COUNTY	CONTROL	SECTION	JOB	SHEET NO.
	12	HARRIS	0027	09	099	38

FILE: US90A@HIRAMCLARKE*PLAN.DGN

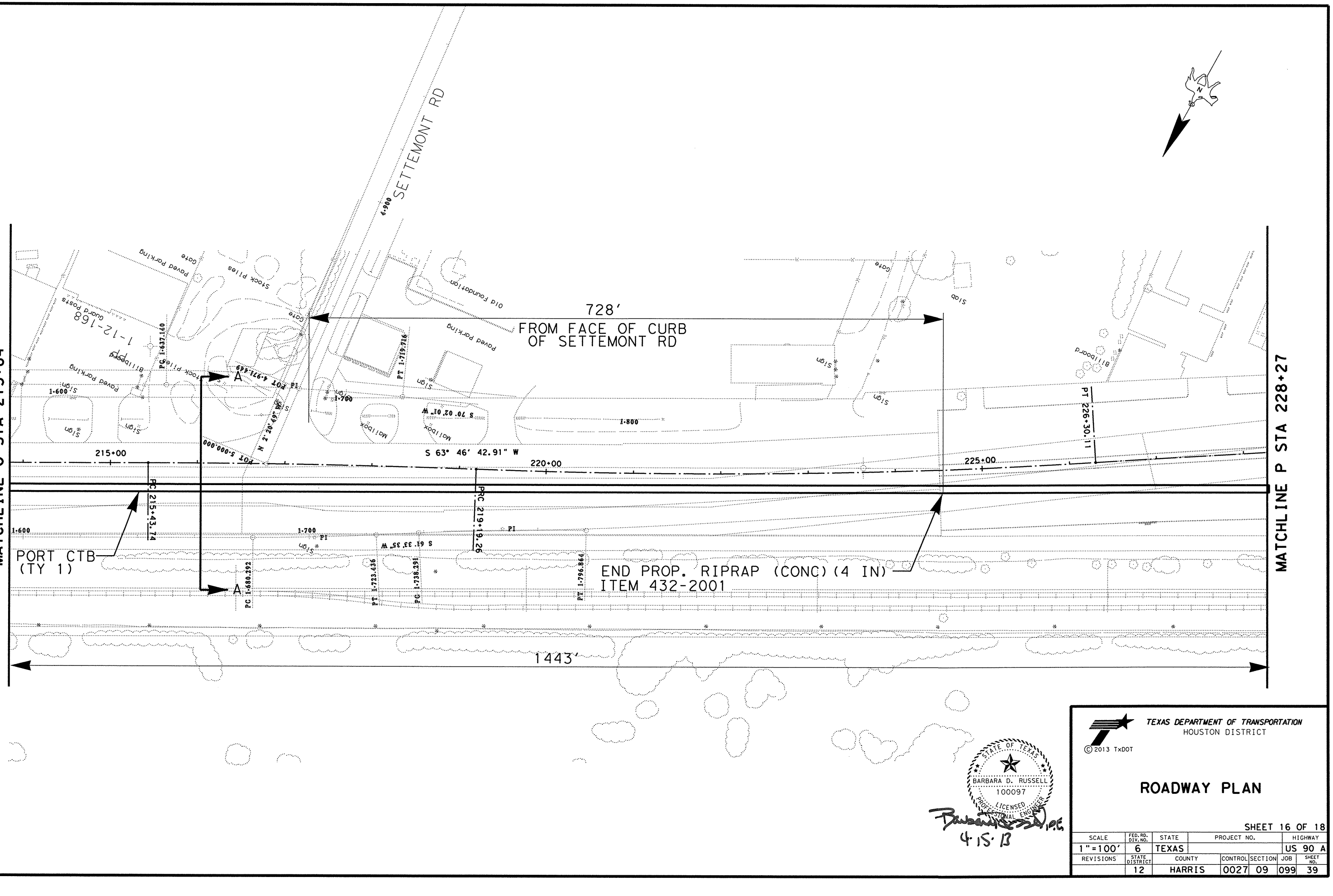

© 2013 TxDOT

TEXAS DEPARTMENT OF TRANSPORTATION
HOUSTON DISTRICT

ROADWAY PLAN

BARBARA D. RUSSELL
100097
LICENSED
PROFESSIONAL ENGINEER
STATE OF TEXAS
4-15-13

SHEET 16 OF 18

SCALE	FED. RD. DIV. NO.	STATE	PROJECT NO.			HIGHWAY
1"=100'	6	TEXAS				US 90 A
REVISIONS	STATE DISTRICT	COUNTY	CONTROL	SECTION	JOB	SHEET NO.
	12	HARRIS	0027	09	099	39

FILE: US90A@HIRAMCLARKE*PLAN.DGN

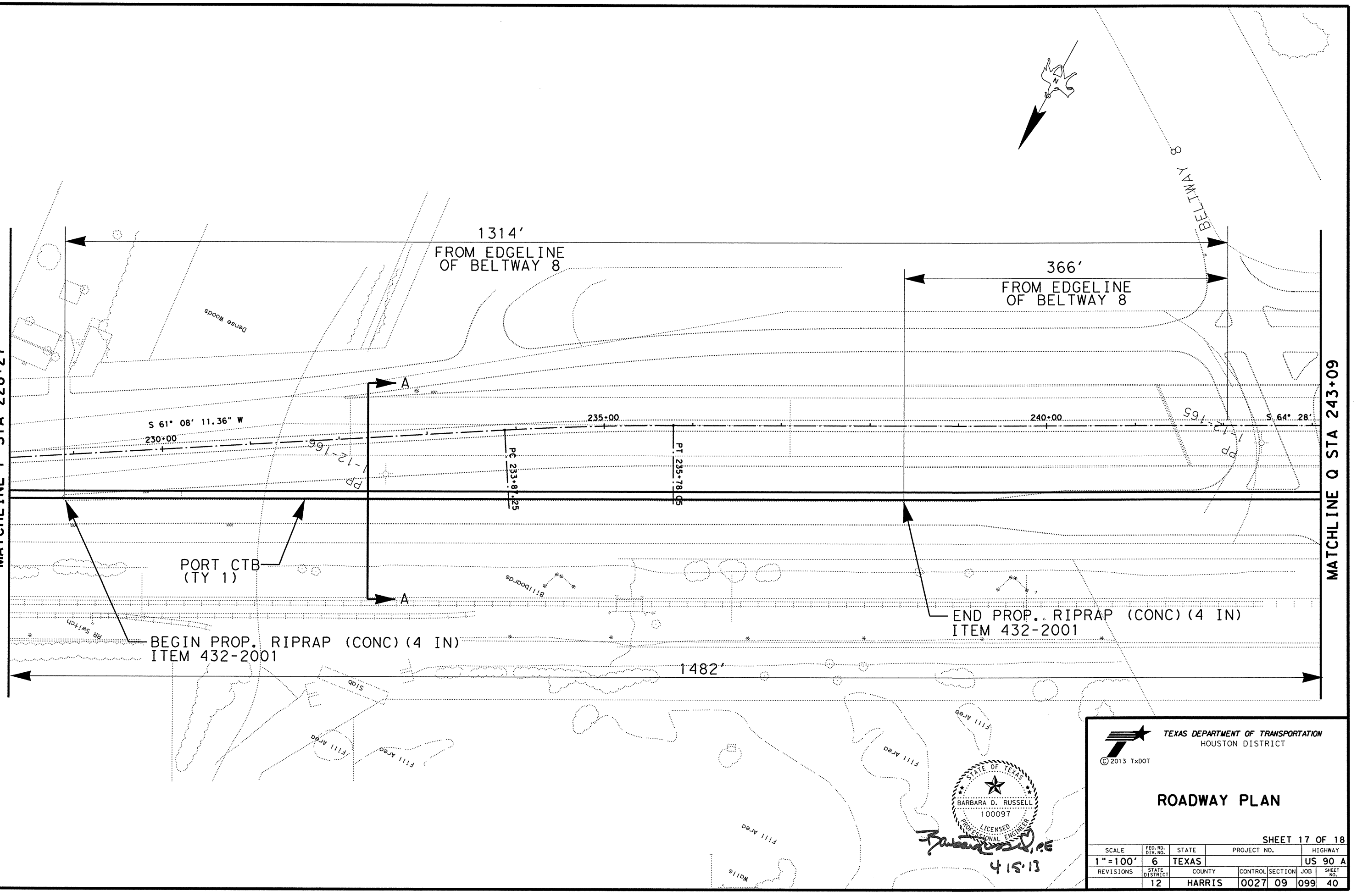

© 2013 TxDOT

TEXAS DEPARTMENT OF TRANSPORTATION
HOUSTON DISTRICT

ROADWAY PLAN

SHEET 17 OF 18

SCALE	FED.RD. DIV.NO.	STATE	PROJECT NO.			HIGHWAY
1"=100'	6	TEXAS				US 90 A
REVISIONS	STATE DISTRICT	COUNTY	CONTROL	SECTION	JOB	SHEET NO.
	12	HARRIS	0027	09	099	40

FILE: US90A@HIRAMCLARKE*PLAN.DGN

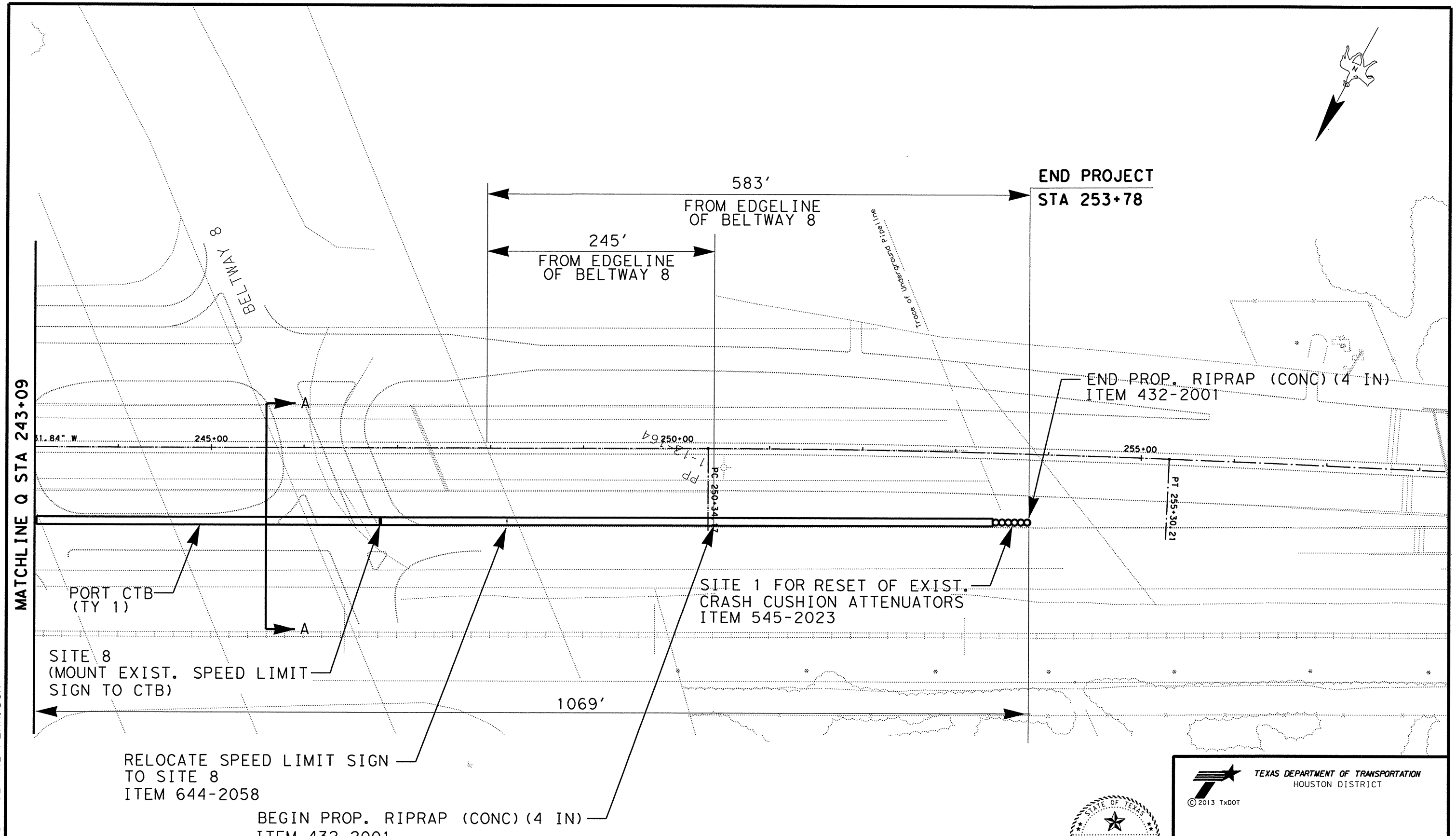

FILE: US90A@HIRAMCLARKE*PLAN.DGN

STATE OF TEXAS
BARBARA D. RUSSELL
100097
LICENSED
PROFESSIONAL ENGINEER

4·15·13

TEXAS DEPARTMENT OF TRANSPORTATION
HOUSTON DISTRICT

© 2013 TxDOT

ROADWAY PLAN

SHEET 18 OF 18

SCALE	FED. RD. DIV. NO.	STATE	PROJECT NO.			HIGHWAY
1"=100'	6	TEXAS				US 90 A
REVISIONS	STATE DISTRICT	COUNTY	CONTROL	SECTION	JOB	SHEET NO.
	12	HARRIS	0027	09	099	41

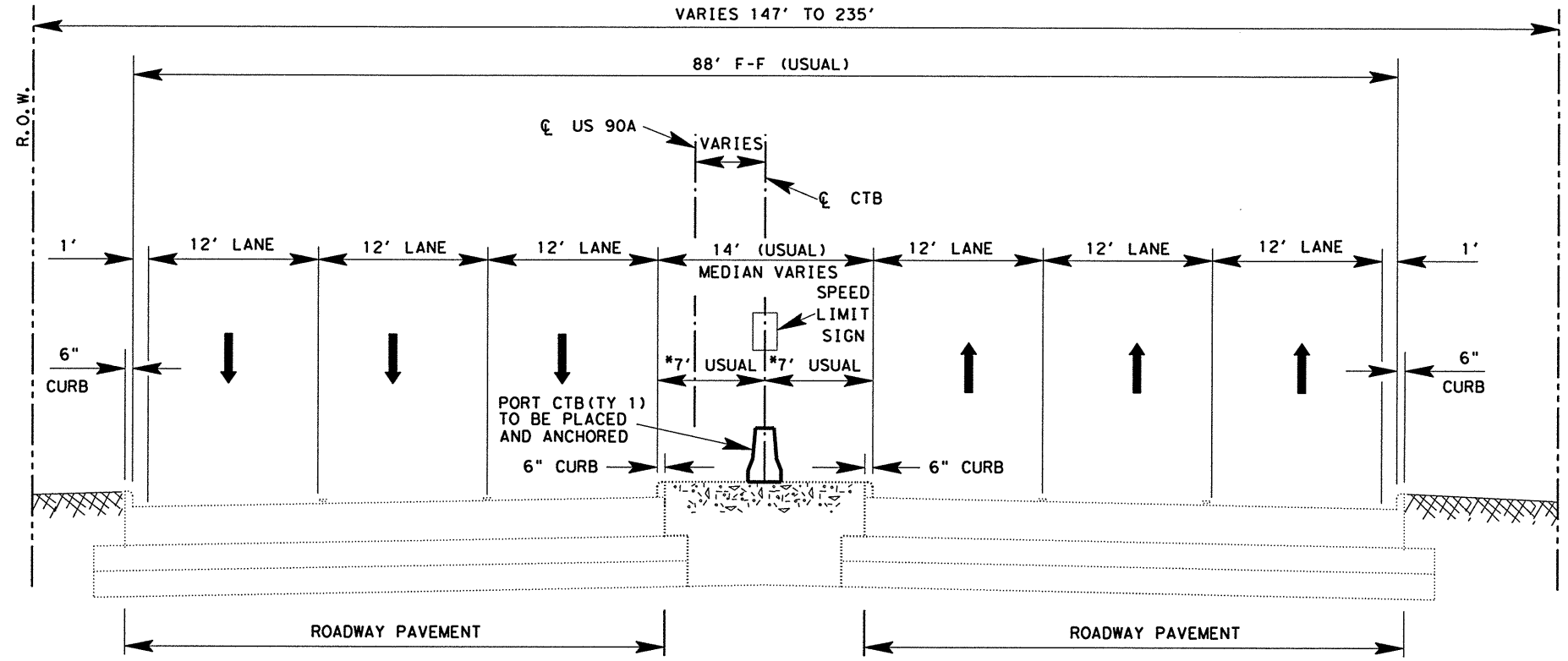

TYPICAL SECTION A - A

(EXISTING CONCRETE MEDIAN)

NOTES:

1. * CTB TO BE PLACED ALONG CENTERLINE OF MEDIAN.

   CENTERLINE OF MEDIAN = $\frac{\text{MEDIAN}}{2}$

2. APPLY TYPICAL SECTION A-A (EXISTING CONCRETE MEDIAN) WHERE THE MEDIAN HAS EXISTING CONCRETE IN THE MEDIAN.
3. APPLY TYPICAL SECTION A-A (EXISTING EMBANKMENT MEDIAN) WHERE THE MEDIAN HAS EXISTING EMBANKMENT IN THE MEDIAN.
4. APPLY TYPICAL SECTION A-A (EMBANKMENT MEDIAN) AT STA 253+78.
5. USE THESE TYPICALS FOR ALL STATIONS FROM STA 10+68 THROUGH STA 253+78.

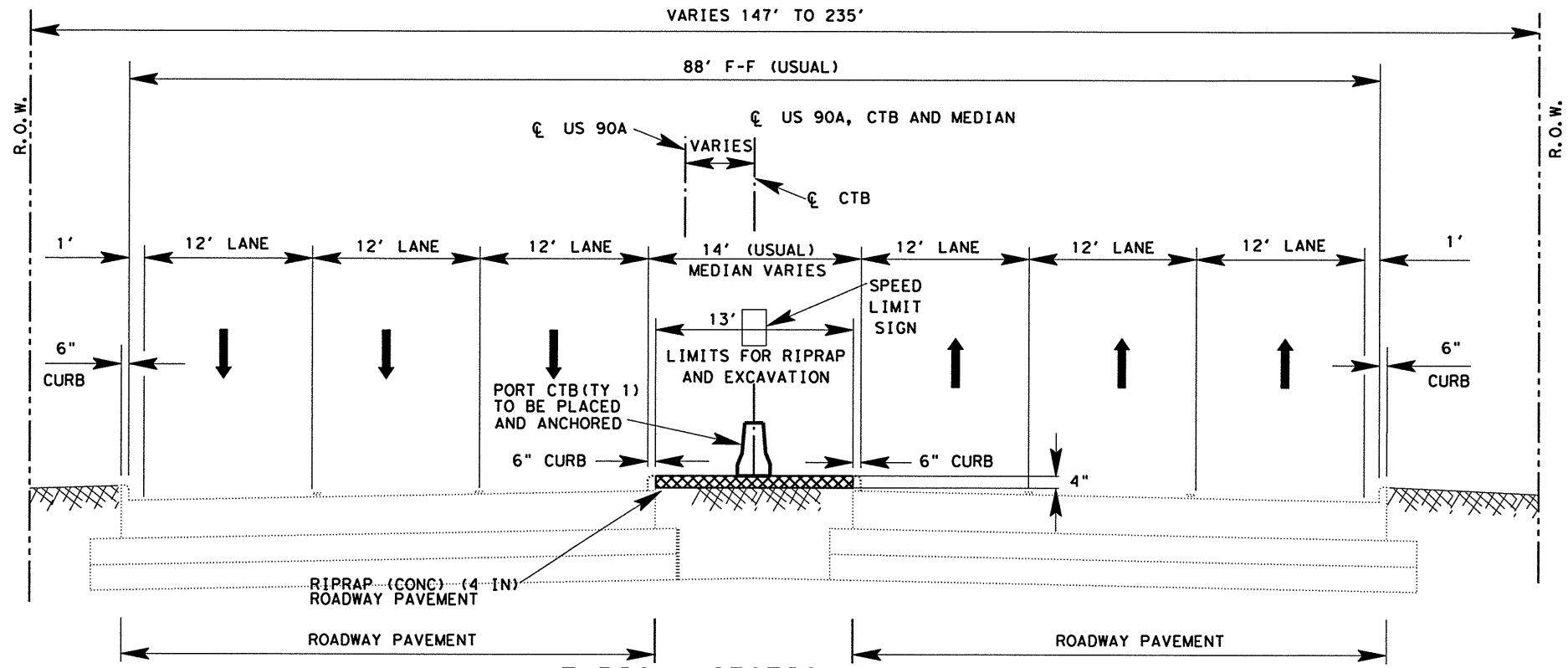

TYPICAL SECTION A - A

(EXISTING EMBANKMENT MEDIAN)

STATE OF TEXAS
BARBARA D. RUSSELL
100097
LICENSED
PROFESSIONAL ENGINEER

Barbara D. Russell, P.E.
4.15.13

© 2013 TxDOT

TEXAS DEPARTMENT OF TRANSPORTATION
HOUSTON DISTRICT

TYPICAL SECTIONS

SHEET 1 OF 3

SCALE	FED. RD. DIV. NO.	STATE	PROJECT NO.			HIGHWAY
N.I.S.	6	TEXAS				US 90 A
REVISIONS	STATE DISTRICT	COUNTY	CONTROL	SECTION	JOB	SHEET NO.
	12	HARRIS	0027	09	099	42

FILE: FILE_NAME.DGN

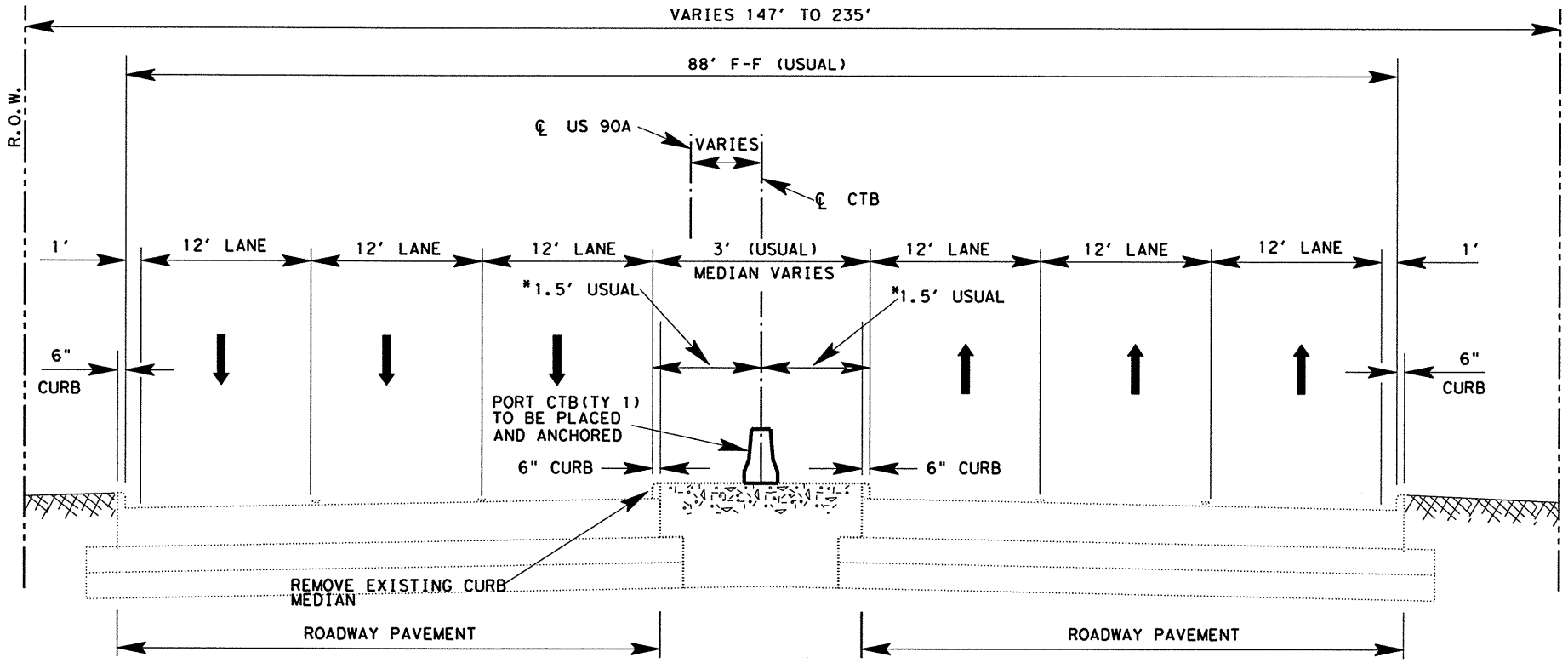

TYPICAL SECTION B - B

(WITH EXISTING CONCRETE MEDIAN)

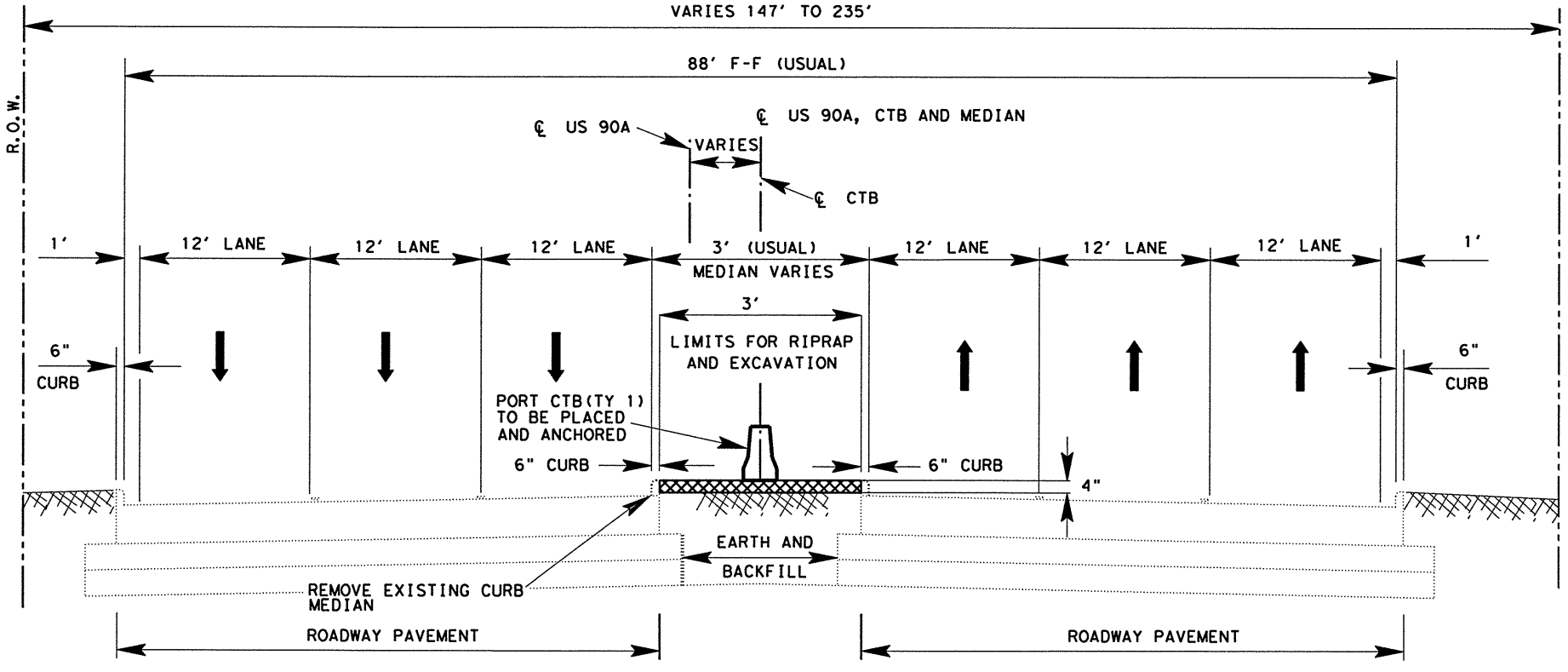

TYPICAL SECTION B - B

(WITH EXISTING EMBANKMENT MEDIAN)

NOTES:

1. * CTB TO BE PLACED ALONG CENTERLINE OF MEDIAN.

   CENTERLINE OF MEDIAN = $\frac{\text{MEDIAN}}{2}$

2. APPLY TYPICAL SECTION A-A (EXISTING CONCRETE MEDIAN) WHERE THE MEDIAN HAS EXISTING CONCRETE IN THE MEDIAN.
3. APPLY TYPICAL SECTION A-A (EXISTING EMBANKMENT MEDIAN) WHERE THE MEDIAN HAS EXISTING EMBANKMENT IN THE MEDIAN.
4. THESE TYPICALS ARE TO BE USED IN REFERENCE TO THE BEGINNING OF THE PROJECT WHERE THE MEDIAN WIDTH IS APPROXIMATELY 3'.
5. USE THESE TYPICAL SECTIONS FOR ALL STATIONS FROM STA 8+00 THROUGH STA 10+68.
6. USE THESE TYPICAL SECTIONS IF THE ROADWAY IS NOT CONTINUOUS AFTER THE REMOVAL OF THE CURBED MEDIAN.

STATE OF TEXAS
BARBARA D. RUSSELL
100097
LICENSED
PROFESSIONAL ENGINEER
Barbara Russell, P.E
4.15.13

© 2013 TxDOT

TEXAS DEPARTMENT OF TRANSPORTATION
HOUSTON DISTRICT

TYPICAL SECTIONS

SHEET 2 OF 3

SCALE	FED.RD. DIV.NO.	STATE	PROJECT NO.		HIGHWAY
N.I.S.	6	TEXAS			US 90 A
REVISIONS	STATE DISTRICT	COUNTY	CONTROL	SECTION	JOB	SHEET NO.
	12	HARRIS	0027	09	099	43

FILE: EILE_NAME.DGN

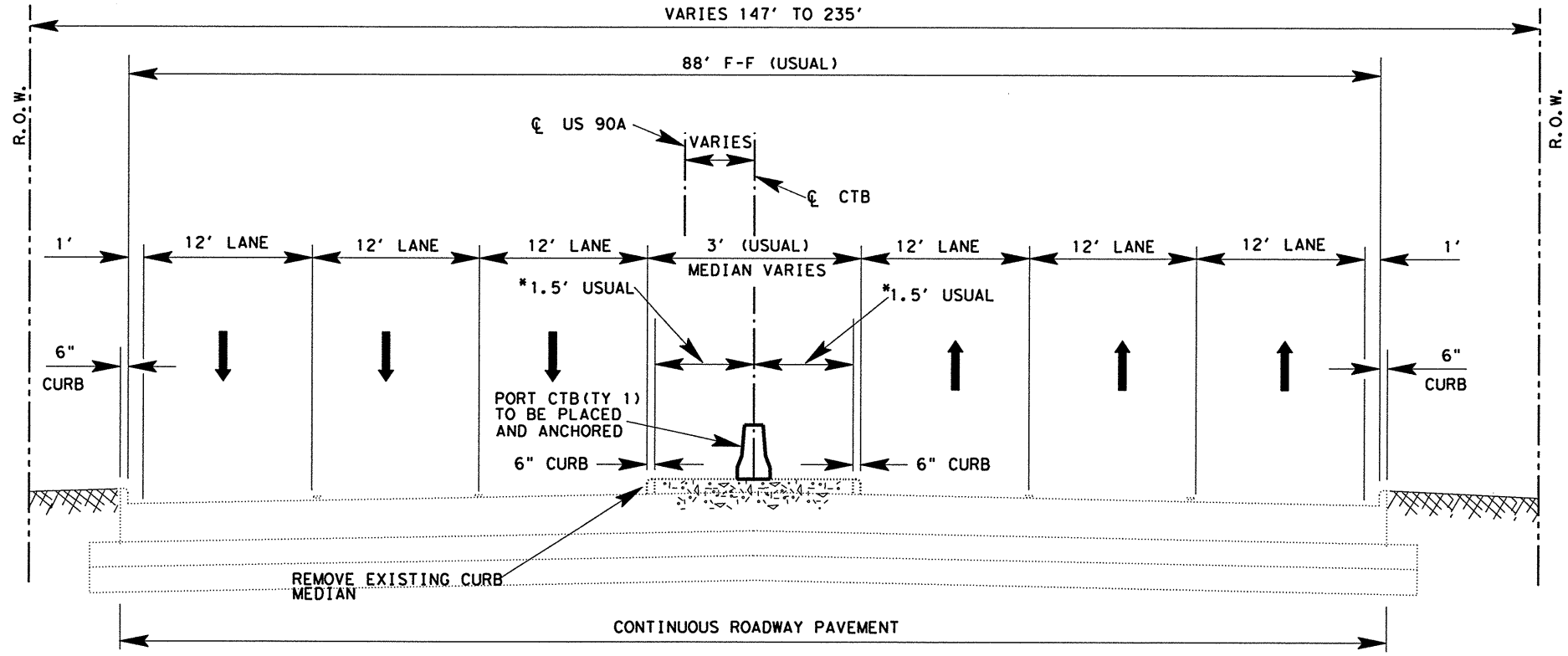

TYPICAL SECTION B - B

(WITH EXISTING CONCRETE MEDIAN)

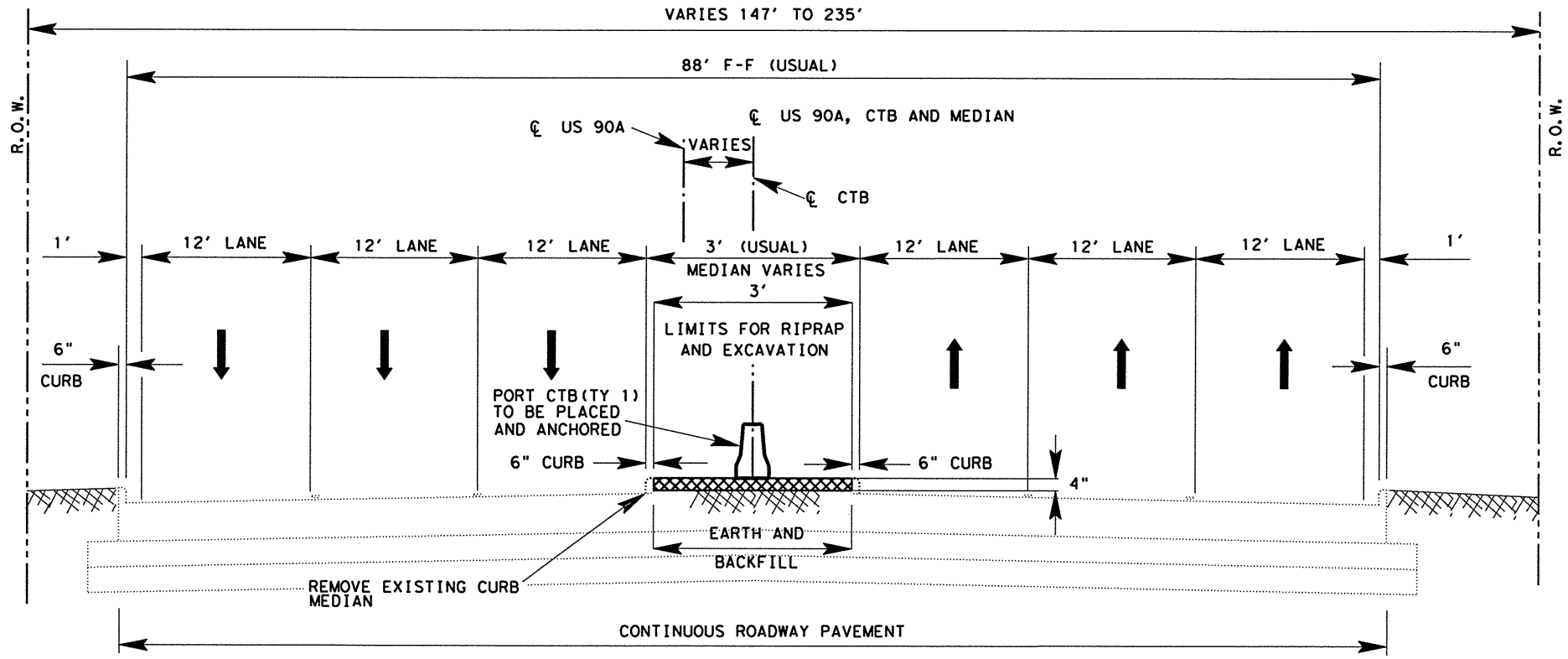

TYPICAL SECTION B - B

(WITH EXISTING EMBANKMENT MEDIAN)

NOTES:

1. * CTB TO BE PLACED ALONG CENTERLINE OF MEDIAN.

   CENTERLINE OF MEDIAN = $\frac{\text{MEDIAN}}{2}$

2. APPLY TYPICAL SECTION A-A (EXISTING CONCRETE MEDIAN) WHERE THE MEDIAN HAS EXISTING CONCRETE IN THE MEDIAN.
3. APPLY TYPICAL SECTION A-A (EXISTING EMBANKMENT MEDIAN) WHERE THE MEDIAN HAS EXISTING EMBANKMENT IN THE MEDIAN.
4. THESE TYPICALS ARE TO BE USED IN REFERENCE TO THE BEGINNING OF THE PROJECT WHERE THE MEDIAN WIDTH IS APPROXIMATELY 3'.
5. USE THESE TYPICAL SECTIONS FOR ALL STATIONS FROM STA 8+00 THROUGH STA 10+68.
6. USE THESE TYPICAL SECTIONS IF THE ROADWAY IS CONTINUOUS AFTER THE REMOVAL OF THE CURBED MEDIAN.

STATE OF TEXAS
BARBARA D. RUSSELL
100097
LICENSED
PROFESSIONAL ENGINEER
4.16.2013

© 2013 TxDOT

TEXAS DEPARTMENT OF TRANSPORTATION
HOUSTON DISTRICT

TYPICAL SECTIONS

SHEET 3 OF 3

SCALE	FED.RD. DIV.NO.	STATE	PROJECT NO.		HIGHWAY
N.I.S.	6	TEXAS			US 90 A
REVISIONS	STATE DISTRICT	COUNTY	CONTROL	SECTION	JOB / SHEET NO.
	12	HARRIS	0027	09	099 / 44

FILE: FILE_NAME.DGN

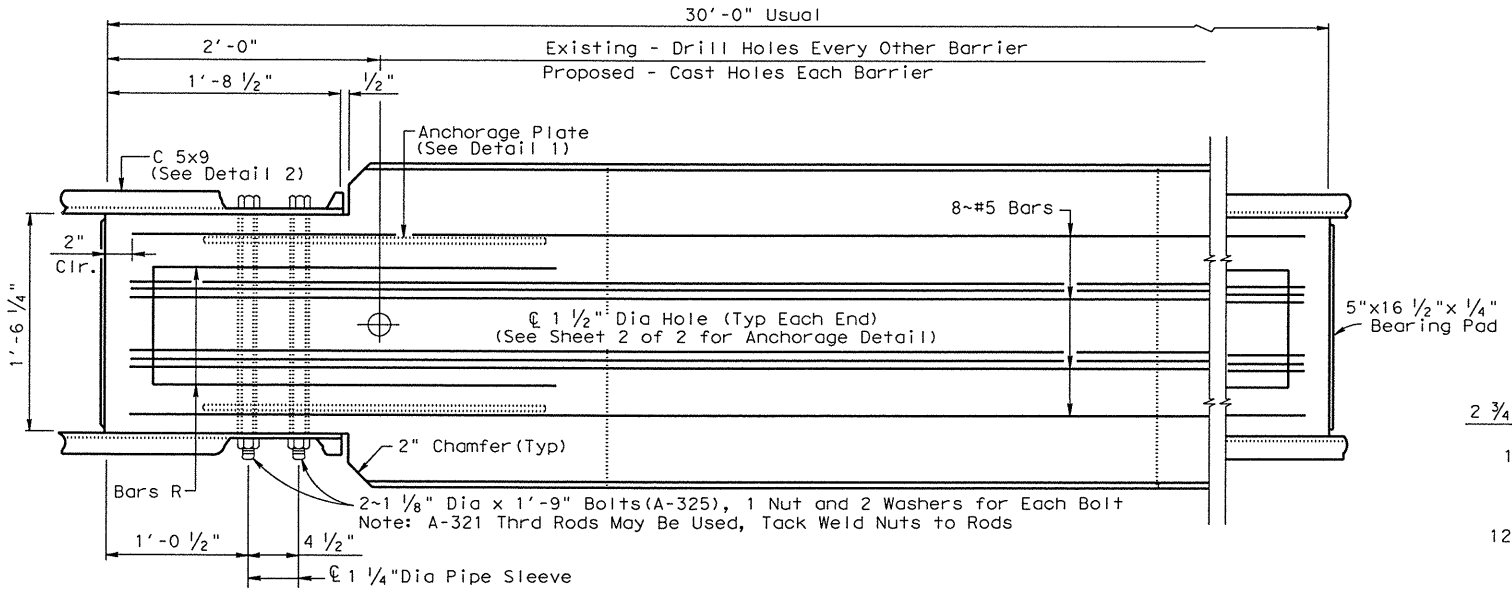

PLAN
(Typ Both Ends)

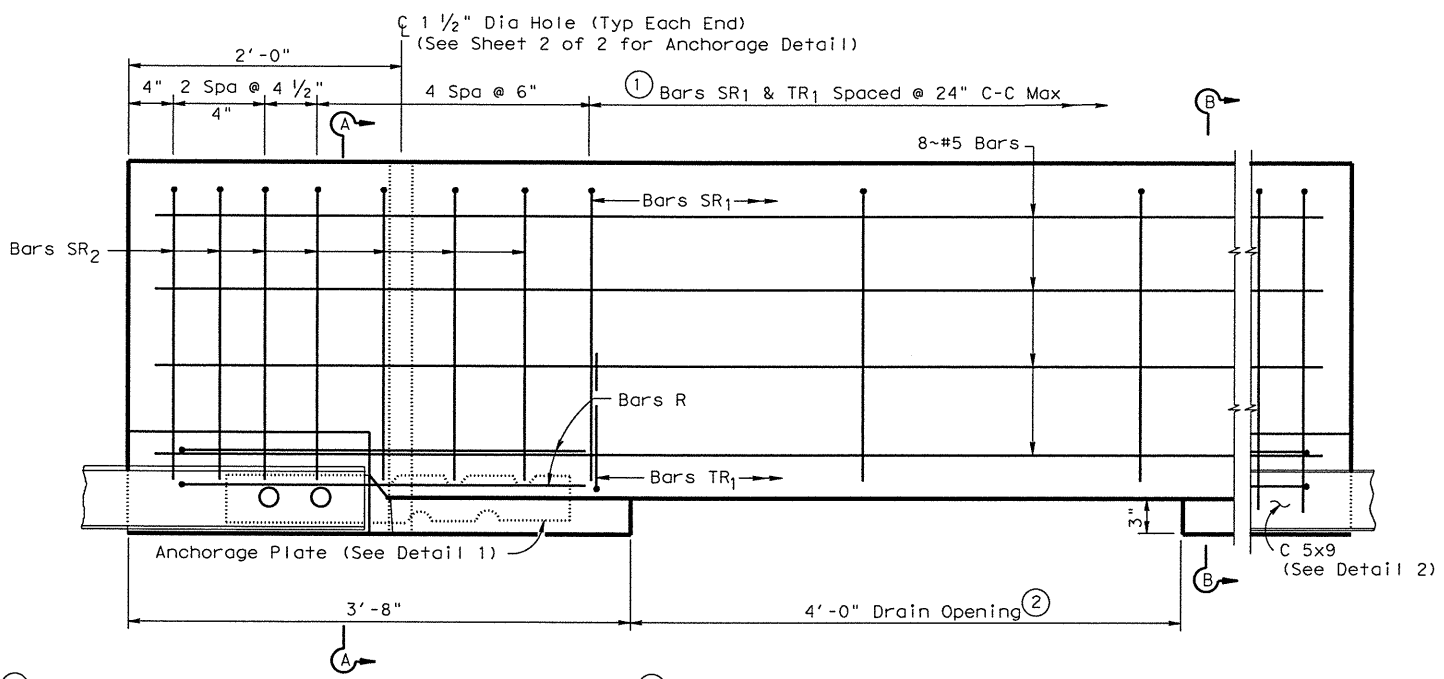

ELEVATION
(Typ Both Ends)

① Omit bars TR1 at drain openings and field cut bars SR_1 to clear drain openings by 1½".

② Drainage openings in the barrier will be provided only where it is necessary to accommodate a flow of water through the barrier. Approval of the Engineer will be obtained for location of drainage openings. At all other locations the drainage openings will be omitted and the barrier cast solid. Where drainage openings are required, there will be three 4'-0" openings in each 30' section, one of which to be centered within the length of the barrier.

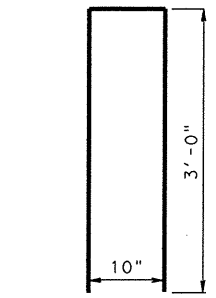

BAR R
(#6)

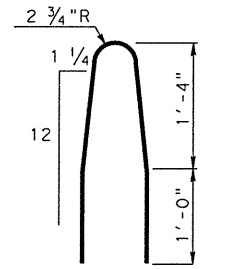

BAR SR_2
(#4)

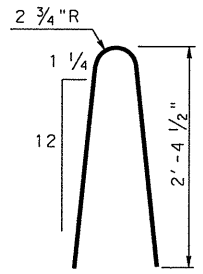

BAR SR_1
(#4)

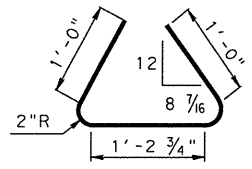

BAR TR_1
(#4)

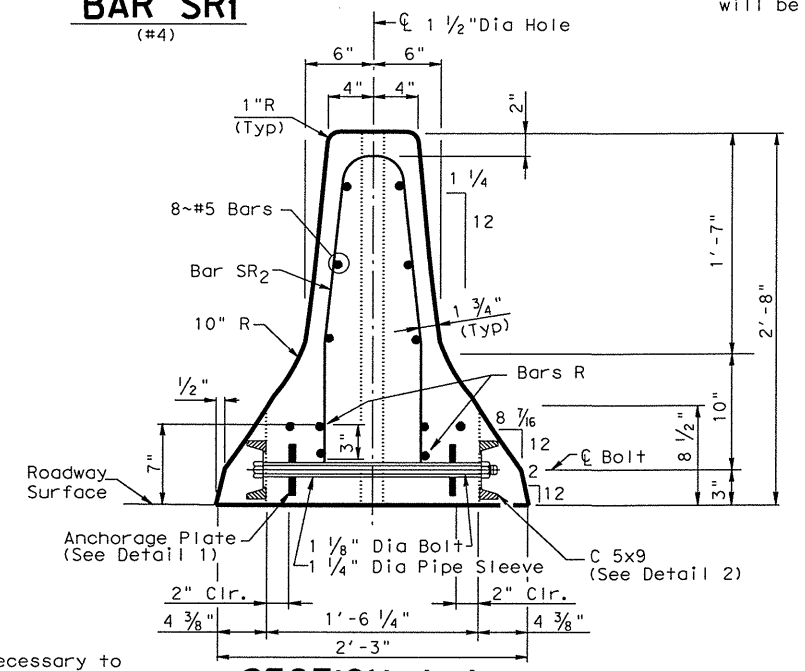

SECTION A-A

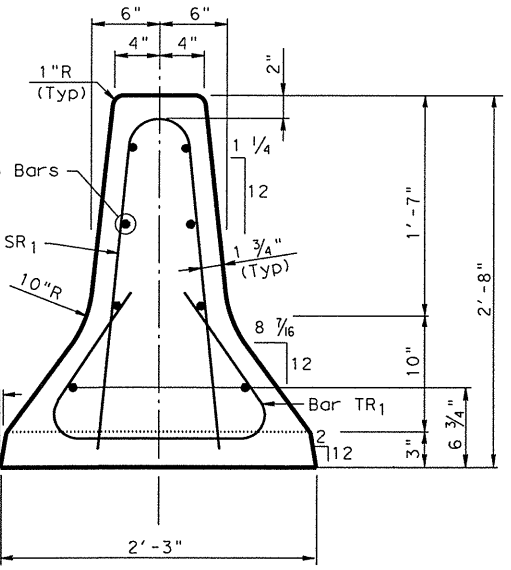

SECTION B-B

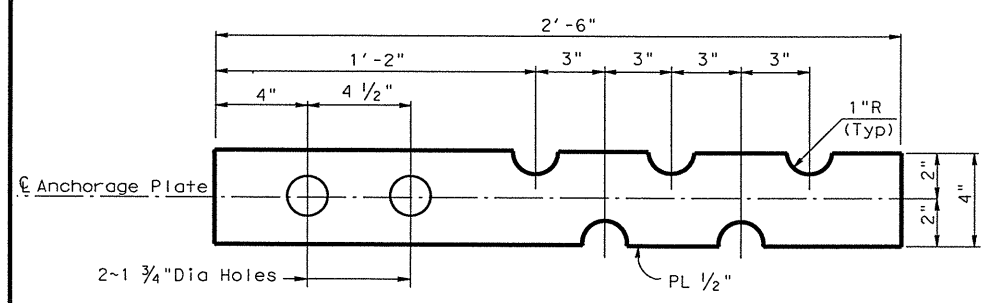

DETAIL 1

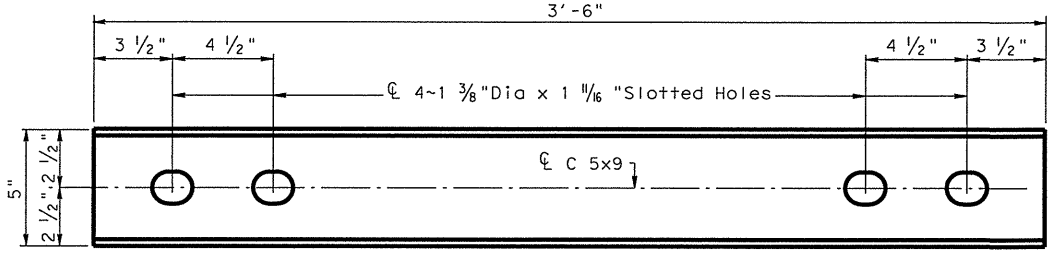

DETAIL 2

APPROXIMATE QUANTITIES FOR A 30 FT. SECTION		
CONCRETE	CY	3.27
REINFORCING STEEL	LBS	390

Approximate weight per foot is 442 Lbs.
For Contractor's Information Only.

R = Radius
Dia = Diameter

GENERAL NOTES

1. Channel sections and all steel plates will conform to ASTM designation A36.
2. Bearing pads will be made of an elastomeric material with a hardness of 70 durometer and are to be epoxied to barrier unit after casting.
3. All concrete will be Class C.
4. All reinforcing steel will be Grade 60.
5. Each barrier will be delivered with 2 channel shapes (C 5x9) and connecting hardware.
6. When barrier is to be placed in a curving alignment, the C 5x9 channel sections may be heated at the mid-point and pre-bent.
7. All C 5x9 channels will be hot-dip galvanized in conformance to ASTM designation A123. Bolts, nuts, and washers will be hot-dip galvanized to conform to ASTM designation A153.
8. 2" diameter lifting holes will be formed in each section of concrete traffic barrier. They will be located 1'-5" above the base, 5'-0" from each end and at the mid-point.
9. Reinforcing steel, bolts, nuts, washers, channel sections, and anchorage plates will be included in the price paid per linear foot for concrete traffic barrier.
10. When serving to channelize traffic in nighttime situations, the barrier should be light in color and will be supplemented by the use of standard delineation or channelization markings or devices such as delineators or vertical panels.
11. When directed by the Engineer, a ½" thick (nominal) grout leveling pad may be required beneath the barrier when it is permanently installed on the roadway crown. See Item "Hydraulic Cement Concrete" for grout mixture. The work will be incidental to pertinent items.

FOR CONTRACTOR INFORMATION ONLY

Texas Department of Transportation
Houston District

PRECAST CONCRETE TRAFFIC BARRIER

PCTB

FILE: STDC1.DGN	DN: TxDot	CK: TxDot	DW: TxDot	CK: TxDot
©TxDOT NOV. 2011	DIST	FED REG	PROJECT NO.	SHEET
REVISIONS	12	6		45
	COUNTY		CONTROL SECT JOB	HIGHWAY
	HARRIS		0027 09 099	US90A

STDC1.DGN

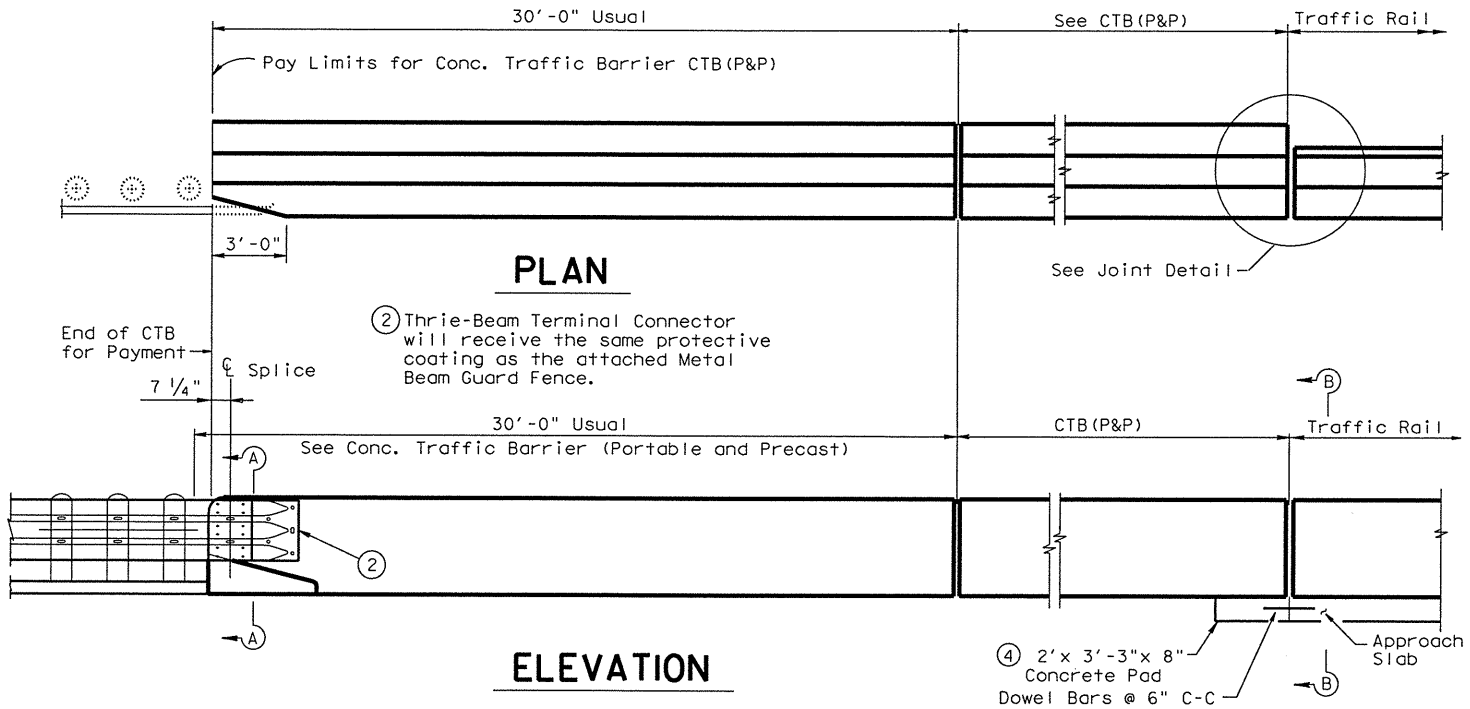

PLAN

ELEVATION

(2) Thrie-Beam Terminal Connector will receive the same protective coating as the attached Metal Beam Guard Fence.

(4) Concrete pad required on projects design for asphaltic concrete pavement usage

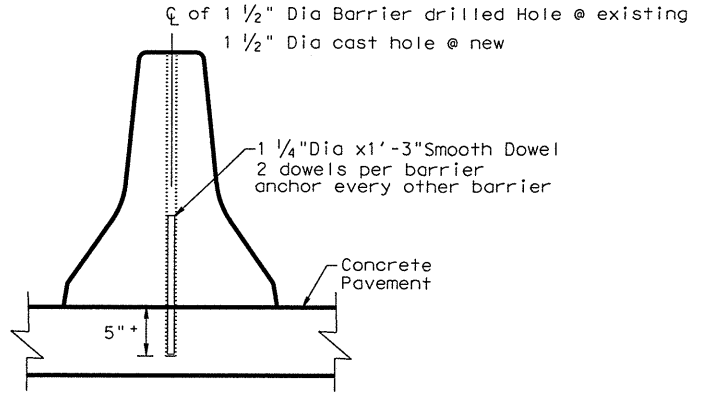

ANCHORAGE DETAIL

End View
Dowel Anchorage Not Required for Traffic Control or Other Non-Permanent Installations.

CTB DOWEL ANCHORAGE NOTES:

1. These details provide a method of restraining precast concrete barrier to limit lateral movement.
2. Drill the concrete pavement by placing the barrier section on the concrete pavement in the desired location. Then drill the hole into the concrete pavement with the bit passing through the hole in the barrier. Drill the hole in the concrete pavement to a point which is slightly more than 5" below the surface of the concrete pavement.
3. Drilling holes in the barrier, drilling holes in the concrete pavement, fabrication and materials for the 1 ¼" steel pins, and any repair of the concrete pavement or barrier will be considered as subsidiary to the barrier bid items.

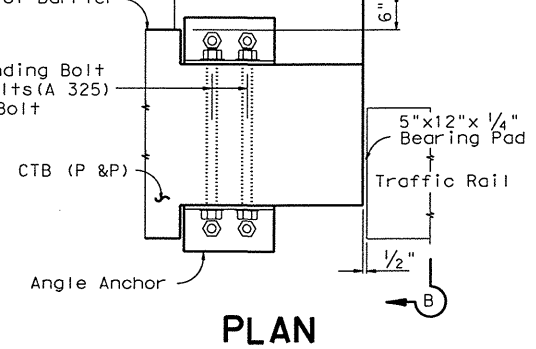

PLAN

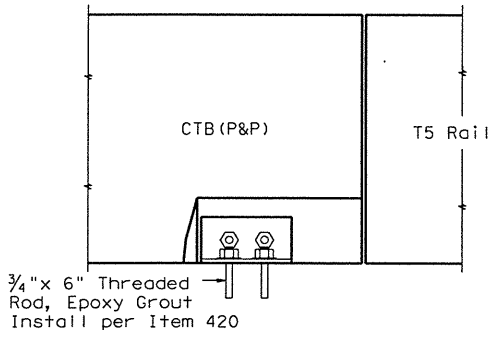

ELEVATION

JOINT DETAIL

Showing end of barrier

℄ 5 ~ ⅞" Dia A325 Hex Head Bolts with two 1 ¾" O.D. washers. Place washer under each head and nut. The 5 Terminal Connection Bolts will be tightened in a well distributed pattern so to prevent damage or distortion of the Thrie-Beam Connection and the MBGF Transition. Bolts will be cut off after installation so as to extend no more than ¾" beyond nut. End of cut-off bolt will be painted with Zinc-rich paint.

℄ 5 ~ 1" Dia holes and 2 ½" Dia x 2" deep recesses. Holes and recesses must be formed or cored. Percussion drilling is not permitted. Adjust placement of reinforcing steel as necessary to avoid bolt holes and recesses.

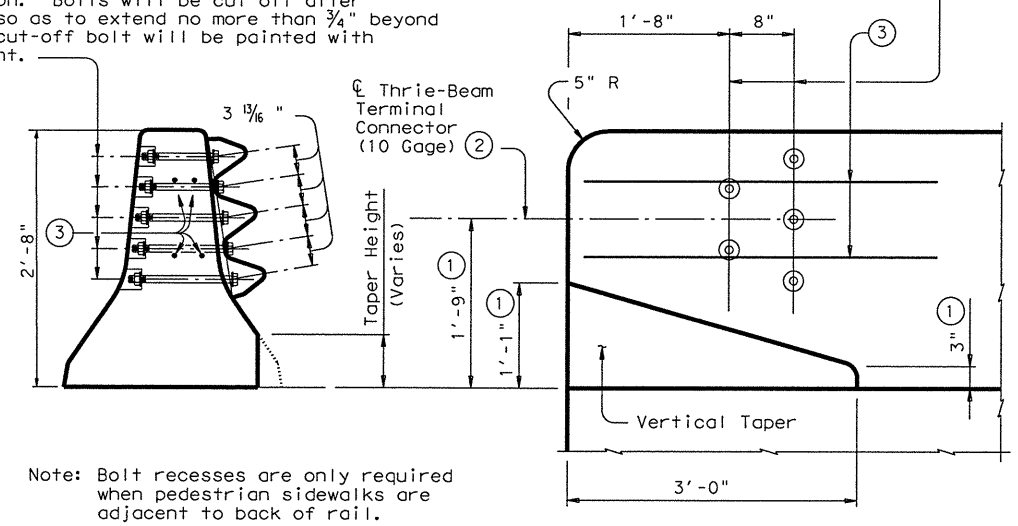

Note: Bolt recesses are only required when pedestrian sidewalks are adjacent to back of rail.

SECTION A-A

ELEVATION

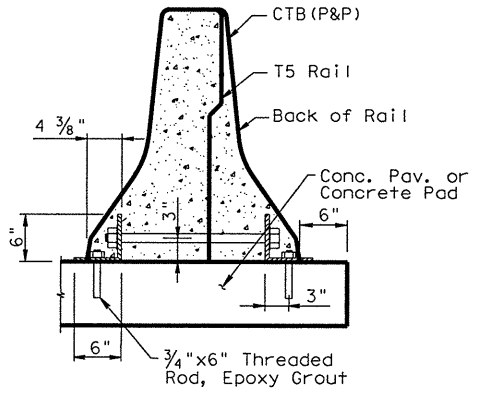

SECTION B-B

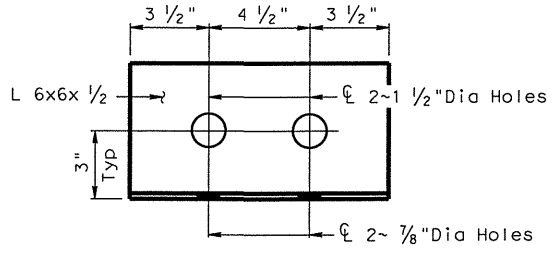

ANGLE ANCHOR

Galvanize Per Item 445
N.T.S.

TERMINAL CONNECTION DETAIL

(1) Increase 2" for Structures with Overlay.

(3) 4 additional Bars R(#4) 3'-8" in length will be placed inside Bars S(#5) and centered 2'-0" from end of rail when Terminal Connections are required.

R = Radius
Dia = Diameter

FOR CONTRACTOR INFORMATION ONLY

Texas Department of Transportation
Houston District

PRECAST CONCRETE TRAFFIC BARRIER

PCTB

FILE: STDC1.DGN	DN: TxDot	CK: TxDot	DW: TxDot	CK: TxDot
©TxDOT NOV. 2011	DIST	FED REG	PROJECT NO.	SHEET
REVISIONS	12	6		46
	COUNTY		CONTROL SECT JOB	HIGHWAY
	HARRIS		0027 09 099	US90A

STDC1.DGN

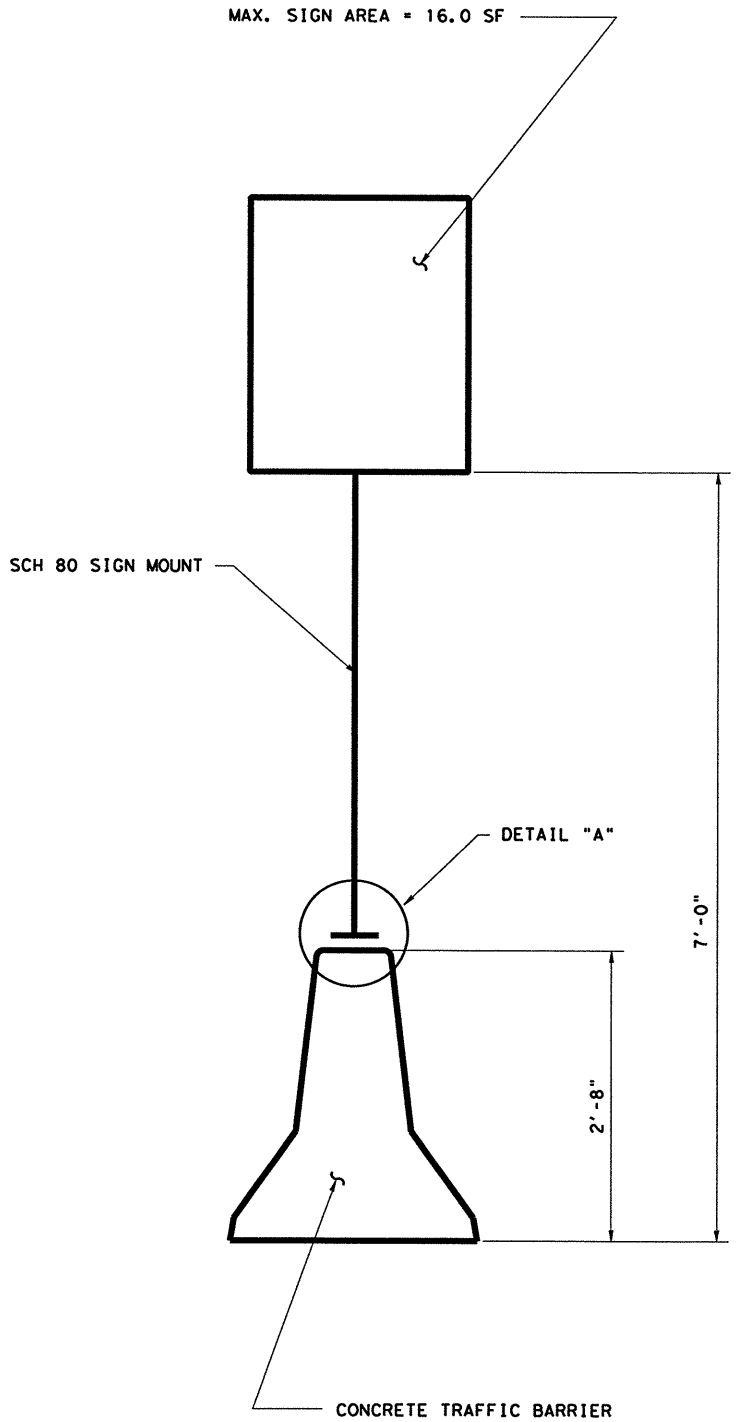

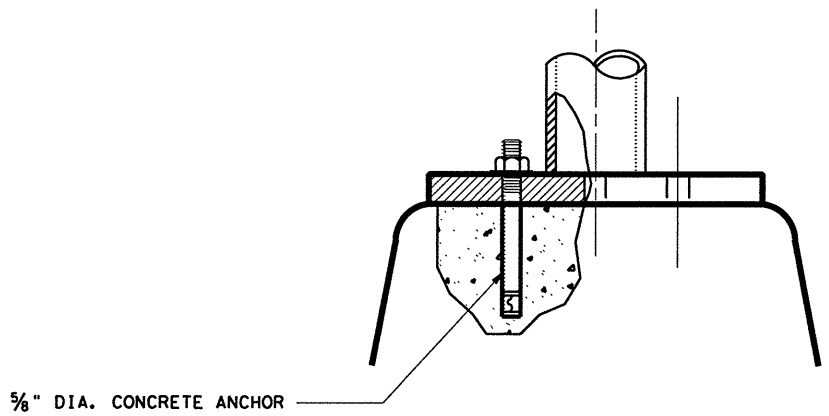

DETAIL "A"

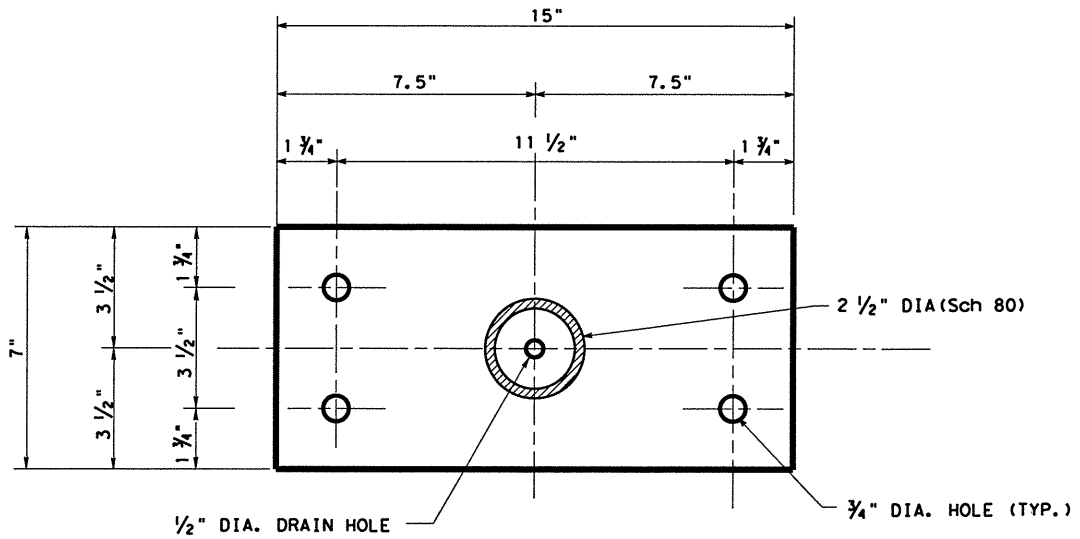

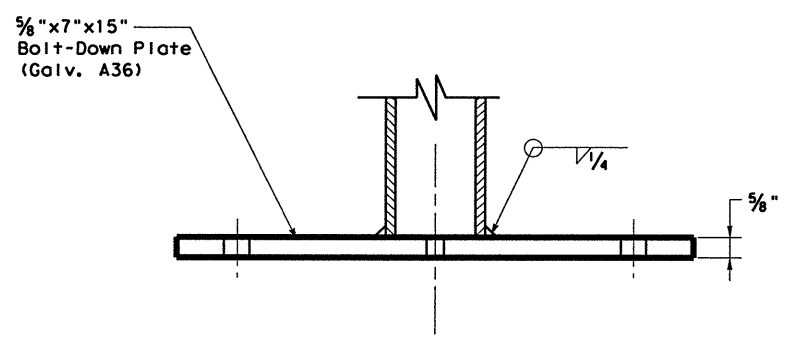

NOTES:
THE CONCRETE TRAFFIC BARRIER SIGN MOUNT SHALL BE PAID FOR UNDER THE ITEM, "INS SM RD SN SUP & AM TYPE S80(1)SB(X-XXXX)".

For General Notes, see "SMD Series" Standard sheets for Small Roadside Signs.

Texas Department of Transportation
Houston District

CONCRETE TRAFFIC BARRIER SIGN MOUNT

SMD(CTB)-04

FILE:	DN:	CK:	DW:	CK:
© TxDOT 1998	DIST	FED REG	PROJECT NO.	SHEET
REVISIONS	12	6		47
	COUNTY	CONTROL	SECT	JOB	HIGHWAY
	HARRIS	0027	09	099	US90A

STD N-9

DISCLAIMER: The use of this standard is governed by the "Texas Engineering Practice Act". No warranty of any kind is made by TxDOT for any purpose whatsoever. TxDOT assumes no responsibility for the conversion of this standard to other formats or for incorrect results or damages resulting from its use.

SIGN SUPPORT DESCRIPTIVE CODES

(Descriptive Codes correspond to project estimate and quantities sheets)

SM RD SGN ASSM TY XXXXX(X)XX(X-XXXX)

Post Type

FRP = Fiberglass Reinforced Plastic Pipe (see SMD(FRP))
TWT = Thin-Walled Tubing (see SMD(TWT))
10BWG = 10 BWG Tubing (see SMD(SLIP-1) to (SLIP-3))
S80 = Schedule 80 Pipe (see SMD(SLIP-1) to (SLIP-3))

Number of Posts (1 or 2)

Anchor Type

UA = Universal Anchor - Concreted (see SMD(FRP) and (TWT))
UB = Universal Anchor - Bolted down (see SMD(FRP) and (TWT))
WS = Wedge Anchor Steel - (see SMD(TWT))
WP = Wedge Anchor Plastic (see SMD(TWT))
SA = Slipbase - Concreted (see SMD(SLIP-1) to (SLIP-3))
SB = Slipbase - Bolted Down (see SMD(SLIP-1) to (SLIP-3))

Sign Mounting Designation

P = Prefab. "Plain" (see SMD(SLIP-1) to (SLIP-3), (TWT), (FRP))
T = Prefab. "T" (see SMD(SLIP-1) to (SLIP-3), (TWT))
U = Prefab. "U" (see SMD(SLIP-1) to (SLIP-3))
IF REQUIRED
1EXT or 2EXT = Number of Extensions (see SMD(SLIP-1) to (SLIP-3), (TWT))
BM = Extruded Wind Beam (see SMD(SLIP-1) to (SLIP-3))
WC = 1.12 #/ft Wing Channel (see SMD(SLIP-1) to (SLIP-3))
EXAL = Extruded Aluminum Sign Panels (see SMD(SLIP-3))

REQUIRED CLEARANCE FOR BREAKAWAY SUPPORT

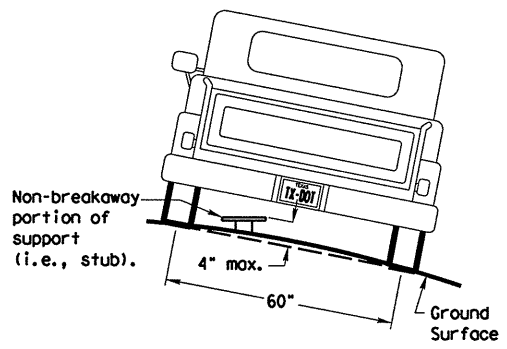

To avoid vehicle undercarriage snagging, any substantial remains of a breakaway support, when it is broken away, should not project more than 4 inches above a 60-inch chord (i.e., typical space between wheel paths).

SIGN LOCATION

PAVED SHOULDERS

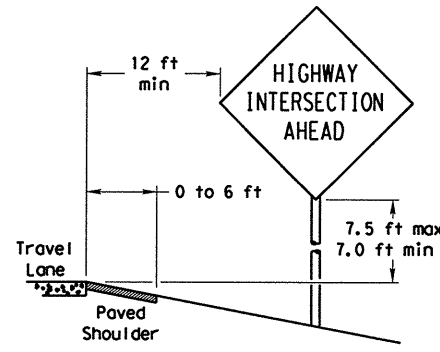

LESS THAN 6 FT. WIDE

When the shoulder is 6 ft. or less in width, the sign must be placed at least 12 ft. from the edge of the travel lane.

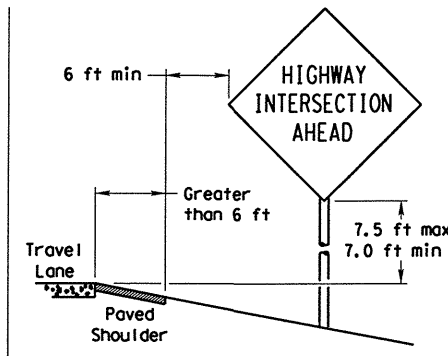

GREATER THAN 6 FT. WIDE

When the shoulder is greater than 6 ft in width, the sign must be placed at least 6 ft. from the edge of the shoulder.

BEHIND BARRIER

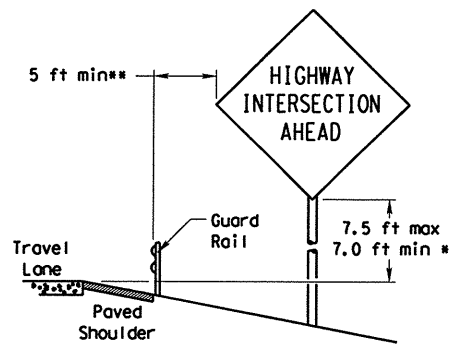

BEHIND GUARDRAIL

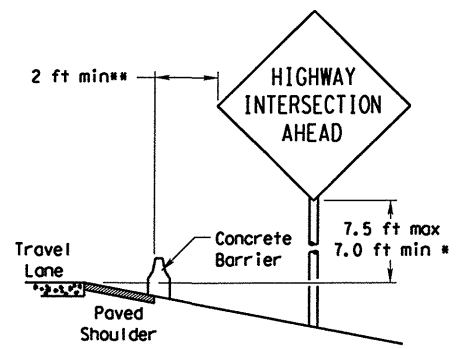

BEHIND CONCRETE BARRIER

**Sign clearance based on distance required for proper guard rail or concrete barrier performance.

T-INTERSECTION

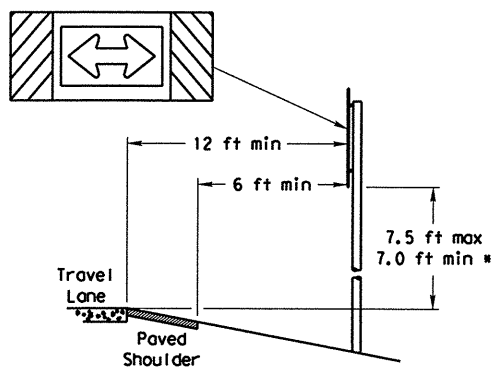

When this sign is needed at the end of a two-lane, two way roadway, the right edge of the sign should be in line with the centerline of the roadway. Place as close to ROW as practical.

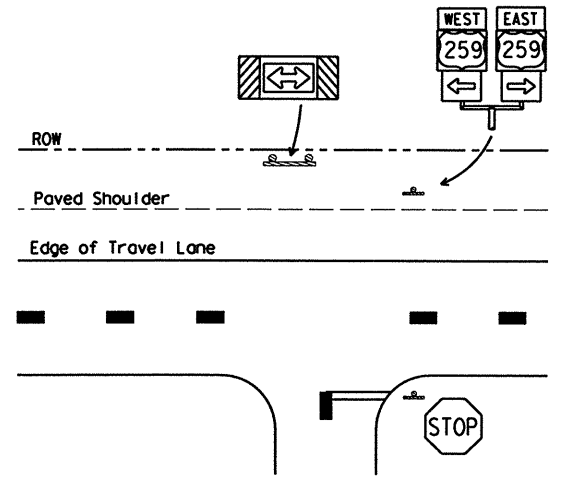

* Signs shall be mounted using the following condition that results in the greatest sign elevation:

(1) a minimum of 7 to a maximum of 7.5 feet above the edge of the travel lane or

(2) a minimum of 7 to a maximum of 7.5 feet above the grade at the base of the support when sign is installed on the backslope.

The maximum values may be increased when directed by the Engineer.

See the Traffic Operations Division website for detailed drawings of sign clamps, Triangular Slipbase System components and Wedge Anchor System components.

The website address is:
http://www.txdot.gov/publications/traffic.htm

No more than 2 sign posts should be located within a 7 ft. circle.

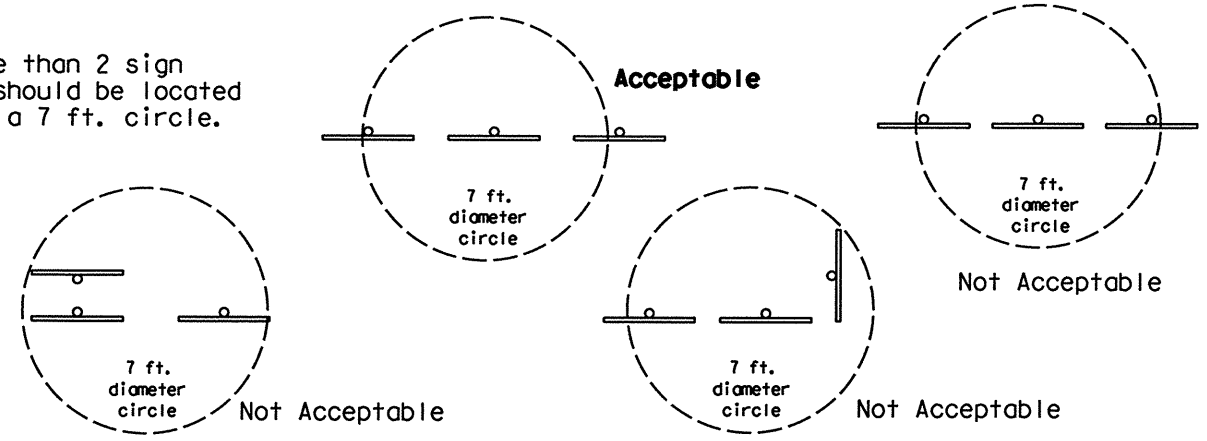

TYPICAL SIGN ATTACHMENT DETAIL

Single Signs

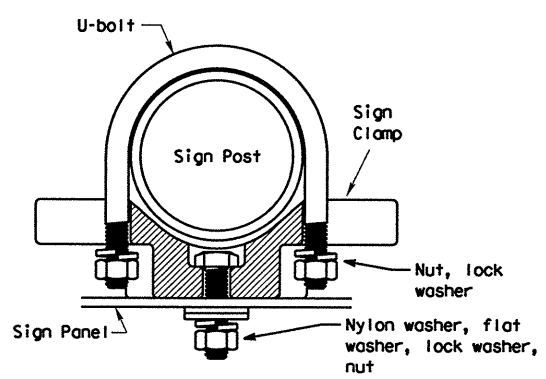

Bolts used to mount sign panels to the clamp are 5/16-18 UNC galvanized square head with nut, nylon washer, flat washer and lock washer. The bolt length is 1 inch for aluminum.

When two sign clamps are used to mount signs back-to-back, use a 5/16-18 UNC galvanized hex head per ASTM A307 with nut and helical-spring lock washer. The approximate bolt lengths for various post sizes and sign clamp types are given in the table at right. The bolt length may need to be adjusted depending upon field conditions.

Sign clamps may be either the specific size clamp or the universal clamp.

Back-to-Back Signs

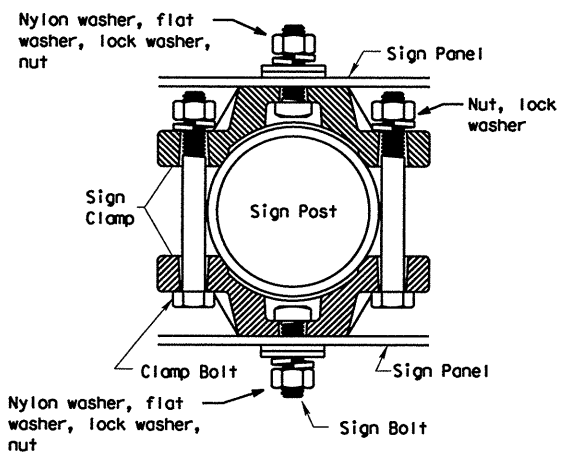

Pipe Diameter	Approximate Bolt Length	
	Specific Clamp	Universal Clamp
2" nominal	3"	3 or 3 1/2"
2 1/2" nominal	3 or 3 1/2"	3 1/2 or 4"
3" nominal	3 1/2 or 4"	4 1/2"

SIGNS WITH PLAQUES

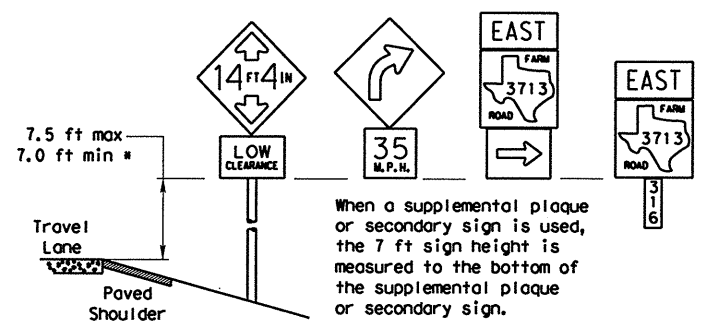

When a supplemental plaque or secondary sign is used, the 7 ft sign height is measured to the bottom of the supplemental plaque or secondary sign.

CURB & GUTTER OR RAISED ISLAND

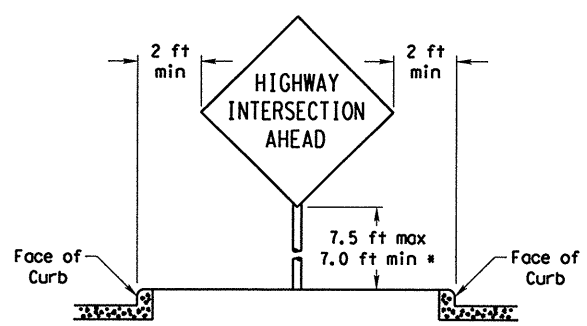

RESTRICTED RIGHT-OF-WAY

(When 6 ft min. is not possible.)

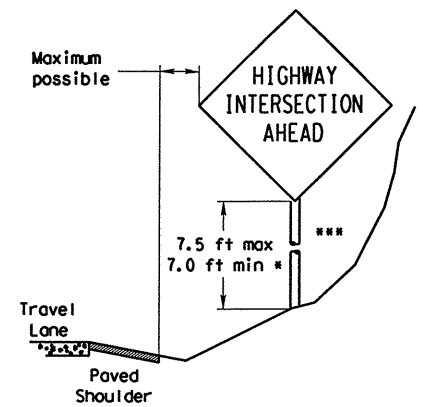

Right-of-way restrictions may be created by rocks, water, vegetation, forest, buildings, a narrow island, or other factors.

In situations where a lateral restriction prevents the minimum horizontal clearance from the edge of the travel lane, signs should be placed as far from the travel lane as practical.

*** Post may be shorter if protected by guardrail or if Engineer determines the post could not be hit due to extreme slope.

Texas Department of Transportation
Traffic Operations Division

SIGN MOUNTING DETAILS SMALL ROADSIDE SIGNS GENERAL NOTES & DETAILS

SMD(GEN)-08

©TxDOT July 2002	DN: TXDOT	CK: TXDOT	DW: TXDOT	CK: TXDOT
9-08 REVISIONS	CONT	SECT	JOB	HIGHWAY
	0027	09	099	US 90A
	DIST	COUNTY		SHEET NO.
	12	HARRIS		47A

DATE:
FILE:

DISCLAIMER:
The use of this standard is governed by the "Texas Engineering Practice Act". No warranty of any kind is made by TxDOT for any purpose and accepts no responsibility for the conversion of this standard to other formats or for incorrect results or damages resulting from its use.

DATE:
FILE:

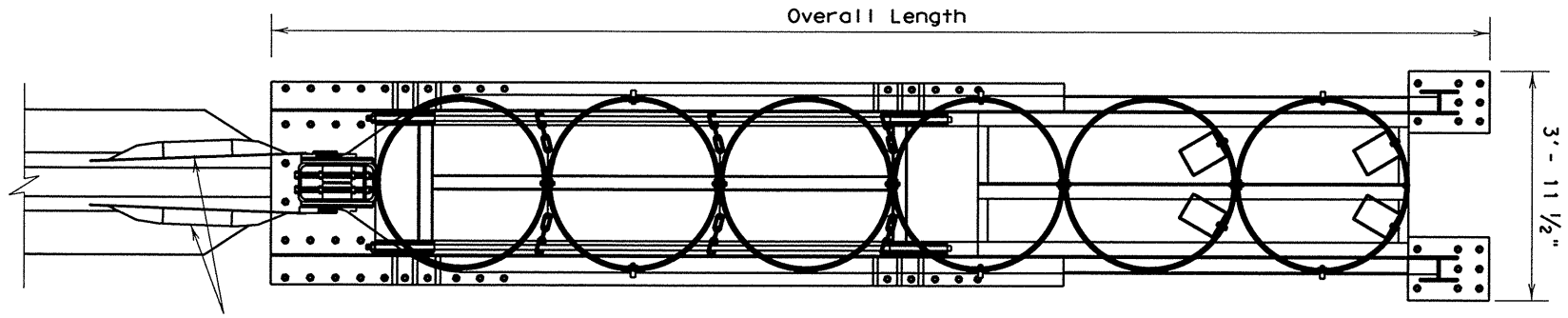

TYPICAL PLAN "B" (Self Contained Backup)

(Cylinder Cover not shown for clarity)

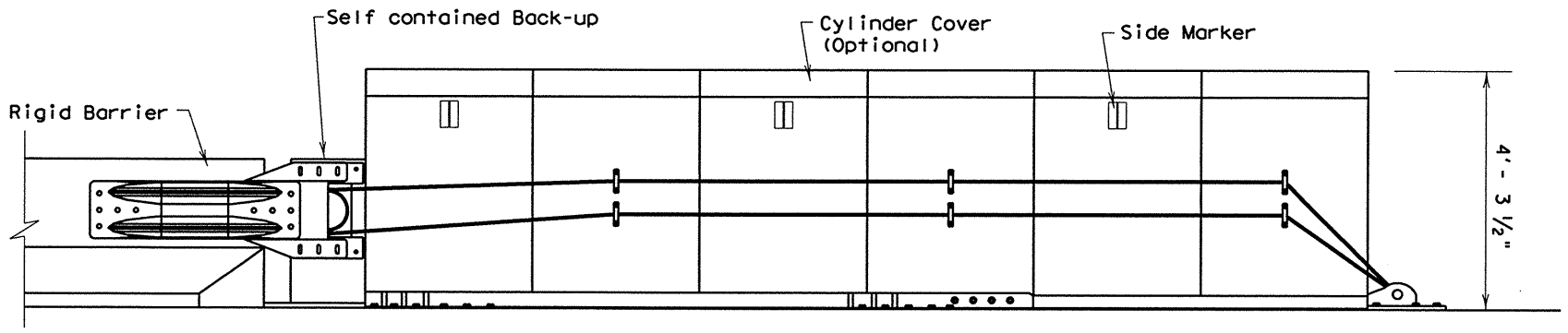

TYPICAL ELEVATION "B"

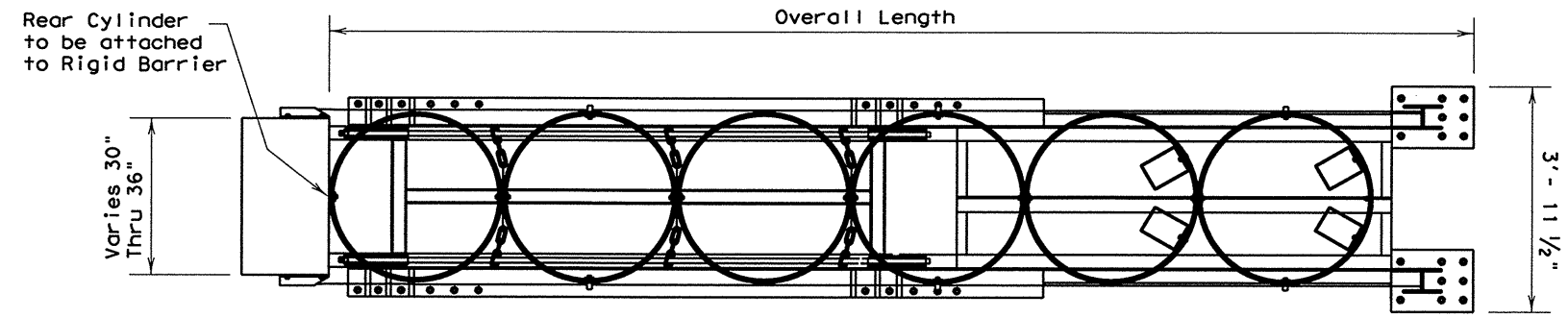

TYPICAL PLAN "S" (Side Mount, Concrete Backup Support)

(Cylinder Cover not shown for clarity)

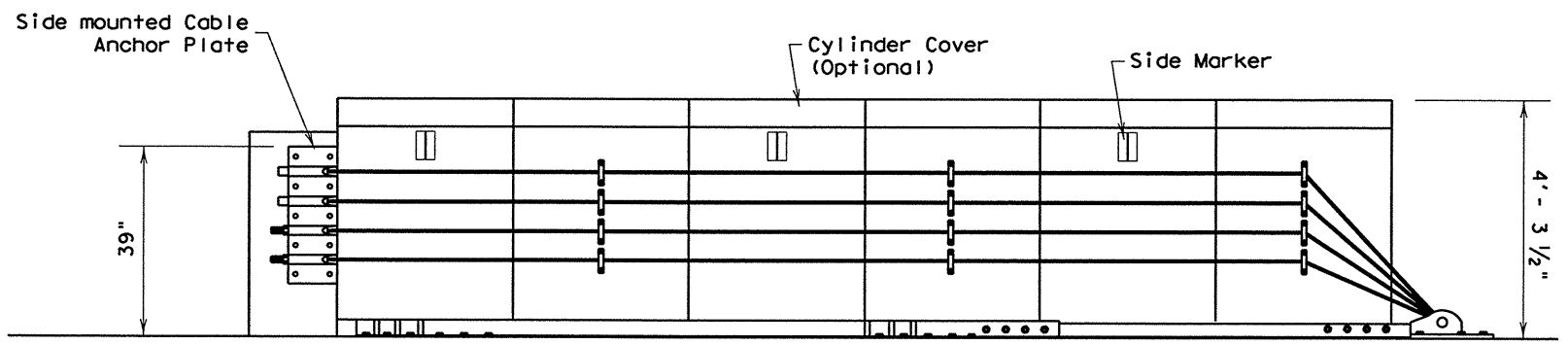

TYPICAL ELEVATION "S"

GENERAL NOTES

1. For additional information contact: Energy Absorption Systems Inc. 35 E. Wacker Dr. Suite 1100, Chicago, IL 60601. 1(888)323-6374.
2. The nose of the REACT 350 shall be clad with a plastic wrap with standard delineation adhered to the wrap and shall have a series of side marker reflectors on both sides of the unit. See site plan views for marker and plastic wrap color orientation.
3. All steel components to be hot dipped galvanized except stakes, drive spikes, threaded bolts in backup unit, and wedge fittings on cables.
4. The installation area should be free from curbs, elevated objects, or depressions. If the REACT system is to span expansion joints contact the manufacturer.
5. The REACT system should be approximately parallel with the barrier or ℄ of merging barriers. The maximum permissible cross-slope is 8%.

DESIGN DATA

	REACT 350.4-B	REACT 350.4-S	REACT 350.6-B	REACT 350.6-S	REACT 350.9-B	REACT 350.9-S	REACT 350 HS-B	REACT 350 HS-S
DESIGN SPEED	45 MPH	45 MPH	55 MPH	55 MPH	65 MPH	65 MPH	70 MPH	70 MPH
OVERALL LENGTH	15'-3"	13'-9"	21'-3"	19'-9"	30'-3"	28'-9"	30'-3"	28'-9"
OVERALL WEIGHT	2580 lb.	2340 lb.	3340 lb.	3100 lb.	4310 lb.	4070 lb.	4520 lb.	4280 lb.

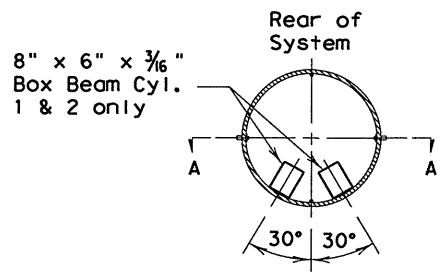

PLAN

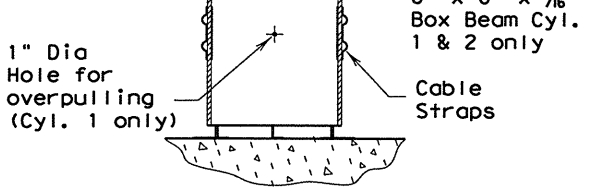

TYPICAL CYLINDER

SECTION A-A

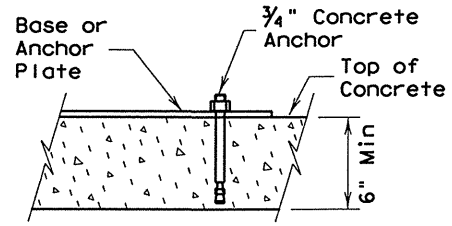

CONCRETE PAVEMENT DETAIL

NOTE: If separate pad is required for REACT, then the pad thickness shall be 8"

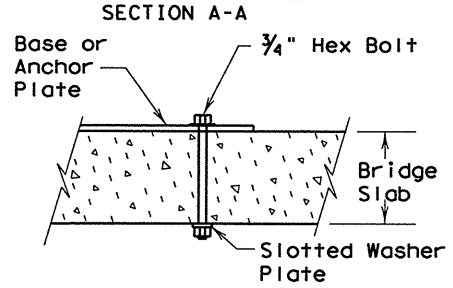

BRIDGE DECK DETAIL

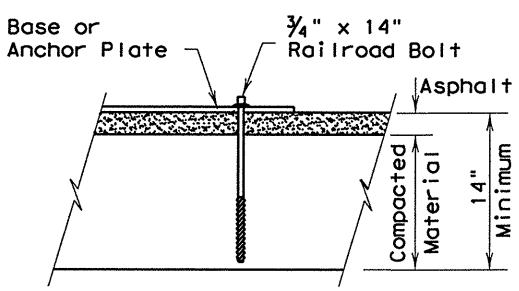

ASPHALT PAVEMENT DETAIL

Min. Asphalt thickness shall be 2"

FOR CONTRACTOR INFORMATION ONLY

SHEET 1 OF 2

Texas Department of Transportation
Design Division Standard

REUSABLE ENERGY ABSORBING CRASH TERMINAL (NARROW REACT 350)

REACT(N)-05

FILE: reactn05.dgn	DN: TxDOT	CK: AM	DW: BD	CK:
©TxDOT February 1998	CONT	SECT	JOB	HIGHWAY
REVISIONS	0027	09	099	US 90 A
	DIST	COUNTY		SHEET NO.
		HARRIS		48

DISCLAIMER:
The use of this standard is governed by the "Texas Engineering Practice Act". No warranty of any kind is made by TxDOT for any purpose whatsoever. TxDOT assumes no responsibility for the conversion of this standard to other formats or for incorrect results or damages resulting from its use.

DATE:
FILE:

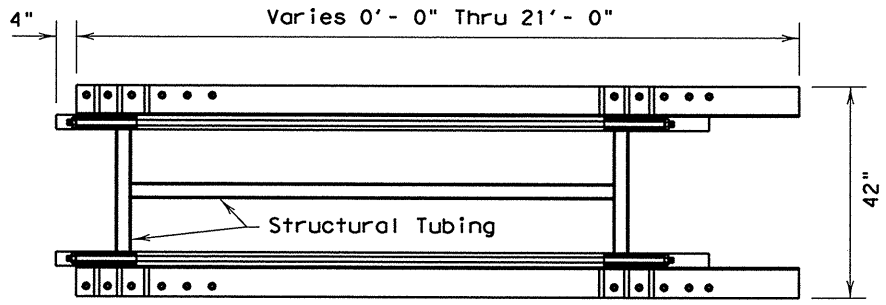

REAR SECTION OF BASE TRACK
(FOR UNITS WITHOUT SELF CONTAINED BACK-UP ONLY) "S"

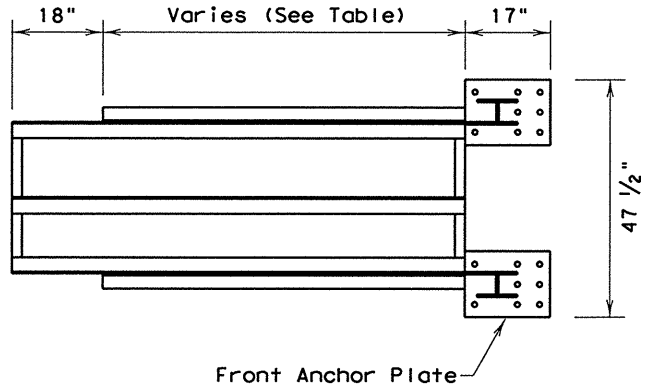

FRONT SECTION OF BASE TRACK

NUMBER OF CYLINDERS	FRONT BASE TRACK LENGTH
4	1'-5"
6	7'-5"
9	16'-5"
11	22'-5"

(The Front Section will vary depending on the size of the system)

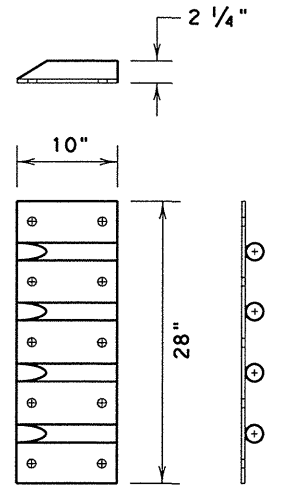

SIDE CABLE ANCHOR PLATE
(FOR UNITS WITHOUT A SELF CONTAINED BACK-UP ONLY)

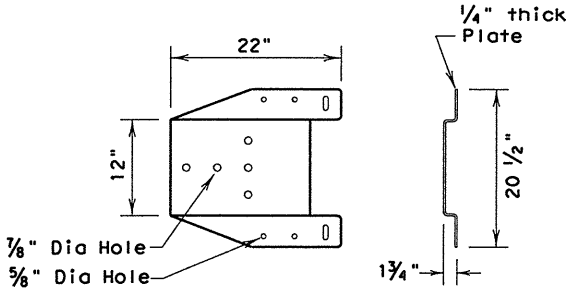

FOLDED TRANSITION PLATE
(For use in transition applications)

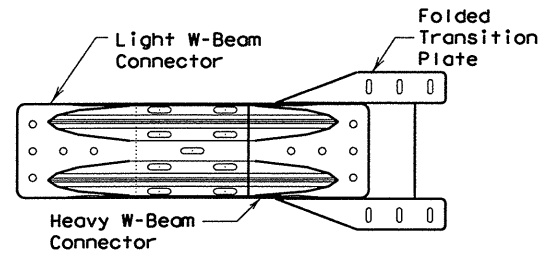

TRANSITION PLATE WITH W-BEAM CONNECTOR
(Connector overlap will vary per traffic direction - Reverse traffic shown)

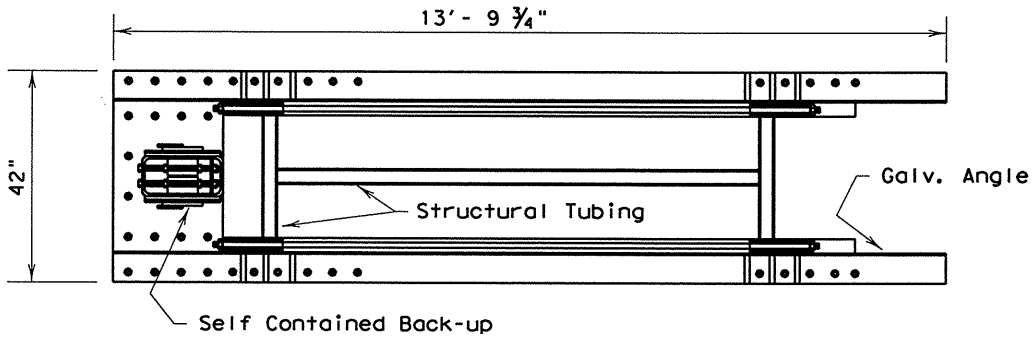

REAR SECTION OF BASE TRACK
(FOR UNITS WITH SELF CONTAINED BACK-UP ONLY) "B"

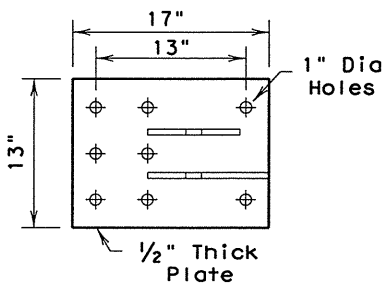

FRONT ANCHOR PLATE DETAIL

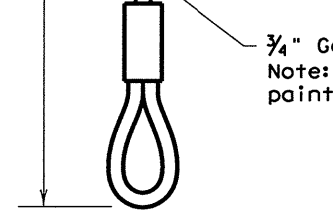

CABLE DETAIL
(FOR UNITS WITH SELF CONTAINED BACK-UP ONLY)

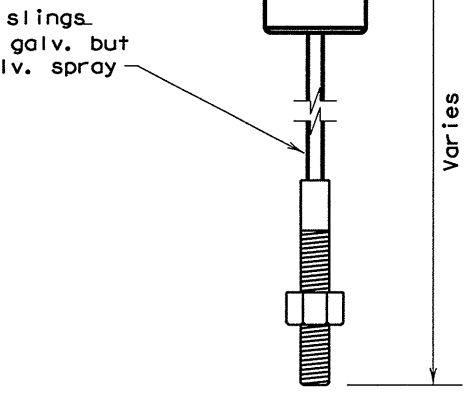

CABLE DETAIL
(FOR UNITS WITH SELF CONTAINED BACK-UP ONLY)

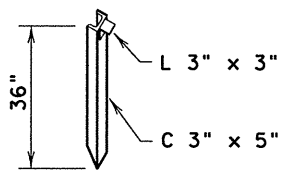

CHANNEL STAKE
(FOR USE W/ASPHALT PAVEMENT)

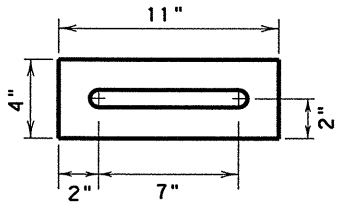

SLOTTED WASHER PLATE
(FOR BRIDGE DECK APPLICATIONS ONLY)

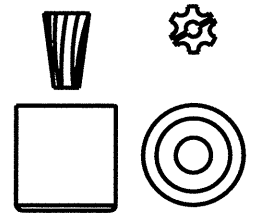

CABLE WEDGE

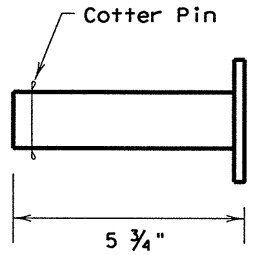

FRONT ANCHOR PIN DETAIL

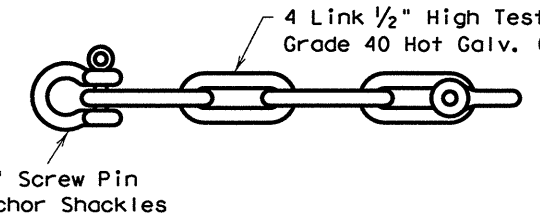

CHAIN DETAIL

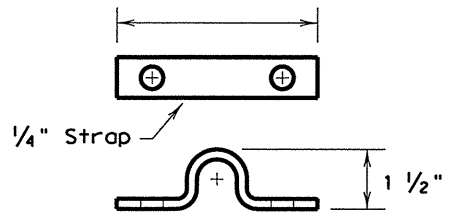

CABLE STRAP

FOR CONTRACTOR INFORMATION ONLY

SHEET 2 OF 2

Texas Department of Transportation
Design Division Standard

REUSABLE ENERGY ABSORBING CRASH TERMINAL
(NARROW REACT 350)
REACT(N)-05

FILE: reactn05.dgn	DN: TxDOT	CK: AM	DW: BD	CK:
© TxDOT February 1998	CONT	SECT	JOB	HIGHWAY
REVISIONS	0027	09	099	US 90 A
	DIST	COUNTY		SHEET NO.
		HARRIS		49

DISCLAIMER:
The use of this standard is governed by the "Texas Engineering Practice Act". No warranty of any kind is made by TxDOT for any purpose whatsoever. TxDOT assumes no responsibility for the conversion of this standard to other formats or for incorrect results or damages resulting from its use.

TYPICAL PLAN VIEW

MODEL B (Self Contained Steel Backup)

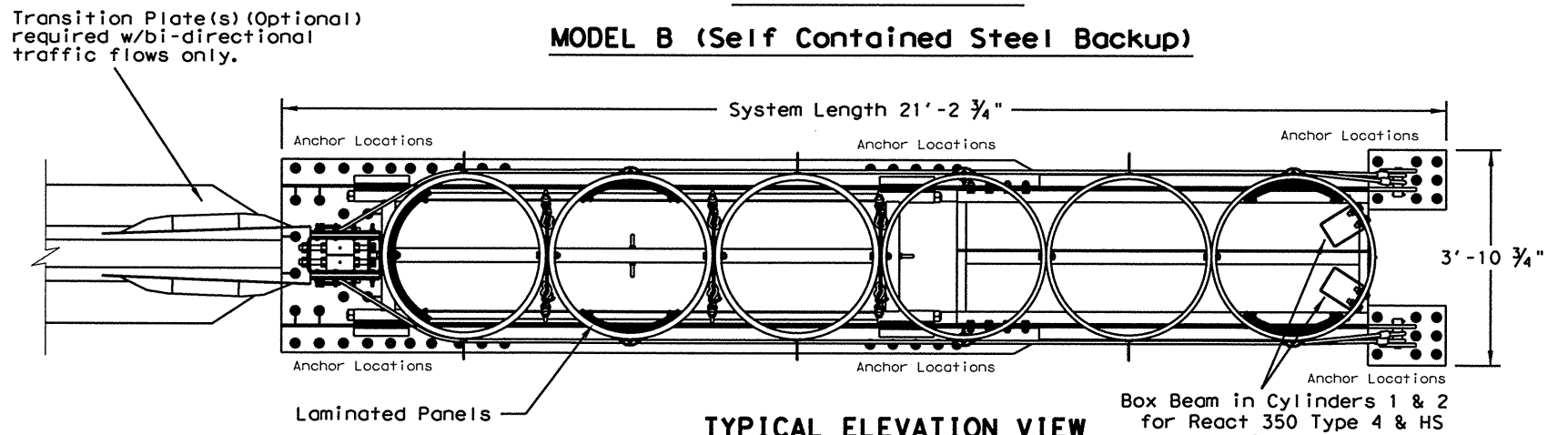

TYPICAL ELEVATION VIEW

MODEL B (Self Contained Steel Backup)

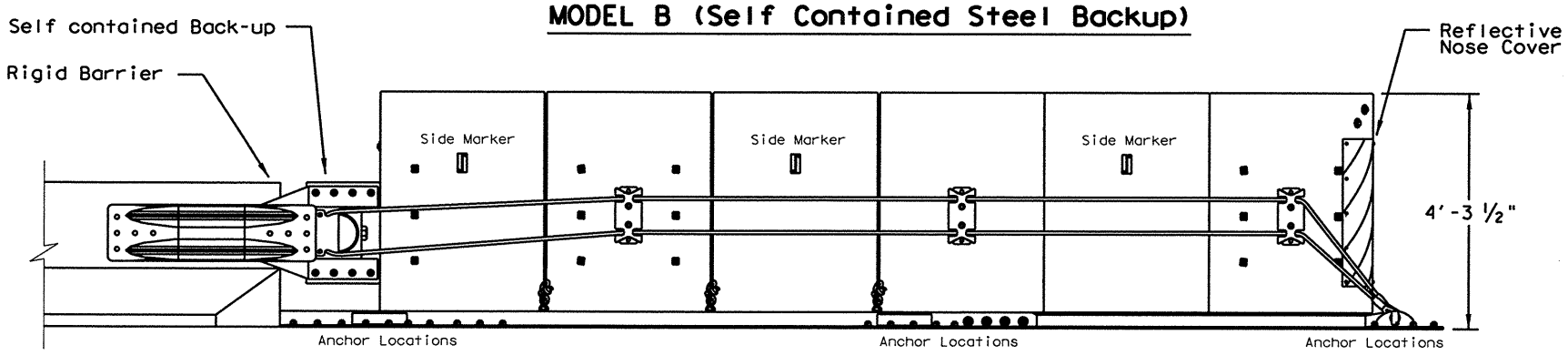

TYPICAL PLAN VIEW

MODEL C (Concrete Backup with Side Mount Anchors)

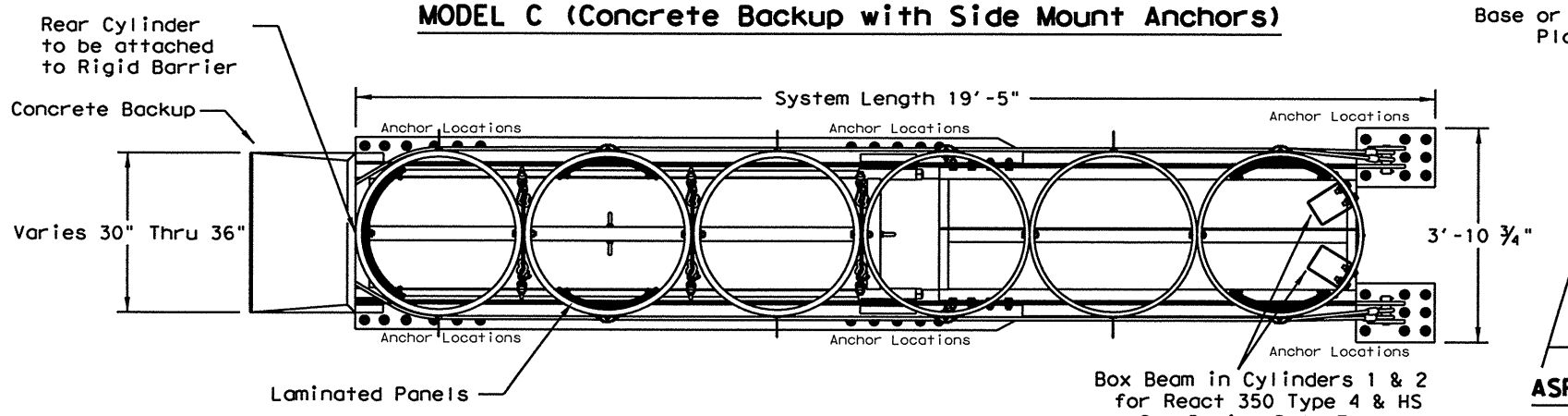

TYPICAL ELEVATION VIEW

MODEL C (Concrete Backup with Side Mount Anchors)

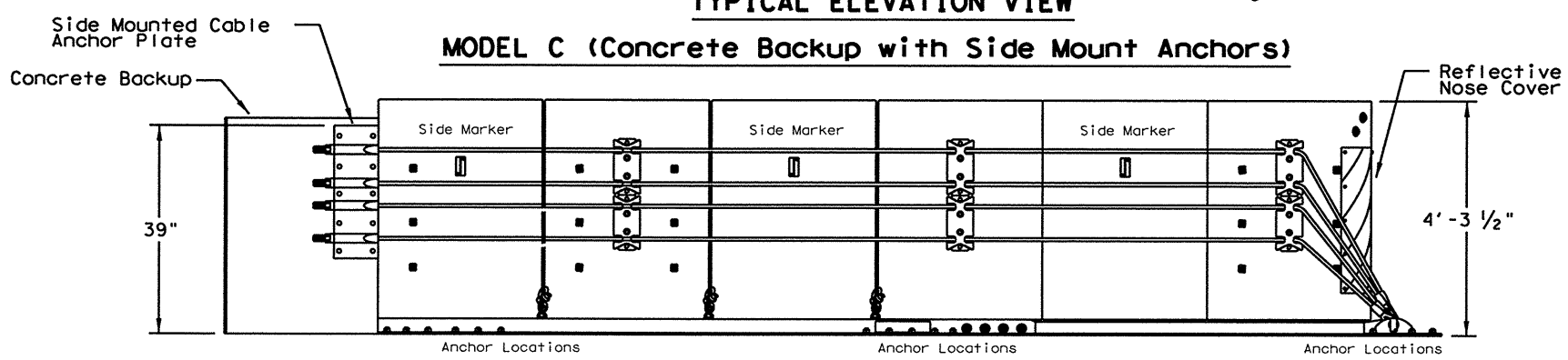

GENERAL NOTES

1. For additional information contact: Trinity Highway Products, LLC. 70 W. Madison St. Suite 2350, Chicago, IL 60602. 1(888)323-6374.
2. The nose of the REACT 350 shall be clad with a plastic wrap with standard delineation adhered to the wrap and shall have a series of side marker reflectors on both sides of the unit. See site plan views for marker and plastic wrap color orientation.
3. All steel components to be hot dipped galvanized except stakes, drive spikes, threaded bolts in backup unit, and wedge fittings on cables.
4. The installation area should be free from curbs, elevated objects, or depressions. If the REACT system is to span expansion joints contact the manufacturer.
5. The REACT system should be approximately parallel with the barrier or ℄ of merging barriers. The maximum permissible cross-slope is 8%.
6. REACT 350 II has laminated panels in cyliners 1, 5, & 6.

DESIGN DATA TABLE FOR REACT 350 AND REACT 350 II						
TYPE	REACT 350 4-B	REACT 350 4-C	REACT 350 II 6-B	REACT 350 II 6-C	REACT 350 HS-B	REACT 350 HS-C
DESIGN SPEED	45 MPH	45 MPH	62 MPH	62 MPH	70 MPH	70 MPH
OVERALL LENGTH	15'-3"	13'-9"	21'-3"	19'-5"	30'-3"	28'-9"
OVERALL WEIGHT	2580 lb.	2340 lb.	3340 lb.	3100 lb.	4520 lb.	4280 lb.

FOUNDATION AND ANCHORAGE TABLE FOR REACT 350 AND REACT 350 II			
	FOUNDATION TYPE	MINIMUM THICKNESS	ANCHORAGE
A	CONCRETE PAD OR ROADWAY	6"	MP-3 WITH 7" STUDS [5.5" EMBEDMENT]
B	ASPHALT OVER CONCRETE PAVEMENT	6" CONCRETE PAVEMENT	ANCHOR LENGTH REQUIRED IS 7" STUD PLUS ASPHALT THICKNESS
C	ASPHALT OVER BASE	6" ACP + 6" BASE	MP-3 WITH 18" STUDS [16.5" EMBEDMENT]
D	ASPHALT ONLY	8"	MP-3 WITH 18" STUDS [16.5" EMBEDMENT]

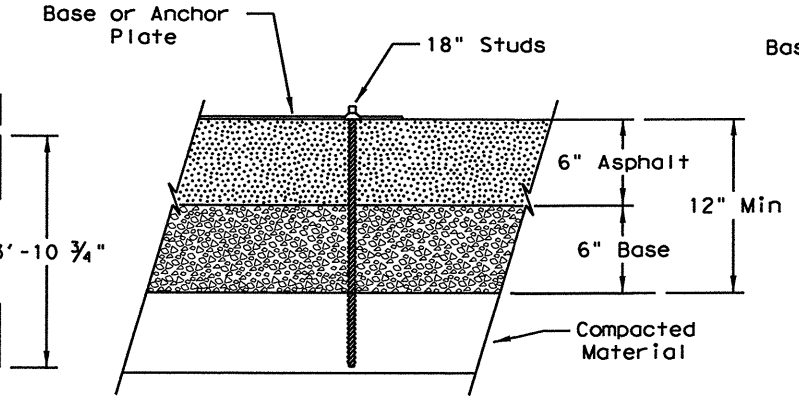

ASPHALT PAVEMENT DETAIL

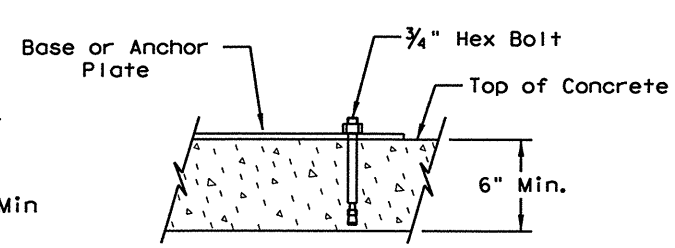

CONCRETE PAVEMENT DETAIL

NOTE:
If separate pad is required for REACT, then the pad thickness shall be 6"

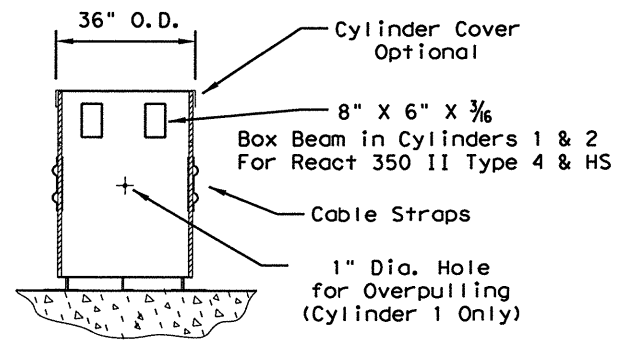

TYPICAL CYLINDER

Texas Department of Transportation

Design Division Standard

REUSABLE ENERGY ABSORBING CRASH TERMINAL
(REACT 350 NARROW)
(REACT 350 II NARROW)
REACT(N)-12

FILE: reactn12	DN: TxDOT	CK: AM	DW: VP	CK:
©TxDOT February 1998	CONT	SECT	JOB	HIGHWAY
REVISIONS	0027	09	099	US 90A
	DIST	COUNTY		SHEET NO.
	12	HARRIS		49A

DATE:
FILE:

DISCLAIMER:
The use of this standard is governed by the "Texas Engineering Practice Act". No warranty of any kind is made by TxDOT for any purpose whatsoever. TxDOT assumes no responsibility for the conversion of this standard to other formats or for incorrect results or damages resulting from its use.

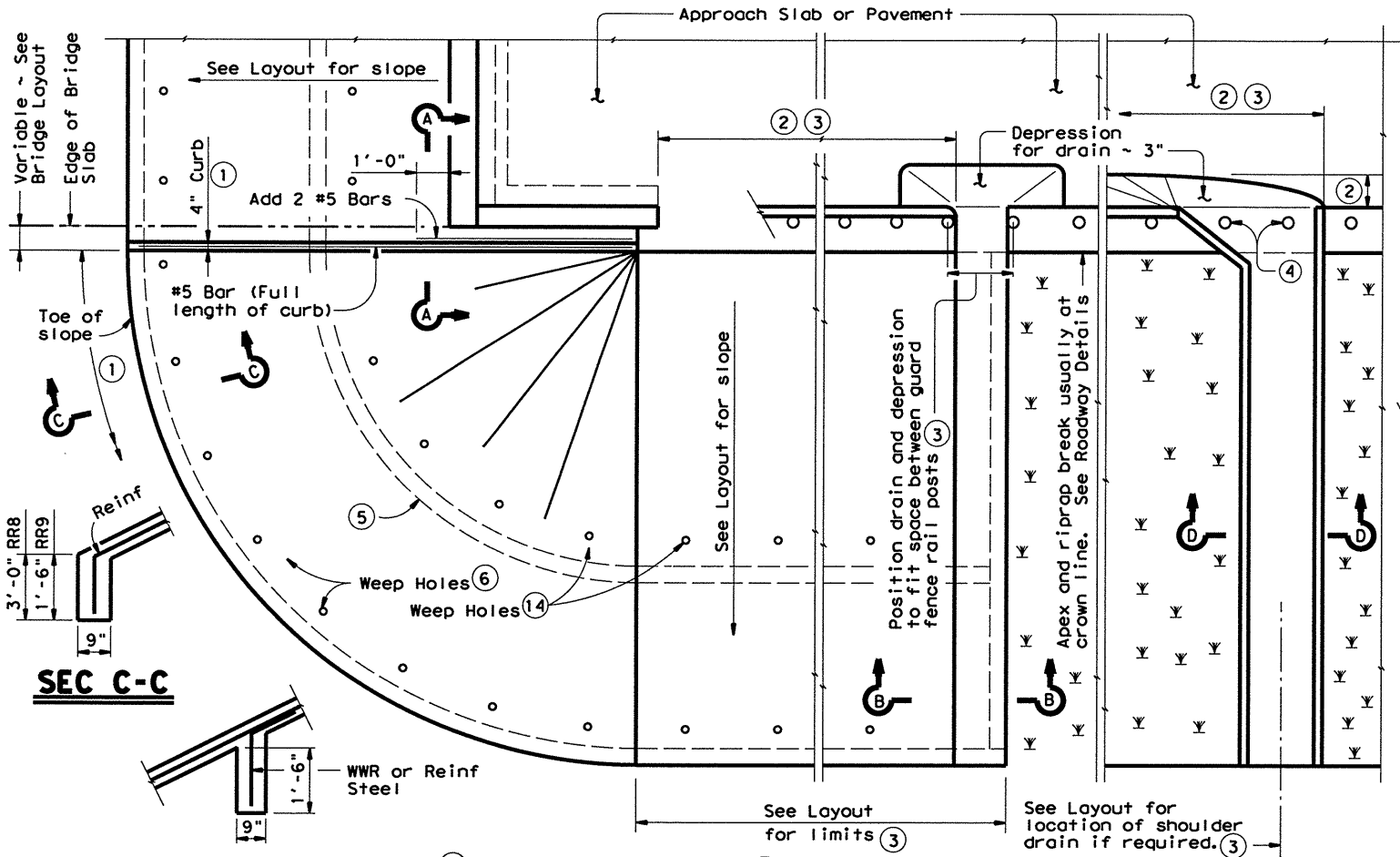

SEC C-C

INTERMEDIATE TOEWALL (5)

PLAN

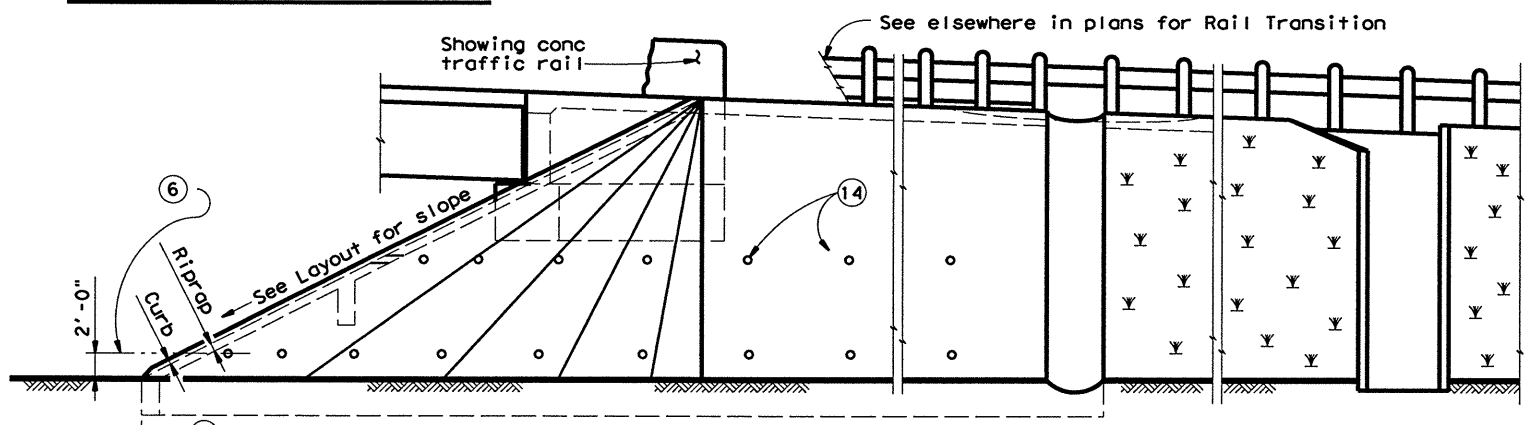

ELEVATION

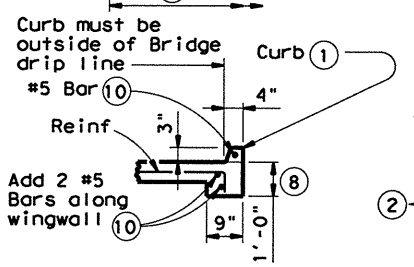

SEC A-A

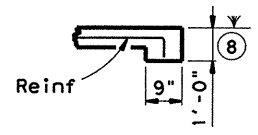

SEC B-B

(No Drain)

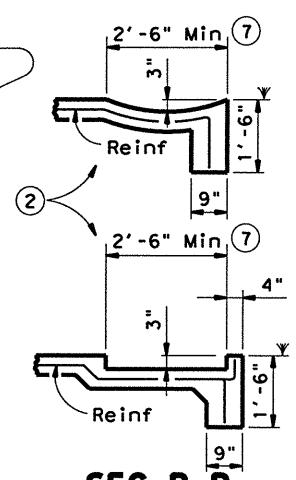

SEC B-B

(Shoulder Drain integral with riprap)

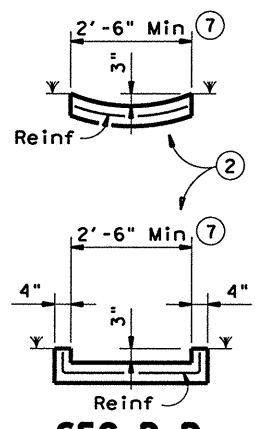

SEC D-D

(Shoulder Drain)

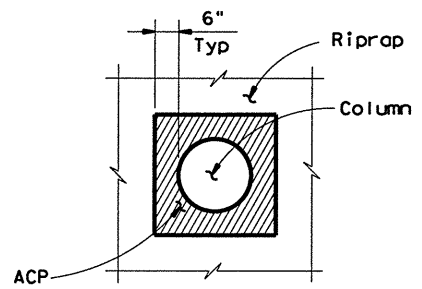

Riprap Blockout to be filled with ACP. (Subsidiary to Riprap)

RIPRAP DETAIL AT COLUMNS

(As directed by the Engineer)

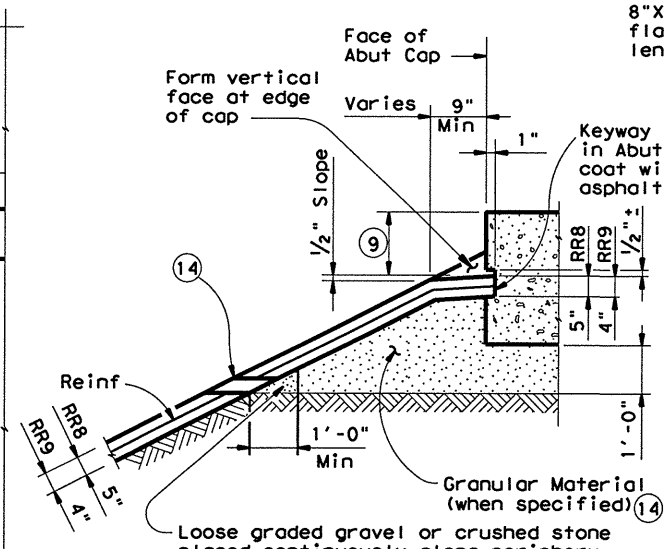

SHOWING KEYWAY OPTION

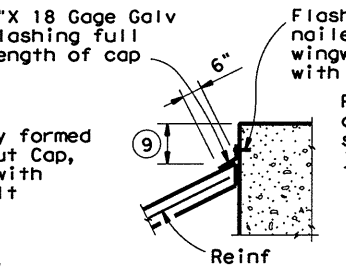

CAP OPTION A

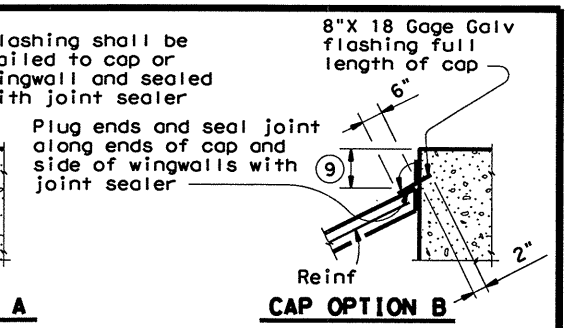

CAP OPTION B

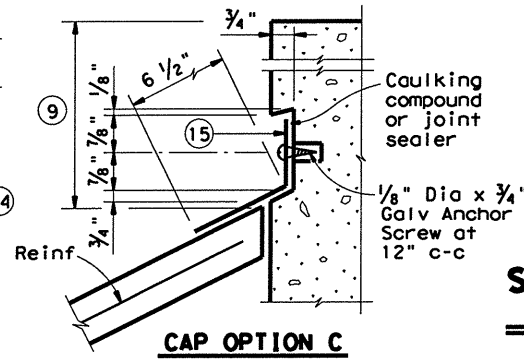

CAP OPTION C

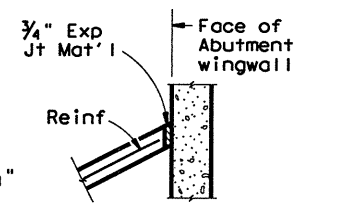

SECT THRU RIPRAP AT WINGWALL (12)

SECTIONS THRU RIPRAP AT CAP (11)

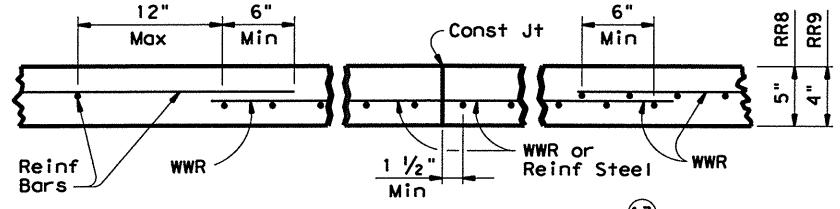

REINFORCEMENT DETAILS (13)

See General Notes for optional sythetic fiber reinforcement.

GENERAL NOTES:

Concrete shall be Class "B" with a minimum compressive strength of 2,000 psi unless noted elsewhere in plans.

All reinforcing steel shall be Grade 60.

Synthetic fibers listed on the "Fibers for Concrete" Material Producer List (MPL) may be used in lieu of steel reinforcing in riprap concrete unless noted otherwise.

Construction joints or grooved joints extending the full slant slope height shall be at intervals of approximately 20 feet unless otherwise directed by the Engineer.

Hardware cloth, loose graded stone behind weep holes, flashing, or other sealing material shall not be paid for directly but shall be subsidiary to the bid item "Riprap".

Unless specified elsewhere in the plans to be only reinforcing bars, the riprap reinforcing may be composed of reinforcing bars, Welded Wire Reinforcement (WWR), or any suitable combination of both types.

See Layout for limits of riprap.

RR8 is to be used on stream crossings.

RR9 is to be used on other embankments.

(1) When riprap is shown extended around header on layout, extend slab and toewall as shown and eliminate 4" curb.

(2) Limits and configuration of drains and depressions shall be as shown elsewhere in plans or as directed by the Engineer.

(3) Location of shoulder drain must consider limitations imposed by rail transition. Do not locate shoulder drains at expansion joints between approach slab and concrete pavement.

(4) See details elsewhere in plans for installation of guard fence posts through concrete riprap.

(5) Provide Intermediate toewall only when designated elsewhere in the plans or included in the specifications.

(6) Provide lower level of 2" Dia weep holes at 10' c-c backed by 1 CF packet of gravel and galvanized hardware cloth at all locations unless directed by the Engineer to eliminate.

(7) Wider or other drain configurations shall be used if shown elsewhere in plans or if directed by the Engineer.

(8) Wall extension may be reduced or modified if approved by the Engineer. Wall extension shall be increased to 1'-6" whenever the optional intermediate toewall is called for in the plans.

(9) Top of cap to top of riprap dimension varies as directed by the Engineer. Should be 9" Min for beam/slab type bridges and 1'-6" for slab span, box beam, or slab beam bridges.

(10) #5 bars shown are required even when synthetic fiber reinforcing option is selected.

(11) The sealing option of the joint between the face of cap and riprap shall be as designated by the Engineer or as shown elsewhere on plans.

(12) Flashing (shown in Cap Option A) may be used at wingwall in addition to Exp Jt Mat'l if shown on plans or directed by the Engineer.

(13) Reinforcing bars shall be #3 at 18" Spa c-c. Welded Wire Reinforcement (WWR) shall be 6X6-W2.9XW2.9. Combinations of WWR and reinforcing bars may be used if both are permitted. Lap splices shall be a minimum of 6 inches, measured from the transverse wire of WWR, and the ends of reinforcing bars.

(14) If granular material is specified, provide upper level of 2" Dia weep holes at 10' c-c backed by galvanized hardware cloth.

(15) 8" x 18 Gage Galv Sheet Metal

FOR CONTRACTOR'S INFORMATION ONLY:
5" of RR8 = 0.015 CY/SF
4" of RR9 = 0.012 CY/SF
#3 Reinf at 18" c-c = 0.501 Lbs/SF
6X6-W2.9XW2.9 = 0.394 Lbs/SF

Texas Department of Transportation
Bridge Division

CONCRETE RIPRAP AND SHOULDER DRAINS EMBANKMENTS AT BRIDGE ENDS (TYPES RR8 & RR9)

CRR

FILE: crrstde1.dgn	DN: TxDOT	CK: TxDOT	DW: TxDOT	CK: TxDOT
© TxDOT April 2006	DISTRICT	FEDERAL AID PROJECT		SHEET
REVISIONS 08-07: Revised Note 6, removed "8" reference, added Note 14 & changed weep hole size & spacing. 04-11: Added fiber reinforcement.	12			50
	COUNTY	CONTROL	SECT	JOB	HIGHWAY
	HARRIS	0027	09	099	US 90A

PATH:
LEVELS DISPLAYED

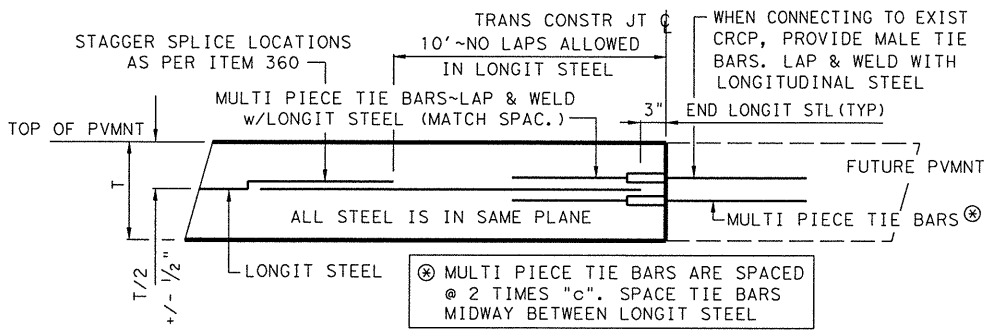

SECTION - SINGLE STEEL MAT

AT END OF PROJECT OR TEMPORARY END OF PAVEMENT

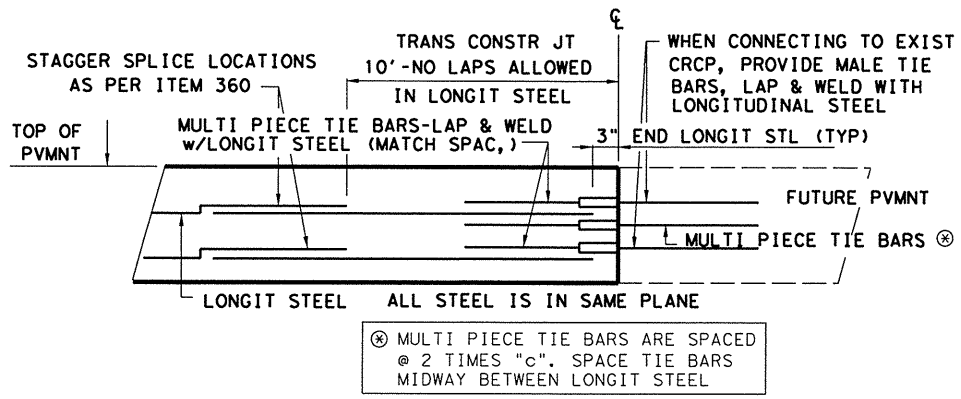

SECTION - DOUBLE STEEL MAT

AT END OF PROJECT OR TEMPORARY END OF PAVEMENT

LONGITUDINAL DOWEL JOINT DETAILS

LOCATE WHERE SHOWN IN THE PLANS OR AS APPROVED. CONTRACTOR MAY USE EITHER METHOD

SINGLE STEEL MAT

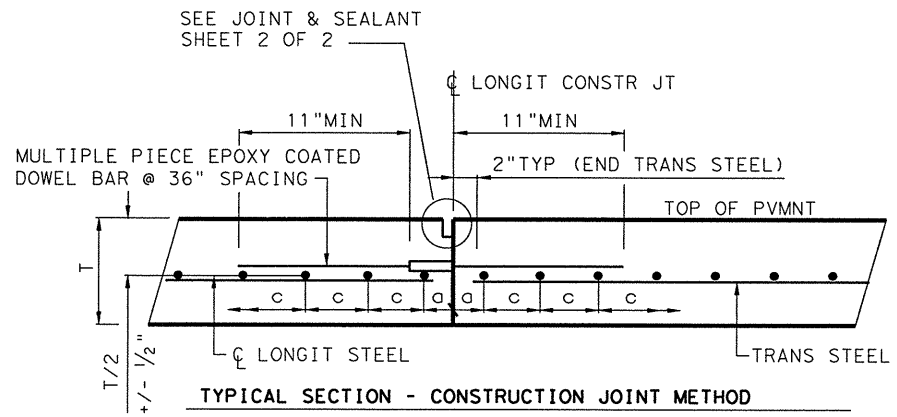

TYPICAL SECTION - CONSTRUCTION JOINT METHOD

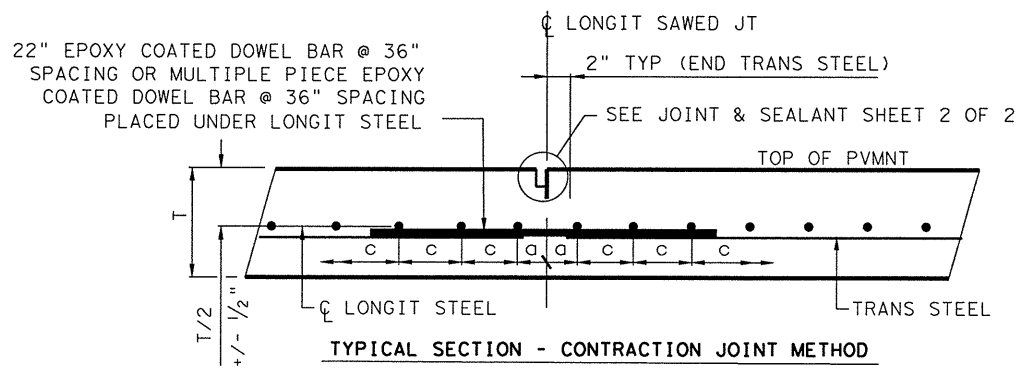

TYPICAL SECTION - CONTRACTION JOINT METHOD

DOUBLE STEEL MAT

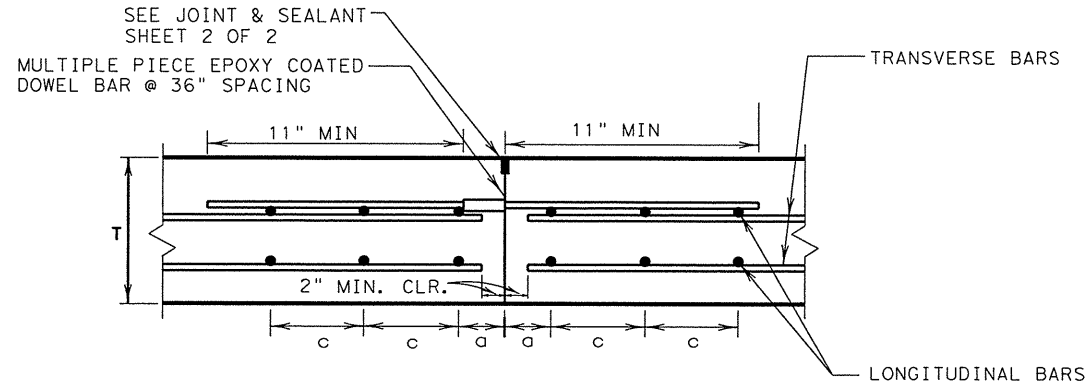

TYPICAL SECTION - CONSTRUCTION JOINT METHOD

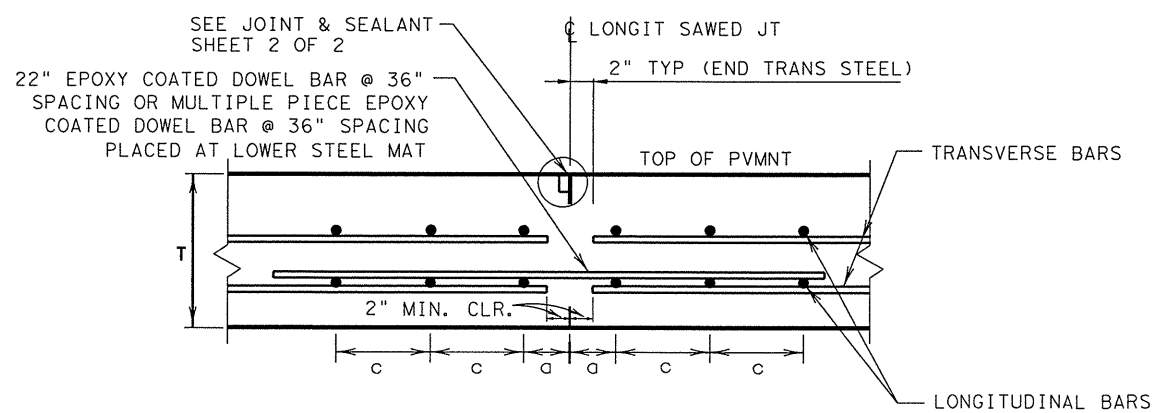

TYPICAL SECTION - CONTRACTION JOINT METHOD

GENERAL NOTES

1. DETAILS FOR 6.0 IN. TO 13.0 IN. THICK CONCRETE PAVEMENT ARE SHOWN ON STANDARD CRCP(1)-11. DETAILS FOR 14 IN. TO 15 IN. THICK CONCRETE PAVEMENT ARE SHOWN ON STANDARD CRCP(2)-11.
2. USE COARSE AGGREGATE TO PRODUCE CONCRETE WITH A COEFFICIENT OF THERMAL EXPANSION (CTE) LESS THAN 5.0×10^{-6} in/in/°F. PRIOR TO CONSTRUCTION SUBMIT TEST SPECIMENS TO TxDOT, CONSTRUCTION DIVISION, FOR AGGREGATE ACCEPTANCE. PROVIDE SAMPLES OR TEST SPECIMENS AS DIRECTED. TxDOT CONSTRUCTION DIVISION WILL PERFORM THE TESTING. TEST RESULTS ARE FINAL. TESTING IS REQUIRED FOR NATURALLY OCCURING AGGREGATES.
3. DOWELS AND TIE BARS - DOWELS ARE ONE INCH MINIMUM DIAMETER. ENSURE DOWELS ARE FREE OF GREASE AND ARE EPOXY COATED. DO NOT SHEAR CUT DOWELS DURING FABRICATION. PROVIDE TIE BARS PER ITEM 360. FURNISH MULTI PIECE TIE BARS AND DOWELS WITH STOP COUPLINGS AND WITH THREADS ON THE BARS.
4. USE CHAIRS OF SUFFICIENT STRUCTURAL QUALITY AND NUMBER TO SUPPORT THE MAT TO THE VERTICAL TOLERANCES. CHAIRS WILL BE APPROVED BY THE ENGINEER AND DO NOT REQUIRE GALVANIZING. MAXIMUM CHAIR SPACING IS 30" TRANSVERSELY AND 48" LONGITUDINALLY. WHEN USING THE HARDIE CHAIR-LOK SYSTEM, THE CHAIR SPACING MAY BE EVENLY SPACED INTO A DIAMOND OR SQUARE PATTERN - DO NOT EXCEED 1.67 SY PER CHAIR NOR 60" LONGITUDINAL SPACING.
5. MECHANICALLY PLACING REINFORCING STEEL IS NOT ALLOWED. NO BARS, DOWELS OR TIE BARS MAY BE VIBRATED INTO POSITION.
6. WHERE DIFFERENT THICKNESS PAVEMENTS MEET, TRANSITION THE THINNER SECTION TO THE THICKER SECTION OVER A DISTANCE OF 20 FT. PLACE REINFORCING STEEL WITHIN THE TRANSITION THE SAME AS IN THE THICKER PAVEMENT.
7. PERFORM WELDING PER ITEM 448. FURNISH WELDABLE REBAR PER ITEM 440.

Texas Department of Transportation
Houston District

CONTINUOUSLY REINFORCED CONCRETE PAVEMENT HOUSTON SUPPLEMENT CRCP-HS

© TxDOT APR. 2012

REVISIONS
4/12 CHANGED CTE FROM 6.0 TO 5.0

DN: -	CK: -	DW: -	CK: -	
DISTRICT	PROJECT NO.			SHEET
12				51
COUNTY	CONTROL	SECTION	JOB	HIGHWAY
HARRIS	0027	09	099	US90A

STD-R1A

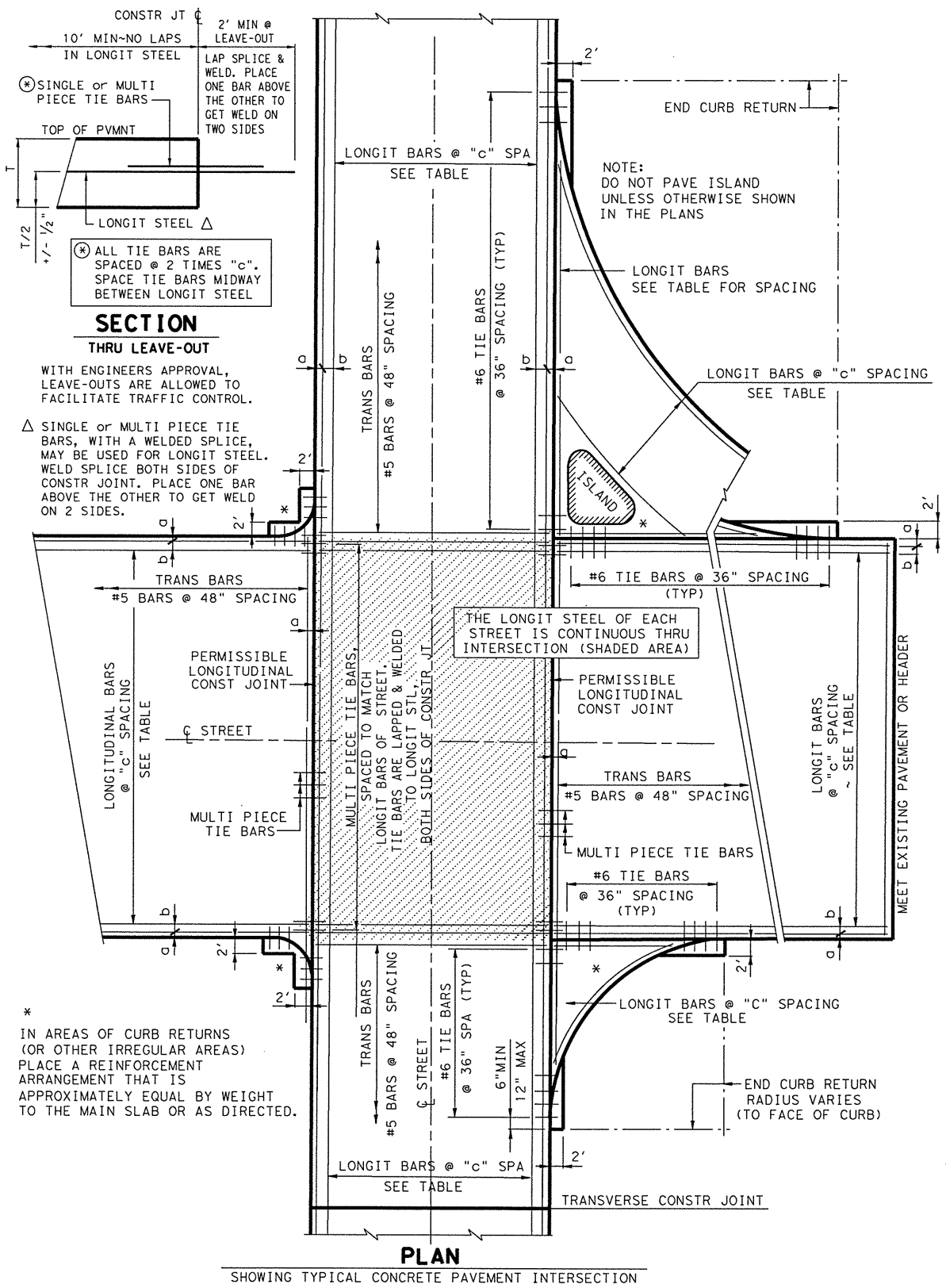

PLAN

SHOWING TYPICAL CONCRETE PAVEMENT INTERSECTION

(1) AS AN AID IN SUPPORTING REINFORCEMENT, ADDITIONAL LONGITUDINAL BARS MAY BE USED IN THE SLAB WITH THE APPROVAL OF THE ENGINEER. FURNISH SUCH BARS AT NO EXPENSE TO THE DEPARTMENT.

(2) LONGITUDINAL SLAB BAR MAY BE ADJUSTED LATERALLY 3" +/- TO TIE REINFORCING.

(3) ANCHORAGE BAR SHOWN IS FOR AN SSTR OR T501 RAIL. SEE RAILING DETAIL SHEET FOR SPACING OF BAR P. FOR OTHER RAIL TYPES SEE RAILING DETAIL SHEET.

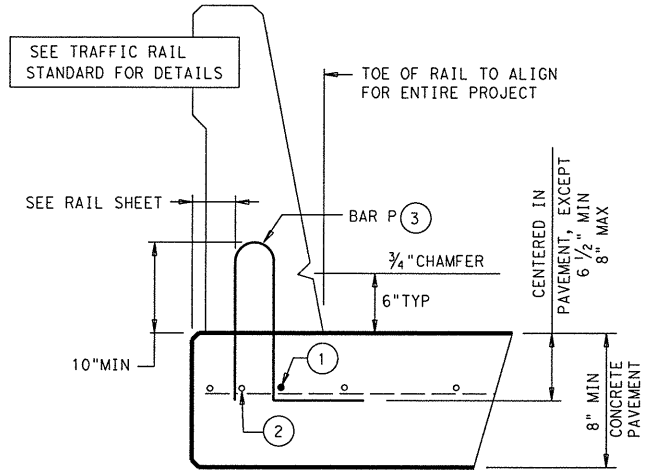

RAIL DETAIL

FOR ADDITIONAL DETAILS, SEE RAIL STANDARD SHEET.
THE MINIMUM LENGTH OF A CONCRETE RAILING PANEL IS FIVE FEET.

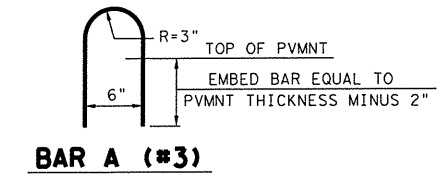

BAR A (#3)

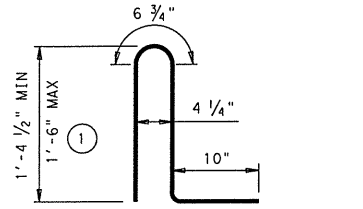

BAR P (#5)
RAIL ANCHOR INSTALLED IN PAVEMENT (3)

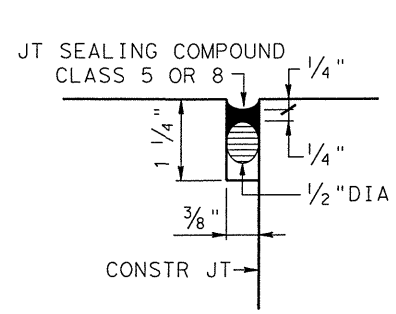

DETAIL 1 ~ CONSTR JOINT

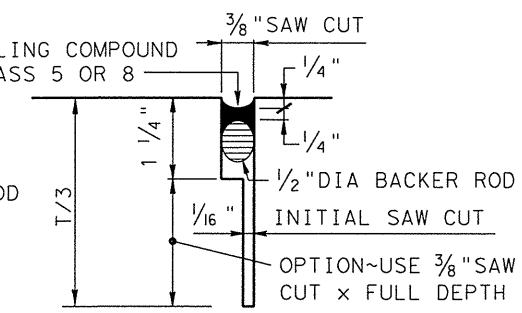

DETAIL 2 ~ SAWED JOINT

JOINT AND SEALANT DETAILS

USE METHOD B ONLY

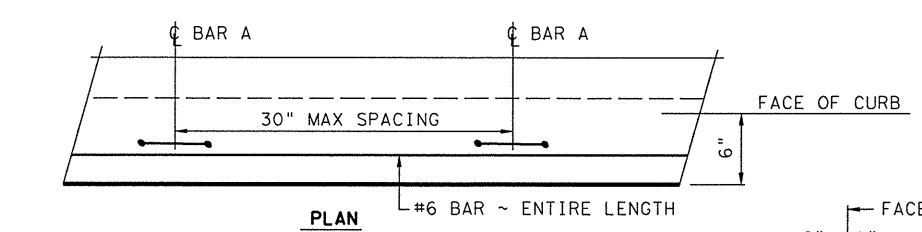

PLAN

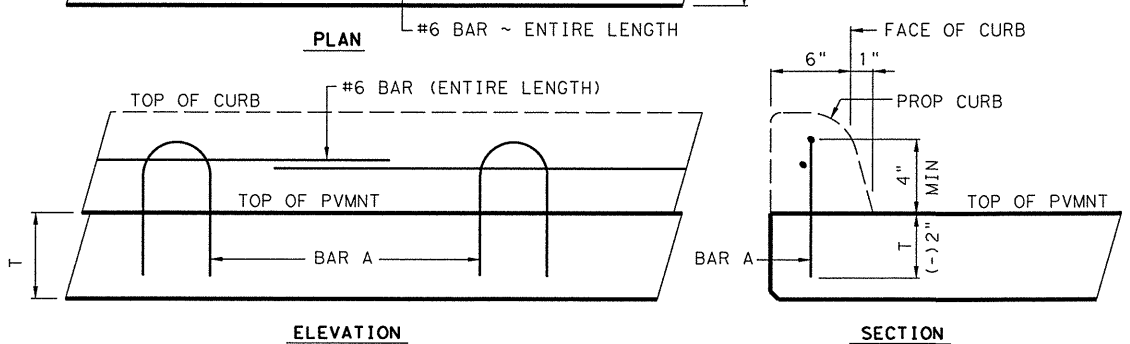

ELEVATION SECTION

CURB DETAIL

Texas Department of Transportation
Houston District

CONTINUOUSLY REINFORCED CONCRETE PAVEMENT HOUSTON SUPPLEMENT CRCP-HS

© TxDOT APR. 2012

DN: -	CK: -	DW: -	CK: -	
REVISIONS 4/12 CHANGED CTE FROM 6.0 TO 5.0 (ON SHEET 1)	DISTRICT	PROJECT NO.		SHEET
	12			52
	COUNTY	CONTROL	SECTION	JOB	HIGHWAY
	HARRIS	0027	09	099	US90A

STD-R1B

TYPE OF WORK — ITEMS AND REQUIREMENTS FOR EACH TYPE OF WORK

BLOCK SODDING	PERMANENT SEEDING	TEMPORARY SEEDING	Reference Item 161, 162, 164, 166, 168 of the Texas Standard Specifications for Construction and Maintenance of Highways, Streets and Bridges 2004 for specifications, dimensions, volumes and measurements that are not shown. Use latest Houston District, Special Provisions for those items indicated.		
	✓		**161-2017 COMPOST MANUF TOPSOIL (BIP)(4") SY**	APPLICATION RATE Item 161.2.A. Compost Manufactured Topsoil (CMT)	Item 161.2. Materials. Submit quality control (QC) documentation to the Engineer. Compost producer's STA certification must be dated to meet STA requirements (certification must be within 30 or 90 days per STA requirements). Lab analysis performed by an STA-certified lab must be dated within 30 days before delivery of the compost.
✓			**162-2002 BLOCK SODDING SY**	GRASS SPECIES Item 162.2. Materials. Common Bermuda (Cynodon Dactylon)	Item 162.2.A. Block Sod. Use block type sod only. Roll type or rolled sod is not allowed. Place sod within 48 hours of delivery to site. Place sod blocks with joints alternating on each row to prevent continuous joint lines. Peg sod as needed with wood pegs to hold sod in place. Pegging sod is incidental.
	✓		**164-2037 DRILL SEEDING(PERM)(URBAN)(SANDY) SY** Item 164.1. Description Provide and install seeding as shown on plans →	PLANTING MONTH / SEED MIX March, April, May, June, July, August, September, October: Foxtail Millet (Setaria italica) - 34.0 lbs PLS/acre Green Sprangletop (Leptochloa dubia) - 4.0 lbs PLS/acre Hulled - Bermudagrass (Cynodon dactylon) - 26.0 lbs PLS/acre Little Bluestem (Schizachyrium scoparium) - 1.4 lbs PLS/acre Sideoats Grama (Bouteloua curtipendula) - 3.2 lbs PLS/acre November, December, January, February: Oats (Avena sativa) - 72.0 lbs PLS/acre Green Sprangletop (Leptochloa dubia) - 4.0 lbs PLS/acre Unhulled - Bermudagrass (Cynodon dactylon) - 26.0 lbs PLS/acre Little Bluestem (Schizachyrium scoparium) - 1.4 lbs PLS/acre Sideoats Grama (Bouteloua curtipendula) - 3.2 lbs PLS/acre	PLS (Pure Live Seed) Provide documentation of PLS requirements per Item 164.2.A. CONSTRUCTION. Cultivate the area to a depth of 4 inches before placing the seed unless otherwise directed. When performing permanent seeding after an established temporary seeding, cultivate the seedbed to a depth of 4 inches or mow the area before placement of the permanent seed. Plant the seed and place the straw or hay mulch after the area has been completed to lines and grades as shown on the plans. Drill Seeding. Plant seed or seed mixture uniformly over the area shown on the plans at a depth of 1/4 to 1/3 inch using a cultipacker(turfgrass) type seeder. Plant seed along the contour of the slopes. Use broadcast seeding method where site conditions prevent drill seeding method. Broadcast Seeding. Distribute the dry seed or dry seed mixture uniformly over the areas shown on the plans using hand or mechanical distribution on top of soil.
	✓		**164-2052 BROADCAST SEED(PERM)(SPECIAL MIX) SY** Item 164.1. Description Provide and install seeding as shown on plans →		
		✓	**164-2051 DRILL SEED(TEMP)(WARM OR COOL) SY** Item 164.1. Description Provide and install seeding as shown on plans →	PLANTING MONTH / SEED MIX March, April, May, June, July, August, September, October: Foxtail Millet (Setaria italica) - 34.0 lbs PLS/acre November, December, January, February: Oats (Avena sativa - 72.0 lbs PLS/acre	
		✓	**164-2009 BROADCAST SEED(TEMP)(WARM) SY** Item 164.1. Description Provide and install seeding as shown on plans →		
	✓	✓	**162-2003 STRAW OR HAY MULCH SY**	APPLICATION RATE Immediately after planting the seed or seed mixture, apply straw or hay mulch uniformly over the seeded area. Apply straw or hay mulch at 2 tons per acre. Use tacking agent with straw or hay mulch as described on this sheet.	Use straw or hay mulch in conformance with Article 162.2.E, "Mulch." Use biodegradable tacking agents only applied at a rate in accordance with manufacturer's recommendations. Use the following products or an approved equal(see note this sheet): Conweb/Contac Guar Gum, Profile Products Corporation, (307) 655-9565, Ramtec/Procol/Viscol Guar Gum, Ramtec Corporation, (800) 366-1180
✓	✓	✓	**166-2001 FERTILIZER AC** Item 166.2. Materials Use fertilizer as shown on plans →	APPLICATION RATE Deliver and evenly distribute fertilzer at a rate of 4000 lbs/acre.	Use a **NON-CHEMICAL** fertilizer which meets all the following criteria: (1) BRAND NAME must be registered with the Texas State Chemist as a commercial fertilizer. (2) Meets USEPA guidelines for unrestricted use. (3) Derived from biological sources such as, but not limited to: sewage sludge, manures, vegetation, etc. (4) In granular form and essentially dust free. Submit proof of registration and nutrient source to Engineer. Use the following products or an approved equal(see note this sheet): Sustanite-standard grade, Automation Nation, Inc., 713-675-4999 Milorganite, MMSD, 800-287-9645 Agricultural Organic P/L, Ag Org, INC., 713-523-4396 Enviroguard Plus, Tascon, Inc., 800-937-1774 / 713-937-0900
✓	✓	✓	**168-2001 VEGETATIVE WATERING MG**	APPLICATION RATE Item 168.3 Construction. 6000 gallons/acre per working day x 20 consecutive working days = 120,000 gallons total/acre	Begin watering immediately after installation of seed or sod. Replace, fertilize, and water any seed or sod in poor condition due to the failure to apply the specified amount of water within the time allowed at Contractor's expense.

SEQUENCE OF WORK

BLOCK SOD	PERMANENT SEEDING	TEMPORARY SEEDING
1. FERTILIZER 2. CULTIVATE SOIL (ITEM 162.3) 3. BLOCK SOD 4. VEGETATIVE WATERING	1. FERTILIZER 2. COMPOST MANUFACTURED TOPSOIL 3. CULTIVATE SOIL (ITEMS 164.3 AND 161.3.A) 4. PERMANENT SEEDING 5. STRAW OR HAY MULCH 6. VEGETATIVE WATERING	1. FERTILIZER 2. CULTIVATE SOIL (PER ITEM 164.3) 3. TEMPORARY SEEDING 4. STRAW OR HAY MULCH 5. VEGETATIVE WATERING

© 2004

Texas Department of Transportation

HOUSTON DISTRICT

FERTILIZER, SEED, SOD, STRAW, COMPOST, AND WATER

SHEET 1 OF 1

REVISIONS
2/2009 ADDED NOTES
6/2012 SPELLING CHANGES.

FILE: FEBRUARY 2009

ORIGINAL:

FED DIV	STATE	PROJECT NUMBER			SHEET
6	TEXAS				53
DIST	COUNTY	CONTROL	SECT	JOB	HIGHWAY
12	HARRIS	0027	09	099	US 90 A

STD K-1

DISCLAIMER:
The use of this standard is governed by the "Texas Engineering Practice Act". No warranty of any kind is made by TxDOT for any purpose whatsoever. TxDOT assumes no responsibility for the conversion of this standard to other formats or for incorrect results or damages resulting from its use.

DATE:
FILE:

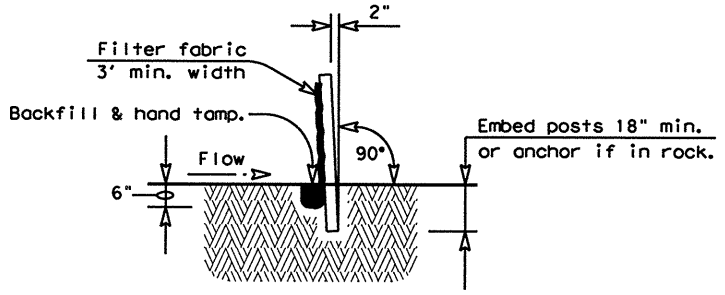

SECTION A-A

GENERAL NOTES

1. The guidelines shown hereon are suggestions only and may be modified by the Engineer.

PLAN SHEET LEGEND

Sediment Control Fence —— SCF ——

SEDIMENT CONTROL FENCE USAGE GUIDELINES

A sediment control fence may be constructed near the downstream perimeter of a disturbed area along a contour to intercept sediment from overland runoff. A 2 year storm frequency may be used to calculate the flow rate to be filtered.

Sediment control fence should be sized to filter a max. flow through rate of 100 GPM/FT^2. Sediment control fence is not recommended to control erosion from a drainage area larger than 2 acres.

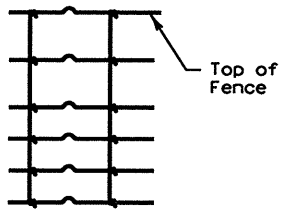

Galv. Hinge joint knot woven mesh (12.5 Ga. Min.) requires a minimum of five horizontal wires spaced at a max. 12 inches apart and all vertical wires spaced at a max. 12 inches apart.

Hinge Joint Knot Woven Mesh (Option)

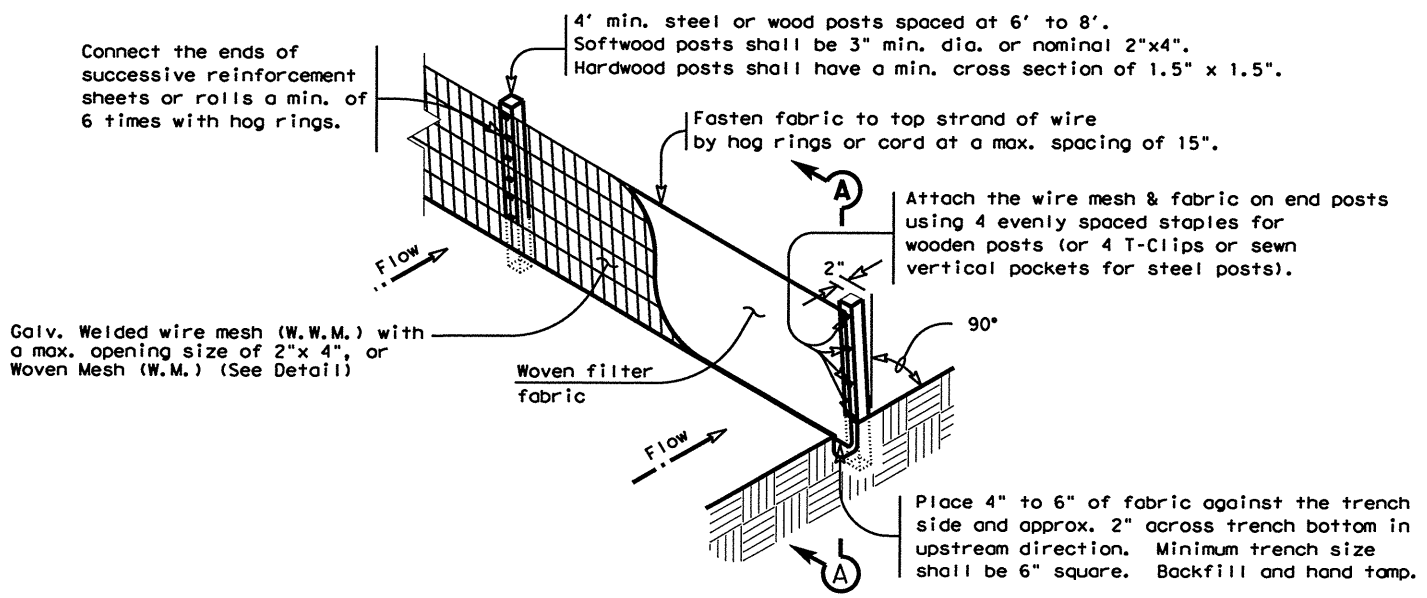

TEMPORARY SEDIMENT CONTROL FENCE

SCF

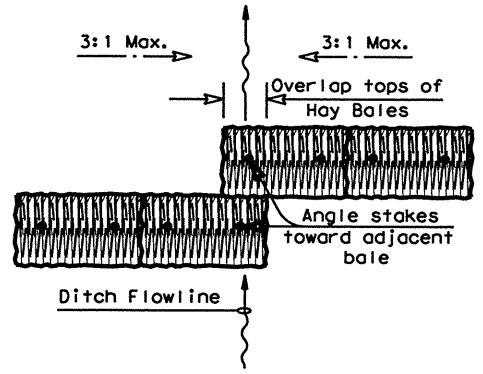

PLAN VIEW

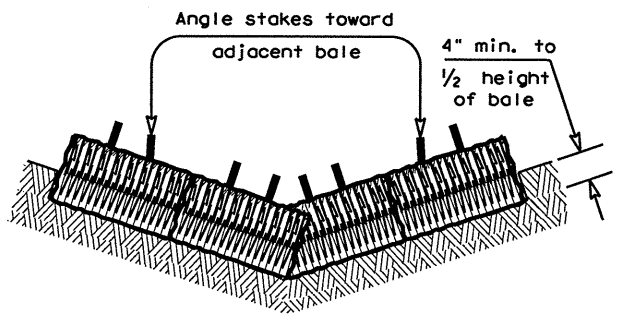

PROFILE VIEW

PLANS SHEET LEGEND

Baled Hay —— BH ——

BALED HAY USAGE GUIDELINES

A Baled Hay installation may be constructed near the downstream perimeter of a disturbed area along a contour to intercept sediment from overland runoff. A two year storm frequency may be used to calculate the flow rate to be filtered. The installation should be sized to filter a maximum flow thru rate of 5 GPM/FT^2 of cross sectional area. Baled hay may be used at the following locations:

1. Where the runoff approaching the baled hay flows over disturbed soil for less than 100'. If the slope of the disturbed soil exceeds 10%, the length of slope upstream the baled hay should be less than 50'.
2. Where the installation will be required for less than 3 months.
3. Where the contributing drainage area is less than ½ acre.

For Baled Hay installations in small ditches, the additional following considerations apply:

1. The ditch sideslopes should be graded as flat as possible to maximize the drainage flowrate thru the hay.
2. The ditch should be graded large enough to contain the overtopping drainage when sediment has filled to the top of the baled hay.

Bales should be replaced usually every 2 months or more often during wet weather when loss of structural integrity is accelerated.

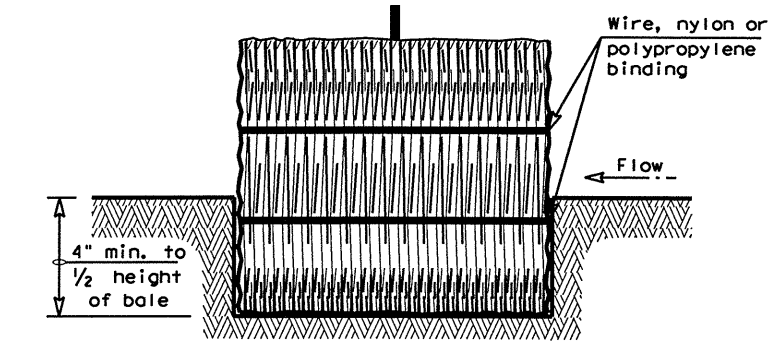

SECTION B-B

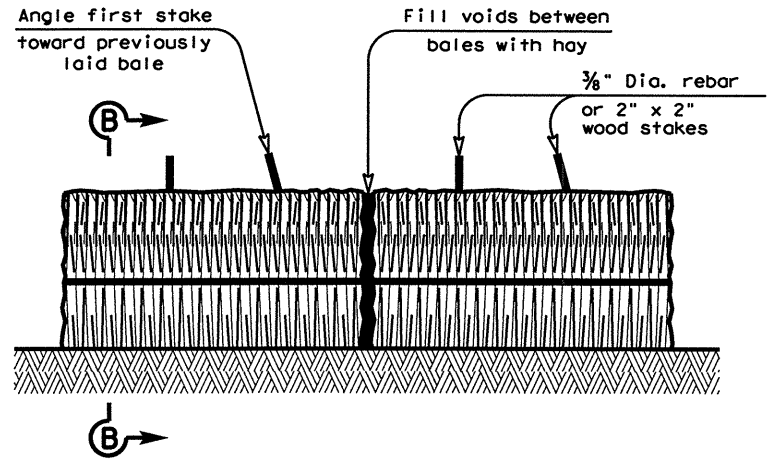

BALED HAY FOR EROSION CONTROL

BH

GENERAL NOTES

1. Hay bales shall be a minimum of 30" in length and weigh a minimum of 50 Lbs.
2. Hay bales shall be bound by either wire or nylon or polypropylene string. The bales shall be composed entirely of vegetative matter.
3. Hay bales shall be embedded in the soil a minimum of 4" and where possible ½ the height of the bale.
4. Hay bales shall be placed in a row with ends tightly abutting the adjacent bales. The bales shall be placed with bindings parallel to the ground.
5. Hay bales shall be securely anchored in place with ⅜" Dia. rebar or 2" x 2" wood stakes, driven through the bales. The first stake shall be angled towards the previously laid bale to force the bales together.
6. The guidelines shown hereon are suggestions only and may be modified by the Engineer.

Texas Department of Transportation
Design Division Standard

TEMPORARY EROSION, SEDIMENT AND WATER POLLUTION CONTROL MEASURES

FENCE & BALED HAY

EC(1)-09

FILE: ec109.dgn	DN: TxDOT	CK: AM	DW: TV	CK: BD	
© TxDOT June 1993	CONT	SECT	JOB	HIGHWAY	
REVISIONS	0027	09	099	US 90 A	
	DIST	COUNTY		SHEET NO.	
	12	HARRIS		54	

DISCLAIMER:
The use of this standard is governed by the "Texas Engineering Practice Act". No warranty of any kind is made by TxDOT for any purpose whatsoever. TxDOT assumes no responsibility for the conversion of this standard to other formats or for incorrect results or damages resulting from its use.

DATE:
FILE:

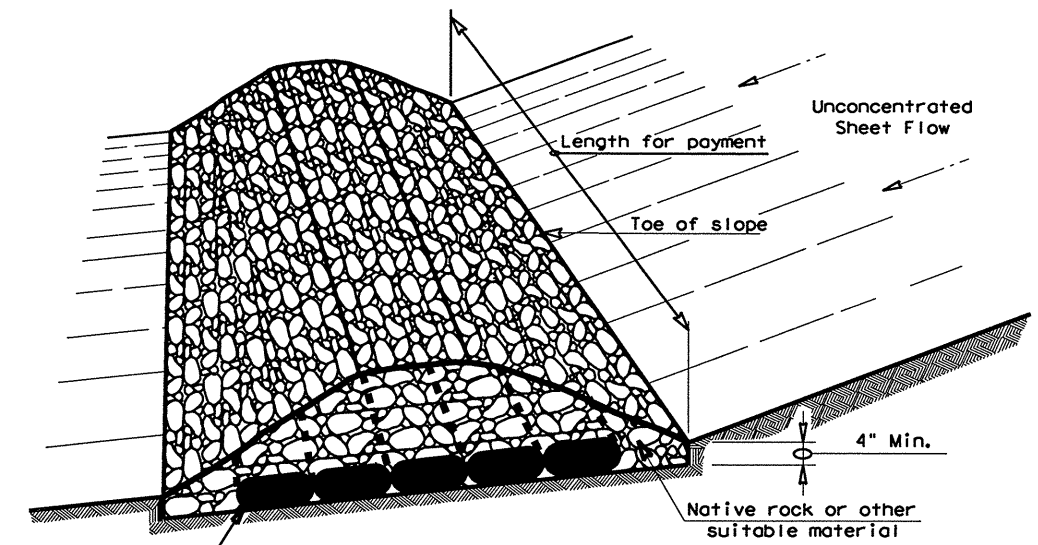

FILTER DAM AT TOE OF SLOPE

RFD1
TYPE 1

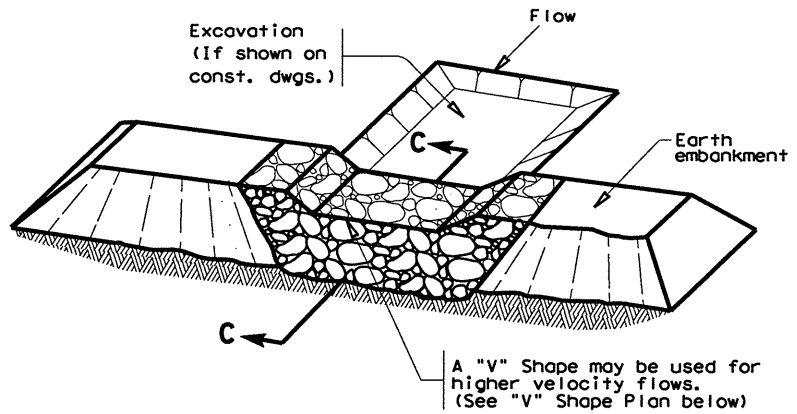

FILTER DAM AT SEDIMENT TRAP

RFD1 — OR — RFD2
TYPE 1 OR TYPE 2

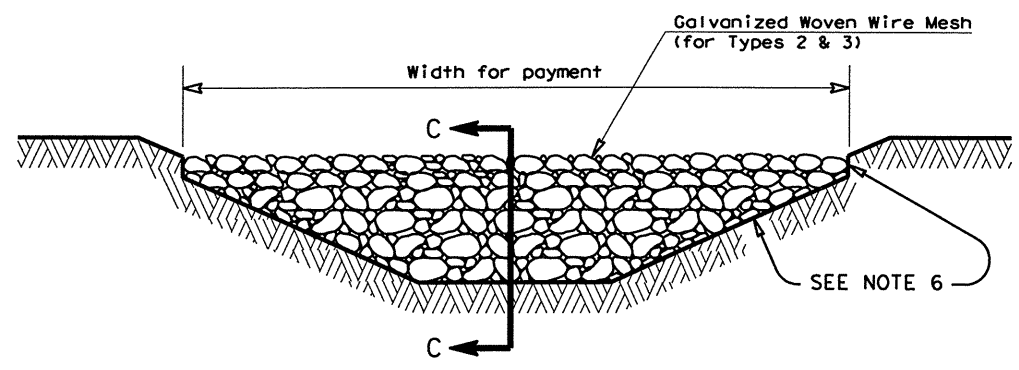

FILTER DAM AT CHANNEL SECTIONS

RFD1 — OR — RFD2 — OR — RFD3
TYPE 1 OR TYPE 2

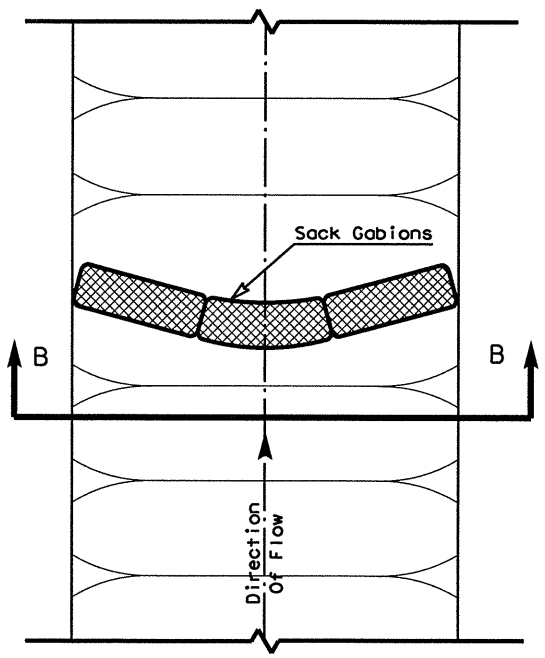

PLAN VIEW

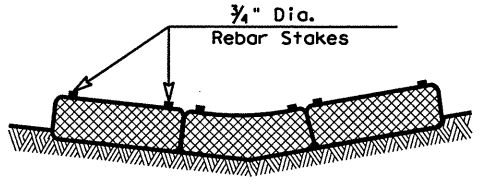

SECTION B-B

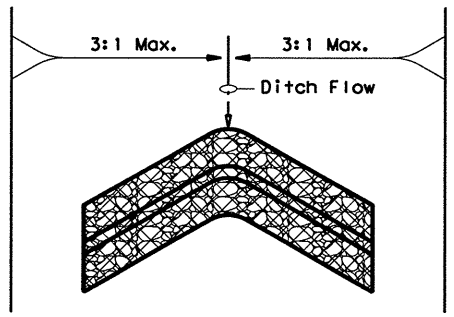

"V" SHAPE
(Plan View)

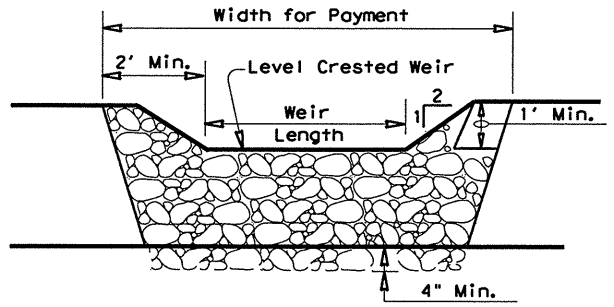

PROFILE

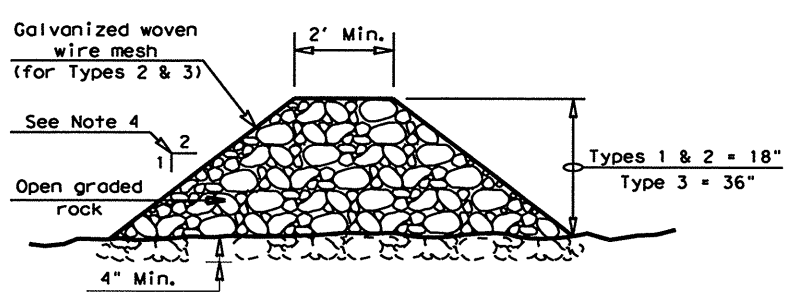

SECTION C-C

PLANS SHEET LEGEND

Type 1 Rock Filter Dam — RFD1
Type 2 Rock Filter Dam — RFD2
Type 3 Rock Filter Dam — RFD3

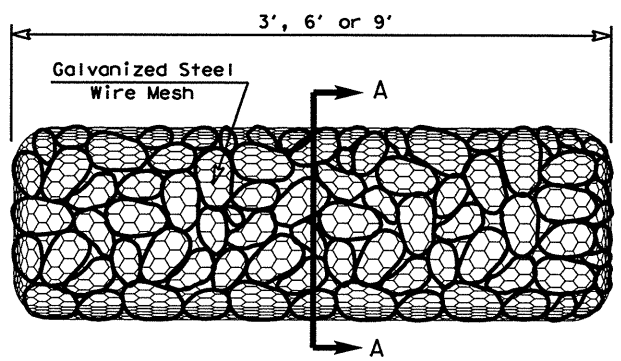

TYPE 4 (SACK GABIONS)

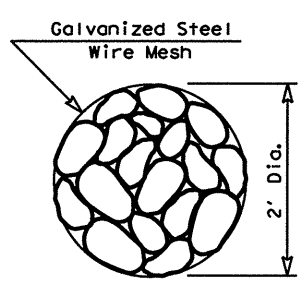

SECTION A-A

ROCK FILTER DAM USAGE GUIDELINES

Rock Filter Dams should be constructed downstream from disturbed areas to intercept sediment from overland runoff and/or concentrated flow. The dams should be sized to filter a maximum flow through rate of 60 GPM/FT^2 of cross sectional area. A 2 year storm frequency may be used to calculate the flow rate.

Type 1 (18" high with no wire mesh): Type 1 may be used at the toe of slopes, around inlets, in small ditches, and at dike or swale outlets. This type of dam is recommended to control erosion from a drainage area of 5 acres or less. Type 1 may not be used in concentrated high velocity flows (approx. 8 Ft/Sec or more) in which aggregate wash out may occur. Sandbags may be used at the embedded foundation (4" deep min.) for better filtering efficiency of low flows if called for on the plans or directed by the Engineer.

Type 2 (18" high with wire mesh): Type 2 may be used in ditches and at dike or swale outlets.

Type 3 (36" high with wire mesh): Type 3 may be used in stream flow and should be secured to the stream bed.

Type 4 (Sack gabions): Type 4 May be used in ditches and smaller channels to form an erosion control dam.

GENERAL NOTES

1. If shown on the plans or directed by the Engineer, filter dams should be placed near the toe of slopes where erosion is anticipated, upstream and/or downstream at drainage structures, and in roadway ditches and channels to collect sediment.
2. Materials (aggregate, wire mesh, sandbags, etc.) shall be as indicated by the specification for "Rock Filter Dams for Erosion and Sedimentation Control".
3. The rock filter dam dimensions shall be as indicated on the SW3P plans.
4. Side slopes should be 2:1 or flatter. Dams within the safety zone shall have sideslopes of 6:1 or flatter.
5. Maintain a minimum of 1' between top of rock filter dam weir and top of embankment for filter dams at sediment traps.
6. Filter dams should be embedded a minimum of 4" into existing ground.
7. The sediment trap for ponding of sediment laden runoff shall be of the dimensions shown on the plans.
8. Rock filter dam types 2 & 3 shall be secured with 20 gauge galvanized woven wire mesh with 1" diameter hexagonal openings. The aggregate shall be placed on the mesh to the height & slopes specified. The mesh shall be folded at the upstream side over the aggregate and tightly secured to itself on the downstream side using wire ties or hog rings. In stream use the mesh should be secured or staked to the stream bed prior to aggregate placement.
9. Sack Gabions should be staked down with ¾" dia. rebar stakes.
10. Flow outlet should be onto a stabilized area (vegetation, rock, etc.).
11. The guidelines shown hereon are suggestions only and may be modified by the Engineer.

Texas Department of Transportation
Design Division Standard

TEMPORARY EROSION, SEDIMENT AND WATER POLLUTION CONTROL MEASURES

ROCK FILTER DAMS

EC(2)-93

FILE: ec293.dgn	DN: TxDOT	CK: HEJ	DW: BD	CK:	
© TxDOT June 1993	CONT	SECT	JOB	HIGHWAY	
REVISIONS	0027	09	099	US 90 A	
	DIST	COUNTY		SHEET NO.	
	12	HARRIS		55	

DISCLAIMER:
The use of this standard is governed by the "Texas Engineering Practice Act". No warranty of any kind is made by TxDOT for any purpose whatsoever. TxDOT assumes no responsibility for the conversion of this standard to other formats or for incorrect results or damages resulting from its use.

DATE:
FILE:

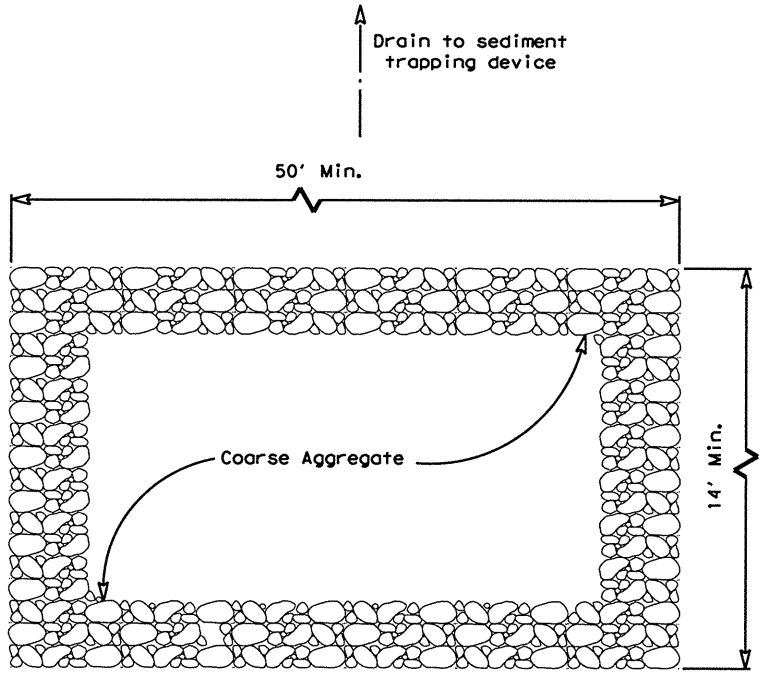

PLAN

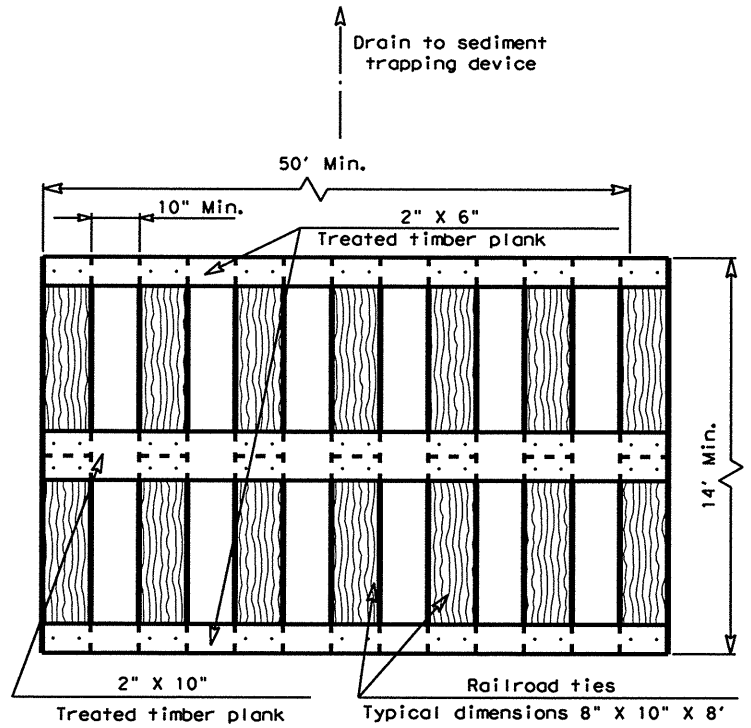

PLAN

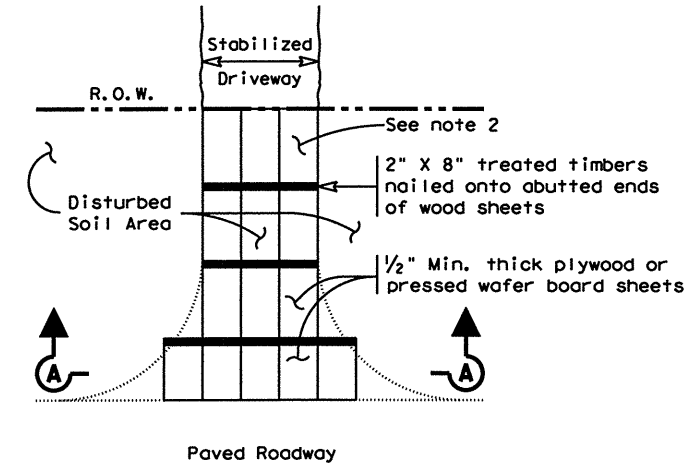

PLAN

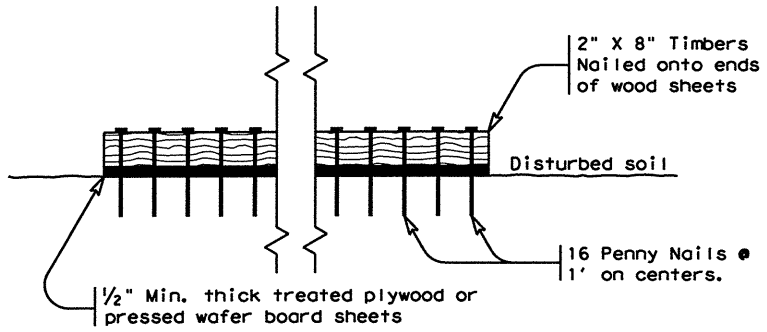

SECTION A-A

CONSTRUCTION EXIT (TYPE 3)

GENERAL NOTES

1. The length of the type 3 construction exit shall be as shown on the plans, or as directed by the Engineer.
2. The type 3 construction exit may be constructed from open graded crushed stone with a size of two to four inches spread a min. of 4" thick to the limits shown on the plans.
3. The treated timber planks shall be #2 grade min., and should be free from large and loose knots.
4. The guidelines shown hereon are suggestions only and may be modified by the Engineer.

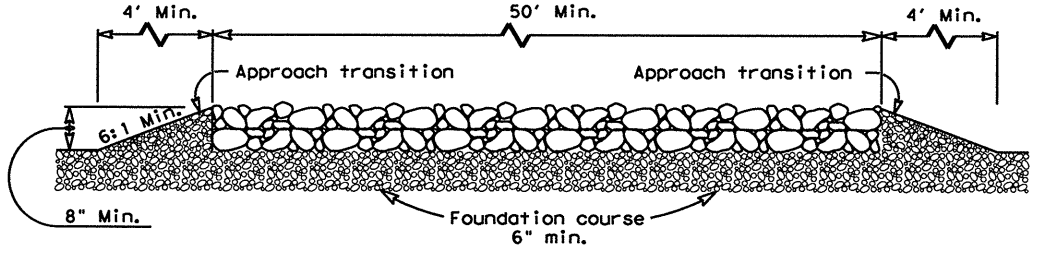

PROFILE

CONSTRUCTION EXIT (TYPE 1)

GENERAL NOTES

1. The length of the type 1 construction exit shall be as indicated on the plans, but not less than 50'.
2. The coarse aggregate should be open graded with a size of 4" to 8".
3. The approach transitions should be no steeper than 6:1 and constructed as directed by the Engineer.
4. The construction exit foundation course shall be flexible base, bituminous concrete, portland cement concrete or other material as approved by the Engineer.
5. The construction exit shall be graded to allow drainage to a sediment trapping device.
6. The guidelines shown hereon are suggestions only and may be modified by the Engineer.

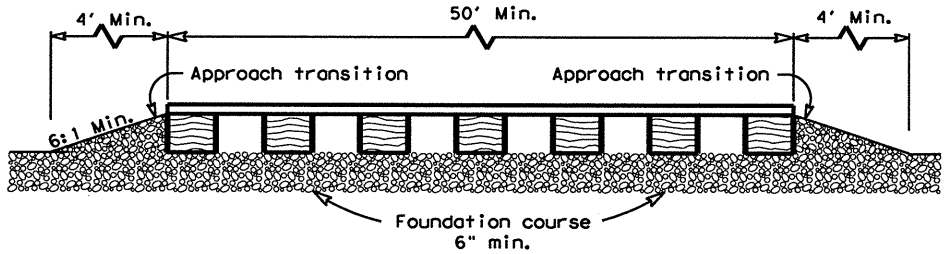

PROFILE

CONSTRUCTION EXIT (TYPE 2)

GENERAL NOTES

1. The length of the type 2 construction exit shall be as indicated on the plans, but not less than 50'.
2. The treated timber planks shall be attached to the railroad ties with ½"x 6" min. lag bolts. Other fasteners may be used as approved by the Engineer.
3. The treated timber planks shall be #2 grade min., and should be free from large and loose knots.
4. The approach transitions shall be no steeper than 6:1 and constructed as directed by the Engineer.
5. The construction exit foundation course shall be flexible base, bituminous concrete, portland cement concrete or other material as approved by the Engineer.
6. The construction exit should be graded to allow drainage to a sediment trapping device.
7. The guidelines shown hereon are suggestions only and may be modified by the Engineer.

Texas Department of Transportation
Design Division Standard

TEMPORARY EROSION, SEDIMENT AND WATER POLLUTION CONTROL MEASURES

CONSTRUCTION EXITS

EC(3)-93

FILE: ec393.dgn	DN: TxDOT	CK: HEJ	DW: BD	CK:		
©TxDOT June 1993	CONT	SECT	JOB		HIGHWAY	
REVISIONS	0027	09	099		US 90 A	
	DIST	COUNTY			SHEET NO.	
	12	HARRIS			56	

SITE DESCRIPTION

PROJECT LIMITS: FROM 0.33 MILES SOUTH OF HIRAM CLARKE TO NORTH OF HARRIS/FORT BEND COUNTY LINE

PROJECT DESCRIPTION: INSTALLATION OF MEDIAN BARRIERS. THIS PROJECT CONSISTS OF THE INSTALLATION OF MEDIAN BARRIERS, RIPRAP AND CRASH CUSHION ATTENUATORS.

MAJOR SOIL DISTURBING ACTIVITIES: EXCAVATION OF 1,766 CY OF EMBANKMENT

TOTAL PROJECT AREA: 54.91 ACRES

TOTAL AREA TO BE DISTURBED: 0.00 ACRES

WEIGHTED RUNOFF COEFFICIENT:
(AFTER CONSTRUCTION): 0.90

EXISTING CONDITION OF SOIL & VEGETATIVE COVER AND % OF EXISTING VEGETATIVE COVER: EXISTING SOIL IS SILKY SANDY WITH CLAY. 15% IS COVERED WITH BERMUDA GRASS WHICH IS IN GOOD CONDITION.

NAME OF RECEIVING WATERS: RUNOFF FROM THE PROJECT LOCATION IS CARRIED BY THE DRAINAGE SYSTEM WHICH FLOWS INTO BRAYS BAYOU (SEGMENT #1007B)

EROSION AND SEDIMENT CONTROLS

SOIL STABILIZATION PRACTICES:

- ____ TEMPORARY SEEDING
- ____ PERMANENT PLANTING, SODDING, OR SEEDING
- ____ MULCHING
- ____ SOIL RETENTION BLANKET
- ____ BUFFER ZONES
- _X_ PRESERVATION OF NATURAL RESOURCES

OTHER: ____

STRUCTURAL PRACTICES:

- _X_ SILT FENCES
- ____ HAY BALES
- ____ ROCK BERMS
- ____ DIVERSION, INTERCEPTOR, OR PERIMETER DIKES
- ____ DIVERSION, INTERCEPTOR, OR PERIMETER SWALES
- ____ DIVERSION DIKE AND SWALE COMBINATIONS
- ____ PIPE SLOPE DRAINS
- ____ PAVED FLUMES
- ____ ROCK BEDDING AT CONSTRUCTION EXIT
- ____ TIMBER MATTING AT CONSTRUCTION EXIT
- ____ CHANNEL LINERS
- _X_ SEDIMENT TRAPS
- ____ SEDIMENT BASINS
- _X_ STORM INLET SEDIMENT TRAP
- ____ STONE OUTLET STRUCTURES
- _X_ CURBS AND GUTTERS
- ____ STORM SEWERS
- ____ VELOCITY CONTROL DEVICES
- ____ EROSION CONTROL LOGS

OTHER: ____

NARRATIVE - SEQUENCE OF CONSTRUCTION (STORM WATER MANAGEMENT) ACTIVITIES:

REMOVE EXISTING CURB AND RIPRAP MEDIAN AS SHOWN
CONSTRUCT RIPRAP MEDIAN
PLACE CONCRETE TRAFFIC BARRIERS ON MEDIAN

STORM WATER MANAGEMENT: ANY DEVICES REQUIRED TO MINIMIZE SEDIMENT RUNOFF IN THE EVENT OF A STORM WILL BE PLACED IN POSITION BEFORE CONSTRUCTION BEGINS. THE STORM WATER DRAINAGE WILL BE PROVIDED BY THE EXISTING SYSTEMS ALREADY IN PLACE. WATER WITHIN THE RIGHT OF WAY WILL BE CARRIED BY DITCHES TO LOWS IN THE ROAD PROFILE WHERE IT WILL OUTFALL INTO THE RECEIVING WATERS.

POST CONSTRUCTION STORM WATER MANAGMENT

THERE WILL BE NO DEVICES INSTALLED DURING THE CONSTRUCTION PROCESS TO CONTROL STORM WATER DISCHARGES THAT WILL REMAIN AFTER CONSTRUCTION OPERATIONS HAVE BEEN COMPLETED.

OTHER EROSION AND SEDIMENT CONTROLS:

MAINTENANCE: All erosion and sediment controls will be maintained in good working order. If a repair is necessary it will be done at the earliest date possible, but no later than 7 calender days after the surrounding exposed ground has dried sufficiently to prevent further damage from heavy equipment. The area adjacent to creeks and drainageways shall have priority followed by devices protecting storm sewer inlets.

INSPECTION: All inspections will be performed by a TxDOT inspector every seven days or two weeks, as well as after every half-inch or more of rain (as recorded on a non-freezing rain gauge to be located at the Project Site). An inspection and maintenance report should be made for each inspection. Based on the inspection results, the controls shall be revised according to the inspection report.

WASTE MATERIALS: The dumpster used to store all waste material will meet all state and local city solid waste management regulations. All trash and construction debris will be deposited in the dumpster. The dumpster will be emptied as necessary or as required by local regulation and the trash will be hauled to a local dump. No construction waste material will be buried on site.

HAZARDOUS WASTE (INCLUDING SPILL REPORTING): In the event of a spill which may be considered hazardous, the Houston District Safety Office shall be contacted immediately at 713-802-5962.

SANITARY WASTE: ____

OFFSITE VEHICLE TRACKING:

- ____ HAUL ROADS DAMPENED FOR DUST CONTROL
- ____ LOADED HAUL TRUCKS TO BE COVERED WITH TARPAULIN
- _X_ EXCESS DIRT ON ROAD REMOVED DAILY
- ____ STABILIZED CONSTRUCTION ENTRANCE

OTHER: ____

REMARKS: Disposal areas, stockpiles, and haul roads shall be constructed in a manner that will minimize and control the sediment that may enter receiving waterways. Disposal areas shall not be located in any waterway, waterbody or streambed. Construction staging areas and vehicle maintenance areas shall be constructed by the Contractor in a manner which minimizes the runoff of all pollutants. All waterways shall be cleared as soon as practical of temporary embankments, temporary bridges, matting, falsework, piling, debris, and other obstructions placed during construction operations that are not part of the finished work.

STATE OF TEXAS
BARBARA D. RUSSELL
100097
LICENSED
PROFESSIONAL ENGINEER

Barbara Russell, P.E.
4.15.13

Texas Department of Transportation
Houston District

TxDOT STORM WATER POLLUTION PREVENTION PLAN

SW3P

FILE: STDG1.DGN	DN: TxDot	CK: TxDot	DW: TxDot	CK: TxDot
©TxDOT JANUARY 2007	DIST	FED REG	PROJECT NO.	SHEET
REVISIONS REV. 9/2010 MADE CHANGE TO INSPECTION NOTE.	12	6		57
	COUNTY	CONTROL	SECT	JOB	HIGHWAY
	HARRIS	0027	09	099	US90A

STD G-1

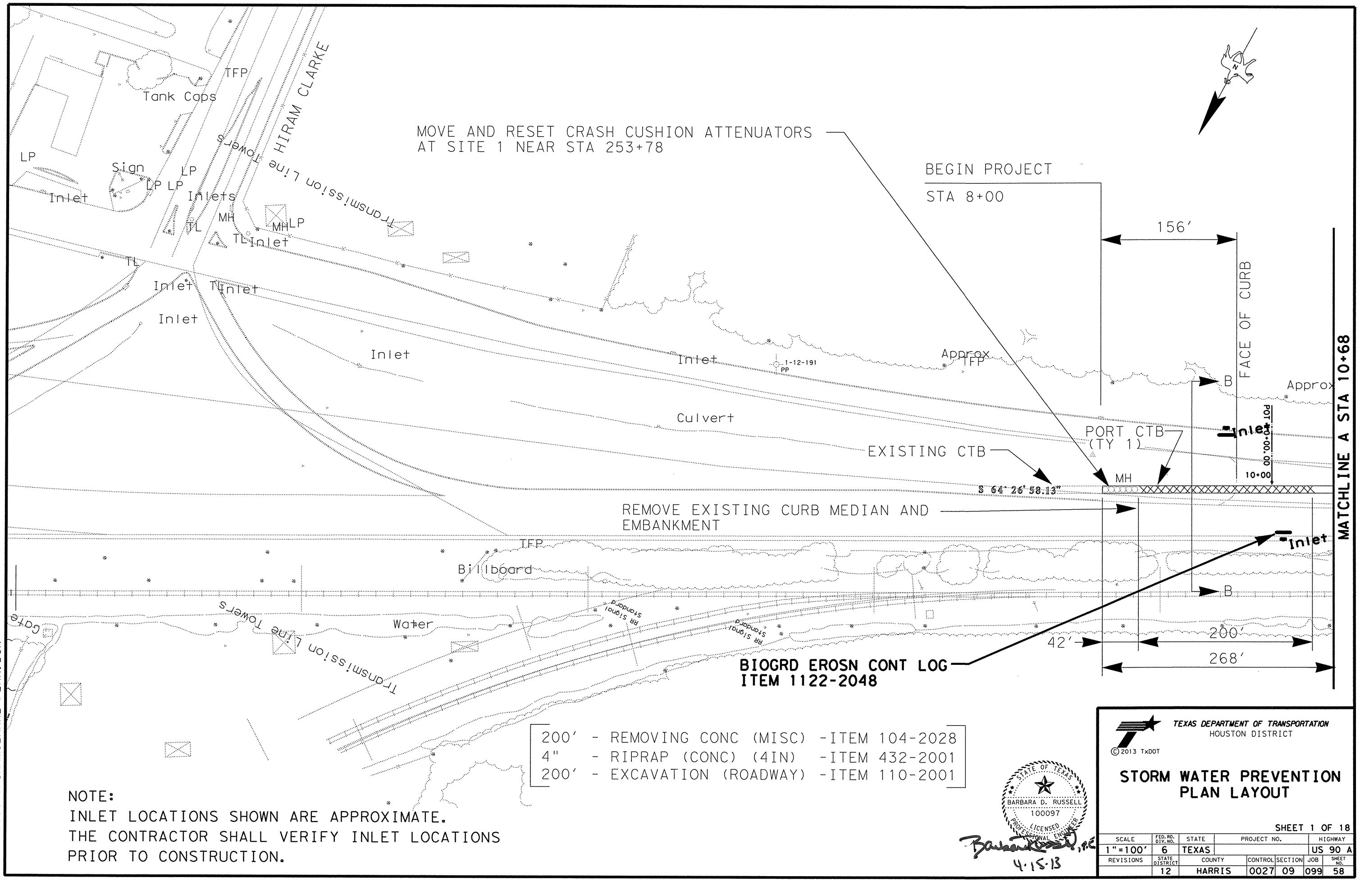

200'	- REMOVING CONC (MISC)	-ITEM 104-2028
4"	- RIPRAP (CONC) (4IN)	-ITEM 432-2001
200'	- EXCAVATION (ROADWAY)	-ITEM 110-2001

NOTE:
INLET LOCATIONS SHOWN ARE APPROXIMATE.
THE CONTRACTOR SHALL VERIFY INLET LOCATIONS
PRIOR TO CONSTRUCTION.

STATE OF TEXAS
BARBARA D. RUSSELL
100097
LICENSED
PROFESSIONAL ENGINEER

Barbara D. Russell, P.E.
4.15.13

© 2013 TxDOT

TEXAS DEPARTMENT OF TRANSPORTATION
HOUSTON DISTRICT

STORM WATER PREVENTION PLAN LAYOUT

SHEET 1 OF 18

SCALE	FED.RD. DIV.NO.	STATE	PROJECT NO.			HIGHWAY
1"=100'	6	TEXAS				US 90 A
REVISIONS	STATE DISTRICT	COUNTY	CONTROL	SECTION	JOB	SHEET NO.
	12	HARRIS	0027	09	099	58

FILE: US90A@HIRAMCLARKE*PLAN.DGN

MATCHLINE A STA 10+68

MATCHLINE B STA 25+74

1-12-190 PP

1-12-189 PP

Dense Woods

LP

LP

Paved Parking

LP

TFP

Inlet

Gate

Inlet

LP

Gate

Paved Parking

Sign

A

Gate

Culvert

Gate

MH

Culvert

TFP

Culvert

Inlet

Inlet

Inlet

Inlet

Inlet

Inlet

RR Crossing Sign

Culvert

15+00

S 64° 26' 58.13" W

20+00

PI 22+94.42

PC 25+59.25

S 64° 27' 07.88" W

25+00

Inlet

Inlet

PORT CTB (TY 1)

Billboard

A

SITE 2
(MOUNT EXIST. SPEED LIMIT SIGN TO CTB)

RELOCATED SPEED LIMIT SIGN
TO SITE 2
ITEM 644-2058

1506'

Marsh

FILE: US90A@HIRAMCLARKE*PLAN.DGN

© 2013 TxDOT

TEXAS DEPARTMENT OF TRANSPORTATION
HOUSTON DISTRICT

STORM WATER PREVENTION PLAN LAYOUT

STATE OF TEXAS
BARBARA D. RUSSELL
100097
LICENSED PROFESSIONAL ENGINEER

4-15-13

SHEET 2 OF 18

SCALE	FED.RD. DIV.NO.	STATE	PROJECT NO.			HIGHWAY
1"=100'	6	TEXAS				US 90 A
REVISIONS	STATE DISTRICT	COUNTY	CONTROL	SECTION	JOB	SHEET NO.
	12	HARRIS	0027	09	099	59

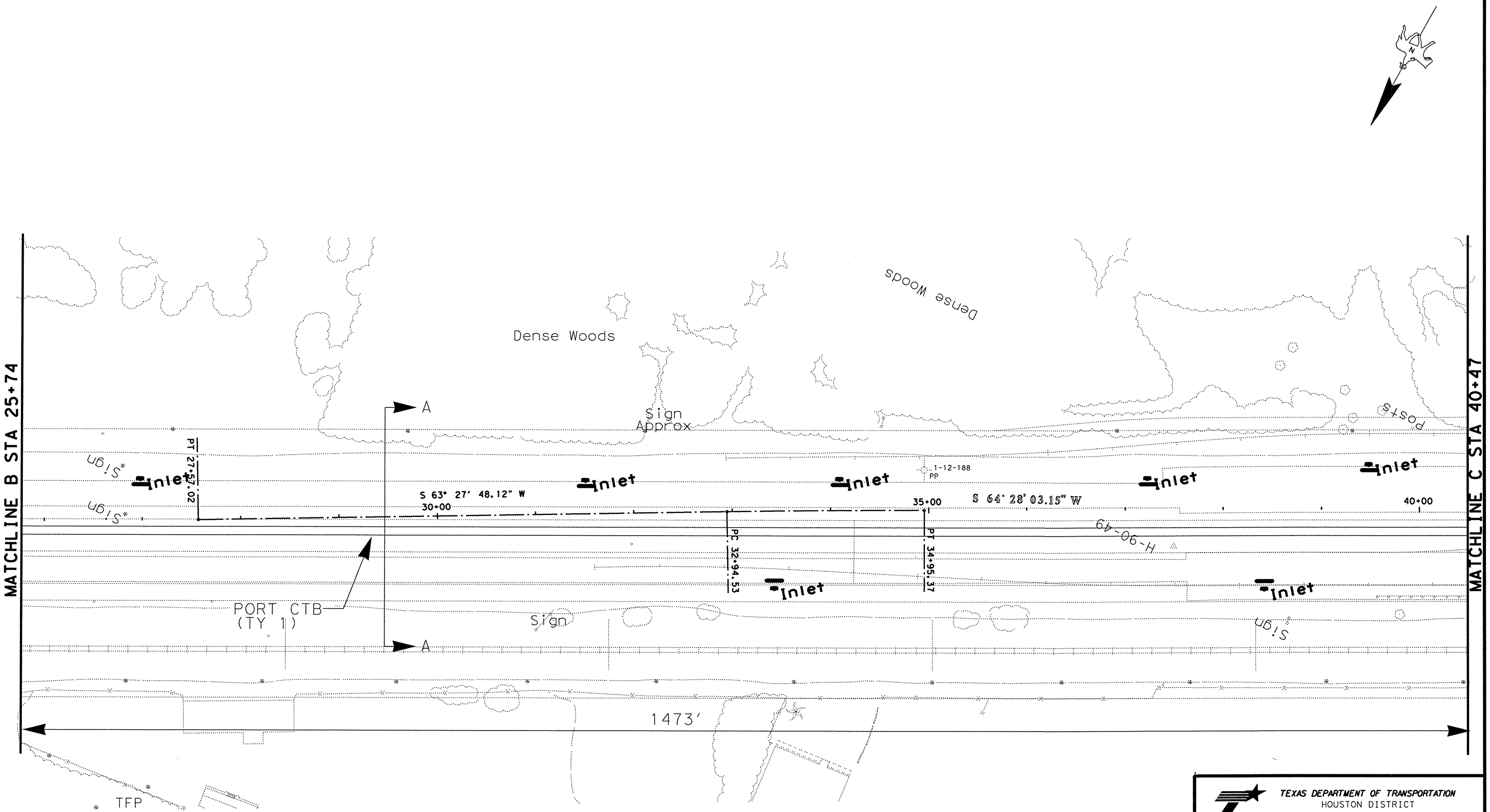

FILE: US90A@HIRAMCLARKE*PLAN.DGN

STATE OF TEXAS
BARBARA D. RUSSELL
100097
LICENSED
PROFESSIONAL ENGINEER

Barbara Russell, P.E.
4-15-13

TEXAS DEPARTMENT OF TRANSPORTATION
HOUSTON DISTRICT

© 2013 TxDOT

STORM WATER PREVENTION PLAN LAYOUT

SHEET 3 OF 18

SCALE	FED. RD. DIV. NO.	STATE	PROJECT NO.			HIGHWAY
1"=100'	6	TEXAS				US 90 A
REVISIONS	STATE DISTRICT	COUNTY	CONTROL	SECTION	JOB	SHEET NO.
	12	HARRIS	0027	09	099	60

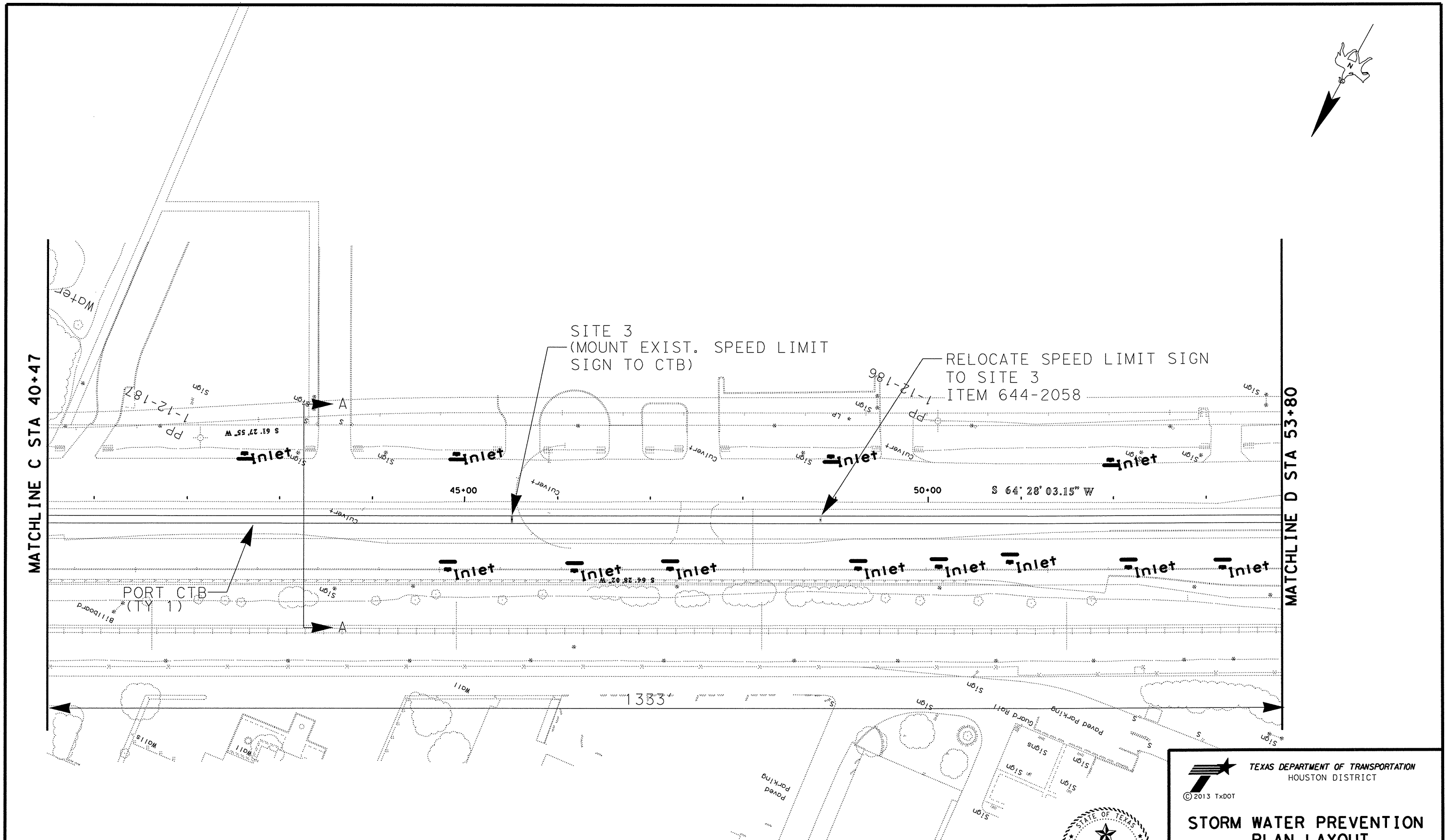

TEXAS DEPARTMENT OF TRANSPORTATION
HOUSTON DISTRICT

© 2013 TxDOT

STORM WATER PREVENTION PLAN LAYOUT

STATE OF TEXAS
BARBARA D. RUSSELL
100097
LICENSED
PROFESSIONAL ENGINEER

4.15.13

SHEET 4 OF 18

SCALE	FED. RD. DIV. NO.	STATE	PROJECT NO.			HIGHWAY
1"=100'	6	TEXAS				US 90 A
REVISIONS	STATE DISTRICT	COUNTY	CONTROL	SECTION	JOB	SHEET NO.
	12	HARRIS	0027	09	099	61

FILE: US90A@HIRAMCLARKE*PLAN.DGN

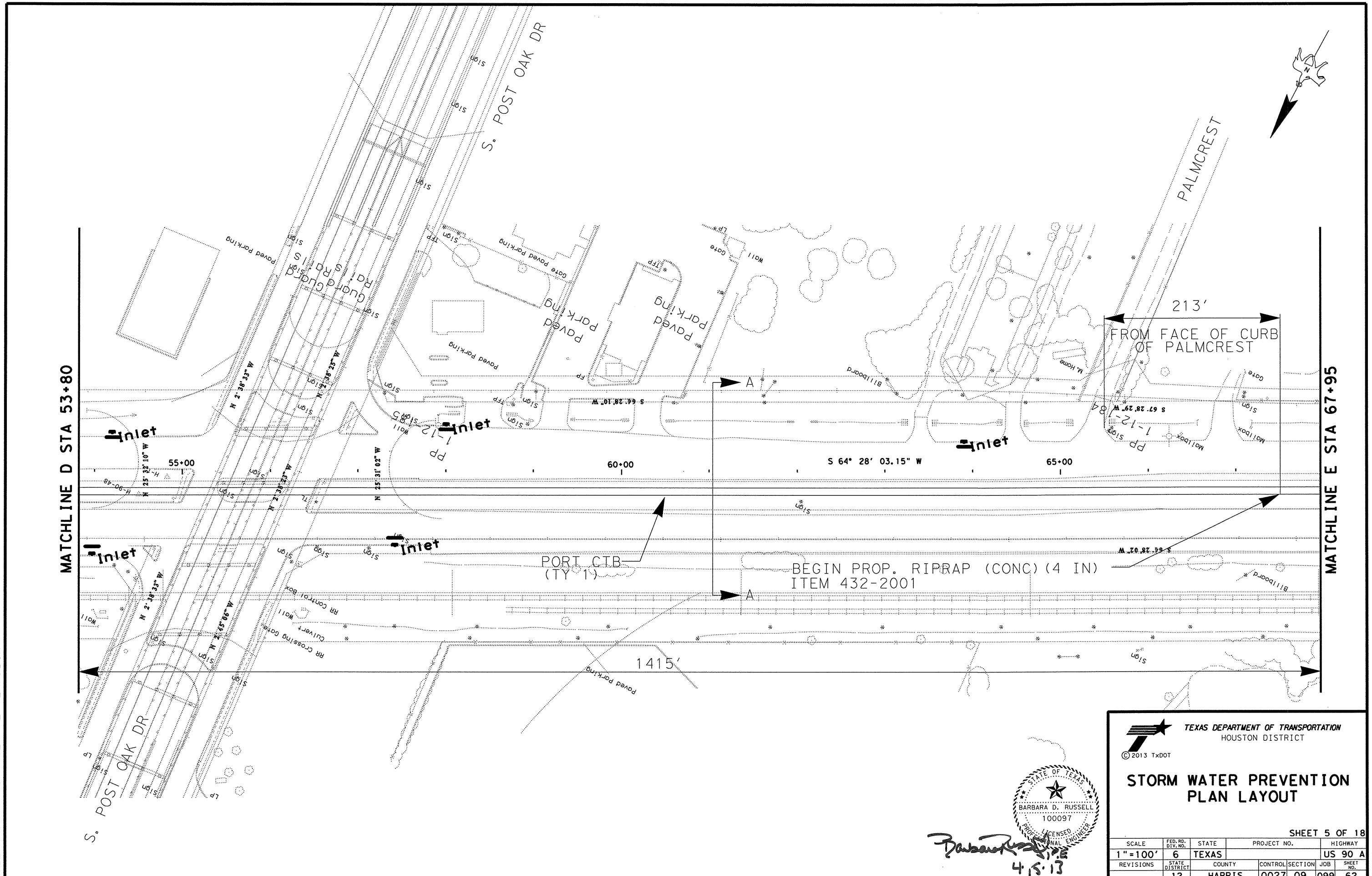

TEXAS DEPARTMENT OF TRANSPORTATION
HOUSTON DISTRICT

© 2013 TxDOT

STORM WATER PREVENTION PLAN LAYOUT

STATE OF TEXAS
BARBARA D. RUSSELL
100097
LICENSED PROFESSIONAL ENGINEER

4.15.13

SHEET 5 OF 18

SCALE	FED. RD. DIV. NO.	STATE	PROJECT NO.			HIGHWAY
1"=100'	6	TEXAS				US 90 A
REVISIONS	STATE DISTRICT	COUNTY	CONTROL	SECTION	JOB	SHEET NO.
	12	HARRIS	0027	09	099	62

FILE: US90A@HIRAMCLARKE*PLAN.DGN

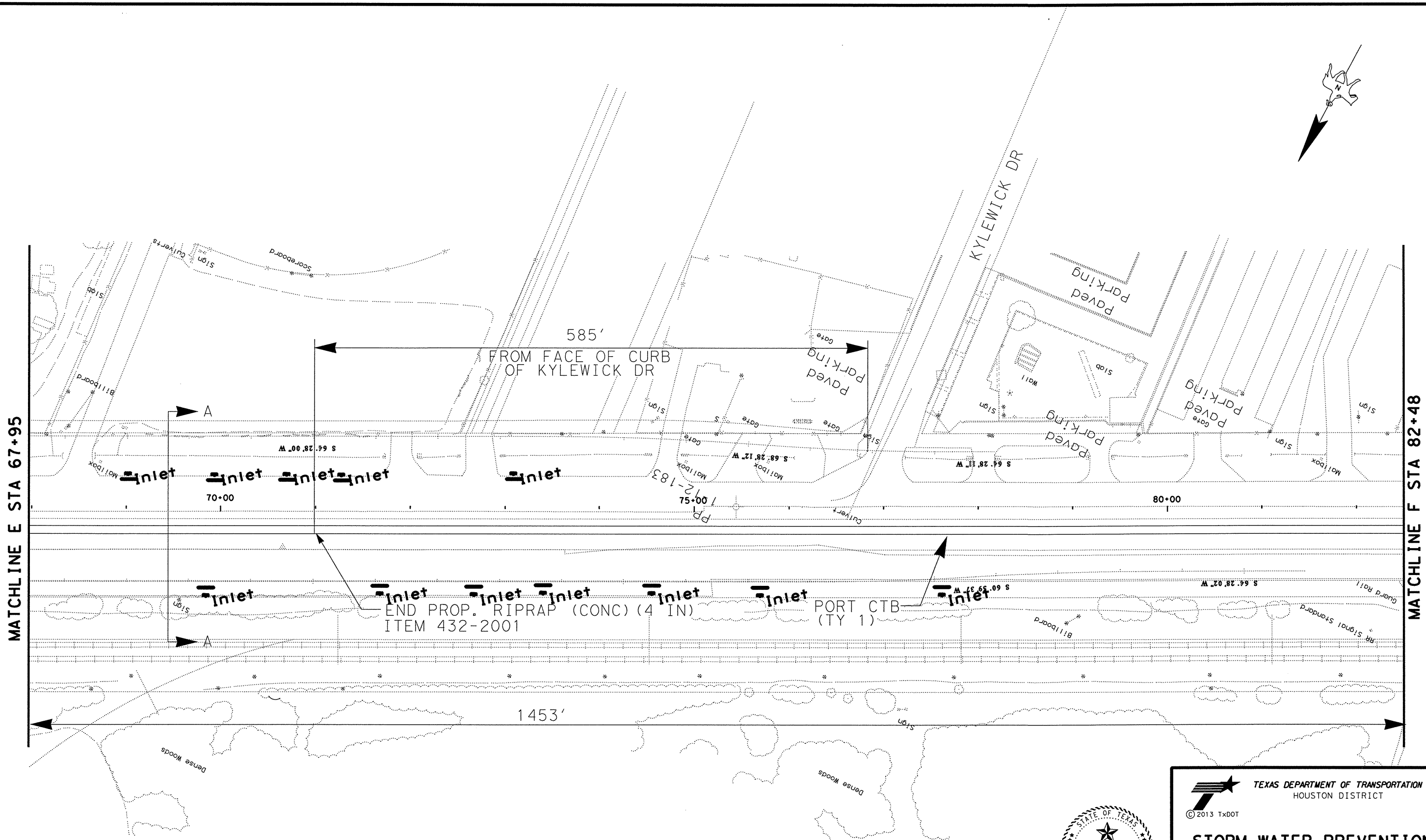

FILE: US90A@HIRAMCLARKE*PLAN.DGN

STATE OF TEXAS
BARBARA D. RUSSELL
100097
LICENSED
PROFESSIONAL ENGINEER

Barbara Russell P.E.
4-15-13

TEXAS DEPARTMENT OF TRANSPORTATION
HOUSTON DISTRICT

© 2013 TxDOT

STORM WATER PREVENTION PLAN LAYOUT

SHEET 6 OF 18

SCALE	FED. RD. DIV. NO.	STATE	PROJECT NO.			HIGHWAY	
1"=100'	6	TEXAS				US 90 A	
REVISIONS	STATE DISTRICT	COUNTY	CONTROL	SECTION	JOB	SHEET NO.	
	12	HARRIS	0027	09	099	63	

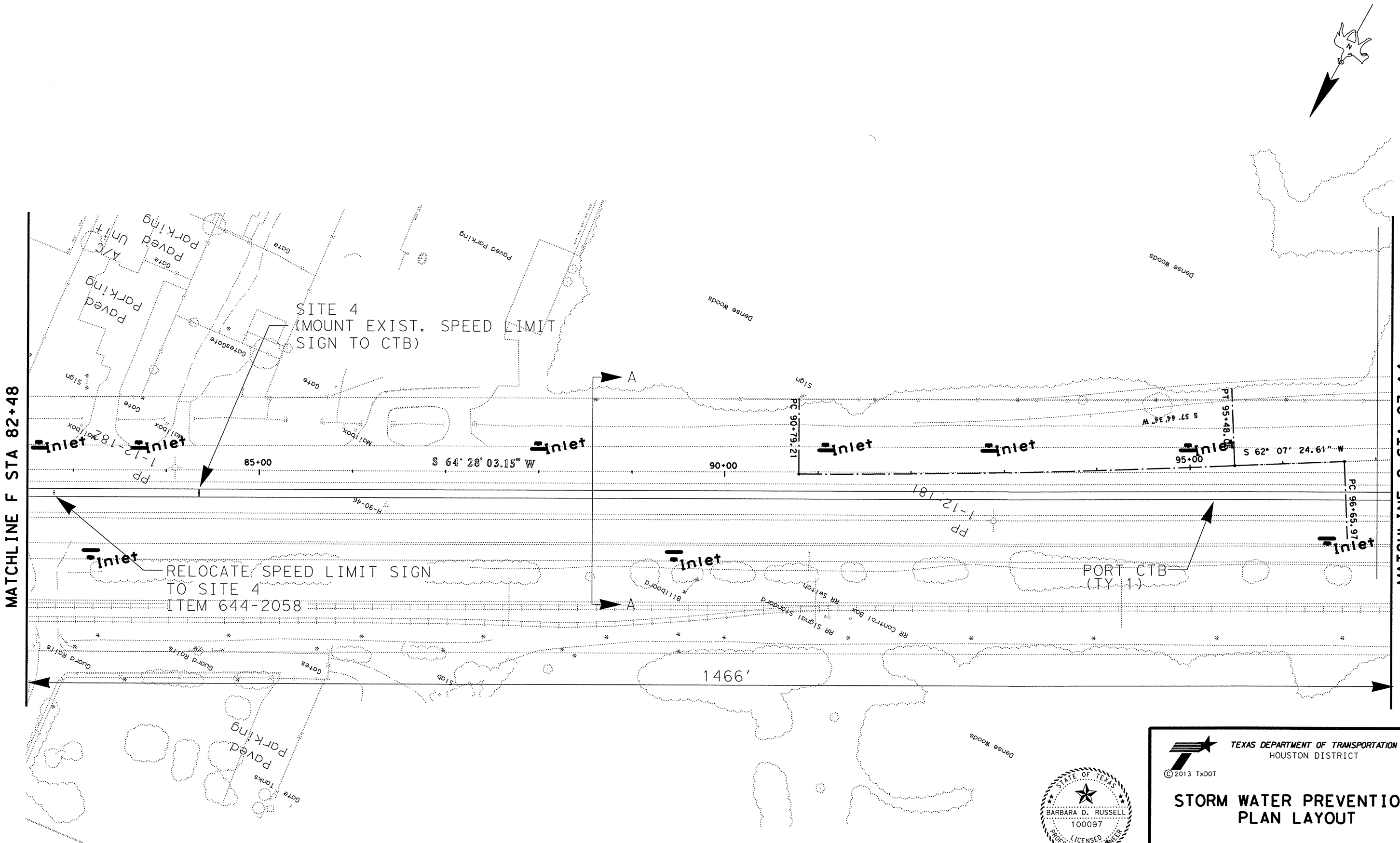

FILE: US90A@HIRAMCLARKE*PLAN.DGN

STATE OF TEXAS
BARBARA D. RUSSELL
100097
LICENSED
PROFESSIONAL ENGINEER

Barbara Russell, P.E.
4·15·13

TEXAS DEPARTMENT OF TRANSPORTATION
HOUSTON DISTRICT

© 2013 TxDOT

STORM WATER PREVENTION PLAN LAYOUT

SHEET 7 OF 18

SCALE	FED. RD. DIV. NO.	STATE	PROJECT NO.			HIGHWAY
1"=100'	6	TEXAS				US 90 A
REVISIONS	STATE DISTRICT	COUNTY	CONTROL	SECTION	JOB	SHEET NO.
	12	HARRIS	0027	09	099	64

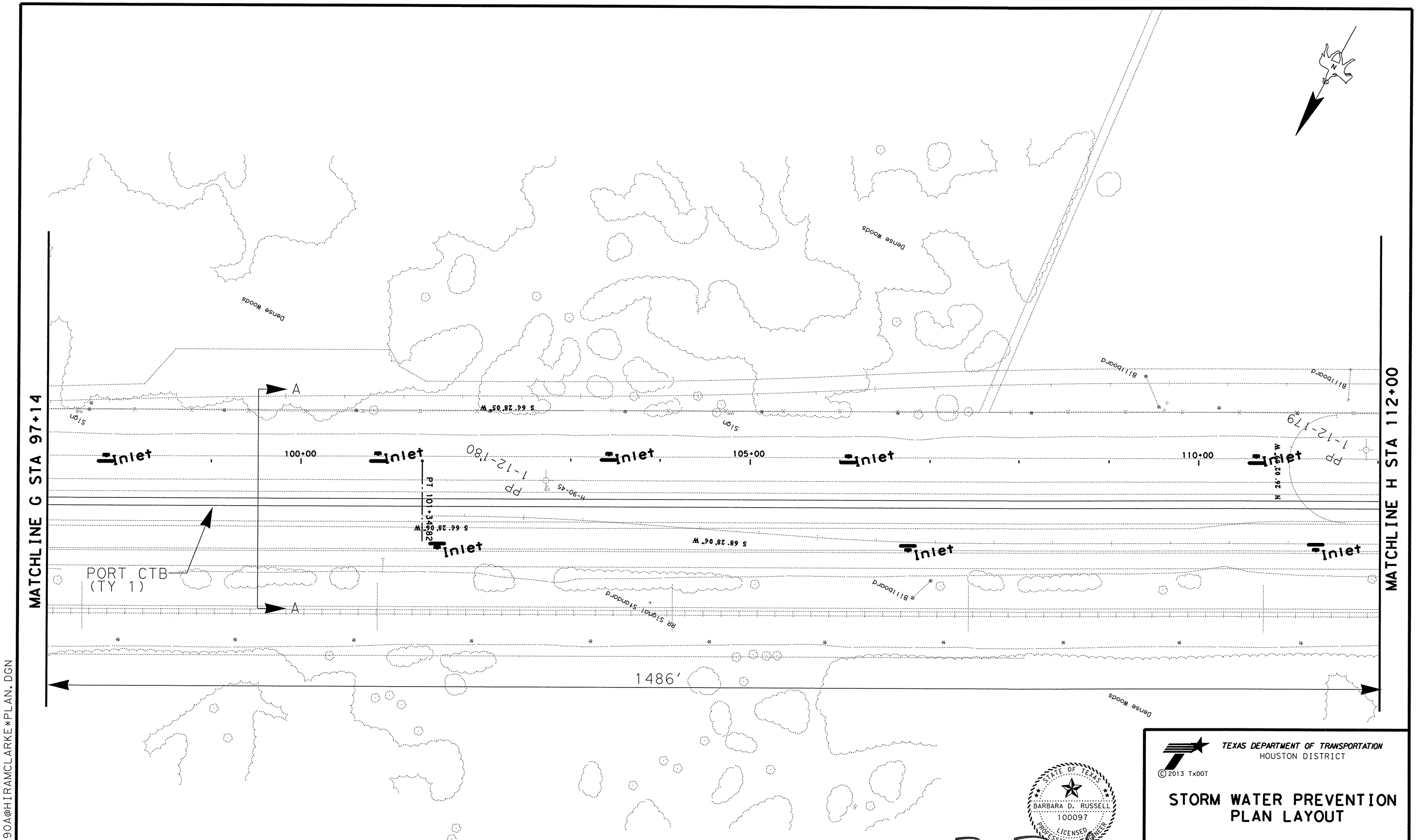

FILE: US90A@HIRAMCLARKE*PLAN.DGN

STATE OF TEXAS
BARBARA D. RUSSELL
100097
LICENSED
PROFESSIONAL ENGINEER

Barbara Russell, P.E.
4.15.13

TEXAS DEPARTMENT OF TRANSPORTATION
HOUSTON DISTRICT

© 2013 TxDOT

STORM WATER PREVENTION PLAN LAYOUT

SHEET 8 OF 18

SCALE	FED. RD. DIV. NO.	STATE	PROJECT NO.			HIGHWAY
1"=100'	6	TEXAS				US 90 A
REVISIONS	STATE DISTRICT	COUNTY	CONTROL	SECTION	JOB	SHEET NO.
	12	HARRIS	0027	09	099	65

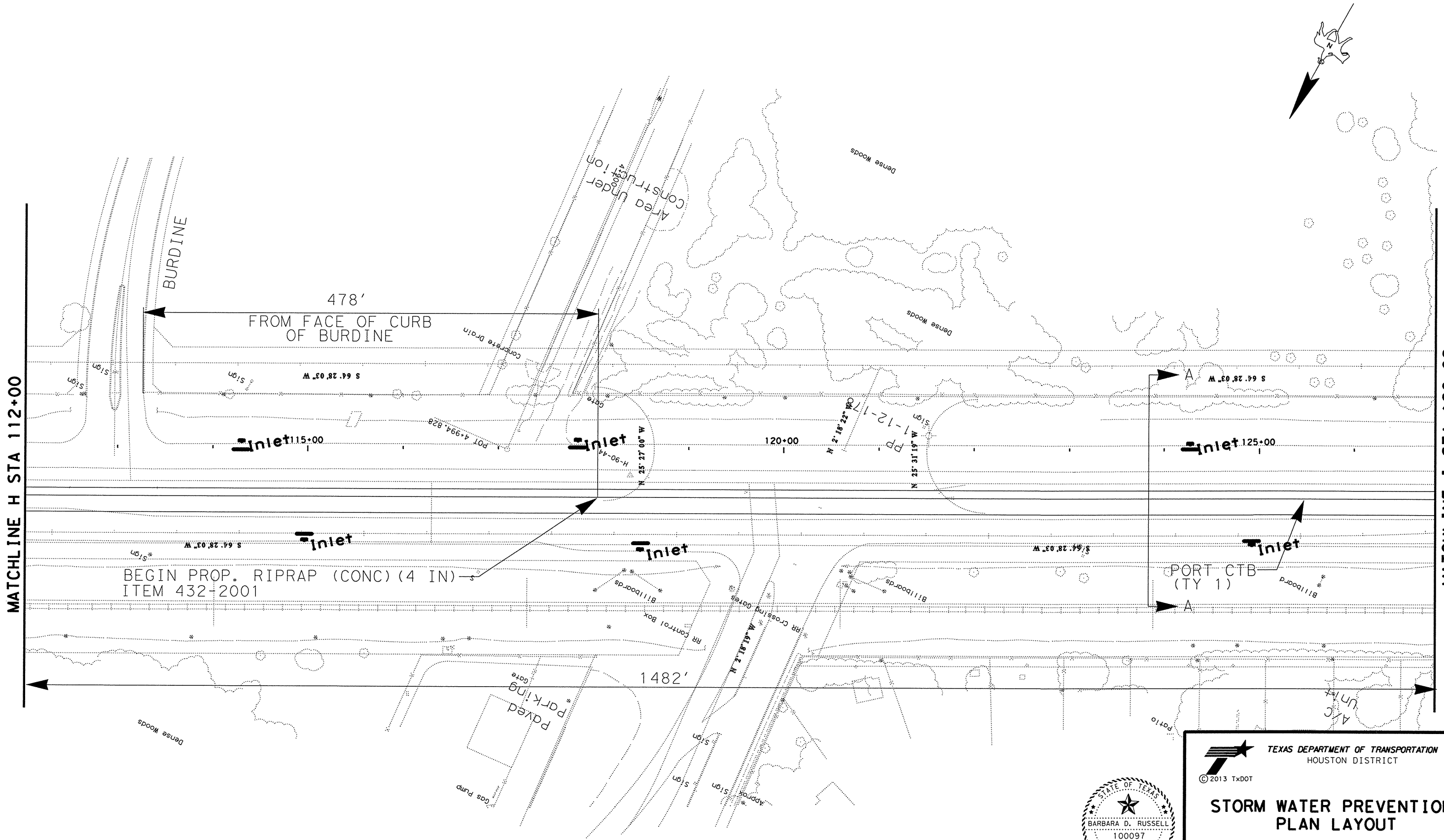

FILE: US90A@HIRAMCLARKE*PLAN.DGN

TEXAS DEPARTMENT OF TRANSPORTATION
HOUSTON DISTRICT

© 2013 TxDOT

STATE OF TEXAS
BARBARA D. RUSSELL
100097
LICENSED
PROFESSIONAL ENGINEER

4-15-13

STORM WATER PREVENTION PLAN LAYOUT

SHEET 9 OF 18

SCALE	FED. RD. DIV. NO.	STATE	PROJECT NO.			HIGHWAY
1"=100'	6	TEXAS				US 90 A
REVISIONS	STATE DISTRICT	COUNTY	CONTROL	SECTION	JOB	SHEET NO.
	12	HARRIS	0027	09	099	66

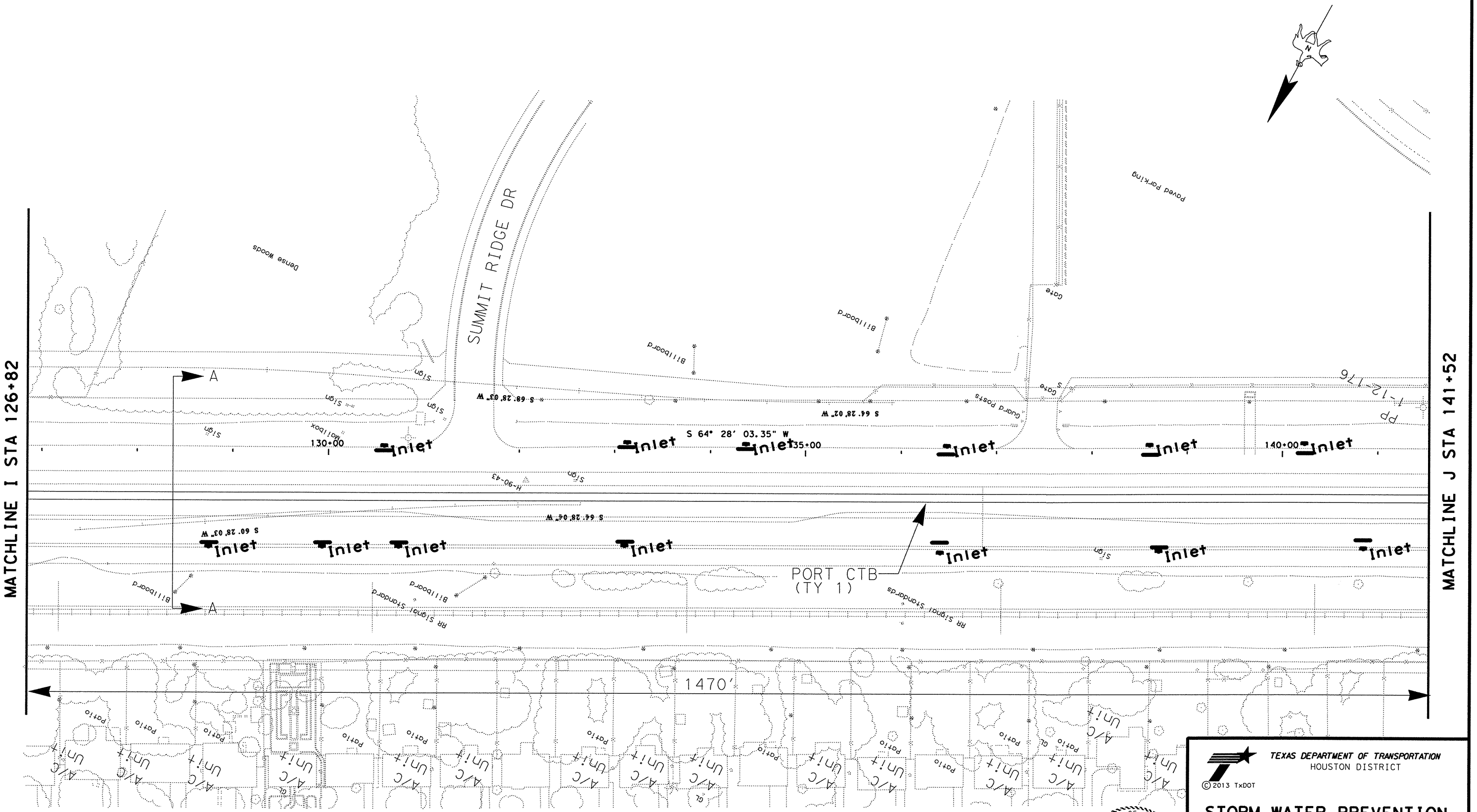

FILE: US90A@HIRAMCLARKE*PLAN.DGN

TEXAS DEPARTMENT OF TRANSPORTATION
HOUSTON DISTRICT

© 2013 TxDOT

STORM WATER PREVENTION PLAN LAYOUT

STATE OF TEXAS
BARBARA D. RUSSELL
100097
LICENSED
PROFESSIONAL ENGINEER

4.15.13

SHEET 10 OF 18

SCALE	FED. RD. DIV. NO.	STATE	PROJECT NO.			HIGHWAY
1"=100'	6	TEXAS				US 90 A
REVISIONS	STATE DISTRICT	COUNTY	CONTROL	SECTION	JOB	SHEET NO.
	12	HARRIS	0027	09	099	67

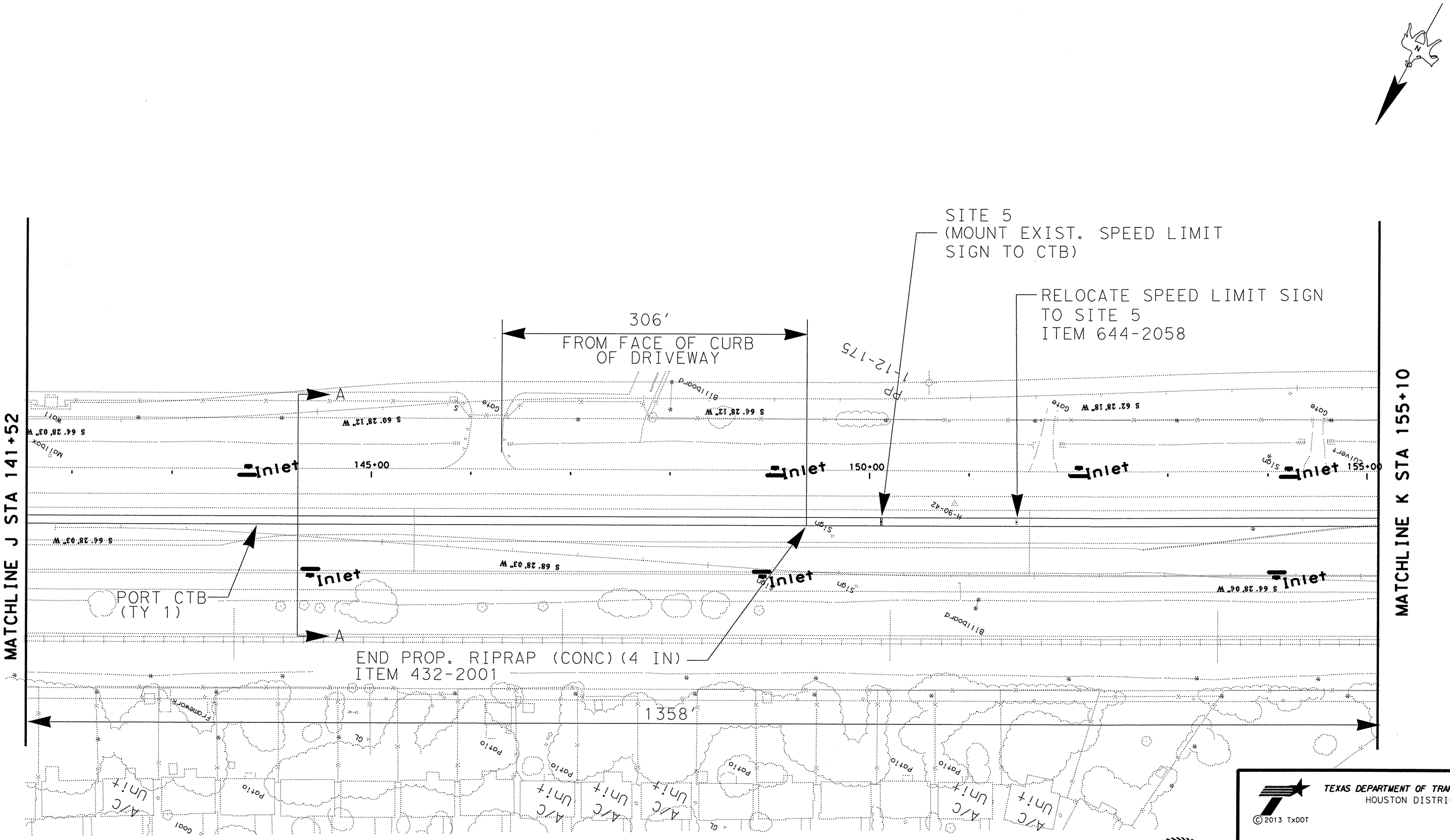

FILE: US90A@HIRAMCLARKE*PLAN.DGN

TEXAS DEPARTMENT OF TRANSPORTATION
HOUSTON DISTRICT

© 2013 TxDOT

STORM WATER PREVENTION PLAN LAYOUT

SHEET 11 OF 18

SCALE	FED. RD. DIV. NO.	STATE	PROJECT NO.			HIGHWAY
1"=100'	6	TEXAS				US 90 A
REVISIONS	STATE DISTRICT	COUNTY	CONTROL	SECTION	JOB	SHEET NO.
	12	HARRIS	0027	09	099	68

STATE OF TEXAS
BARBARA D. RUSSELL
100097
LICENSED
PROFESSIONAL ENGINEER

4.15.13

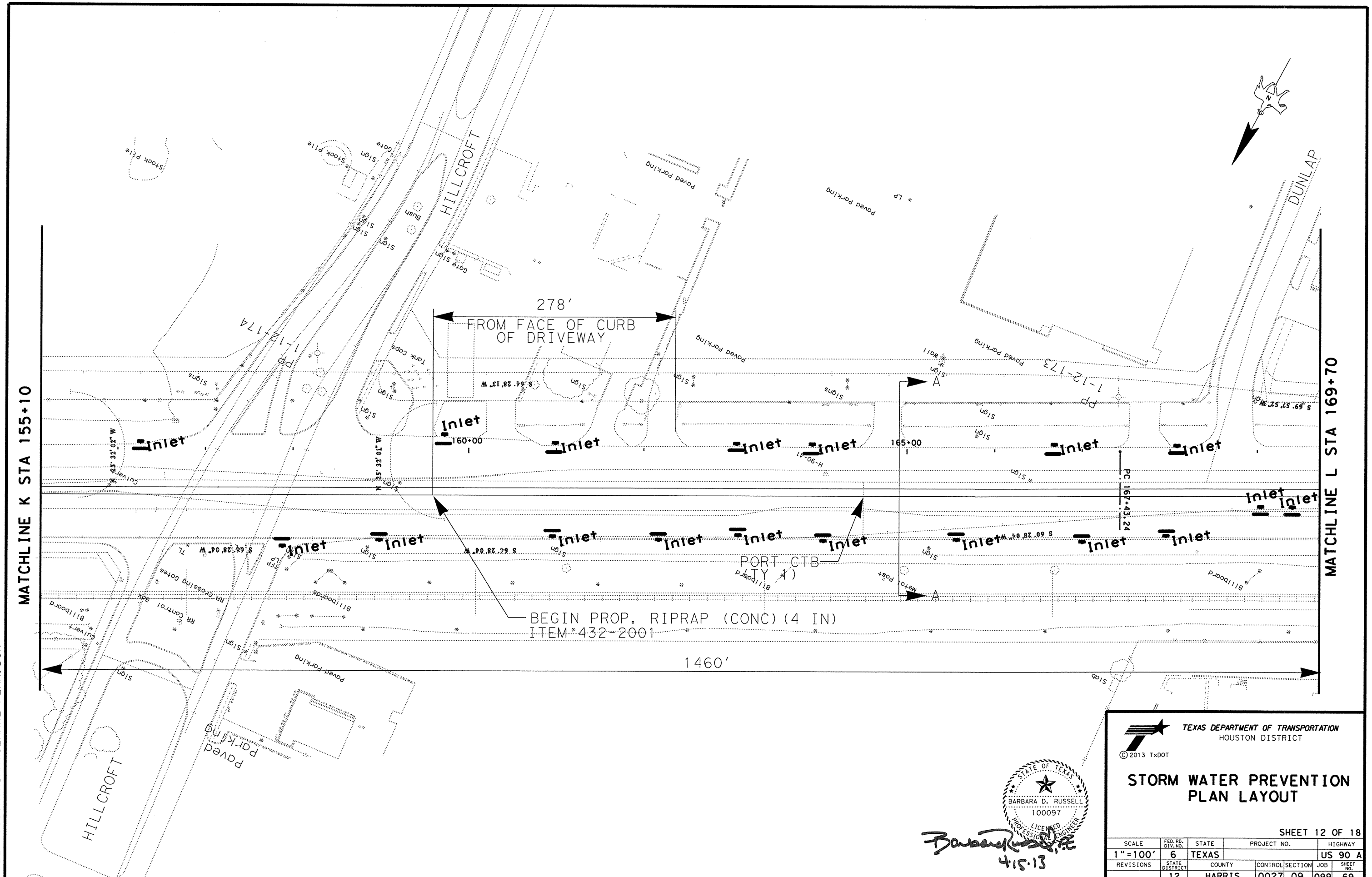

FILE: US90A@HIRAMCLARKE*PLAN.DGN

TEXAS DEPARTMENT OF TRANSPORTATION
HOUSTON DISTRICT

© 2013 TxDOT

STATE OF TEXAS
BARBARA D. RUSSELL
100097
LICENSED
PROFESSIONAL ENGINEER

Barbara Russell, P.E.
4.15.13

STORM WATER PREVENTION PLAN LAYOUT

SHEET 12 OF 18

SCALE	FED. RD. DIV. NO.	STATE	PROJECT NO.			HIGHWAY
1"=100'	6	TEXAS				US 90 A
REVISIONS	STATE DISTRICT	COUNTY	CONTROL	SECTION	JOB	SHEET NO.
	12	HARRIS	0027	09	099	69

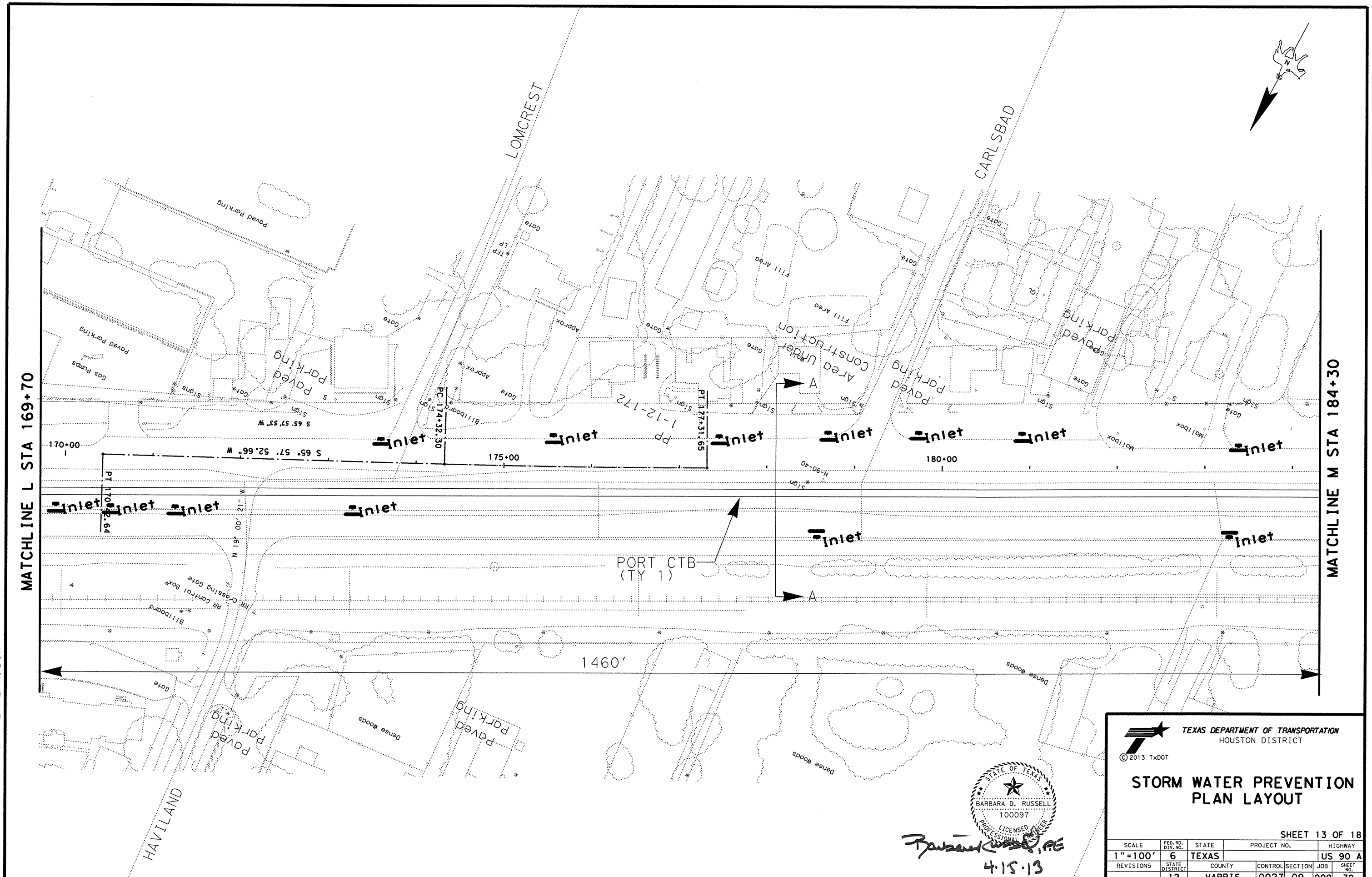

TEXAS DEPARTMENT OF TRANSPORTATION
HOUSTON DISTRICT

© 2013 TxDOT

STORM WATER PREVENTION PLAN LAYOUT

SHEET 13 OF 18

SCALE	FED. RD. DIV. NO.	STATE	PROJECT NO.			HIGHWAY
1"=100'	6	TEXAS				US 90 A
REVISIONS	STATE DISTRICT	COUNTY	CONTROL	SECTION	JOB	SHEET NO.
	12	HARRIS	0027	09	099	70

STATE OF TEXAS
BARBARA D. RUSSELL
100097
LICENSED
PROFESSIONAL ENGINEER

Barbara Russell, P.E.
4.15.13

FILE: US90A@HIRAMCLARKE*PLAN.DGN

MATCHLINE M STA 184+30

MATCHLINE N STA 199+08

ZAVALLA

HODGES

Paved Parking

Paved Parking

Paved Parking

Paved Parking

Paved Parking

Paved Parking

Dense Woods

Dense Woods

Dense Woods

Dense Woods

Unit

A/C

Culvert

Culvert

Culvert

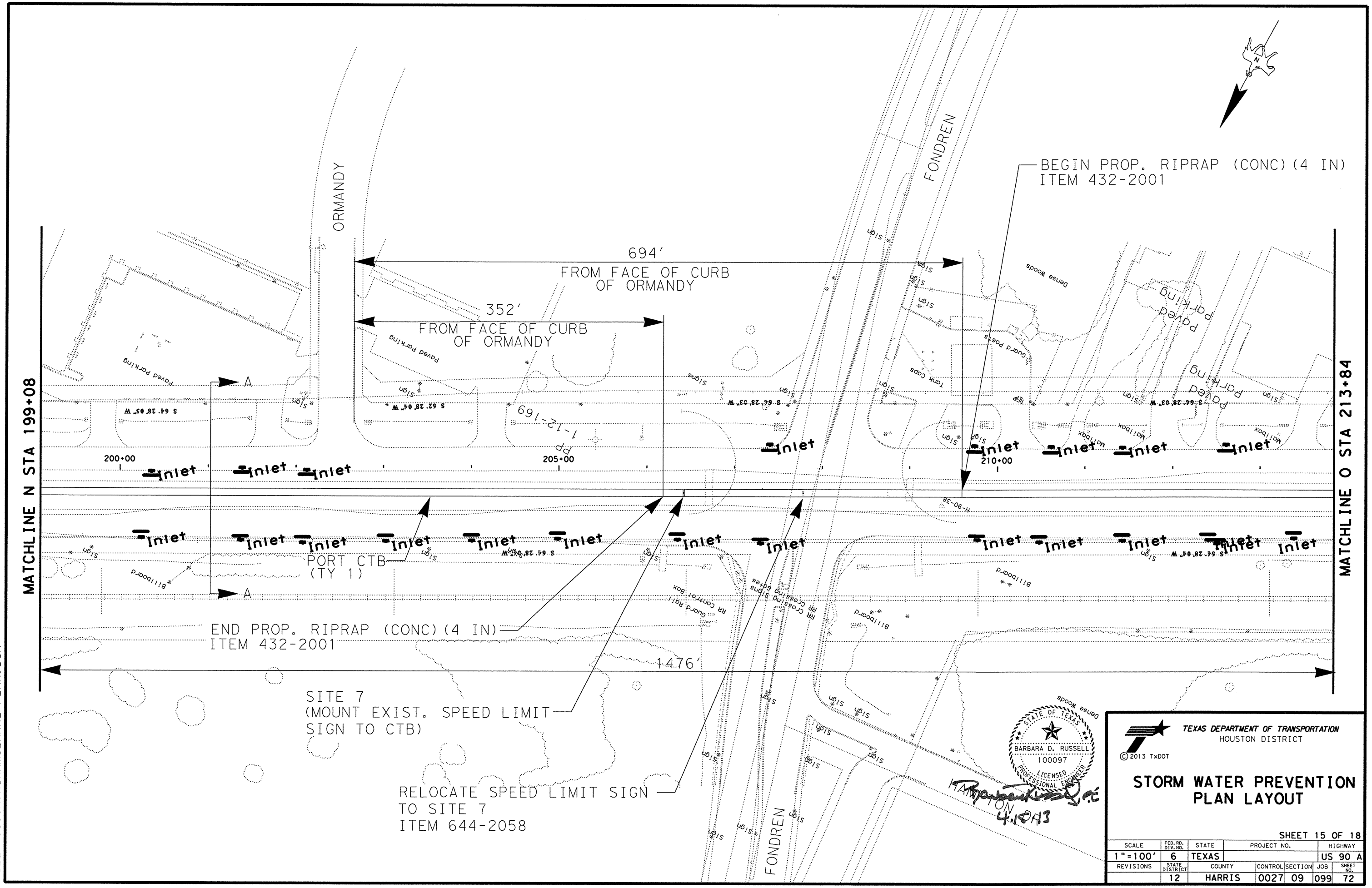

STATE OF TEXAS
BARBARA D. RUSSELL
100097
LICENSED
PROFESSIONAL ENGINEER

HAMPTON, P.E.
4.18.13

TEXAS DEPARTMENT OF TRANSPORTATION
HOUSTON DISTRICT

© 2013 TxDOT

STORM WATER PREVENTION PLAN LAYOUT

SHEET 15 OF 18

SCALE	FED. RD. DIV. NO.	STATE	PROJECT NO.			HIGHWAY
1"=100'	6	TEXAS				US 90 A
REVISIONS	STATE DISTRICT	COUNTY	CONTROL	SECTION	JOB	SHEET NO.
	12	HARRIS	0027	09	099	72

FILE: US90A@HIRAMCLARKE*PLAN.DGN

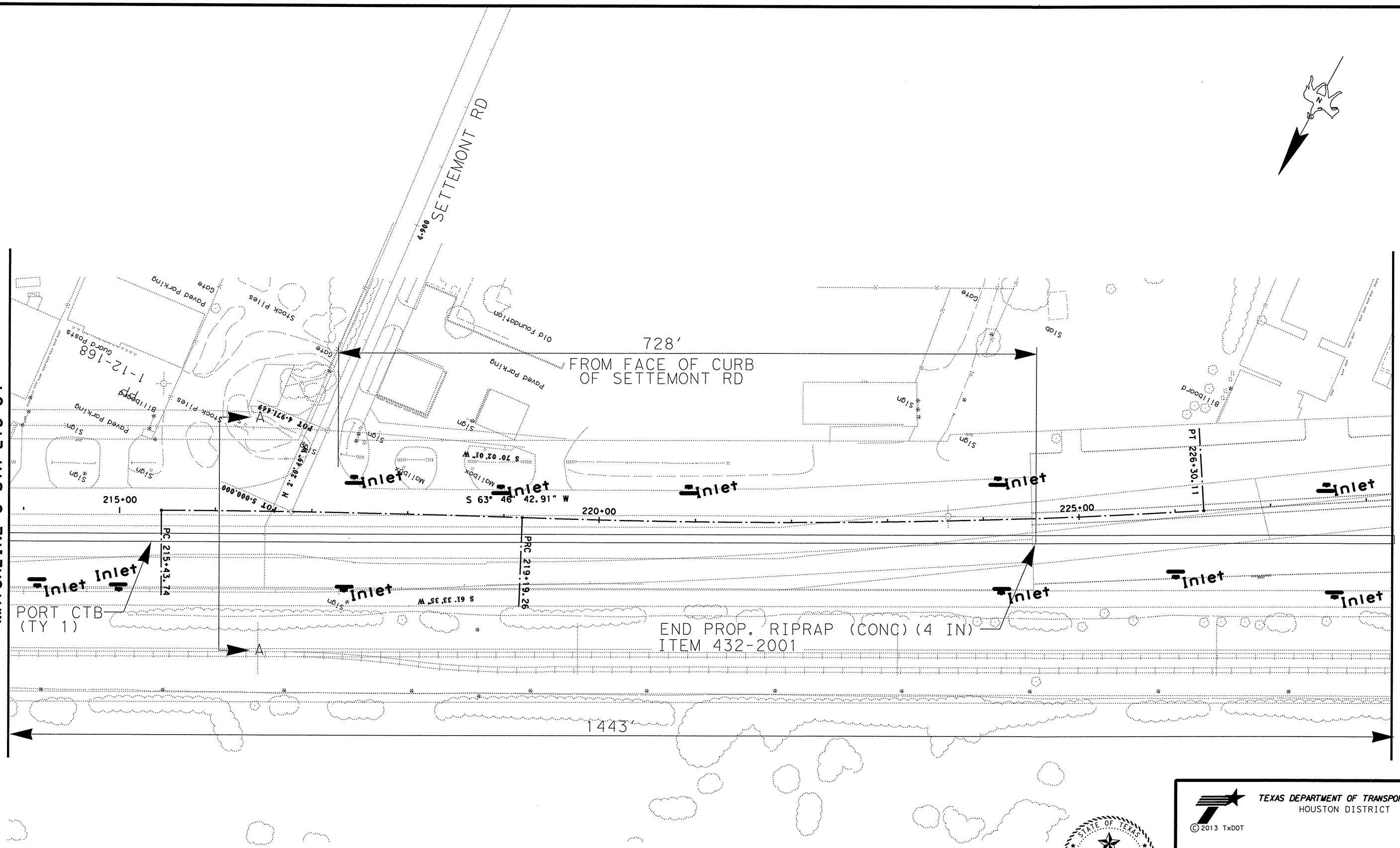

FILE: US90A@HIRAMCLARKE*PLAN.DGN

STATE OF TEXAS
BARBARA D. RUSSELL
100097
LICENSED PROFESSIONAL ENGINEER

Barbara Russell, P.E.
4-15-13

© 2013 TxDOT

TEXAS DEPARTMENT OF TRANSPORTATION
HOUSTON DISTRICT

STORM WATER PREVENTION PLAN LAYOUT

SHEET 16 OF 18

SCALE	FED. RD. DIV. NO.	STATE	PROJECT NO.			HIGHWAY
1"=100'	6	TEXAS				US 90 A
REVISIONS	STATE DISTRICT	COUNTY	CONTROL	SECTION	JOB	SHEET NO.
	12	HARRIS	0027	09	099	73

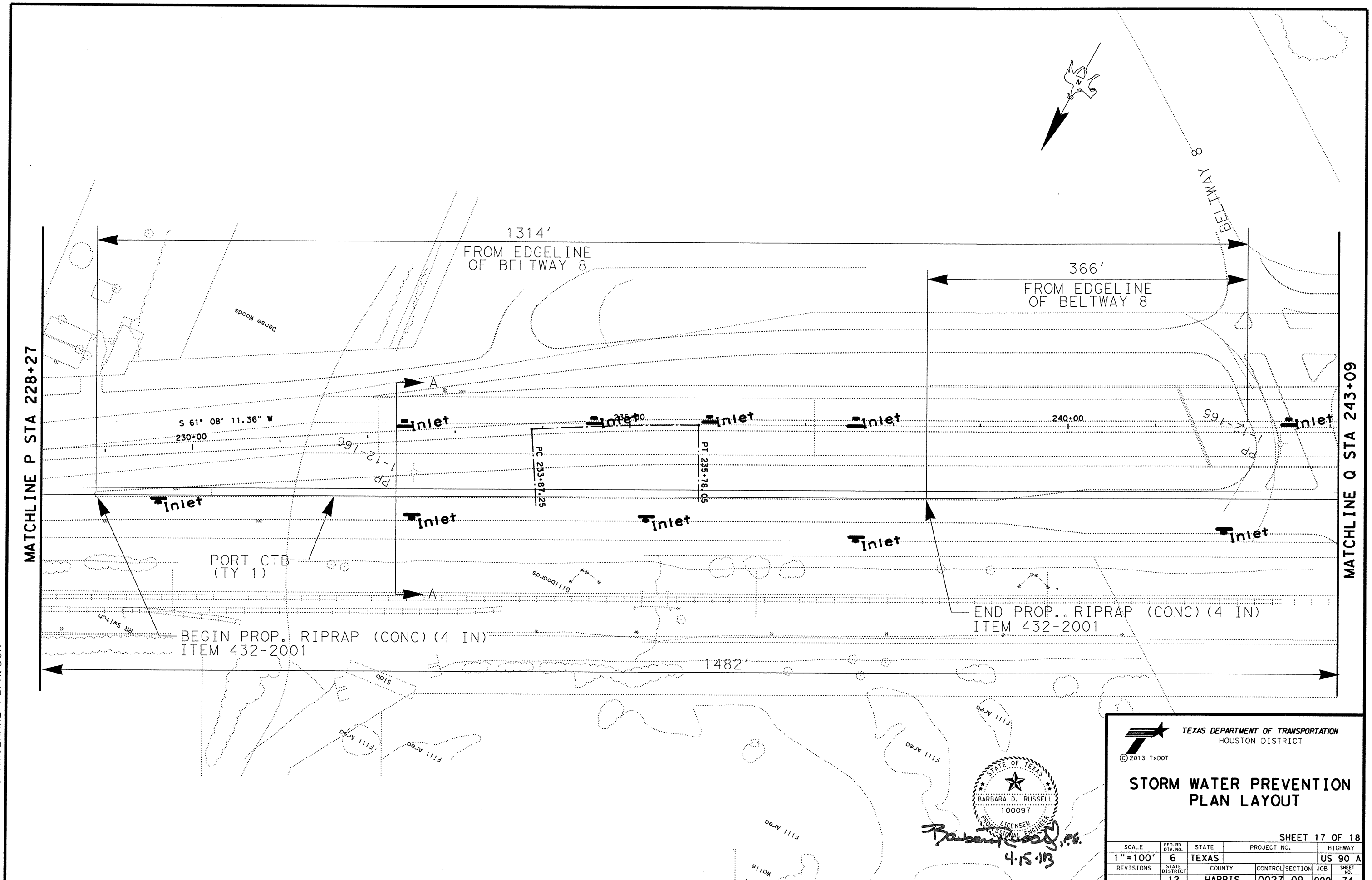

TEXAS DEPARTMENT OF TRANSPORTATION
HOUSTON DISTRICT

© 2013 TxDOT

STATE OF TEXAS
BARBARA D. RUSSELL
100097
LICENSED
PROFESSIONAL ENGINEER

Barbara Russell, P.E.
4-15-13

STORM WATER PREVENTION PLAN LAYOUT

SHEET 17 OF 18

SCALE	FED. RD. DIV. NO.	STATE	PROJECT NO.			HIGHWAY
1"=100'	6	TEXAS				US 90 A
REVISIONS	STATE DISTRICT	COUNTY	CONTROL	SECTION	JOB	SHEET NO.
	12	HARRIS	0027	09	099	74

FILE: US90A@HIRAMCLARKE*PLAN.DGN

583'
FROM EDGELINE
OF BELTWAY 8

245'
FROM EDGELINE
OF BELTWAY 8

END PROJECT
STA 253+78

BELTWAY 8

Top of underground pipeline

MATCHLINE Q STA 243+09

245+00

250+00

255+00

Inlet

Inlet

Inlet

Inlet

Inlet

Inlet

Inlet

Inlet

Inlet

A

A

PC: 250+34.17

PT: 255+30.21

END PROP. RIPRAP (CONC)(4 IN)
ITEM 432-2001

PORT CTB
(TY 1)

SITE 1 FOR RESET OF EXIST.
CRASH CUSHION ATTENUATORS
ITEM 545-2023

SITE 8
(MOUNT EXIST. SPEED LIMIT
SIGN TO CTB)

1069'

RELOCATE SPEED LIMIT SIGN
TO SITE 8
ITEM 644-2058

BEGIN PROP. RIPRAP (CONC)(4 IN)
ITEM 432-2001

FILE: US90A@HIRAMCLARKE*PLAN.DGN

© 2013 TxDOT

TEXAS DEPARTMENT OF TRANSPORTATION
HOUSTON DISTRICT

STATE OF TEXAS
BARBARA D. RUSSELL
100097
LICENSED
PROFESSIONAL ENGINEER

4.15.13

STORM WATER PREVENTION PLAN LAYOUT

SHEET 18 OF 18

SCALE	FED.RD. DIV.NO.	STATE	PROJECT NO.			HIGHWAY
1"=100'	6	TEXAS				US 90 A
REVISIONS	STATE DISTRICT	COUNTY	CONTROL	SECTION	JOB	SHEET NO.
	12	HARRIS	0027	09	099	75

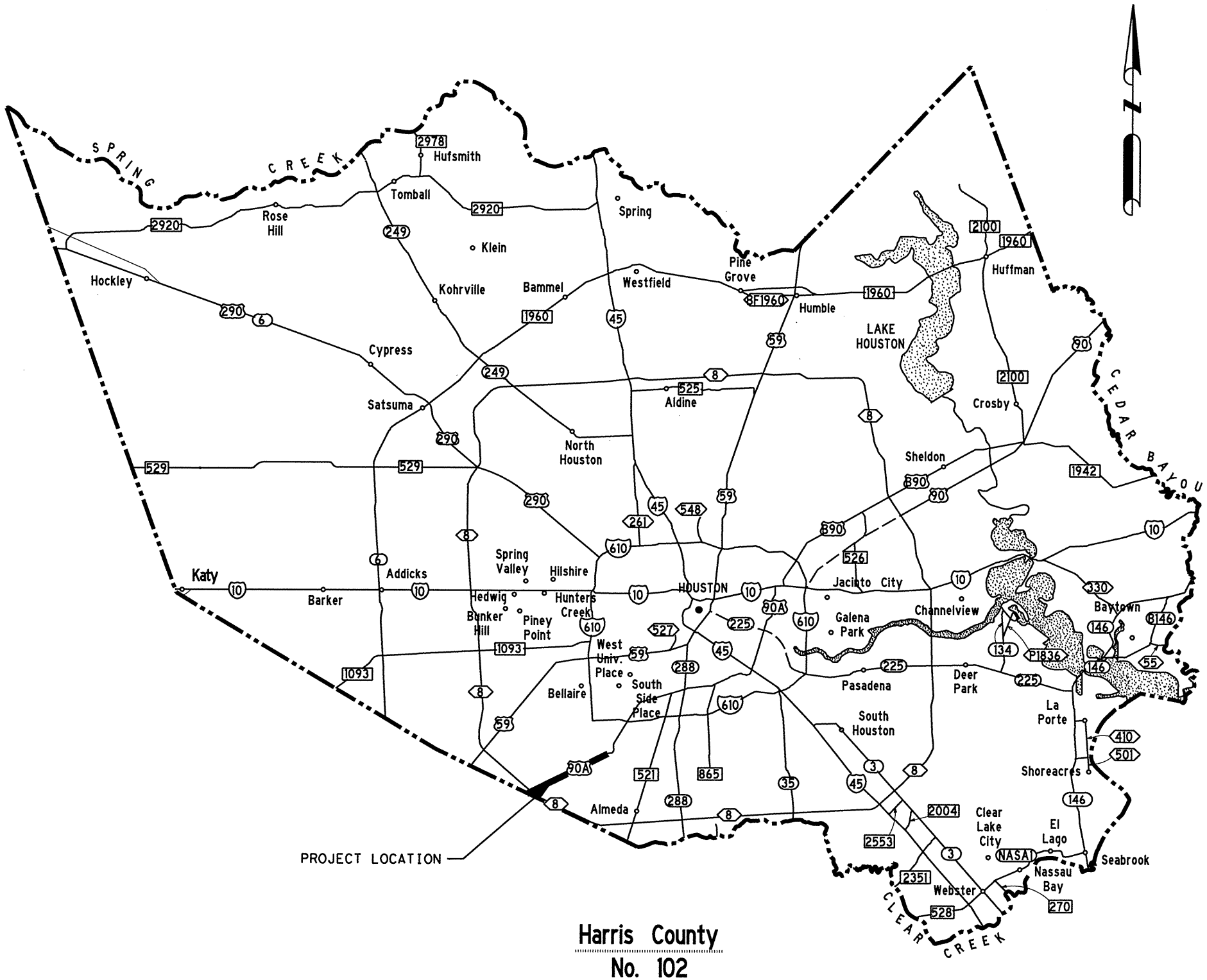

Harris County
No. 102

EDS.dgn REV 8-4-04 (1 of 3 sheets in file)

SCOPE OF WORK

INSTALL MEDIAN BARRIER, RIPRAP AND CRASH ATTENUATERS
REMOVE CURB MEDIAN

CONSTRUCTION METHODS:

____ FIELD CHECK SOUND WALL AS PANELS ARE PLACED
____ MONITOR NOISE LEVELS DURING EVENING HOURS
__X__ FLAGGING
__X__ FENCING
____ BERM
____ STAKING
____ MATS
____ COFFERDAMS
____ OTHER

SPECIAL WORK ZONES:

____ WILDLIFE MANAGEMENT ZONE
____ SEASONAL CONSTRUCTION WINDOW

DATES:_____

ADDRESSES:

U.S. FISH & WILDLIFE SERVICE
17629 EL CAMINO REAL SUITE 211
HOUSTON, TX. 77058
(281)286-8282

COMMANDER (OB)
EIGHTH COAST GUARD DISTRICT
HALE BOGGS FEDERAL BUILDINGS
500 POYDRAS
NEW ORLEANS. LA 70130

MR. FRED ANTHAMATTEN
U.S. ARMY CORPS OF ENGINEERS
GALVESTON DISTRICT, REGULATORY BRANCH
COMPLIANCE AND SPECIAL ACTIONS SECTION
PO BOX 1229
GALVESTON, TX 77553-1229

MS. SUSAN THEISS
TEXAS DEPARTMENT OF TRANSPORTATION
HOUSTON DISTRICT PROJECT DEVELOPMENT
P.O. BOX 1386
HOUSTON , TEXAS 77251-1386
TELEPHONE 713-802-5249
FAX 713-802-5350

Reviewed by: 4/15, 2013

Stanley Cooper
Project Environmental Coordinator

Reviewed by: 4/15, 2013

CP Hung
Environmental Supervisor

Texas Department of Transportation
Houston District

ENVIRONMENTAL PERMITS ISSUES AND COMMITMENTS

(EPIC)

FILE:	DN:	CK:	DW:	CK:	
© TxDOT 2012	DIST	FED REG	PROJECT NO.		SHEET
REVISIONS 6-12 TYPOS.	12	6			76
	COUNTY		CONTROL	SECT	JOB	HIGHWAY
	HARRIS		0027	09	099	US 90A

STD G2A

ENVIRONMENTAL ISSUES

ENDANGERED SPECIES/WILDLIFE:

DO NOT DISTURB OR HARM ENDANGERED SPECIES AND/OR THEIR HABITAT IF LISTED BELOW. VERIFY EXISTENCE OF HABITAT WITH AREA ENGINEER BEFORE CLEARING TREES.
MINIMIZE DISTURBANCE TO AREA WILDLIFE

[X] BRIDGE/CULVERT WORK REQUIRES INSPECTION FOR NESTING BIRDS BY ENV PERSONNEL PRIOR TO WORK

SPECIES IN PROJECT AREA	HABITAT	SPECIAL NOTES

COMMENTS

CULTURAL RESOURCES (HISTORICAL/ARCHEOLOGICAL):

KNOWN ITEMS OF HIST/ARCHEOLOGICAL INTEREST IN PROJECT AREA :

____ BUILDINGS
____ BRIDGES
____ CEMETERIES
____ ARCHEOLOGICAL SITES
____ HISTORIC MARKERS/PLAQUES
____ OTHER

IF ADDITIONAL HISTORICAL OR ARCHEOLOGICAL SITES ARE DISCOVERED DURING CONSTRUCTION IMMEDIATELY NOTIFY AREA ENGINEER AND THE DISTRICT ENVIRONMENTAL SECTION.

CULTURAL RESOURCE AREAS OF CONCERN

Station Number - Lt./Rt. (C/L or B/L)	Commitment/Avoidance

COMMENTS
NOT APPLICABLE

NOISE:

NOISE LEVELS IN RESIDENTIAL AREAS AND OTHER SENSITIVE AREAS SHOULD NOT EXCEED THE MAXIMUM ALLOWABLE FOR DAY/NIGHT AS SHOWN IN THE GENERAL NOTES OR AS DIRECTED BY THE ENGINEER, AVOID ROUTING OF CONSTRUCTION EQUIPMENT THROUGH RESIDENTIAL OR SENSITIVE AREAS IF LISTED BELOW.

COMMENTS

SOUNDWALLS:

DO NOT LEAVE GAPS BETWEEN PANELS OR POSTS IN NOISE WALLS. IF NEOPRENE PADS ARE REQUIRED, ENSURE THAT THEY ARE PLACED BETWEEN PANELS. DO NOT DAMAGE OR CAUSE EROSION TO ADJACENT PROPERTIES. ENSURE COLOR CONTINUITY FOR CONCRETE MIX THROUGHOUT CONSTRUCTION.

(IF APPLICABLE: If the project has proposed noise walls, leave in.)

COMMENTS
NOT APPLICABLE

WATER QUALITY:

- [X] REFER TO STORMWATER POLLUTION PREVENTION PLAN SHEET
- [X] MINIMIZE SEDIMENT RUNOFF
- [X] MINIMIZE POLLUTION
- [X] CONTAIN & PROPERLY DISPOSE OF POTENTIALLY HAZARDOUS SUBSTANCES.
- [X] ALL WORK SHOULD BE PERFORMED ACCORDING TO ALL APPLICABLE STATUTES.

COMMENTS
NOI NEEDED, USE BMP's FOR CONTROL OF SEDIMENT, EROSION, AND TOTAL SUSPENDED SOLIDS, ie SEDIMENTATION - SILT FENCE, EROSION - TEMPORARY VEGETATION OR SODDING, TOTAL SUSPENDED SOLIDS - VEGETATIVE FILTER STRIPS.

WETLANDS/WATERS OF U.S.:

NO FILLING, DREDGING OR EXCAVATING IN ANY WATERBODIES, RIVERS, CREEKS, STREAMS OR WET AREAS UNLESS SPECIFICALLY ALLOWED IN UNITED STATES CORPS OF ENGINEERS PERMIT OR APPROVED BY AREA ENGINEER. CONTRACTOR MUST OBTAIN ANY PERMIT FOR TEMPORARY FILL DUE TO CONSTRUCTION METHODS OTHER THAN THOSE SPECIFIED IN PLANS. CONTRACTOR MUST COORDINATE ANY PERMITS WITH THE TXDOT DISTRICT ENVIRONMENTAL SECTION. DO NOT REMOVE AND PLACE ANY FILL MATERIAL, CONSTRUCTION DEBRIS, ETC. ON ADJACENT OR OTHER PROPERTIES WITHOUT PRIOR PERMISSION OF AREA ENGINEER.

____ U.S. CORPS OF ENGINEERS PERMIT _____
____ U.S. COAST GUARD PERMIT _____
____ BRIDGE/WATERWAY LOCATION _____
____ KEEP BRIDGE CLEARANCE SAME AS EXISTING

CONTRACTOR MUST NOTIFY:

____ Must notify MS4 Operator(s) of discharges from this projet
____ U.S. COAST GUARD 30 DAYS PRIOR TO BEGINNING CONSTRUCTION
____ DISTRICT ENVIRONMENTAL SECTION PRIOR TO BEGINNING CONSTRUCTION
____ U.S. COAST GUARD 2 WEEKS PRIOR TO CHANNEL CLOSURES
____ U.S. COAST GUARD 1 WEEK PRIOR TO CHANNEL CLOSURES
____ U.S. COAST GUARD 48 HRS PRIOR TO CHANNEL CLOSURES

COMMENTS
NOT APPLICABLE

*See Plan Sheet(s)

VEGETATION:

LIMIT REMOVAL OF NATIVE VEGETATION WHEN POSSIBLE. NOTIFY TXDOT DISTRICT ENVIRONMENTAL SECTION 72 HOURS BEFORE REMOVAL OF TREES GREATER THAN 5"/120 mm DIAMETER THAT ARE NOT DESIGNATED ON PLANS. DO NOT REMOVE TREES NEXT TO RIVERS, CREEKS, OR STREAMS UNLESS APPROVED BY THE TXDOT DISTRICT ENVIRONMENTAL SECTION. FLAGGING SHALL BE USED BY CONTRACTOR TO DESIGNATE TREES TO BE REMOVED. APPROVAL FOR REMOVAL OF TREES SHALL BE OBTAINED BY DISTRICT ENVIRONMENTAL SECTION.

WOODY VEGETATION MUST BE INSPECTED FOR BIRD NESTS BY ENV PERSONNEL PRIOR TO REMOVAL BETWEEN MARCH 1 AND AUGUST 31.

VEGETATIVE AREAS OF CONCERN

Station Number - Lt./Rt. (C/L or B/L)	Commitment/Avoidance

COMMENTS
NOT APPLICABLE

BENEFICIAL LANDSCAPE PRACTICES/VEGETATION MANAGEMENT

- [X] MINIMIZE DISTURBANCE TO NATURAL AREAS
- [ ] RECYCLE TRIMMINGS W/LOCAL MUNICIPALITY RECYCLING PROGRAM
- [ ] REPLANT WITH NATIVE TREES/SHRUBS
- [X] MINIMIZE THE USE OF HERBICIDES, PESTICIDES AND FERTILIZERS
- [X] MAINTAIN SW3P STRUCTURES
- [ ] FIND LOCAL RECIPIENT FOR NATIVE PLANTS THAT CAN NOT BE REPLANTED ON-SITE

COMMENTS

HAZARDOUS MATERIAL:

- [ ] APPLICABLE TO PROPERTY
- [X] NOT APPLICABLE TO PROPERTY
- [ ] INSPECT BRIDGE/STRUCTURE FOR ASBESTOS PRIOR TO WORK/DEMOLITION

CONDUCT AND DOCUMENT ALL OF THE FOLLOWING:

CONDUCT SAFETY MEETING PRIOR TO CONSTRUCTION (MAKING WORKERS AWARE OF THE POTENTIAL HAZARDS THEY MAY ENCOUNTER);

READ AND FOLLOW THE HEALTH AND SAFETY PLAN AS SHOWN IN THE SPECIFICATIONS PRIOR TO CONSTRUCTION; AND

CONTACT/COORDINATE WITH THE APPROPRIATE AGENCY 7 TO 10 DAYS PRIOR TO CONSTRUCTION.

CONTACT AREA ENGINEER IF YOU DETECT:

DEAD OR DISTRESSED VEGETATION
TRASH PILES, DRUMS, CANISTERS, BARRELS, ETC.
UNDESIRABLE SMELLS OR ODORS
LEACHING OR SEEPAGE OF SUBSTANCES

HAZARDOUS MATERIAL AREAS OF CONCERN

Station Number - Lt./Rt. (C/L or B/L)	Commitment/Avoidance

COMMENTS

TRAFFIC CONTROL:

[X] CONSTRAINTS ON TRAFFIC CONTROL, SEE COMMENTS BELOW
SEE TRAFFIC CONTROL PLAN TCP(2-6)-98

The environmental document and the summary of environmental permits, issues and commitments have been reviewed for this project.

Reviewed by: 4.15, 2013
Barbara Russell, P.E.
Project Engineer

Reviewed by: 4/16, 2013
Stanley Cooper
Project Environmental Coordinator

Texas Department of Transportation
Houston District

ENVIRONMENTAL PERMITS ISSUES AND COMMITMENTS

(EPIC)

FILE:	DN:	CK:	DW:	CK:	
© TxDOT 2012	DIST	FED REG	PROJECT NO.		SHEET
REVISIONS 6-12 TYPOS.	12	6			77
	COUNTY		CONTROL	SECT	JOB	HIGHWAY
	HARRIS		0027	09	099	US 90A

STD G2B

EDS.dgn REV 8-4-04 (2 of 3 sheets in file)

This page intentionally left blank.